Engineering Simplicity

PTX1000 Packet Transport Router Hardware Guide

Published
2022-06-08

Juniper Networks, Inc.
1133 Innovation Way
Sunnyvale, California 94089
USA
408-745-2000
www.juniper.net

Juniper Networks, the Juniper Networks logo, Juniper, and Junos are registered trademarks of Juniper Networks, Inc. in the United States and other countries. All other trademarks, service marks, registered marks, or registered service marks are the property of their respective owners.

Juniper Networks assumes no responsibility for any inaccuracies in this document. Juniper Networks reserves the right to change, modify, transfer, or otherwise revise this publication without notice.

PTX1000 Packet Transport Router Hardware Guide
Copyright © 2022 Juniper Networks, Inc. All rights reserved.

The information in this document is current as of the date on the title page.

YEAR 2000 NOTICE

Juniper Networks hardware and software products are Year 2000 compliant. Junos OS has no known time-related limitations through the year 2038. However, the NTP application is known to have some difficulty in the year 2036.

END USER LICENSE AGREEMENT

The Juniper Networks product that is the subject of this technical documentation consists of (or is intended for use with) Juniper Networks software. Use of such software is subject to the terms and conditions of the End User License Agreement ("EULA") posted at https://support.juniper.net/support/eula/. By downloading, installing or using such software, you agree to the terms and conditions of that EULA.

Table of Contents

About This Guide | viii

1 Overview

PTX1000 System Overview | 2

- PTX1000 Packet Transport Router Description | 2
- PTX1000 Hardware Component Overview | 6
- PTX1000 Component Redundancy | 7
- PTX1000 Field-Replaceable Units | 7

PTX1000 Port Panel | 9

- PTX1000 Port Panel | 9
- PTX1000 Network Port LEDs | 17

PTX1000 Management Panel | 19

- PTX1000 Management Panel | 19
- PTX1000 Management Port LEDs | 21
- PTX1000 Chassis Status LEDs | 22

PTX1000 Cooling System | 24

- PTX1000 Cooling System Description | 24
- PTX1000 Fan Module LEDs | 26

PTX1000 Power System | 27

- PTX1000 AC Power Supply Description | 28
- PTX1000 DC Power Supply Description | 30
- PTX1000 Power Supply LEDs | 31
- PTX1000 AC Power Specifications | 33
- PTX1000 AC Power Cord Specifications | 34
- PTX1000 DC Power Specifications | 35

PTX1000 DC Power Cable Specifications | 36

2 Site Planning, Preparation, and Specifications

PTX1000 Site Preparation Checklist | 39

PTX1000 Site Guidelines and Requirements | 41

PTX1000 Environmental Requirements and Specifications | 41

General Site Guidelines | 42

PTX1000 Chassis Grounding Cable and Lug Specifications | 43

PTX1000 Clearance Requirements for Airflow and Hardware Maintenance | 44

PTX1000 Physical Specifications | 45

Site Electrical Wiring Guidelines | 45

PTX1000 Rack Requirements | 46

PTX1000 Network Cable and Transceiver Planning | 48

Determining Transceiver Support for the PTX1000 | 48

Cable and Connector Specifications for MX and PTX Series Devices | 50

Fiber-Optic Cable Signal Loss, Attenuation, and Dispersion | 57

Calculating Power Budget and Power Margin for Fiber-Optic Cables | 59

How to Calculate Power Budget for Fiber-Optic Cables | 59

How to Calculate Power Margin for Fiber-Optic Cables | 59

PTX1000 Management Cable Specifications and Pinouts | 61

Cable Specifications for Console and Management Connections for the PTX1000 | 61

Management Port Connector Pinouts for the PTX1000 | 62

Console Port Connector Pinouts for the PTX1000 | 63

USB Port Specifications for the PTX1000 | 64

3 Initial Installation and Configuration

PTX1000 Installation Overview | 66

Overview of Installing the PTX1000 | 66

PTX1000 Installation Safety Guidelines | 67

Unpacking and Mounting the PTX1000 | 68

Unpacking the PTX1000 | **68**

Mounting the PTX1000 in a Rack | **69**

Before You Begin Mounting the PTX1000 | **70**

Mounting the PTX1000 | **71**

Connecting the PTX1000 to Power | 73

Connecting the PTX1000 to Ground | **73**

Connecting AC Power to the PTX1000 | **75**

Connecting DC Power to the PTX1000 | **78**

Connecting the PTX1000 to External Devices | 83

Connecting the PTX1000 to a Management Ethernet Device | **83**

Connecting the PTX1000 to a Management Console | **84**

Performing the Initial Software Configuration for the PTX1000 | 86

Powering Off the PTX1000 | 88

4 **Maintaining Components**

Maintaining the PTX1000 Fan Modules | 92

Removing a Fan Module from the PTX1000 | **92**

Installing a Fan Module in the PTX1000 | **93**

Maintaining the PTX1000 Power Supplies | 94

Removing a Power Supply from the PTX1000 | **95**

Installing a Power Supply in a PTX1000 | **96**

Maintaining the PTX1000 Transceivers and Fiber-Optic Cables | 98

Removing a Transceiver from the PTX1000 | **98**

Installing a Transceiver in the PTX1000 | **100**

Disconnecting a Fiber-Optic Cable from the PTX1000 | **101**

Connecting a Fiber-Optic Cable to the PTX1000 | **102**

Maintaining Fiber-Optic Cables in a PTX1000 | **103**

Uninstalling the PTX1000 | 104

5 Troubleshooting Hardware

Troubleshooting the PTX1000 | 107

PTX1000 Troubleshooting Resources Overview | 107

PTX1000 Alarm Messages Overview | 108

Chassis Alarm Messages on the PTX1000 | 108

6 Returning the Chassis or Components

Returning the PTX1000 Chassis or Components | 114

Locating the Serial Number on a PTX1000 Chassis or Component | 114

Listing the Chassis and Component Details by Using the CLI | 115

Locating the Chassis Serial Number ID Label on a PTX1000 | 116

Locating the Serial Number ID Labels on FRU Components | 116

Contact Customer Support to Obtain Return Material Authorization | 116

Packing a PTX1000 Chassis or Component for Shipping | 117

Packing a PTX1000 for Shipping | 118

Packing PTX1000 Components for Shipping | 118

7 Safety and Compliance Information

PTX1000 General Electrical Safety Guidelines and Warnings | 121

Definitions of Safety Warning Levels | 122

Qualified Personnel Warning | 124

Warning Statement for Norway and Sweden | 124

Fire Safety Requirements | 125

Installation Instructions Warning | 126

Chassis and Component Lifting Guidelines | 127

Restricted Access Warning | 127

Ramp Warning | 129

Rack-Mounting and Cabinet-Mounting Warnings | 129

Grounded Equipment Warning | 133

Radiation from Open Port Apertures Warning | 134

Laser and LED Safety Guidelines and Warnings | 135

Maintenance and Operational Safety Guidelines and Warnings | 138

Action to Take After an Electrical Accident | 144

Prevention of Electrostatic Discharge Damage | 144

AC Power Electrical Safety Guidelines | 145

AC Power Disconnection Warning | 146

PTX1000 DC Power Electrical Safety Guidelines | 147

DC Power Copper Conductors Warning | 148

DC Power Disconnection Warning | 148

DC Power Grounding Requirements and Warning | 150

DC Power Wiring Sequence Warning | 151

DC Power Wiring Terminations Warning | 152

Multiple Power Supplies Disconnection Warning | 154

TN Power Warning | 154

PTX1000 Agency Approvals and Compliance Statements | 155

- PTX1000 Agency Approvals | **156**
- Compliance Statements for EMC Requirements | **157**
- Compliance Statements for Environmental Requirements | **158**
- PTX1000 Compliance Statements for Acoustic Noise | **158**

PTX1000 Compliance Statements for Acoustic Noise | 159

About This Guide

Use this guide to install hardware and perform initial software configuration, routine maintenance, and troubleshooting for the PTX1000 Packet Transport Router.

After completing the installation and basic configuration procedures covered in this guide, refer to the Junos OS documentation for information about further software configuration.

RELATED DOCUMENTATION

PTX1000 Quick Start

1

CHAPTER

Overview

PTX1000 System Overview | 2

PTX1000 Port Panel | 9

PTX1000 Management Panel | 19

PTX1000 Cooling System | 24

PTX1000 Power System | 27

PTX1000 System Overview

IN THIS SECTION

- PTX1000 Packet Transport Router Description | 2
- PTX1000 Hardware Component Overview | 6
- PTX1000 Component Redundancy | 7
- PTX1000 Field-Replaceable Units | 7

PTX1000 Packet Transport Router Description

IN THIS SECTION

- Benefits of the PTX1000 Router | 3
- Port Panel and Management Panel | 4
- FRU Panel | 5

The Juniper Networks PTX1000 Packet Transport Router is a fixed-configuration router that supports 10-Gbps, 40-Gbps, and 100-Gbps port speeds in a compact 2U form factor, enabling service providers to organically distribute peering points throughout the network.

The system architecture cleanly separates control operations from packet forwarding operations. This design eliminates processing and traffic bottlenecks, permitting the PTX1000 to achieve high performance.

- Control operations are performed by the Routing Engine, which runs the Juniper Networks Junos operating system (Junos OS). The Routing Engine handles routing protocols, traffic engineering, policy, policing, monitoring, and configuration management. Junos OS is installed on the PTX1000 router's internal 2 x 64-gigabyte (GB) M.2 SATA solid-state drives (SSDs). The 64-GB SSDs have 50 GB of usable space—the remaining space is reserved. The Routing Engine is enhanced by a 2.5-GHz quad core Intel CPU and 32 GB of SDRAM.

> **NOTE**: The 2 x 64-GB SSDs installed in the PTX1000 support the `request vmhost snapshot` command, which creates a recovery snapshot of the currently running and active file system partitions, and `request vmhost snapshot recovery` command, which recovers the primary disk from the snapshot content stored in the backup disk. In addition, the 64-GB SSDs support enhanced hardware resiliency through storage partitioning and redundancy.
>
> Earlier versions of the PTX1000 have 2 x 32-GB M.2 SATA SSDs. PTX1000 routers with 32-GB SSDs do not support the `request vmhost snapshot` and `request vmhost snapshot recovery` commands, and do not support enhanced hardware resiliency. To determine the size of the SSDs installed in your device, issue the `show vmhost hardware` CLI command. The capacity of `Disk1` and `Disk2` is displayed in the output as `32.0 GB` if 32-GB SSDs are installed, and the capacity is displayed as `50.0 GB` if 64-GB SSDs are installed. See the Junos OS Software Installation and Upgrade Guide for more information.

- Forwarding operations are performed by the Packet Forwarding Engines, which include ASICs designed by Juniper Networks. The custom ExpressPlus ASICs enable the PTX1000 to provide up to 2.88 terabits per second (Tbps) of forwarding capacity. The ExpressPlus ASICs are connected to Hybrid Memory Cubes (HMCs). These high-efficiency memory modules provide packet buffering, virtual output queue (VOQ) memory, and improved logical system scale.

> **TIP**: For information about features supported on PTX Series routers, see Feature Explorer.

Benefits of the PTX1000 Router

- Increased scalability—The PTX1000 scales to 3 Tbps in a single chassis, supporting up to 288 10-Gigabit Ethernet interfaces, 72 40-Gigabit Ethernet interfaces, and 24 100-Gigabit Ethernet interfaces, giving service providers the performance and scalability needed as networks grow. The purpose-built ASICs in the PTX1000 provide enhanced packet processing for both full IP functionality and MPLS transport, accommodating scale as traffic continues to increase and optimizing IP/MPLS transit functionality.

- Space efficiency—Providing high capacity in a compact 2U form-factor, the PTX1000 meets installation needs for peering Internet exchange points, peering collocations, central offices, and regional networks, especially in emerging markets.

- Always-on infrastructure base—The PTX1000 is engineered with full hardware redundancy for cooling, power supplies, and forwarding, allowing service providers to meet stringent service-level agreements across the core.

Port Panel and Management Panel

The port panel of the PTX1000 contains 72 network ports and port LEDs. The management panel of the PTX1000 contains console and management ports, a reset button, system status LEDs, clocking ports, and a USB port. Figure 1 on page 4 shows the PTX1000 port panel and management panel.

Figure 1: PTX1000 Port Panel and Management Panel

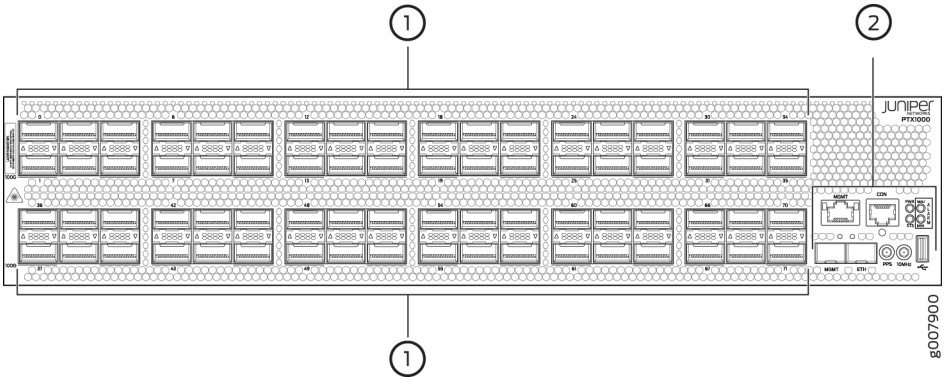

1– Port panel	2– Management panel

Each of the 72 network ports on the port panel supports quad small form-factor pluggable plus (QSFP+) transceivers, and is configured as a channelized 4 x 10-Gigabit Ethernet interface by default (for a maximum of 288 10-Gigabit Ethernet ports). You can configure each of the 72 ports as a 40-Gigabit Ethernet interface. You can also configure 24 of the 72 network ports as 100-Gigabit Ethernet interfaces. Table 1 on page 4 describes the maximum number of ports for each interface type supported by the PTX1000.

Table 1: Maximum Supported Ports at Each Interface Speed

Interface Type	Maximum Supported Ports
10-Gigabit Ethernet	288
40-Gigabit Ethernet	72
100-Gigabit Ethernet	24

> **NOTE**: You can purchase a licensed model of the PTX1000 that allows you to use 18 of the 72 network ports. You can use 18 ports in any combination, for a maximum of 72 10-Gigabit Ethernet interfaces, 18 40-Gigabit Ethernet interfaces, or 6 100-Gigabit Ethernet interfaces. You can purchase additional licenses to enable the remaining network ports. Each license enables an additional 18 of the 72 total network ports.

You manage the PTX1000 by using the Junos OS CLI, which is accessible through the console and out-of-band management ports on the management panel. In addition, the management panel has system status LEDs that alert you to minor or major alarms or other issues with the router, external clock synchronization ports, and a USB port to support software installation and recovery.

For more information about the port and management panels, see "PTX1000 Port Panel " on page 9 and "PTX1000 Management Panel" on page 19.

FRU Panel

The field-replaceable unit (FRU) panel of the PTX1000 contains the fan modules and power supplies for the PTX1000. Figure 2 on page 5 shows the PTX1000 FRU panel.

Figure 2: PTX1000 FRU Panel

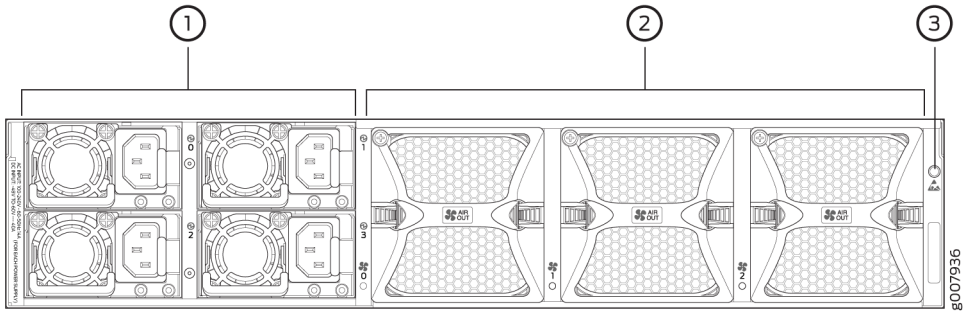

1– Power supplies (4)	3– ESD point
2– Fan modules (3)	

The cooling system in a PTX1000 consists of three 80-W fan modules that operate at 150 cubic feet per minute (CFM) at full speed as well as fans housed in the power supplies. Each fan module has dual counter-rotating fans. These fan modules can be hot-swapped—you do not need to power off the router or disrupt routing function to replace a fan module.

In the PTX1000 cooling system, cool air enters through the vents in the port panel and hot air exhausts through the FRU panel. This type of airflow is known as *airflow out* or *port-to-FRU airflow*.

The PTX1000 has four 1600-W power supplies, either AC or DC depending on your configuration. Each power supply provides 12-VDC output with a standby voltage of 12 VDC. The power supplies can be hot-swapped—you do not need to power off the router or disrupt routing function to replace a power supply

For more information about the components on the FRU panel, see "PTX1000 Cooling System Description" on page 24, "PTX1000 AC Power Supply Description" on page 28, and "PTX1000 DC Power Supply Description" on page 30.

SEE ALSO

> *request vmhost snapshot*
>
> *show vmhost hardware*

PTX1000 Hardware Component Overview

The PTX1000 supports the components in Table 2 on page 6 listed in alphabetic order. See "PTX1000 Physical Specifications" on page 45 for the dimensions and weight of the PTX1000.

Table 2: PTX1000 Hardware Components

Component	Spare Juniper Model Number	CLI Output	Description
Chassis	PTX1000-72Q-CHAS-S	`PTX1000`	"PTX1000 Packet Transport Router Description" on page 2
Fan module	PTX1000-FAN-S	`PTX1000 Fan Tray`	"PTX1000 Cooling System Description" on page 24
Power supplies	JPSU-1600W-AC-AFO	`AC AFO 1600W PSU`	"PTX1000 AC Power Supply Description" on page 28
	JPSU-1600W-DC-AFO	`DC AFO 1600W PSU`	"PTX1000 DC Power Supply Description" on page 30

PTX1000 Component Redundancy

The following hardware components provide redundancy on PTX1000 models:

- Cooling system—The PTX1000 has three fan modules. Each fan module is a redundant unit containing two fans. If a fan module fails and the remaining fan modules are unable to keep the PTX1000 within the desired temperature thresholds, chassis alarms are raised and the PTX1000 might shut down.

- Power supplies—The PTX1000 is shipped with four power supplies. A PTX1000 provides for twice the number of power supplies needed to power all the components in the router, which is known as *2N redundancy*. If one power supply fails or is removed, the remaining power supplies balance the electrical load without interruption and still provide *N* + 1 redundancy while the failing power supply is replaced.

  For power feed redundancy, connect power source feed A to power supplies **0** and **1** and connect power source feed B to power supplies **2** and **3**. A single feed can provide power to all components in the PTX1000.

  > **CAUTION**: Do not connect feed A and feed B to the same power supply input terminal.

PTX1000 Field-Replaceable Units

Field-replaceable units (FRUs) are components that you can replace at your site. The PTX1000 FRUs are hot-removable and hot-insertable—you can remove and replace them without powering off the PTX1000 or disrupting the routing function.

> **CAUTION**: Replace a failed fan module with a new fan module within 30 seconds of removal to prevent chassis overheating.

Table 3 on page 8 lists the FRUs for the PTX1000 and actions to take before removing them.

Table 3: Required Actions Before Removing a FRU from the PTX1000

FRU	Required Actions Before Removal
Power supplies (4)	Remove the power cord or cable for the power supply unit. **NOTE**: You need a minimum of two powered power supplies for the PTX1000 to operate properly.
Fan modules (3)	None.
Optical transceivers	None. We recommend that you disable the interface by using the **set interfaces *interface-name* disable** command before you remove the transceiver. See "Disconnecting a Fiber-Optic Cable from the PTX1000" on page 101.

See Figure 3 on page 8 for the location of the power supplies and fan modules on the FRU panel of the PTX1000.

Figure 3: FRUs on the FRU Panel in a PTX1000

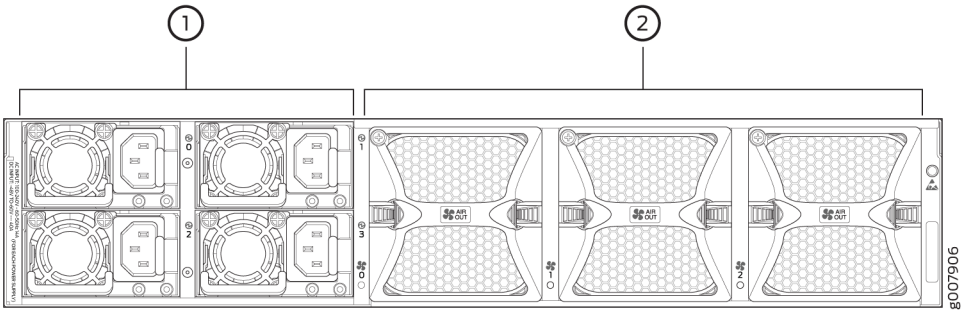

1– Power supplies (4)	2– Fan modules (3)

NOTE: If you have a Juniper Care service contract, register any addition, change, or upgrade of hardware components at https://www.juniper.net/customers/support/tools/updateinstallbase/ . Failure to do so can result in significant delays if you need replacement parts. This note does not apply if you replace existing components with the same type of component.

PTX1000 Port Panel

IN THIS SECTION

- PTX1000 Port Panel | 9
- PTX1000 Network Port LEDs | 17

PTX1000 Port Panel

IN THIS SECTION

- Example: Using Network Ports as 40-Gigabit Ethernet Interfaces | 10
- Example: Using Network Ports as 100-Gigabit Ethernet Interfaces | 11
- PTX1000 Port Mapping | 12

The PTX1000 supports 10-Gbps, 40-Gbps, and 100-Gbps port speeds. Figure 4 on page 9 shows the PTX1000 port panel and management panel.

Figure 4: PTX1000 Port Panel and Management Panel

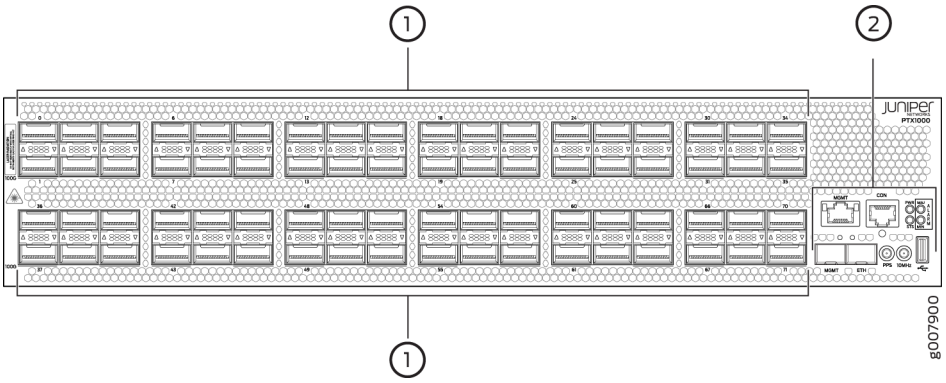

1– Port panel	2– Management panel

Each of the 72 network ports on the port panel supports quad small form-factor pluggable plus (QSFP+) transceivers. By default, the network ports operate as channelized 4 x 10-Gigabit Ethernet interfaces—using QSFP+ to SFP+ fiber breakout cables—for a maximum of 288 10-Gigabit Ethernet ports. You can configure each of the 72 ports as a 40-Gigabit Ethernet interface, in groups of three ports—when you configure the first port in a port group to operate at 40 Gbps, that port and the next two ports operate at 40 Gbps. You can also configure 24 of the 72 network ports as 100-Gigabit Ethernet interfaces. The 24 network ports that can be configured as 100-Gigabit Ethernet interfaces support QSFP28 transceivers.

NOTE: Network ports that can be configured as 100-Gigabit Ethernet interfaces are marked with a fine black line underneath the transceiver socket. When the port is configured as a 100-Gigabit Ethernet interface, the two adjacent ports are disabled. For example, port `1` supports 100-Gbps port speed. When you configure the port as a 100-Gigabit Ethernet interface, port `0` and port `2` are disabled.

NOTE: Port speeds are configured using the `set chassis fpc 0 pic 0 port` *`port-number`* `speed` *`speed`* command. You configure ports to operate at 40 Gbps by using the `40g` speed option. You configure ports to operate at 100 Gbps by using the `100g` speed option. If you configure a port to operate at 40 Gbps or 100 Gbps, and you want to return the port to the default configuration, delete the `speed` statement from the configuration at the `[chassis fpc 0 pic 0 port` *`port-number`*`]` hierarchy level and commit the configuration. The network port is reset to the default 4 x 10-Gigabit Ethernet interface. Table 4 on page 12 shows the available combinations for the network ports on the PTX1000.

Example: Using Network Ports as 40-Gigabit Ethernet Interfaces

All network ports on the PTX1000 can be configured as 40-Gigabit Ethernet interfaces. You must configure 40-Gigabit Ethernet interfaces in groups of three network ports. When the port speed is configured as 40 Gbps on the first port in a port group, all three ports in the port group operate at 40 Gbps. For example, if you configure port `0` as a 40-Gigabit Ethernet inteface, ports `1` and `2` are also 40-

Gigabit Ethernet interfaces (see Figure 5 on page 11). Table 4 on page 12 provides the complete list of port groups that can be configured as 40-Gigabit Ethernet interfaces.

Figure 5: 40-Gigabit Ethernet Interface Configuration Uses Three Network Ports

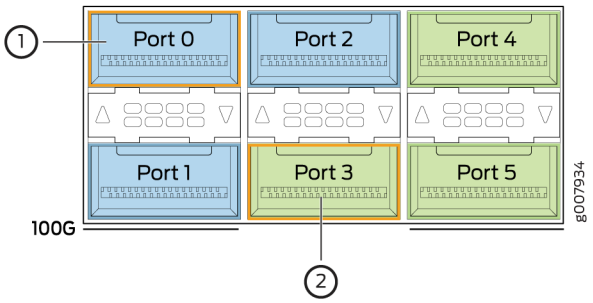

1– When port **0** is configured to operate at 40 Gbps, ports **1** and **2** also operate at 40 Gbps (in blue).

2– When port **3** is configured to operate at 40 Gbps, ports **4** and **5** also operate at 40 Gbps (in green).

NOTE: 40-Gigabit Ethernet interfaces are configured using the `set chassis fpc 0 pic 0 port` *`port-number`* `speed` *`speed`* command. For example, to configure the first set of three network ports as 40-Gigabit Ethernet interfaces, use the `set chassis fpc 0 pic 0 port 0 speed 40g` command. After you commit this configuration, each of the three ports (`0`, `1`, and `2`) operate at 40 Gbps.

Example: Using Network Ports as 100-Gigabit Ethernet Interfaces

Starting with port `1`, every second and sixth port in each group of six network ports can be configured as 100-Gigabit Ethernet interfaces. Figure 6 on page 11 shows the 100-Gigabit Ethernet-capable ports in a group of six network ports, designated by a fine black line underneath the port.

Figure 6: 100-Gigabit Ethernet Ports Indicated by a Black Line Underneath the Port

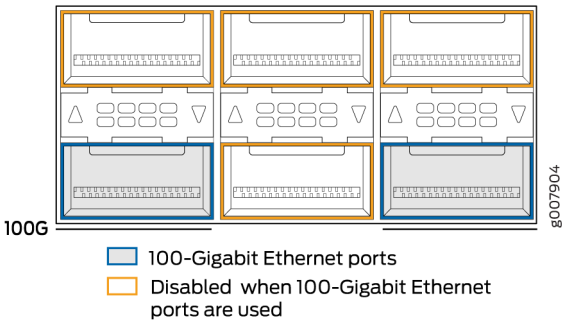

When the port speed is configured as 100 Gbps in the CLI, Junos OS disables two associated network ports from that port group. For example, if you configure port `1` as a 100-Gigabit Ethernet interface, ports `0` and `2` are disabled (see Figure 7 on page 12). Table 4 on page 12 provides the complete list of ports that can be configured to operate as 100-Gigabit Ethernet interfaces, and the corresponding ports that are disabled.

Figure 7: 100-Gigabit Ethernet Interface Configuration Disables Two Associated Ports

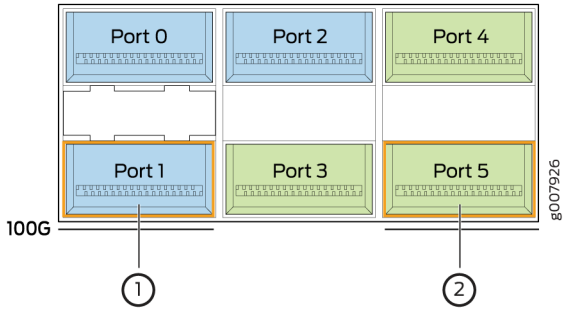

1– Configuring port **1** as a 100-Gigabit Ethernet interface causes ports **0** and **2** to be disabled (in blue).

2– Configuring port **5** as a 100-Gigabit Ethernet interface causes ports **3** and **4** to be disabled (in green).

NOTE: 100-Gigabit Ethernet interfaces are configured using the `set chassis fpc 0 pic 0 port` *`port-number`* `speed` *`speed`* command. For example, to configure port `1`—the first 100-Gigabit Ethernet-capable port—use the `set chassis fpc 0 pic 0 port 1 speed 100g` command. After you commit this configuration, port `1` operates at 100 Gbps, while ports `0` and `2` are disabled.

PTX1000 Port Mapping

Table 4 on page 12 shows the available combinations for the network ports on the PTX1000.

Table 4: PTX1000 Port Mapping

Port Number	4 x 10-Gigabit Ethernet Channelized Ports (Default)	40-Gigabit Ethernet Port Groups	100-Gigabit Ethernet Ports	Ports Disabled When a 100-Gigabit Ethernet Interface Is Configured
0	✓	✓	–	–

Table 4: PTX1000 Port Mapping *(Continued)*

Port Number	4 x 10-Gigabit Ethernet Channelized Ports (Default)	40-Gigabit Ethernet Port Groups	100-Gigabit Ethernet Ports	Ports Disabled When a 100-Gigabit Ethernet Interface Is Configured
1	✓		✓	0, 2
2	✓		–	–
3	✓	✓	–	–
4	✓		–	–
5	✓		✓	3, 4
6	✓	✓	–	–
7	✓		✓	6, 8
8	✓		–	–
9	✓	✓	–	–
10	✓		–	–
11	✓		✓	9, 10
12	✓	✓	–	–
13	✓		✓	12, 14
14	✓		–	–
15	✓	✓	–	–

Table 4: PTX1000 Port Mapping *(Continued)*

Port Number	4 x 10-Gigabit Ethernet Channelized Ports (Default)	40-Gigabit Ethernet Port Groups	100-Gigabit Ethernet Ports	Ports Disabled When a 100-Gigabit Ethernet Interface Is Configured
16	✓		–	–
17	✓		✓	15, 16
18	✓	✓	–	–
19	✓		✓	18, 20
20	✓		–	–
21	✓	✓	–	–
22	✓		–	–
23	✓		✓	21, 22
24	✓	✓	–	–
25	✓		✓	24, 26
26	✓		–	–
27	✓	✓	–	–
28	✓		–	–
29	✓		✓	27, 28
30	✓	✓	–	–

Table 4: PTX1000 Port Mapping *(Continued)*

Port Number	4 x 10-Gigabit Ethernet Channelized Ports (Default)	40-Gigabit Ethernet Port Groups	100-Gigabit Ethernet Ports	Ports Disabled When a 100-Gigabit Ethernet Interface Is Configured
31	✓		✓	30, 32
32	✓		–	–
33	✓	✓	–	–
34	✓		–	–
35	✓		✓	33, 34
36	✓	✓	–	–
37	✓		✓	36, 38
38	✓		–	–
39	✓	✓	–	–
40	✓		–	–
41	✓		✓	39, 40
42	✓	✓	–	–
43	✓		✓	42, 44
44	✓		–	–
45	✓	✓	–	–

Table 4: PTX1000 Port Mapping *(Continued)*

Port Number	4 x 10-Gigabit Ethernet Channelized Ports (Default)	40-Gigabit Ethernet Port Groups	100-Gigabit Ethernet Ports	Ports Disabled When a 100-Gigabit Ethernet Interface Is Configured
46	✓		–	–
47	✓		✓	45, 46
48	✓	✓	–	–
49	✓		✓	48, 50
50	✓		–	–
51	✓	✓	–	–
52	✓		–	–
53	✓		✓	51, 52
54	✓	✓	–	–
55	✓		✓	54, 56
56	✓		–	–
57	✓	✓	–	–
58	✓		–	–
59	✓		✓	57, 58
60	✓	✓	–	–

Table 4: PTX1000 Port Mapping *(Continued)*

Port Number	4 x 10-Gigabit Ethernet Channelized Ports (Default)	40-Gigabit Ethernet Port Groups	100-Gigabit Ethernet Ports	Ports Disabled When a 100-Gigabit Ethernet Interface Is Configured
61	✓		✓	60, 62
62	✓		–	–
63	✓	✓	–	–
64	✓		–	–
65	✓		✓	63, 64
66	✓	✓	–	–
67	✓		✓	66, 68
68	✓		–	–
69	✓	✓	–	–
70	✓		–	–
71	✓		✓	69, 70

PTX1000 Network Port LEDs

Each PTX1000 network port uses a single bicolored LED to indicate link status and activity. The triangular LEDs are located between the top row and bottom row of ports. The LEDs are shaped so that

each LED points to the port with which it is associated. Figure 8 on page 18 shows the location of the LEDs.

Figure 8: Network Port LEDs on a PTX1000

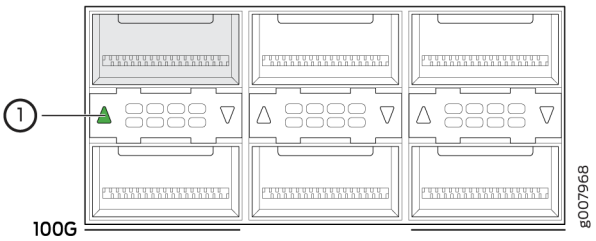

1– LED for shaded network port (top left)

NOTE: The same bicolored LED also indicates status when the port is configured to operate as four 10-Gigabit Ethernet interfaces.

Table 5 on page 18 describes the network port LEDs.

Table 5: PTX1000 Network Port LEDs

Color	State	Description
Unlit	Off	The port is administratively disabled, there is no power, the link is down, or a transceiver is not present.
Green	On steadily	A link is established.
	Blinking	The beacon function was enabled on the port.
Amber	On steadily	When the port is configured to operate as four 10-Gigabit Ethernet interfaces, indicates that one or more interfaces (but not all four) are up.
	Blinking	There are one or more errors on the connections.

PTX1000 Management Panel

IN THIS SECTION

- PTX1000 Management Panel | 19
- PTX1000 Management Port LEDs | 21
- PTX1000 Chassis Status LEDs | 22

PTX1000 Management Panel

The PTX1000 management panel is found next to the port panel (see Figure 9 on page 19).

Figure 9: PTX1000 Port Panel and Management Panel

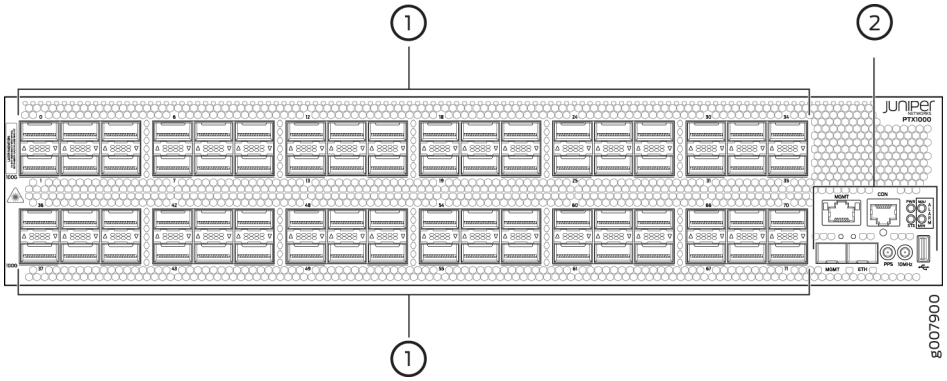

1– Port panel	2– Management panel

You manage the PTX1000 by using the Junos OS CLI, which is accessible through the console and out-of-band management ports on the management panel. In addition, the management panel has system status LEDs that alert you to minor or major alarms or other issues with the router, external clock

synchronization ports, and a USB port to support software installation and recovery. Figure 10 on page 20 shows the management panel in detail.

Figure 10: PTX1000 Management Panel Components

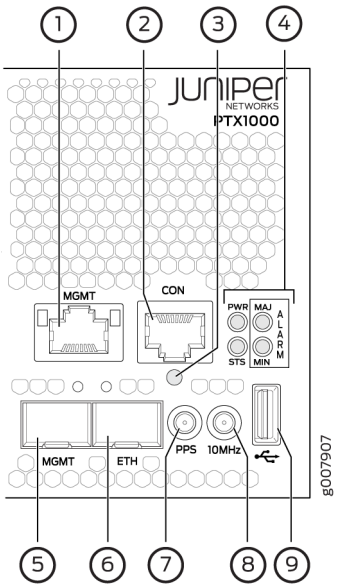

1– RJ-45 (1000BASE-T) management Ethernet port (labeled **MGMT**). In the Junos OS CLI, this port is identified as `em0`.	6– SFP PTP Ethernet (1000BASE-T) port (labeled **ETH**). Port reserved for future use.
2– RJ-45 console port (**CON**) to support RS-232 serial ports.	7– 10 Hz pulses-per-second (**PPS**) SubMiniature B (SMB) connector for input and output measuring of the timing drift to and from a grandmaster clock. Port reserved for future use.
3– Reset button. Press and hold 5 seconds to reset the hardware. Clock functions and FPGA status registers are not reset.	8– 10 MHz SMB timing connector (**10MHz**). Port reserved for future use.
4– Status LEDs—Power (**PWR**), status (**STS**), major alarm (**MAJ**), and minor alarm (**MIN**).	9– USB port.
5– SFP management Ethernet port (labeled **MGMT**). In the Junos OS CLI, this port is identified as `em2`.	

PTX1000 Management Port LEDs

There are two management ports on the PTX1000, located on the management panel next to the network ports. Both ports are labeled **MGMT**. The RJ-45 management port is for 10/100/1000BASE-T connections and the small form-factor pluggable (SFP) management port is for 10/100/1000BASE-T and 1000BASE-X connections.

The RJ-45 port has separate LEDs for status and activity. The SFP port has a LED to indicate both link and activity. Figure 11 on page 21 shows the location of the LEDs.

Figure 11: Management Port LEDs on a PTX1000

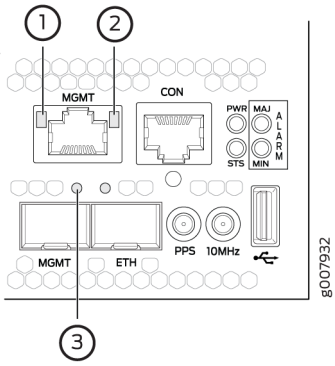

1– Status LED (RJ-45)	3– Link activity LED (SFP)
2– Link activity LED (RJ-45)	

Table 6 on page 21 describes the RJ-45 management port LEDs.

Table 6: PTX1000 RJ-45 Management Port LEDs

LED	Color	State	Description
Link activity	Unlit	Off	No link is established, there is a fault, or the link is down.
	Amber	Blinking or flickering	A link is established, and there is link activity.
Status	Unlit	Off	Either the port speed is 10 Mbps or the link is down.
	Green	On steadily	The port speed is 1000 Mbps.

Table 7 on page 22 describes the SFP management port LED.

Table 7: PTX1000 SFP Management Port LED

LED	Color	State	Description
Link activity	Unlit	Off	No link is established, there is a fault, or the link is down.
	Green	On steadily	A link is established, but there is no link activity.
		Blinking or flickering	A link is established, and there is link activity.

PTX1000 Chassis Status LEDs

The PTX1000 has four status LEDs on the management panel of the chassis, next to the network ports (see Figure 12 on page 22).

Figure 12: Chassis Status LEDs on a PTX1000

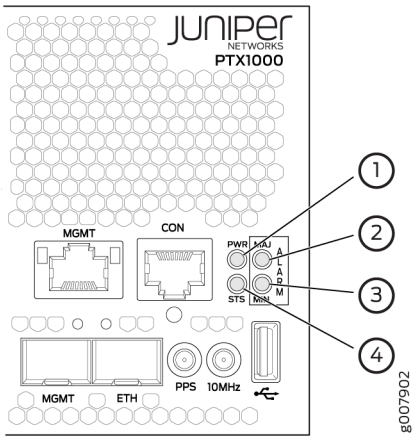

1– Power (**PWR**) LED	3– Minor alarm (**MIN**) LED
2– Major alarm (**MAJ**) LED	4– Status (**STS**) LED

Table 8 on page 23 describes the chassis status LEDs on a PTX1000.

Table 8: PTX1000 Chassis Status LEDs

Name	Color	State	Description
Power (**PWR**)	Unlit	Off	The PTX1000 is powered off— there is no power to the device.
	Green	On steadily	The power system is working correctly.
	Amber	Blinking	There is a problem with the power system. Power off the PTX1000 by setting the AC power source outlet to the off (**O**) position or by unplugging the AC power cords. Correct any voltage issues. Power on the PTX1000 and monitor the power supply and fan LEDs to help determine where the error is occurring. If there is a CPU power failure, the PTX1000 does not boot.
Status (**STS**) LED	Unlit	Off	The PTX1000 is powered off or Junos OS is halted.
	Green	On steadily	Junos OS has booted.
	Amber	Blinking	The PTX1000 detects a fault.
Major alarm (**MAJ**) LED	Unlit	Off	There are no major alarms.
	Red	On steadily	A major hardware fault has occurred, such as a temperature alarm or power failure, and the PTX1000 has halted.
Minor alarm (**MIN**) LED	Unlit	Off	There are no minor alarms.
	Amber	On steadily	A minor alarm has occurred, such as a software error.

PTX1000 Cooling System

IN THIS SECTION

- PTX1000 Cooling System Description | 24
- PTX1000 Fan Module LEDs | 26

PTX1000 Cooling System Description

IN THIS SECTION

- Fan Modules | 24
- Airflow Through the Chassis | 25

Fan Modules

The cooling system in a PTX1000 consists of three 80-W fan modules that operate at 150 cubic feet per minute (CFM) at full speed as well as fans housed in the power supplies. Each fan module has dual counter-rotating fans. Figure 13 on page 24 shows the fan module for the PTX1000.

Figure 13: PTX1000 Fan Module

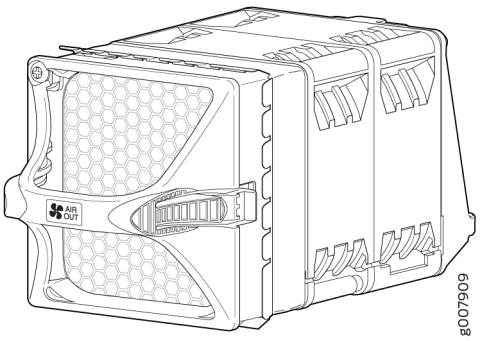

The fan modules in a PTX1000 are hot-removable and hot-insertable FRUs. The fan module slots are numbered **0** through **2** from left to right when viewing the chassis from the FRU side (see Figure 14 on page 25). Each fan module slot has a fan icon and LED next to it.

Figure 14: PTX1000 FRU Panel

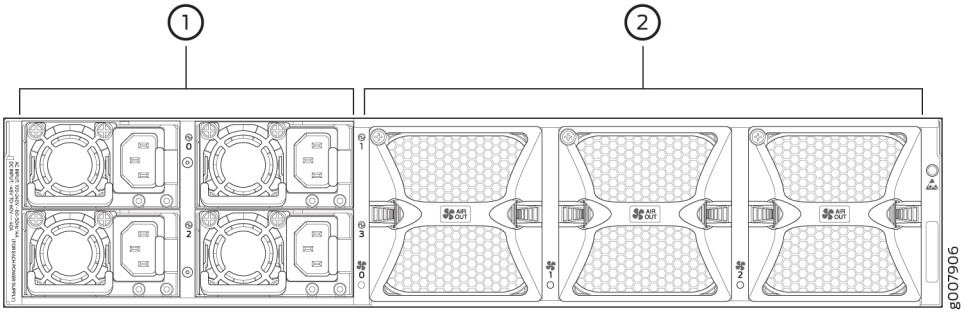

1– Power supplies (4)	2– Fan modules (3)

> **NOTE**: All three fan modules must be installed for optimal operation of the PTX1000. The PTX1000 continues to operate for a limited period of time (30 seconds) during the replacement of the fan module without thermal shutdown.

Airflow Through the Chassis

In the PTX1000 cooling system, cool air enters through the vents in the port panel and hot air exhausts through the FRU panel. This type of airflow is known as *airflow out* or *port-to-FRU* airflow. When the

chassis is installed, it must be positioned so that the FRUs are next to the *hot aisle*. Figure 15 on page 26 shows the airflow through the chassis.

Figure 15: Airflow Through the PTX1000 Chassis (Port-to-FRU)

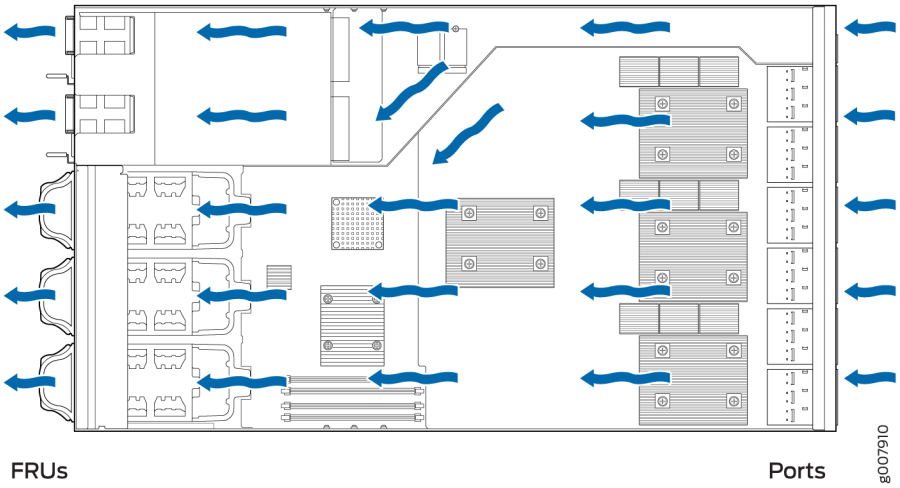

NOTE: Under normal operating conditions, the fan modules operate at a moderate speed. Temperature sensors in the chassis monitor the temperature within the chassis. The system raises an alarm if a fan module fails or if the ambient temperature inside the chassis rises above the acceptable range. If the temperature inside the chassis rises above the threshold temperature, the system shuts down automatically.

PTX1000 Fan Module LEDs

The PTX1000 has status LEDs for each fan module on the left side of the corresponding fan module slot. Figure 16 on page 27 shows the location of the LED next to the fan module on the PTX1000 FRU panel.

TIP: You can check the status of fan modules by using the `show system alarms` command.

Figure 16: Fan Module LEDs on a PTX1000

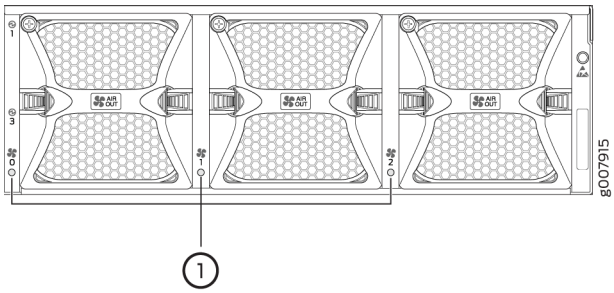

1– Status LEDs	

Use Table 9 on page 27 to interpret the state of the fan module LED.

Table 9: PTX1000 Fan Module LED

Name	Color	State	Description
Status	Green	On steadily	The fan module is operating normally. The system has verified that the module is engaged, and that the fan is operating correctly.
	Amber	On steadily	An error is detected in the fan module. Replace the fan module as soon as possible. Either the fan has failed or it is seated incorrectly. To maintain proper airflow through the chassis, leave the fan module installed in the chassis until you are ready to replace it.

PTX1000 Power System

IN THIS SECTION

PTX1000 AC Power Supply Description | 28

- PTX1000 DC Power Supply Description | 30
- PTX1000 Power Supply LEDs | 31
- PTX1000 AC Power Specifications | 33
- PTX1000 AC Power Cord Specifications | 34
- PTX1000 DC Power Specifications | 35
- PTX1000 DC Power Cable Specifications | 36

PTX1000 AC Power Supply Description

The AC power supplies in the PTX1000 (see Figure 17 on page 28 and Figure 18 on page 29) are hot-removable, and hot-insertable field-replaceable units (FRUs) that you can install without powering off the router or disrupting the routing function. The PTX1000 has four power supplies.

> **CAUTION**: Do not mix AC and DC power supplies in the same chassis.

Figure 17: PTX1000 FRU Panel

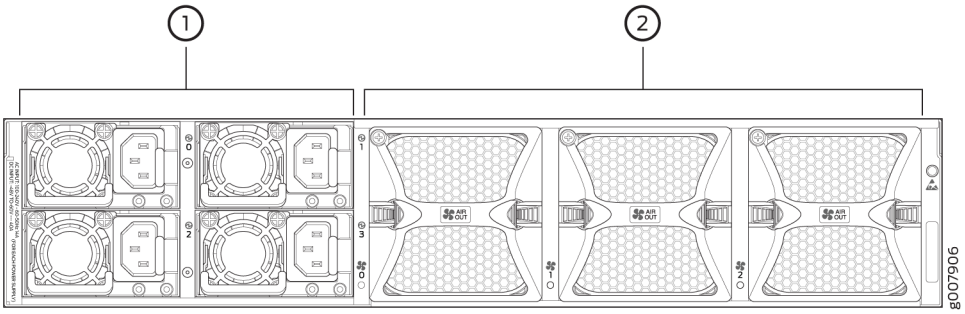

1– Power supplies (4)	2– Fan modules (3)

Figure 18: AC Power Supply in a PTX1000

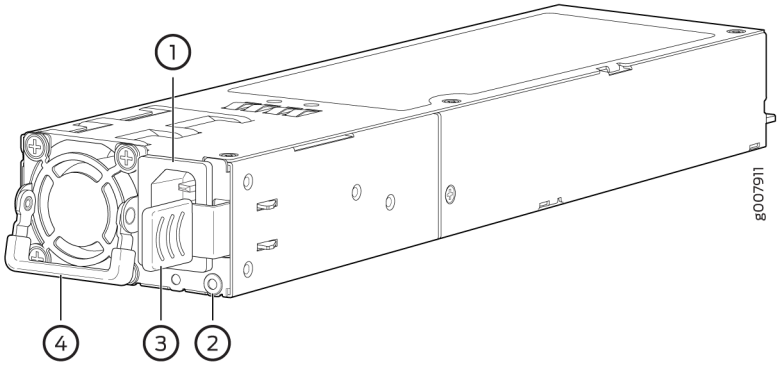

1– Plug power connector	3– Ejector lever
2– Status LED	4– Handle

Each of the 1600-W power supplies has a single AC input. The power supply provides 12-VDC output with a standby voltage of 12 VDC. A PTX1000 provides for twice the number of power supplies needed to power all of the components in the device, which is known as *2N redundancy*. When the PTX1000 has all four power supplies installed and connected to power, the router has full power redundancy. If a power supply fails or is removed, another power supply balances the electrical load without interruption.

The fan in the power supply provides port-to-FRU airflow, which is also known as *airflow out (AFO)*. A power supply with the label **AFO** or a gold-colored handle denotes port-to-FRU airflow.

CAUTION: To avoid electrical injury, carefully follow instructions in "Connecting AC Power to the PTX1000" on page 75, "Installing a Power Supply in a PTX1000" on page 96, and "Removing a Power Supply from the PTX1000" on page 95.

NOTE: For more information about power system redundancy, see "PTX1000 Component Redundancy" on page 7.

PTX1000 DC Power Supply Description

The DC power supplies in the PTX1000 (see Figure 19 on page 30 and Figure 20 on page 30) are hot-removable and hot-insertable field-replaceable units (FRUs) that you can install without powering off the router or disrupting the routing function. The PTX1000 has four power supplies.

> **CAUTION**: Do not mix AC and DC power supplies in the same chassis.

Figure 19: PTX1000 FRU Panel

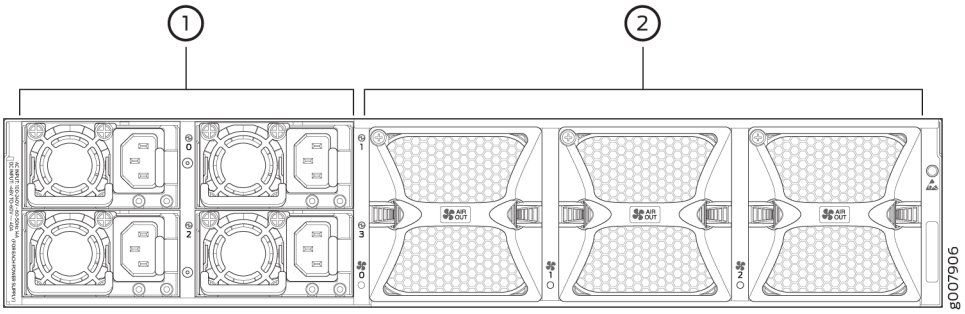

1– Power supplies (4)	2– Fan modules (3)

Figure 20: DC Power Supply in a PTX1000

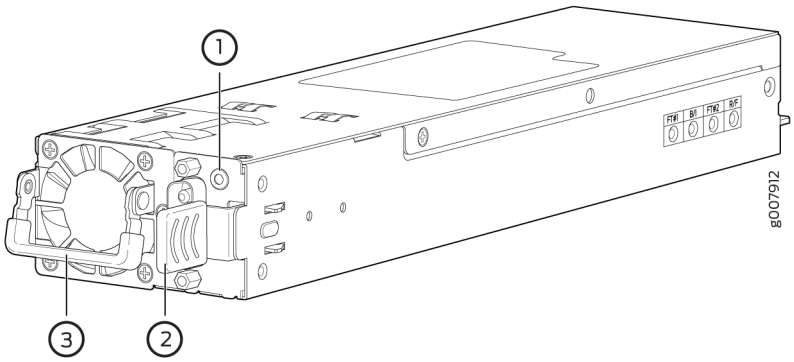

1– Status LED	3– Handle
2– Ejector lever	

Each of the four 1600-W power supplies has a single DC input. The power supply provides 12-VDC output with a standby voltage of 12 VDC. A PTX1000 provides for twice the number of power supplies needed to power all of the components in the router, which is known as *2N redundancy*. When the

PTX1000 has all four power supplies installed and connected to power, the router has full power redundancy. If a power supply fails or is removed, another power supply balances the electrical load without interruption.

The fan in the power supply provides port-to-FRU airflow, which is also known as *airflow out (AFO)*. A power supply with the label **AFO** or a gold-colored handle denotes port-to-FRU airflow.

CAUTION: To avoid electrical injury, carefully follow instructions in "Connecting DC Power to the PTX1000" on page 78, "Installing a Power Supply in a PTX1000" on page 96, and "Removing a Power Supply from the PTX1000" on page 95.

NOTE: We recommend that the 48-VDC facility DC source be equipped with a circuit breaker rated at 40 A (–48 VDC) minimum, or as required by local code.

NOTE: For more information about power system redundancy, see "PTX1000 Component Redundancy" on page 7.

PTX1000 Power Supply LEDs

Each PTX1000 power supply has a status LED on the power supply faceplate. Figure 21 on page 31 shows the location of the LED on a PTX1000 AC power supply and Figure 22 on page 32 shows the location of the LED on a PTX1000 DC power supply.

Figure 21: AC Power Supply LED on a PTX1000

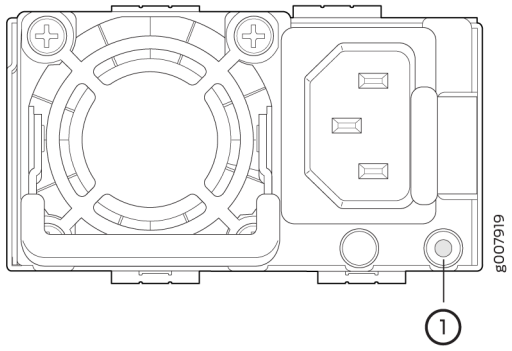

1– Status LED	

Figure 22: DC Power Supply LED on a PTX1000

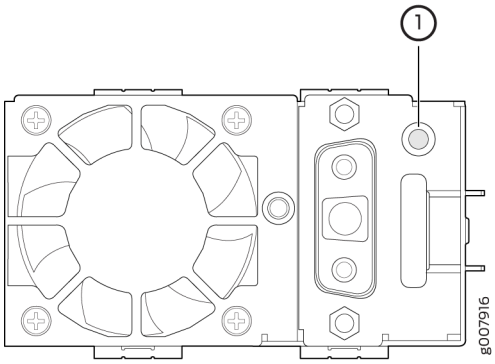

1– Status LED	

Use Table 10 on page 32 to interpret the state of the power supply LED.

Table 10: PTX1000 Power Supply LED

Name	Color	State	Description
Status	Unlit	Off	There is no power to any of the power supplies.
	Green	On steadily	The power supply is on and operating correctly.
		Slow blinking (1 Hz)	The power supply is in cold standby mode; only the 12 VDC input is present.
		Blinking (2 Hz)	The power supply is uploading firmware.

Table 10: PTX1000 Power Supply LED *(Continued)*

Name	Color	State	Description
	Amber	On steadily	Either the power cord is unplugged or a major error is detected in the power supply. Examples of a major error are power supply failure, overvoltage protection error, overcurrent protection error, a fan failure. • If the power cord is unplugged or missing, reattach the power cord appropriate for your country. • If a major error is occurring, replace the power supply as soon as possible. To maintain proper airflow through the chassis, leave the power supply installed in the chassis until you are ready to replace it.
		Blinking	Warning events are being detected; the power supply continues to operate. Often these events are because of rising temperatures. Check the fan modules and the fans in the power supplies and ensure there is proper airflow through the chassis.

PTX1000 AC Power Specifications

Table 11 on page 33 describes the AC power specifications for a PTX1000.

Table 11: PTX1000 AC Power Specifications

Item	Specifications
AC input voltage	Operating range: 100–240 VAC
AC input line frequency	50–60 Hz
AC input current rating	14 A at 100–120 VAC
Typical power consumption	1050 W
Maximum power consumption	1425 W

PTX1000 AC Power Cord Specifications

Detachable AC power cords are shipped with the chassis if you include them as part of your order. The coupler is type C13 as described by International Electrotechnical Commission (IEC) standard 60320. The plug end of the power cord fits into the power source outlet that is standard for your geographical location.

> **NOTE**: In North America, AC power cords must not exceed 14.75 feet (approximately 4.5 meters) in length, to comply with National Electrical Code (NEC) Sections 400-8 (NFPA 75, 5-2.2) and 210-52 and Canadian Electrical Code (CEC) Section 4-010(3). The cords that can be ordered for the PTX1000 are in compliance.

Table 12 on page 34 lists AC power cord specifications provided for each country or region.

Table 12: PTX1000 AC Power Cord Specifications

Country/Region	Electrical Specifications	Plug Standards	Juniper Model Number	Graphic
Australia	250 VAC, 10 A, 50 Hz	AS/NZ 3109-1996	CBL-EX-PWR-C13-AU	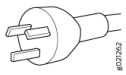
China	250 VAC, 10 A, 50 Hz	GB 1002-1996	CBL-EX-PWR-C13-CH	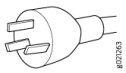
Europe (except Italy, Switzerland, and United Kingdom)	250 VAC, 10 A, 50 Hz	CEE (7) VII	CBL-EX-PWR-C13-EU	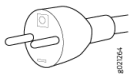
Italy	250 VAC, 10 A, 50 Hz	CEI 23-16/VII	CBL-EX-PWR-C13-IT	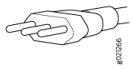
Japan	125 VAC, 12 A, 50 Hz or 60 Hz	JIS C8303	CBL-EX-PWR-C13-JP	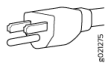

Table 12: PTX1000 AC Power Cord Specifications *(Continued)*

Country/Region	Electrical Specifications	Plug Standards	Juniper Model Number	Graphic
North America	125 VAC, 13 A, 60 Hz	CAN/CSA No. 49-92	CBL-EX-PWR-C13-US	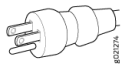
South Korea	250 VAC, 10 A, 60 Hz	KSC 8305; K60884-1	CBL-EX-PWR-C13-KR	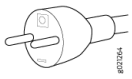
Switzerland	250 VAC, 10 A, 50 Hz	SEV 1011 SEV 1991; EN 60320 C13	CBL-EX-PWR-C13-SZ	
United Kingdom	250 VAC, 10 A, 50 Hz	BS 1363/A	CBL-EX-PWR-C13-UK	

PTX1000 DC Power Specifications

Table 13 on page 35 describes the DC power specifications for a PTX1000.

> **NOTE**: We recommend that the 48-VDC facility DC source be equipped with a circuit breaker rated at 40 A (–48 VDC) minimum, or as required by local code.

Table 13: PTX1000 DC Power Specifications

Item	Specifications
DC input voltage	• Rated operating voltage: –48 VDC through –60 VDC • Operating voltage range: –40 VDC through –72 VDC

Table 13: PTX1000 DC Power Specifications *(Continued)*

Item	Specifications
DC input current rating	40 A maximum
Typical power consumption	1050 W
Maximum power consumption	1425 W

PTX1000 DC Power Cable Specifications

PTX1000 DC power supplies require a D-Sub 3W3- type connector. The three pins on the connector provide –48 VDC input (–), return (+), and ground connections to the power supply.

> **NOTE**: The optional right-angle DC power cables, CBL-JNP-PWR-DSUB2 and CBL-JNP-PWR-DSUB3, do not include a ground connection wire.
>
> Regardless which DC power cable you use, you must connect the PTX1000 to earth ground before you connect it to to power, using the procedure described in "Connecting the PTX1000 to Ground" on page 73.

DC power cables, each approximately 13.1 ft (4 m) long, are supplied with the PTX1000. The provided cables include the three-pin connector on one end and insulated wires at the opposite end, for connection to the site's DC power distribution system.

Table 14 on page 36 lists the specifications for the PTX1000 DC power cables.

Table 14: PTX1000 DC Power Cable Specifications

Juniper Model Number	Wire Function	Insulation Color	Wire Size
CBL-JNP-PWR-DSUB (straight cable)	–48 VDC input (–)	Blue	8 AWG (8.4 mm^2), 90° C
	Return (+)	Black	8 AWG (8.4 mm^2), 90° C

Table 14: PTX1000 DC Power Cable Specifications *(Continued)*

Juniper Model Number	Wire Function	Insulation Color	Wire Size
	Ground	Green and yellow	8 AWG (8.4 mm^2), 90° C
CBL-JNP-PWR-DSUB2 (right-angle cable)	–48 VDC input (–)	Blue	8 AWG (8.4 mm^2), 90° C
	Return (+)	Black	8 AWG (8.4 mm^2), 90° C
CBL-JNP-PWR-DSUB3 (FT4 vertical-flame rated, right-angle cable)	–48 VDC input (–)	Gray	8 AWG (8.4 mm^2), 90° C
	Return (+)	Gray	8 AWG (8.4 mm^2), 90° C

WARNING: For field-wiring connections, use copper conductors only.

WARNING: Power cables must not block access to PTX1000 components or drape where people could trip over them.

CAUTION: You must ensure that power connections maintain the proper polarity. The power source cables might be labeled **(+)** and **(–)** to indicate their polarity. There is no standard color coding for DC power cables. The color coding used by the external DC power source at your site might be different from the color coding for the leads on the DC power cable provided with the chassis.

2

CHAPTER

Site Planning, Preparation, and Specifications

PTX1000 Site Preparation Checklist | 39

PTX1000 Site Guidelines and Requirements | 41

PTX1000 Network Cable and Transceiver Planning | 48

PTX1000 Management Cable Specifications and Pinouts | 61

PTX1000 Site Preparation Checklist

The checklist in Table 15 on page 39 summarizes the tasks you need to perform when preparing a site for a PTX1000 installation.

Table 15: Site Preparation Checklist

Item or Task	For More Information	Performed by	Date
Environment			
Verify that environmental factors such as temperature and humidity do not exceed router tolerances.	"PTX1000 Environmental Requirements and Specifications" on page 41		
Power			
Measure the distance between external power sources and the router installation site.			
Calculate the power consumption and requirements.	• "PTX1000 AC Power Specifications" on page 33 • "PTX1000 DC Power Specifications" on page 35		
Rack			
Verify that your rack meets the minimum requirements for the installation of the router.	"PTX1000 Rack Requirements" on page 46		

Table 15: Site Preparation Checklist *(Continued)*

Item or Task	For More Information	Performed by	Date
Plan rack location, including required space clearances.	"PTX1000 Clearance Requirements for Airflow and Hardware Maintenance" on page 44		
Secure the rack to the floor and building structure.			
Cables			
Acquire cables and connectors: • Determine the number of cables needed based on your planned configuration. • Review the maximum distance allowed for each cable. Choose the length of cable based on the distance between the hardware components being connected.	• "Determining Transceiver Support for the PTX1000" on page 48 • "Cable and Connector Specifications for MX and PTX Series Devices" on page 50		
Plan the cable routing and management.			

RELATED DOCUMENTATION

PTX1000 Installation Safety Guidelines | 67

Chassis and Component Lifting Guidelines

PTX1000 Site Guidelines and Requirements

IN THIS SECTION

- PTX1000 Environmental Requirements and Specifications | 41
- General Site Guidelines | 42
- PTX1000 Chassis Grounding Cable and Lug Specifications | 43
- PTX1000 Clearance Requirements for Airflow and Hardware Maintenance | 44
- PTX1000 Physical Specifications | 45
- Site Electrical Wiring Guidelines | 45
- PTX1000 Rack Requirements | 46

PTX1000 Environmental Requirements and Specifications

The PTX1000 must be installed in a rack. It must be housed in a dry, clean, well-ventilated, and temperature-controlled environment.

Follow these environmental guidelines:

- The site must be as dust-free as possible, because dust can clog air intake vents and filters, reducing the efficiency of the PTX1000 cooling system.
- Maintain ambient airflow for normal PTX1000 operation. If the airflow is blocked or restricted, or if the intake air is too warm, the chassis might overheat, leading to the PTX1000 temperature monitor shutting down the router to protect the hardware components.

Table 16 on page 41 provides the required environmental conditions for normal PTX1000 operation.

Table 16: PTX1000 Environmental Tolerances

Description	Tolerance
Altitude	No performance degradation up to 6000 feet (1828.8 meters).

Table 16: PTX1000 Environmental Tolerances *(Continued)*

Description	Tolerance
Relative humidity	• Normal operation ensured in relative humidity range of 5% through 90%, noncondensing.
Temperature	• Normal operation ensured in temperature range of 32° F (0° C) through 104° F (40° C). • Nonoperating storage temperature in shipping container: –40° F (–40° C) through 158° F (70° C).
Seismic	Designed to comply with Zone 4 earthquake requirements.

NOTE: Install the PTX1000 only in restricted areas, such as dedicated equipment rooms and equipment closets, in accordance with Articles 110-16, 110-17, and 110-18 of the National Electrical Code, ANSI/NFPA 70.

SEE ALSO

PTX1000 Site Preparation Checklist | **39**

General Site Guidelines

Efficient device operation requires proper site planning and maintenance and proper layout of the equipment, rack or cabinet, and wiring closet.

To plan and create an acceptable operating environment for your device and prevent environmentally caused equipment failures:

- Keep the area around the chassis free from dust and conductive material, such as metal flakes.
- Follow prescribed airflow guidelines to ensure that the cooling system functions properly and that exhaust from other equipment does not blow into the intake vents of the device.
- Follow the prescribed electrostatic discharge (ESD) prevention procedures to prevent damaging the equipment. Static discharge can cause components to fail completely or intermittently over time.

- Install the device in a secure area, so that only authorized personnel can access the device.

PTX1000 Chassis Grounding Cable and Lug Specifications

For installations that require a separate grounding conductor to the chassis, the PTX1000 must be adequately grounded before power is connected to ensure proper operation and to meet safety and electromagnetic interference (EMI) requirements. To ground a PTX1000, connect a grounding cable to earth ground and then attach it to the chassis grounding points.

WARNING: The device is a pluggable type A equipment installed in a restricted-access location. It has a separate protective earthing terminal provided on the chassis in addition to the grounding pin of the power supply cord. This separate protective earthing terminal must be permanently connected to earth ground for installations that require a separate grounding conductor to the chassis.

WARNING: To comply with GR-1089 requirements, all intrabuilding copper cabling used for SFP+, QSFP+, and QSFP28 ports must be shielded and grounded at both ends.

CAUTION: Before device installation begins, a licensed electrician must attach a cable lug to the grounding cables that you supply. See "Connecting the PTX1000 to Ground" on page 73. A cable with an incorrectly attached lug can damage the PTX1000.

Before connecting the PTX1000 to earth ground, review the following information:

- A protective earthing terminal bracket is required for connecting the PTX1000 to earth ground. This two-holed bracket attaches on the side of the PTX1000 chassis through the mounting rail and provides a protective earthing terminal for the device. The grounding points require two #10-32 UNF screws and washers. The grounding points are spaced at 0.63 in. (16 mm).
- The grounding lug required is a Panduit LCC8-14A-L or equivalent (provided). The grounding lug accommodates 8 AWG (8.4 mm^2) stranded wire.
- The grounding cable that you provide must be of the same size or heavier than the input wire of each power supply. The minimum recommendation is 8 AWG (8.4 mm^2) stranded wire, 60° C wire, or as permitted by local code.

SEE ALSO

Connecting AC Power to the PTX1000 | 75

Connecting DC Power to the PTX1000 | 78

PTX1000 Clearance Requirements for Airflow and Hardware Maintenance

When planning the site for a PTX1000 installation, you must allow sufficient clearance around the installed chassis (see Figure 23 on page 44).

Figure 23: Clearance Requirements for Airflow and Hardware Maintenance for a PTX1000

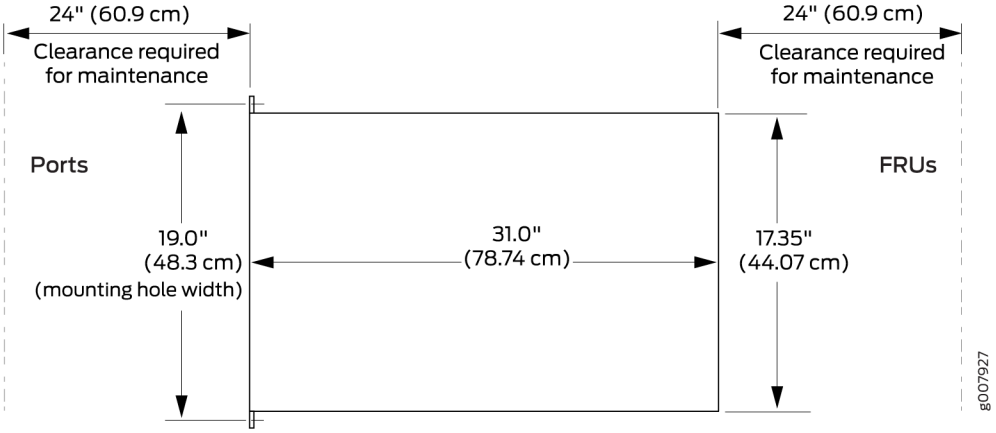

Follow these guidelines:

- For the cooling system to function properly, the airflow around the chassis must be unrestricted. See "PTX1000 Cooling System Description" on page 24 for more information about the airflow through the chassis.
- If you are mounting a PTX1000 in a rack with other equipment, ensure that the exhaust from other equipment does not blow into the intake vents of the chassis.
- You must leave at least 24 in. (61 cm) both in front of and behind the PTX1000 for service personnel to remove and install hardware components, you must leave adequate space at the front and back of the PTX1000.

PTX1000 Physical Specifications

Table 17 on page 45 lists the physical specifications for the PTX1000 chassis.

Table 17: Physical Specifications for the PTX1000

Description	Weight	Height	Width	Depth
AC-powered chassis	With field-replaceable units (FRUs) installed: 68.6 lb (31.1 kg)	3.46 in. (8.8 cm)	17.35 in. (44.07 cm)	31 in. (78.7 cm) without handles for fans or power supplies.
DC-powered chassis	With FRUs installed: 67.8 lb (30.8 kg)			

Site Electrical Wiring Guidelines

Table 18 on page 46 describes the factors you must consider while planning the electrical wiring at your site.

WARNING: You must provide a properly grounded and shielded environment and use electrical surge-suppression devices.

Avertissement Vous devez établir un environnement protégé et convenablement mis à la terre et utiliser des dispositifs de parasurtension.

Table 18: Site Electrical Wiring Guidelines

Site Wiring Factor	Guidelines
Signaling limitations	If your site experiences any of the following problems, consult experts in electrical surge suppression and shielding: • Improperly installed wires cause radio frequency interference (RFI). • Damage from lightning strikes occurs when wires exceed recommended distances or pass between buildings. • Electromagnetic pulses (EMPs) caused by lightning damage unshielded conductors and electronic devices.
Radio frequency interference	To reduce or eliminate RFI from your site wiring, do the following: • Use a twisted-pair cable with a good distribution of grounding conductors. • If you must exceed the recommended distances, use a high-quality twisted-pair cable with one ground conductor for each data signal, when applicable.
Electromagnetic compatibility	If your site is susceptible to problems with electromagnetic compatibility (EMC), particularly from lightning or radio transmitters, seek expert advice. Some of the problems caused by strong sources of electromagnetic interference (EMI) are: • Destruction of the signal drivers and receivers in the device • Electrical hazards as a result of power surges conducted over the lines into the equipment

PTX1000 Rack Requirements

The PTX1000 chassis is designed to be installed in four-post racks.

Rack requirements consist of:

- Rack type
- Mounting bracket hole spacing
- Rack size and strength

Table 19 on page 47 provides the rack requirements and specifications for the PTX1000.

Table 19: Rack Requirements for the PTX1000

Rack Requirement	Guidelines
Rack type: four-post	Use a four-post rack that provides bracket holes or hole patterns spaced at 1-U (1.75 in. or 4.45 cm) increments and that meets the size and strength requirements to support the weight. A U is the standard rack unit defined in *Cabinets, Racks, Panels, and Associated Equipment* (document number EIA-310–D) published by the Electronics Components Industry Association (http://www.ecianow.org/).
Mounting bracket hole spacing	The holes in the mounting brackets are spaced at 1 U (1.75 in. or 4.45 cm), so that the PTX1000 can be mounted in any rack that provides holes spaced at that distance.
Rack size and strength	• Ensure that the rack complies with the standards for a 19-in. or 23-in. rack as defined in *Cabinets, Racks, Panels, and Associated Equipment* (document number EIA-310–D) published by the Electronics Components Industry Association (http://www.ecianow.org/). • Use a 600-mm rack as defined in the four-part *Equipment Engineering (EE); European telecommunications standard for equipment practice* (document numbers ETS 300 119-1 through 119-4) published by the European Telecommunications Standards Institute (http://www.etsi.org). The horizontal spacing between the rails in a rack that complies with this standard is usually wider than the router's mounting brackets, which measure 19 in. (48.26 cm) from outer edge to outer edge. Use approved wing devices to narrow the opening between the rails as required. • Ensure that the rack rails are spaced widely enough to accommodate the PTX1000 chassis' external dimensions. The outer edges of the front-mounting rails extend the width to 19 in. (48.26 cm). • Ensure that the front and rear rack rails are spaced between 28 in. (71.1 cm) and 36 in. (91.4 cm) front-to-back. • Ensure that the rack is strong enough to support the weight of the PTX1000. • Ensure that the spacing of rails and adjacent racks allows for proper clearance around the PTX1000 and rack.

Table 19: Rack Requirements for the PTX1000 ***(Continued)***

Rack Requirement	Guidelines
Rack connection to building structure	• Secure the rack to the building structure. • If earthquakes are a possibility in your geographical area, secure the rack to the floor. • Secure the rack to the ceiling brackets as well as wall or floor brackets for maximum stability.

PTX1000 Network Cable and Transceiver Planning

IN THIS SECTION

- Determining Transceiver Support for the PTX1000 | **48**
- Cable and Connector Specifications for MX and PTX Series Devices | **50**
- Fiber-Optic Cable Signal Loss, Attenuation, and Dispersion | **57**
- Calculating Power Budget and Power Margin for Fiber-Optic Cables | **59**

Determining Transceiver Support for the PTX1000

The PTX1000 has 72 network ports. Each of the 72 network ports on the port panel supports quad small form-factor pluggable plus (QSFP+) transceivers, and is configured as a channelized 4 x 10-Gigabit Ethernet interface by default (for a maximum of 288 10-Gigabit Ethernet ports). You can configure each of the 72 ports as a 40-Gigabit Ethernet interface. You can also configure 24 of the 72 network ports as 100-Gigabit Ethernet interfaces—these ports support QSFP28 transceivers for 100-Gbps speeds. See "PTX1000 Port Panel " on page 9 for more information about the network ports.

NOTE: By default, the Junos OS software running on the PTX1000 automatically enables or disables RS-FEC for 100-Gigabit Ethernet transceivers based on the type of transceiver installed.

You can explicitly enable or disable RS-FEC for a port by using the `edit interfaces` *`interface-name`* `gigether-options fec` statement. See *fec (gigether)* for more information.

The network ports on the PTX1000 support QSFP+ and QSFP28 transceivers, direct-attach copper (DAC) cables, and active optical cables (AOCs). The PTX1000 also supports using small form-factor pluggable (SFP) transceivers to connect the SFP management (**MGMT**) port. SFP transceivers are not supported for use on the network ports. The following SFP transceivers are supported in the SFP management port only:

- SFP-1GE-LX
- SFP-1GE-SX
- SFP-1GE-T

You can find information about the pluggable transceivers supported on your Juniper Networks device by using the Hardware Compatibility Tool. In addition to transceiver and connector type, the optical and cable characteristics—where applicable—are documented for each transceiver. The Hardware Compatibility Tool enables you to search by product, displaying all the transceivers supported on that device, or category, by interface speed or type. The list of supported transceivers for the PTX1000 is located at https://pathfinder.juniper.net/hct/product/#prd=PTX1000.

CAUTION: The Juniper Networks Technical Assistance Center (JTAC) provides complete support for Juniper-supplied optical modules and cables. However, JTAC does not provide support for third-party optical modules and cables that are not qualified or supplied by Juniper Networks. If you face a problem running a Juniper device that uses third-party optical modules or cables, JTAC may help you diagnose host-related issues if the observed issue is not, in the opinion of JTAC, related to the use of the third-party optical modules or cables. Your JTAC engineer will likely request that you check the third-party optical module or cable and, if required, replace it with an equivalent Juniper-qualified component.

Use of third-party optical modules with high-power consumption (for example, coherent ZR or ZR+) can potentially cause thermal damage to or reduce the lifespan of the host equipment. Any damage to the host equipment due to the use of third-party optical modules or cables is the users' responsibility. Juniper Networks will accept no liability for any damage caused due to such use.

Cable and Connector Specifications for MX and PTX Series Devices

IN THIS SECTION

- 12-Fiber MPO Connectors | 50
- 24-Fiber MPO Connectors | 55
- LC Duplex Connectors | 56

The transceivers that are supported on MX Series and PTX Series devices use fiber-optic cables and connectors. The type of connector and the type of fiber depends on the transceiver type.

You can determine the type of cable and connector required for your specific transceiver by using the Hardware Compatibility Tool.

CAUTION: To maintain agency approvals, use only a properly constructed, shielded cable.

NOTE: The terms multifiber push-on (MPO) and multifiber termination push-on (MTP) describe the same connector type. The rest of this topic uses MPO to mean MPO or MTP.

12-Fiber MPO Connectors

There are two types of cables used with 12-fiber MPO connectors on Juniper Networks devices—patch cables with MPO connectors on both ends, and breakout cables with an MPO connector on one end and four LC duplex connectors on the opposite end. Depending on the application, the cables might use single-mode fiber (SMF) or multimode fiber (MMF). Juniper Networks sells cables that meet the supported transceiver requirements, but it is not required to purchase cables from Juniper Networks.

Ensure that you order cables with the correct polarity. Vendors refer to these crossover cables as *key up to key up*, *latch up to latch up*, *Type B*, or *Method B*. If you are using patch panels between two transceivers, ensure that the proper polarity is maintained through the cable plant.

Also, ensure that the fiber end in the connector is finished correctly. Physical contact (PC) refers to fiber that has been polished flat. Angled physical contact (APC) refers to fiber that has been polished at an angle. Ultra physical contact (UPC) refers to fiber that has been polished flat, to a finer finish. The required fiber end is listed with the connector type in the Hardware Compatibility Tool.

12-Fiber Ribbon Patch Cables with MPO Connectors

You can use 12-fiber ribbon patch cables with socket MPO connectors to connect two transceivers of the same type—for example, 40GBASE-SR4-to-40GBASESR4 or 100GBASE-SR4-to-100GBASE-SR4. You can also connect 4x10GBASE-LR or 4x10GBASE-SR transceivers by using patch cables—for example, 4x10GBASE-LR-to-4x10GBASE-LR or 4x10GBASE-SR-to-4x10GBASE-SR—instead of breaking the signal out into four separate signals.

Table 20 on page 51 describes the signals on each fiber. Table 21 on page 52 shows the pin-to-pin connections for proper polarity.

Table 20: Cable Signals for 12-Fiber Ribbon Patch Cables

Fiber	Signal
1	Tx0 (Transmit)
2	Tx1 (Transmit)
3	Tx2 (Transmit)
4	Tx3 (Transmit)
5	Unused
6	Unused
7	Unused
8	Unused
9	Rx3 (Receive)
10	Rx2 (Receive)
11	Rx1 (Receive)

Table 20: Cable Signals for 12-Fiber Ribbon Patch Cables *(Continued)*

Fiber	Signal
12	Rx0 (Receive)

Table 21: Cable Pinouts for 12-Fiber Ribbon Patch Cables

MPO Pin	MPO Pin
1	12
2	11
3	10
4	9
5	8
6	7
7	6
8	5
9	4
10	3
11	2
12	1

12-Fiber Ribbon Breakout Cables with MPO-to-LC Duplex Connectors

You can use 12-ribbon breakout cables with MPO-to-LC duplex connectors to connect a QSFP+ transceiver to four separate SFP+ transceivers—for example, 4x10GBASE-LR-to-10GBASE-LR or 4x10GBASE-SR-to-10GBASE-SR SFP+ transceivers. The breakout cable is constructed out of a 12-fiber ribbon fiber-optic cable. The ribbon cable splits from a single cable with a socket MPO connector on one end, into four cable pairs with four LC duplex connectors on the opposite end.

Figure 24 on page 53 shows an example of a typical 12-ribbon breakout cable with MPO-to-LC duplex connectors (depending on the manufacture, your cable may look different).

Figure 24: 12-Ribbon Breakout Cable

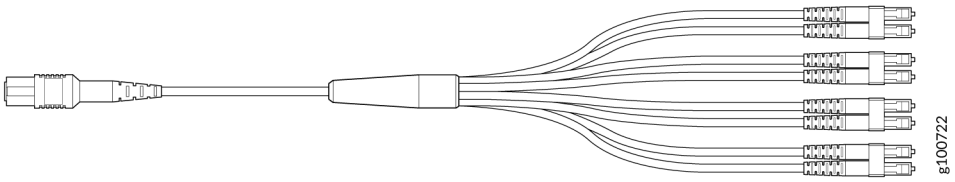

Table 22 on page 53 describes the way the fibers are connected between the MPO and LC duplex connectors. The cable signals are the same as those described in Table 20 on page 51.

Table 22: Cable Pinouts for 12-Fiber Ribbon Breakout Cables

MPO Connector Pin	LC Duplex Connector Pin
1	Tx on LC Duplex 1
2	Tx on LC Duplex 2
3	Tx on LC Duplex 3
4	Tx on LC Duplex 4
5	Unused
6	Unused

Table 22: Cable Pinouts for 12-Fiber Ribbon Breakout Cables *(Continued)*

MPO Connector Pin	LC Duplex Connector Pin
7	Unused
8	Unused
9	Rx on LC Duplex 4
10	Rx on LC Duplex 3
11	Rx on LC Duplex 2
12	Rx on LC Duplex 1

12-Ribbon Patch and Breakout Cables Available from Juniper Networks

Juniper Networks sells 12-ribbon patch and breakout cables with MPO connectors that meet the requirements described above. It is not required to purchase cables from Juniper Networks. Table 23 on page 54 describes the available cables.

Table 23: 12-Ribbon Patch and Breakout Cables Available from Juniper Networks

Cable Type	Connector Type	Fiber Type	Cable Length	Juniper Model Number
12-ribbon patch	Socket MPO/PC to socket MPO/PC, key up to key up	MMF (OM3)	1 m	MTP12-FF-M1M
			3 m	MTP12-FF-M3M
			5 m	MTP12-FF-M5M
			10 m	MTP12-FF-M10M

Table 23: 12-Ribbon Patch and Breakout Cables Available from Juniper Networks *(Continued)*

Cable Type	Connector Type	Fiber Type	Cable Length	Juniper Model Number
	Socket MPO/APC to socket MPO/APC, key up to key up	SMF	1 m	MTP12-FF-S1M
			3 m	MTP12-FF-S3M
			5 m	MTP12-FF-S5M
			10 m	MTP12-FF-S10M
12-ribbon breakout	Socket MPO/PC, key up, to four LC/UPC duplex	MMF (OM3)	1 m	MTP-4LC-M1M
			3 m	MTP-4LC-M3M
			5 m	MTP-4LC-M5M
			10 m	MTP-4LC-M10M
	Socket MPO/APC, key up, to four LC/UPC duplex	SMF	1 m	MTP-4LC-S1M
			3 m	MTP-4LC-S3M
			5 m	MTP-4LC-S5M
			10 m	MTP-4LC-S10M

24-Fiber MPO Connectors

You can use patch cables with 24-fiber MPO connectors to connect two supported transceivers of the same type—for example, 100GBASE-SR10-to-100GBASE-SR10.

Figure 25 on page 56 shows the 24-fiber MPO optical lane assignments.

Figure 25: 24-Fiber MPO Optical Lane Assignments

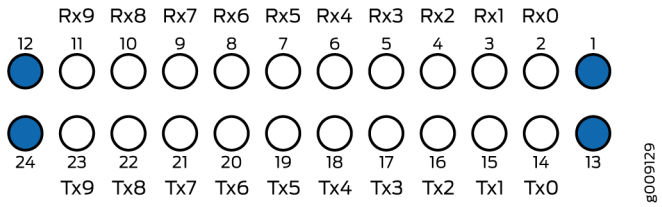

NOTE: Ensure that you order cables with the correct polarity. Vendors refer to these crossover cables as *key up to key up*, *latch up to latch up*, *Type B*, or *Method B*. If you are using patch panels between two transceivers, ensure that the proper polarity is maintained through the cable plant.

The MPO optical connector for the CFP2-100G-SR10-D3 is defined in *Section 5.6 of the CFP2 Hardware Specification and Section 88.10.3 of IEEE STD 802.3-2012*. These specifications include the following requirements:

- Recommended Option A in IEEE STD 802.3-2012.
- The transceiver receptacle is a plug. A patch cable with a socket connector is required to mate with the module.
- Ferrule finish shall be flat polished interface that is compliant with IEC 61754-7.
- Alignment key is key up.

The optical interface must meet the requirement FT-1435-CORE in *Generic Requirements for Multi-Fiber Optical Connectors*. The module must pass the wiggle test defined by IEC 62150-3.

LC Duplex Connectors

You can use patch cables with LC duplex connectors to connect two supported transceivers of the same type—for example, 40GBASE-LR4-to-40GBASE-LR4 or 100GBASE-LR4-to100GBASE-LR4. The patch cable is one fiber pair with two LC duplex connectors at opposite ends. LC duplex connectors are also used with 12-fiber ribbon breakout cables, as described in "12-Fiber Ribbon Breakout Cables with MPO-to-LC Duplex Connectors" on page 53.

Figure 26 on page 57 shows an LC duplex connector being installed in a transceiver.

Figure 26: LC Duplex Connector

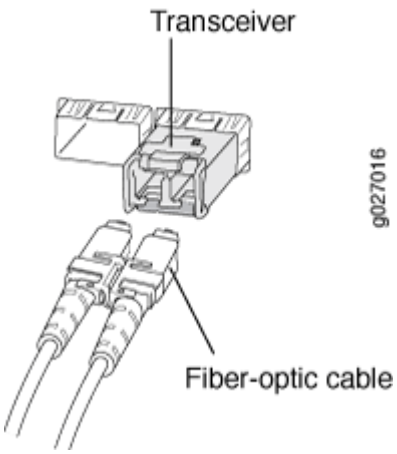

Fiber-Optic Cable Signal Loss, Attenuation, and Dispersion

IN THIS SECTION

- Signal Loss in Multimode and Single-Mode Fiber-Optic Cable | 57
- Attenuation and Dispersion in Fiber-Optic Cable | 58

Signal Loss in Multimode and Single-Mode Fiber-Optic Cable

Multimode fiber is large enough in diameter to allow rays of light to reflect internally (bounce off the walls of the fiber). Interfaces with multimode optics typically use LEDs as light sources. However, LEDs are not coherent sources. They spray varying wavelengths of light into the multimode fiber, which reflects the light at different angles. Light rays travel in jagged lines through a multimode fiber, causing signal dispersion. When light traveling in the fiber core radiates into the fiber cladding, higher-order mode loss results. Together these factors limit the transmission distance of multimode fiber compared with single-mode fiber.

Single-mode fiber is so small in diameter that rays of light can reflect internally through one layer only. Interfaces with single-mode optics use lasers as light sources. Lasers generate a single wavelength of

light, which travels in a straight line through the single-mode fiber. Compared with multimode fiber, single-mode fiber has higher bandwidth and can carry signals for longer distances.

Exceeding the maximum transmission distances can result in significant signal loss, which causes unreliable transmission.

Attenuation and Dispersion in Fiber-Optic Cable

Correct functioning of an optical data link depends on modulated light reaching the receiver with enough power to be demodulated correctly. *Attenuation* is the reduction in power of the light signal as it is transmitted. Attenuation is caused by passive media components such as cables, cable splices, and connectors. Although attenuation is significantly lower for optical fiber than for other media, it still occurs in both multimode and single-mode transmission. An efficient optical data link must have enough light available to overcome attenuation.

Dispersion is the spreading of the signal over time. The following two types of dispersion can affect an optical data link:

- Chromatic dispersion—Spreading of the signal over time, resulting from the different speeds of light rays.
- Modal dispersion—Spreading of the signal over time, resulting from the different propagation modes in the fiber.

For multimode transmission, modal dispersion—rather than chromatic dispersion or attenuation—usually limits the maximum bit rate and link length. For single-mode transmission, modal dispersion is not a factor. However, at higher bit rates and over longer distances, chromatic dispersion rather than modal dispersion limits maximum link length.

An efficient optical data link must have enough light to exceed the minimum power that the receiver requires to operate within its specifications. In addition, the total dispersion must be less than the limits specified for the type of link in Telcordia Technologies document GR-253-CORE (Section 4.3) and International Telecommunications Union (ITU) document G.957.

When chromatic dispersion is at the maximum allowed, its effect can be considered as a power penalty in the power budget. The optical power budget must allow for the sum of component attenuation, power penalties (including those from dispersion), and a safety margin for unexpected losses.

Calculating Power Budget and Power Margin for Fiber-Optic Cables

IN THIS SECTION

- How to Calculate Power Budget for Fiber-Optic Cables | 59
- How to Calculate Power Margin for Fiber-Optic Cables | 59

Use the information in this topic and the specifications for your optical interface to calculate the power budget and power margin for fiber-optic cables.

TIP: You can use the Hardware Compatibility Tool to find information about the pluggable transceivers supported on your Juniper Networks device.

To calculate the power budget and power margin, perform the following tasks:

How to Calculate Power Budget for Fiber-Optic Cables

To ensure that fiber-optic connections have sufficient power for correct operation, you need to calculate the link's power budget, which is the maximum amount of power it can transmit. When you calculate the power budget, you use a worst-case analysis to provide a margin of error, even though all the parts of an actual system do not operate at the worst-case levels. To calculate the worst-case estimate of power budget (P_B), you assume minimum transmitter power (P_T) and minimum receiver sensitivity (P_R):

$P_B = P_T - P_R$

The following hypothetical power budget equation uses values measured in decibels (dB) and decibels referred to one milliwatt (dBm):

$P_B = P_T - P_R$

$P_B = -15 \text{ dBm} - (-28 \text{ dBm})$

$P_B = 13 \text{ dB}$

How to Calculate Power Margin for Fiber-Optic Cables

After calculating a link's power budget, you can calculate the power margin (P_M), which represents the amount of power available after subtracting attenuation or link loss (LL) from the power budget (P_B). A worst-case estimate of P_M assumes maximum LL:

$P_M = P_B - LL$

P_M greater than zero indicates that the power budget is sufficient to operate the receiver.

Factors that can cause link loss include higher-order mode losses, modal and chromatic dispersion, connectors, splices, and fiber attenuation. Table 24 on page 60 lists an estimated amount of loss for the factors used in the following sample calculations. For information about the actual amount of signal loss caused by equipment and other factors, refer to vendor documentation.

Table 24: Estimated Values for Factors Causing Link Loss

Link-Loss Factor	Estimated Link-Loss Value
Higher-order mode losses	Single mode—None Multimode—0.5 dB
Modal and chromatic dispersion	Single mode—None Multimode—None, if product of bandwidth and distance is less than 500 MHz-km
Faulty connector	0.5 dB
Splice	0.5 dB
Fiber attenuation	Single mode—0.5 dB/km Multimode—1 dB/km

The following sample calculation for a 2-km-long multimode link with a power budget (P_B) of 13 dB uses the estimated values from Table 24 on page 60. This example calculates link loss (LL) as the sum of fiber attenuation (2 km @ 1 dB/km, or 2 dB) and loss for five connectors (0.5 dB per connector, or 2.5 dB) and two splices (0.5 dB per splice, or 1 dB) as well as higher-order mode losses (0.5 dB). The power margin (P_M) is calculated as follows:

$P_M = P_B - LL$

$P_M = 13\ dB - 2\ km\ (1\ dB/km) - 5\ (0.5\ dB) - 2\ (0.5\ dB) - 0.5\ dB$

$P_M = 13\ dB - 2\ dB - 2.5\ dB - 1\ dB - 0.5\ dB$

$P_M = 7\ dB$

The following sample calculation for an 8-km-long single-mode link with a power budget (P_B) of 13 dB uses the estimated values from Table 24 on page 60. This example calculates link loss (LL) as the sum of fiber attenuation (8 km @ 0.5 dB/km, or 4 dB) and loss for seven connectors (0.5 dB per connector, or 3.5 dB). The power margin (P_M) is calculated as follows:

$P_M = P_B - LL$

$P_M = 13\ dB - 8\ km\ (0.5\ dB/km) - 7(0.5\ dB)$

$P_M = 13\ dB - 4\ dB - 3.5\ dB$

$P_M = 5.5\ dB$

In both examples, the calculated power margin is greater than zero, indicating that the link has sufficient power for transmission and does not exceed the maximum receiver input power.

PTX1000 Management Cable Specifications and Pinouts

IN THIS SECTION

- Cable Specifications for Console and Management Connections for the PTX1000 | **61**
- Management Port Connector Pinouts for the PTX1000 | **62**
- Console Port Connector Pinouts for the PTX1000 | **63**
- USB Port Specifications for the PTX1000 | **64**

Cable Specifications for Console and Management Connections for the PTX1000

Table 25 on page 62 lists the specifications for the cables that connect the PTX1000 to a management device.

NOTE: The PTX1000 also has an SFP management port that supports transceivers that use fiber-optic cables. See "Determining Transceiver Support for the PTX1000" on page 48 for more information about supported transceivers.

Table 25: Cable Specifications for Console and Management Connections for the PTX1000

Port on PTX1000	Cable Specification	Cable Supplied	Maximum Length	Device Receptacle
Console (**CON**) port	RS-232 (EIA-232) serial cable	One 7-foot (2.13-meter)-long RJ-45 patch cable and RJ-45 to DB-9 adapter	7 feet (2.13 meters)	RJ-45
Management (**MGMT**) port	Category 5 cable or equivalent suitable for 1000BASE-T operation	One 7-foot (2.13-meter)-long RJ-45 patch cable	328 feet (100 meters)	RJ-45

Management Port Connector Pinouts for the PTX1000

The 10/100/1000BASE-T RJ-45 management port (labeled **MGMT**) uses an RJ-45 connector to connect to a management device for out-of-band management.

Table 26 on page 62 provides the pinout information of the RJ-45 management port connector. An RJ-45 cable is supplied with the PTX1000.

Table 26: RJ-45 Management Port Connector Pinouts for the PTX1000

Pin	Signal	Description
1	TRP1+	Transmit/receive data pair 1
2	TRP1–	Transmit/receive data pair 1

Table 26: RJ-45 Management Port Connector Pinouts for the PTX1000 ***(Continued)***

Pin	Signal	Description
3	TRP2+	Transmit/receive data pair 2
4	TRP3+	Transmit/receive data pair 3
5	TRP3–	Transmit/receive data pair 3
6	TRP2–	Transmit/receive data pair 2
7	TRP4+	Transmit/receive data pair 4
8	TRP4–	Transmit/receive data pair 4

Console Port Connector Pinouts for the PTX1000

The console port (labeled **CON**) is an RS-232 serial interface that uses an RJ-45 connector to connect to a console management device. The default baud rate for the console port is 9600 baud.

Table 27 on page 63 provides the pinout information for the RJ-45 console connector. An RJ-45 cable and an RJ-45 to DB-9 adapter are supplied with the PTX1000.

> **NOTE**: If your laptop or PC does not have a DB-9 plug connector pin and you want to connect your laptop or PC directly to a PTX1000, use a combination of the RJ-45 cable and RJ-45 to DB-9 adapter supplied with the router and a USB to DB-9 plug adapter. You must provide the USB to DB-9 plug adapter.

Table 27: Console Port Connector Pinouts for the PTX1000

Pin	Signal	Description
1	RTS Output	Request to send

Table 27: Console Port Connector Pinouts for the PTX1000 ***(Continued)***

Pin	Signal	Description
2	DTR Output	Data terminal ready
3	TxD Output	Transmit data
4	Signal Ground	Signal ground
5	Signal Ground	Signal ground
6	RxD Input	Receive data
7	DCD Input	Data carrier detect
8	CTS Input	Clear to send

USB Port Specifications for the PTX1000

USB flash drives used with the PTX1000 must support USB 2.0 or later.

CAUTION: Remove the USB flash drive before upgrading Junos OS or rebooting a PTX1000. Failure to do so could expose your router to unpredictable behavior.

RELATED DOCUMENTATION

PTX1000 Management Panel | **19**

3

CHAPTER

Initial Installation and Configuration

PTX1000 Installation Overview | 66

Unpacking and Mounting the PTX1000 | 68

Connecting the PTX1000 to Power | 73

Connecting the PTX1000 to External Devices | 83

Performing the Initial Software Configuration for the PTX1000 | 86

Powering Off the PTX1000 | 88

PTX1000 Installation Overview

IN THIS SECTION

- Overview of Installing the PTX1000 | 66
- PTX1000 Installation Safety Guidelines | 67

Overview of Installing the PTX1000

Before you begin to install and connect a PTX1000, ensure that you have reviewed the information in "PTX1000 Installation Safety Guidelines" on page 67.

You can mount a PTX1000 flush with the front of a 19-in. four-post rack. Use the standard mounting brackets provided with the PTX1000 for this configuration.

To install and connect a PTX1000:

1. Unpack the PTX1000 and verify the components received. See "Unpacking the PTX1000" on page 68.
2. Mount the PTX1000 in a rack. See "Mounting the PTX1000 in a Rack" on page 69.
3. For installations that require a separate grounding conductor to the chassis, follow the instructions in "Connecting the PTX1000 to Ground" on page 73.
4. Connect the PTX1000 to power. Depending on your configuration, follow the instructions in "Connecting AC Power to the PTX1000" on page 75 or "Connecting DC Power to the PTX1000" on page 78.
5. Connect the PTX1000 to a management console for initial configuration. See "Connecting the PTX1000 to a Management Console" on page 84.
6. Initially configure Junos OS following the instructions in "Performing the Initial Software Configuration for the PTX1000" on page 86.

SEE ALSO

PTX1000 Site Preparation Checklist | 39

PTX1000 Installation Safety Guidelines

IN THIS SECTION

- General Installation Safety Guidelines | 67
- PTX1000 Chassis Lifting Guidelines | 67

Observe the following guidelines before and during PTX1000 installation:

General Installation Safety Guidelines

Before installing or moving the PTX1000, verify that the intended site meets the specified power, environmental, and clearance requirements. See the following documentation:

- "PTX1000 Site Preparation Checklist" on page 39
- "PTX1000 Clearance Requirements for Airflow and Hardware Maintenance" on page 44
- "PTX1000 Rack Requirements" on page 46
- "PTX1000 Environmental Requirements and Specifications" on page 41
- "PTX1000 AC Power Specifications" on page 33 or "PTX1000 DC Power Specifications" on page 35

PTX1000 Chassis Lifting Guidelines

The weight of a fully-loaded PTX1000 is approximately 68.6 lb (31.1 kg) with AC power supplies and 67.8 lb (30.8 kg) with DC power supplies installed. In addition to the guidelines described in *Chassis and Component Lifting Guidelines*, observe the following guidelines for lifting and moving a PTX1000:

> **CAUTION**: If you are installing the PTX1000 above 60 in. (152.4 cm) from the floor, remove the power supplies and fan modules before attempting to install the device. Unless you are using a mechanical lift, at least three persons are required to perform the rack installation.

- Before lifting or moving the PTX1000, disconnect all external cables.
- When manually raising the PTX1000 into the rack, have two persons lift and align the PTX1000 with the rack while another person secures the device to the rack. As when lifting any heavy object, lift

most of the weight with your legs rather than your back. Keep your knees bent and your back relatively straight and avoid twisting your body as you lift. Balance the load evenly and be sure that your footing is solid.

SEE ALSO

Mounting the PTX1000 in a Rack | 69

Unpacking and Mounting the PTX1000

IN THIS SECTION

- Unpacking the PTX1000 | 68
- Mounting the PTX1000 in a Rack | 69

Unpacking the PTX1000

The PTX1000 chassis is a rigid sheet-metal structure that houses the hardware components. The PTX1000 is shipped in a cardboard carton, secured with foam packing material. The carton also contains an accessory kit and quick start instructions.

> **CAUTION**: PTX1000 routers are maximally protected inside the shipping carton. Do not unpack the PTX1000 until you are ready to begin installation.

To unpack a PTX1000:

1. Move the shipping carton to a staging area as close to the installation site as possible, but where you have enough room to remove the system components.
2. Position the carton so that the arrows point upward.
3. Open the top flaps on the shipping carton.
4. Remove the accessory kit and verify the contents against the inventory of components listed in Table 28 on page 69.
5. Pull out the packing material holding the PTX1000 in place and the PTX1000 chassis.

6. Verify the chassis components received:
   - Three fan modules
   - Four power supplies
7. Save the shipping carton and packing materials in case you need to move or ship the chassis later.

Table 28: Inventory of Components Supplied with a PTX1000

Component	Quantity
Chassis with three fan modules and four power supplies	1
Rear-mounting blades	2
Front-mounting rails	2
RJ-45 cable and RJ-45 to DB-9 adapter	1

Mounting the PTX1000 in a Rack

IN THIS SECTION

- Before You Begin Mounting the PTX1000 | **70**
- Mounting the PTX1000 | **71**

You can mount a PTX1000 in a four post 19-in. rack by using the included mounting brackets.

For four-post rack installation, the shipping carton contains two front-mounting rails with two matching rear-mounting blades. This configuration allows either end of the PTX1000 to be mounted flush with the rack and still be adjustable for racks with different depths. The minimum distance the front and rear rack rails can be spaced apart is 28 in. (71.1 cm) front to back. The maximum distance the front and rear rack rails can be spaced apart is 36 in. (91.4 cm) front to back.

Before You Begin Mounting the PTX1000

Before you begin mounting a PTX1000 in the rack:

1. Ensure that you understand how to prevent electrostatic discharge (ESD) damage. See *Prevention of Electrostatic Discharge Damage*.
2. Verify that the site meets the requirements described in "PTX1000 Site Preparation Checklist" on page 39.
3. Place the rack in its permanent location, allowing adequate clearance for airflow and maintenance, and secure it to the building structure.
4. Read *General Safety Guidelines and Warnings* , "PTX1000 Installation Safety Guidelines" on page 67, and *Chassis and Component Lifting Guidelines*.
5. Remove the PTX1000 from the shipping carton (see "Unpacking the PTX1000" on page 68).
6. Ensure that you have the following parts and tools available to mount the PTX1000 in a rack:
   - Either a mechanical lift or two persons to lift the PTX1000 into place. An additional person is needed for securing the router to the rack.
   - ESD grounding strap (not provided).
   - A pair of front-mounting rails (provided).
   - A pair of rear-mounting blades (provided). These mounting blades support the rear of the chassis and must be installed.
   - Flat-head M4x6-mm Phillips mounting screws to secure the mounting rail to the chassis (24 screws are provided—11 for each side and 2 extra screws).
   - Sixteen screws to secure the chassis and mounting blades to the rack (not provided).
   - Screwdriver appropriate for the rack-mounting screws (not provided).

WARNING: PTX1000 routers must be supported at all four corners. Mounting the chassis by using only the front brackets will damage the chassis and can result in serious bodily injury.

CAUTION: PTX1000 routers require at least three persons for installation, two persons to lift the PTX1000 into place and another person to attach the device to the rack. You can remove the power supplies and fan modules to minimize the weight before attempting to install the PTX1000. For overhead installation—for example, if you are installing the PTX1000 above 60 in. (152.4 cm) from the floor—we recommend that you use a mechanical lift.

CAUTION: If you are mounting multiple devices in a rack, mount the device in the lowest position of the rack first. Proceed to mount the rest of the devices from the bottom to the top of the rack to minimize the risk of the rack toppling.

Mounting the PTX1000

To mount the PTX1000 on four posts in a rack by using the provided mounting kit:

1. Attach the ESD grounding strap to your bare wrist and to a site ESD point.
2. Decide whether the field-replaceable unit (FRU) end or the port end of the PTX1000 must be placed at the front of the rack. Position the PTX1000 in such a manner that the **AIR OUT** labels on components are next to the hot aisle.
3. Using a Phillips screwdriver, remove the six screws on each side of the chassis that hold the cover to the chassis (see Figure 27 on page 71). These screws will be replaced with the mounting screws included in the box.

Figure 27: Removing the Screws Holding the Cover on the PTX1000

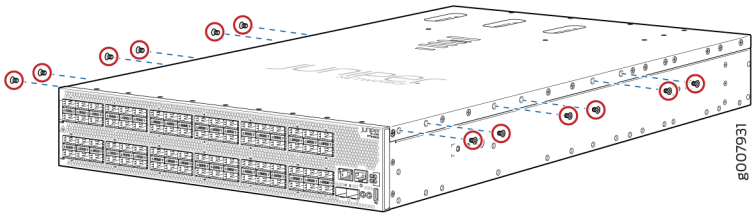

4. Align one of the front-mounting rails with the screw holes on the side of the chassis (see Figure 28 on page 71).

Figure 28: Attaching Front-Mounting Rails to the PTX1000

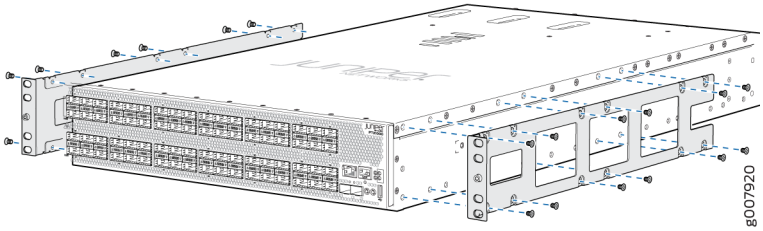

5. Attach the mounting rail to the PTX1000 by using 11 flat-head M4x6-mm Phillips mounting screws. Tighten the screws.
6. Repeat Step 4 and Step 5 on the opposite side of the PTX1000.

7. Perform one of the following steps:
   - Use a mechanical lift to position the PTX1000 in the rack so that the ears on the front-mounting rails are aligned with the rack holes.
   - Have two persons grasp both sides of the PTX1000, lift it, and position it in the rack so that the ears on the front-mounting rails are aligned with the rack holes.
8. Have another person secure the front of the PTX1000 to the rack by using eight mounting screws (and cage nuts and washers if your rack requires them). Tighten the screws.
9. Continue to support the PTX1000 while sliding the rear-mounting blades into the channel of the side-mounting rails and securing the blades to the rack (see Figure 29 on page 72). Use eight mounting screws (and cage nuts and washers if your rack requires them) to attach the blade to the rack. Tighten the screws.

Figure 29: Attaching Rear-Mounting Blades to the Rack

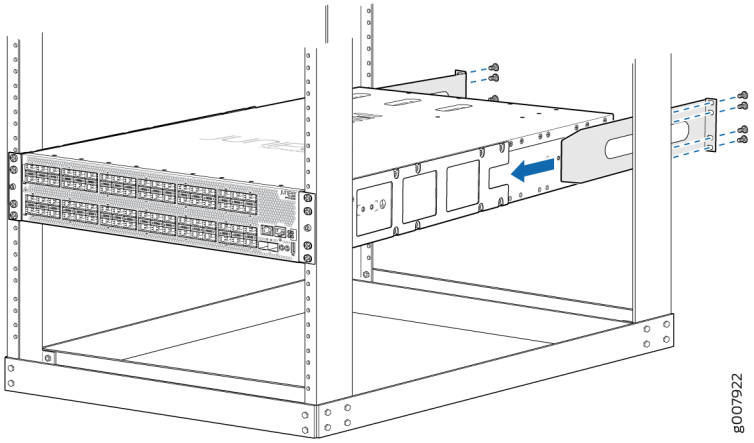

10. Ensure that the PTX1000 chassis is level by verifying that all the screws on the front of the rack are aligned with the screws at the back of the rack.

RELATED DOCUMENTATION

PTX1000 Site Preparation Checklist | 39

Connecting the PTX1000 to Power

IN THIS SECTION

- Connecting the PTX1000 to Ground | 73
- Connecting AC Power to the PTX1000 | 75
- Connecting DC Power to the PTX1000 | 78

Connecting the PTX1000 to Ground

To meet safety and electromagnetic interference (EMI) requirements and to ensure proper operation, you must connect the chassis to earth ground before you connect it to power. For installations that require a separate grounding conductor to the chassis, use the protective earthing terminal on the PTX1000 chassis to connect to the earth ground.

NOTE: An AC-powered PTX1000 gains additional grounding when you plug the power supply in the device into a grounded AC power outlet by using an AC power cord appropriate for your geographical location. See "PTX1000 AC Power Cord Specifications" on page 34.

CAUTION: Before you connect power to the PTX1000, a licensed electrician must attach a cable lug to the grounding and power cables that you supply. A cable with an incorrectly attached lug can damage the PTX1000 (for example, by causing a short circuit).

NOTE: Mount the PTX1000 in the rack before attaching the grounding lug to the PTX1000. See "Mounting the PTX1000 in a Rack" on page 69.

NOTE: You must install the PTX1000 in a restricted-access location and ensure that the chassis is always properly grounded. The PTX1000 has a two-hole protective grounding terminal provided on the chassis. See Figure 30 on page 75. We recommend that you use this protective

grounding terminal as the preferred method for grounding the chassis regardless of the power supply configuration. However, if additional grounding methods are available, you can also use those methods. For example, you can use the grounding wire in the AC power cord or use the grounding terminal or lug on a DC power supply. This tested system meets or exceeds all applicable EMC regulatory requirements with the two-hole protective grounding terminal.

Ensure that you have the following parts and tools available:

- Grounding cable—The grounding cable must be 8 AWG (8.4 mm^2), minimum 90° C wire, or as permitted by the local code (not provided).
- Grounding lug for your grounding cable—The grounding lug required is a Panduit LCC8-14A-L or equivalent (provided).
- Two #10-32 UNF screws and washers (not provided).
- Screwdriver appropriate for the #10-32 UNF screws (not provided).

To connect a grounding cable to the PTX1000:

1. Connect one end of the grounding cable to a proper site earth ground, such as the rack in which the PTX1000 is mounted.

2. Place the grounding lug attached to the grounding cable over the protective earthing terminal on the chassis (see Figure 30 on page 75).

Figure 30: Connecting a Grounding Cable to the PTX1000

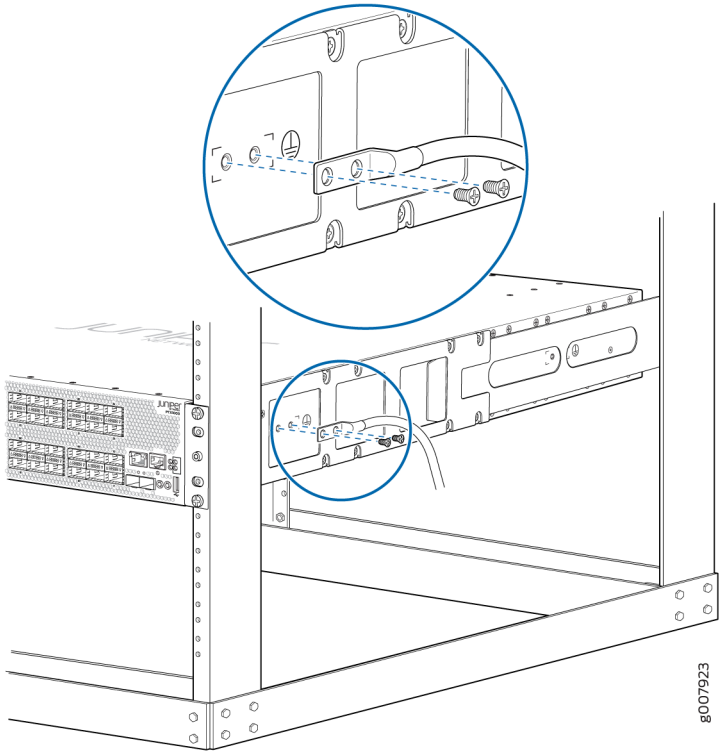

3. Secure the grounding lug to the protective earthing terminal with the washers and screws.
4. Dress the grounding cable and ensure that it does not touch or block access to other device components and that it does not drape where people could trip over it.

SEE ALSO

PTX1000 Chassis Grounding Cable and Lug Specifications | 43

Connecting AC Power to the PTX1000

Before you begin connecting AC power to the PTX1000:

- Read *AC Power Electrical Safety Guidelines* and *AC Power Disconnection Warning*.

- Ensure that you have taken the necessary precautions to prevent electrostatic discharge (ESD) damage (see *Prevention of Electrostatic Discharge Damage*).
- Ensure that you have connected the PTX1000 chassis to earth ground.

> **CAUTION**: Before you connect power to the PTX1000, a licensed electrician must attach a cable lug to the grounding and power cables that you supply. A cable with an incorrectly attached lug can damage the router (for example, by causing a short circuit).

> **NOTE**: To meet safety and electromagnetic interference (EMI) requirements and to ensure proper operation, you must connect the chassis to earth ground before you connect it to power. For installations that require a separate grounding conductor to the chassis, use the protective earthing terminal on the PTX1000 chassis to connect to the earth ground (see "Connecting the PTX1000 to Ground" on page 73).

> **NOTE**: An AC-powered PTX1000 gains additional grounding when you plug the router's power supply into a grounded AC power outlet by using an AC power cord appropriate for your geographical location. See "PTX1000 AC Power Cord Specifications" on page 34.

- Install the power supply in the chassis following the instructions in "Installing a Power Supply in a PTX1000" on page 96.
- Ensure that you have the following parts and tools available:
  - ESD grounding strap
  - Power cord or cords appropriate for your geographical location available to connect AC power to the PTX1000 (see "PTX1000 AC Power Cord Specifications" on page 34).

> **CAUTION**: Do not mix AC and DC power supplies in the same chassis.

> **NOTE**: Each power supply must be connected to a dedicated power source outlet.

To connect AC power to a PTX1000:

1. To prevent damage to the equipment caused by static discharge, attach an electrostatic discharge (ESD) grounding strap to your bare wrist, and connect the strap to an approved site ESD grounding point.
2. Ensure that the power supplies are fully inserted in the chassis and the latches are secure.
3. Locate the power cord or cords shipped with the PTX1000; the cords have plugs appropriate for your geographical location. See "PTX1000 AC Power Cord Specifications" on page 34.

> **WARNING**: Ensure that the power cord does not block access to router components or drape where people could trip over it.

4. Insert the coupler end of the power cord into the AC power cord inlet on the AC power supply faceplate (see Figure 31 on page 77).

Figure 31: Connecting an AC Power Cord to an AC Power Supply in a PTX1000

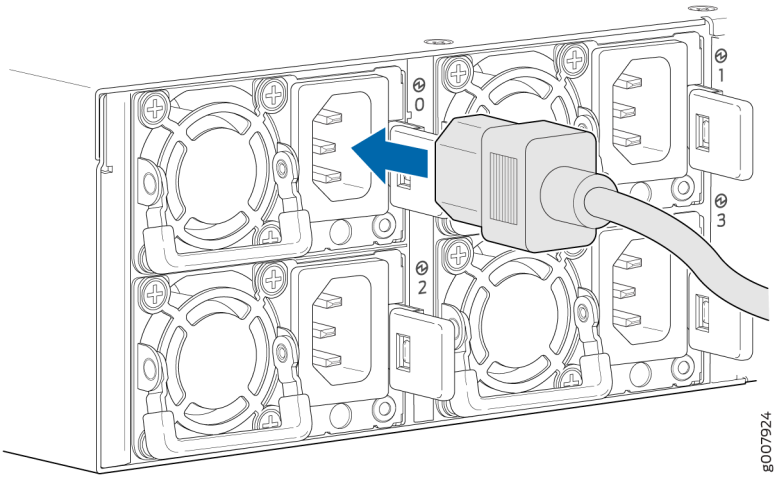

5. If the AC power source outlet has a power switch, set it to the off (**O**) position.

> **NOTE**: The PTX1000 powers on as soon as power is provided to the power supply. There is no power switch on the router.

6. Insert the power cord plug into an AC power source outlet.
7. Repeat Step 4 through Step 6 for each power supply that you are connecting to power.
8. If the AC power source outlet has a power switch, set it to the on (|) position.
9. Verify that the status LEDs on each power supply are lit green.

   If the status LED is lit amber, remove power from the power supply, and replace the power supply (see "Removing a Power Supply from the PTX1000" on page 95). Do not remove the power supply

until you have a replacement power supply ready: the power supplies must be installed in the PTX1000 to ensure proper airflow.

> **CAUTION**: Replace a failed power supply with a new power supply within 30 seconds of removal to prevent overheating of the chassis.

SEE ALSO

PTX1000 AC Power Supply Description | **28**

Connecting DC Power to the PTX1000

Before you begin connecting DC power to the PTX1000:

- Read "PTX1000 DC Power Electrical Safety Guidelines" on page 147, and the following warnings:
  - *DC Power Copper Conductors Warning*
  - *DC Power Disconnection Warning*
  - *DC Power Grounding Requirements and Warning*
  - *DC Power Wiring Sequence Warning*
  - *DC Power Wiring Terminations Warning*
- Ensure that you have taken the necessary precautions to prevent electrostatic discharge (ESD) damage (see *Prevention of Electrostatic Discharge Damage*).
- Ensure that you have connected the PTX1000 chassis to earth ground.

> **CAUTION**: Before you connect power to the PTX1000, a licensed electrician must attach a cable lug to the grounding and power cables that you supply. A cable with an incorrectly attached lug can damage the router (for example, by causing a short circuit).

> **NOTE**: To meet safety and electromagnetic interference (EMI) requirements and to ensure proper operation, you must connect the chassis to earth ground before you connect it to

power. For installations that require a separate grounding conductor to the chassis, use the protective earthing terminal on the PTX1000 chassis to connect to the earth ground (see "Connecting the PTX1000 to Ground" on page 73).

- Install the power supply in the chassis following the instructions in "Installing a Power Supply in a PTX1000" on page 96.
- Ensure that you have the following parts and tools available:
  - ESD grounding strap
  - Slotted (–) screwdriver, 1/4-in., with a torque range between 6 lb-in (0.68 Nm) and 7 lb-in (0.79 Nm)

    CAUTION: You must use an appropriate torque-controlled tool to tighten the screws on the DC power cable connector. Do not overtighten the screws. Applying excessive torque damages the terminal block and the wiring tray. The absolute maximum torque that may be applied to this screw is 10 lb-in (1.13 Nm).

  - Power cable or cables appropriate for your geographical location available to connect DC power to the PTX1000. There are two types of DC power cables—a straight DC power cable (CBL-JNP-PWR-DSUB) and a right-angle DC power cable (CBL-JNP-PWR-DSUB2 or CBL-JNP-PWR-DSUB3). See "PTX1000 DC Power Cable Specifications" on page 36 for more information.

WARNING: DC-powered PTX1000 models are intended for installation only in a restricted-access location.

CAUTION: Do not mix AC and DC power supplies in the same chassis.

NOTE: Each power supply must be connected to a dedicated power source outlet.

To connect DC power to a PTX1000:

1. To prevent damage to the equipment caused by static discharge, attach an ESD grounding strap to your bare wrist, and connect the strap to an approved site ESD grounding point.
2. Ensure that the power supplies are fully inserted in the chassis and the latches are secure.

3. If you are using the straight DC power cable (CBL-JNP-PWR-DSUB), connect the green grounding wire in each power cable to ground.

4. Connect each power supply to the power source, by inserting the DC connector into the power supply. See Figure 32 on page 81, Figure 33 on page 81, or Figure 34 on page 82.

Figure 32: Connecting a Straight DC Power Cable to a DC Power Supply in a PTX1000 (CBL-JNP-PWR-DSUB)

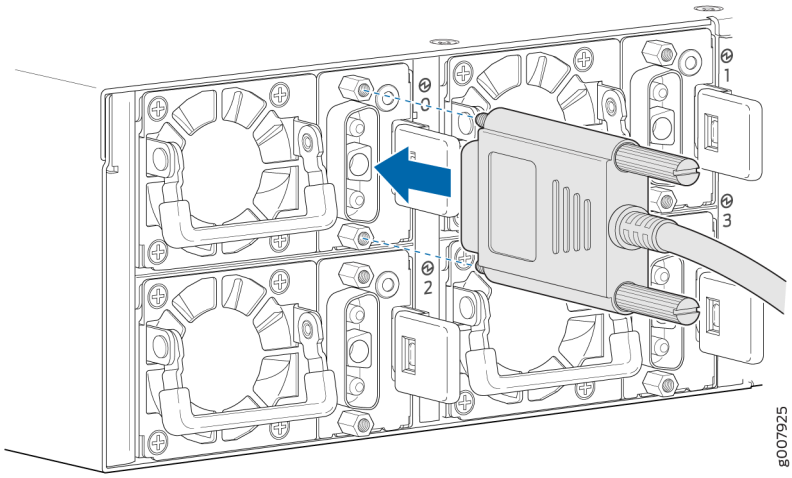

Figure 33: Connecting a Right-Angle DC Power Cable to a DC Power Supply in a PTX1000 (CBL-JNP-PWR-DSUB2)

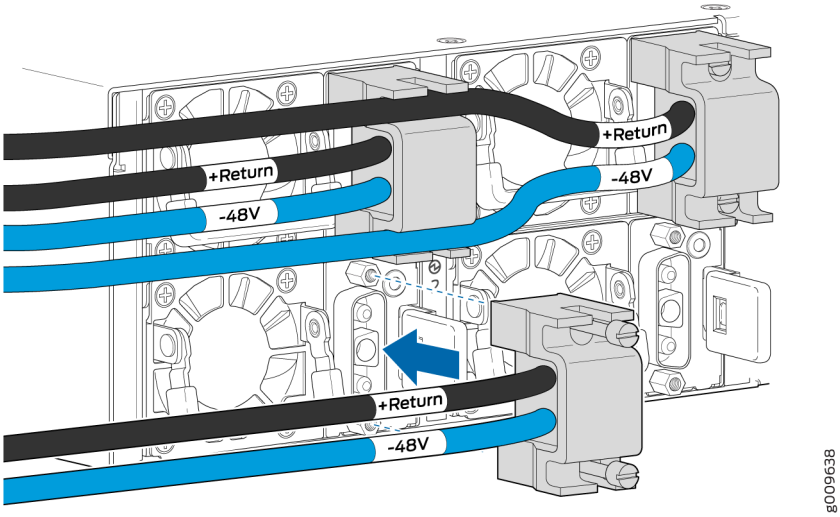

Figure 34: Connecting a Right-Angle DC Power Cable to a DC Power Supply in a PTX1000 (CBL-JNP-PWR-DSUB3)

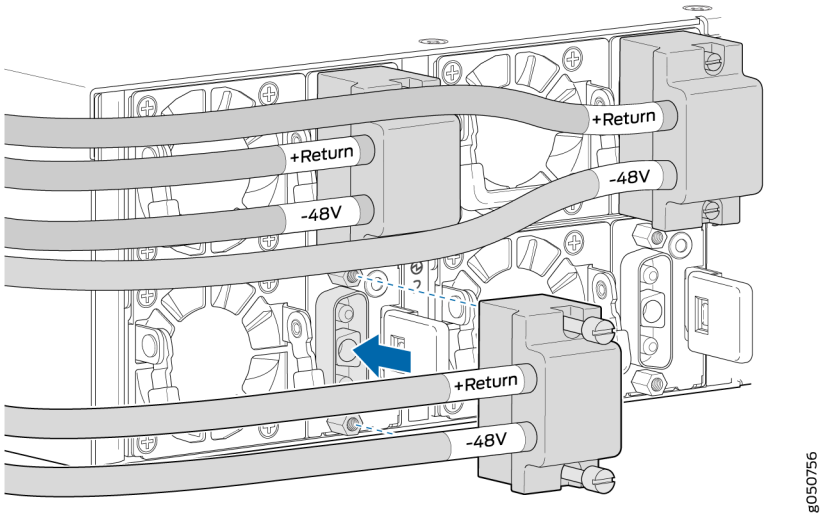

WARNING: Ensure that the power cables do not block access to device components or drape where people could trip over them.

5. Using the slotted screwdriver, tighten the screws on the power cable connector to between 6 lb-in (0.68 Nm) and 7 lb-in (0.79 Nm).

CAUTION: You must use an appropriate torque-controlled tool to tighten the screws on the DC power cable connector. Do not overtighten the screws. Applying excessive torque damages the terminal block and the wiring tray. The absolute maximum torque that may be applied to this screw is 10 lb-in (1.13 Nm).

6. Repeat Step 4 and Step 5 for each power supply that you are connecting to power.
7. Close the input circuit breaker.

NOTE: We recommend that the 48-VDC facility DC source be equipped with a circuit breaker rated at 40 A (–48 VDC) minimum, or as required by local code.

> **NOTE**: The PTX1000 powers on as soon as power is provided to the power supply. There is no power switch on the router.

8. Verify that the status LEDs on each power supply are lit green.

   If the status LED is lit amber, remove power from the power supply, and replace the power supply (see "Removing a Power Supply from the PTX1000" on page 95). Do not remove the power supply until you have a replacement power supply ready: the power supplies must be installed in the PTX1000 to ensure proper airflow.

> ⚠ **CAUTION**: Replace a failed power supply with a new power supply within 30 seconds of removal to prevent chassis overheating.

SEE ALSO

PTX1000 DC Power Supply Description | 30

Connecting the PTX1000 to External Devices

IN THIS SECTION

- Connecting the PTX1000 to a Management Ethernet Device | 83
- Connecting the PTX1000 to a Management Console | 84

Connecting the PTX1000 to a Management Ethernet Device

Ensure that you have an appropriate cable available. See "Cable Specifications for Console and Management Connections for the PTX1000" on page 61 and "Determining Transceiver Support for the PTX1000" on page 48.

You can monitor and manage the PTX1000 by using a dedicated management channel. The PTX1000 has two management ports—a 10/100/1000BASE-T RJ-45 port for copper connections and a

Gigabit Ethernet SFP port for fiber-optic connections. Use the management ports to connect the PTX1000 to a network for out-of-band management.

> **NOTE**: You cannot use the management ports to perform the initial configuration of the PTX1000. You must configure the management ports through the console connection before you can successfully connect to the PTX1000 by using these ports. See "Performing the Initial Software Configuration for the PTX1000" on page 86.

To connect a PTX1000 to a network for out-of-band management (see Figure 35 on page 84):

1. Connect one end of the cable to one of the two management ports—labeled **MGMT**—on the PTX1000.
2. Connect the other end of the cable to the management network device.

Figure 35: Connecting a PTX1000 to a Network for Out-of-Band Management

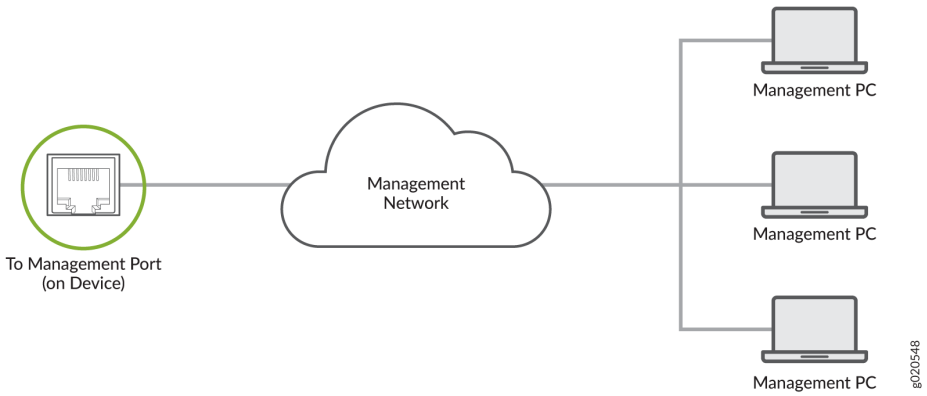

Connecting the PTX1000 to a Management Console

Ensure that you have an RJ-45 to DB-9 rollover cable available. An RJ-45 cable with an RJ-45 to DB-9 adapter is provided with the PTX1000.

> **NOTE**: If your laptop or PC does not have a DB-9 plug connector pin and you want to connect your laptop or PC directly to the PTX1000, use a combination of the RJ-45 cable and RJ-45 to

DB-9 adapter supplied with the router and a USB to DB-9 plug adapter. You must provide the USB to DB-9 plug adapter.

The PTX1000 has a console port with an RJ-45 connector. Use the console port to connect the router directly to a management console, such as a laptop, or to a console server.

To connect the PTX1000 to a management console (see Figure 36 on page 85 or Figure 37 on page 85):

1. Connect one end of the Ethernet cable to the console port (labeled **CON**).
2. Connect the other end of the Ethernet cable directly to a management console or console server.

Figure 36: Connecting the PTX1000 Directly to a Management Console

Figure 37: Connecting the PTX1000 to a Management Console Through a Console Server

RELATED DOCUMENTATION

PTX1000 Management Panel | **19**

Performing the Initial Software Configuration for the PTX1000

Before you begin connecting and configuring a PTX1000, set the following parameter values on the management console or console server:

- Baud Rate—9600
- Flow Control—None
- Data—8
- Parity—None
- Stop Bits—1
- DCD State—Disregard

You must perform the initial configuration of the PTX1000 through the console port by using the Junos OS command-line interface (CLI).

To connect and configure the PTX1000 from the console:

1. Connect the console port to a laptop or PC by using the supplied RJ-45 cable and RJ-45 to DB-9 adapter. The console port (labeled **CON**) is located on the management panel of the PTX1000 (see "Connecting the PTX1000 to a Management Console" on page 84 for more information).
2. Log in as **root**. There is no password. If the software boots before you connected to the console port, you might need to press the **Enter** key for the prompt to appear.

   ```
   login: root
   ```

3. Start the CLI.

   ```
   root@% cli
   ```

4. Enter configuration mode.

   ```
   root> configure
   ```

5. Add a password to the root administration user account.

```
[edit]
root@# set system root-authentication plain-text-password
New password: password
Retype new password: password
```

6. (Optional) Configure the name of the PTX1000. If the name includes spaces, enclose the name in quotation marks (“ ”).

```
[edit]
root@# set system host-name host-name
```

7. Configure the default gateway.

```
[edit]
root@# set routing-options static route default next-hop address
```

8. Configure the IP address and prefix length for the management interface.

```
[edit]
root@# set interfaces em0 unit 0 family inet address address/prefix-length
```

CAUTION: Although the CLI permits you to configure two management Ethernet interfaces within the same subnet, only one interface is usable and supported at a time.

NOTE: The RJ-45 management port `em0` and SFP management port `em2` are both labeled **MGMT**.

9. (Optional) Configure the static routes to remote prefixes with access to the management port.

```
[edit]
root@# set routing-options static route remote-prefix next-hop destination-ip retain no-readvertise
```

10. Enable the Telnet service.

```
[edit]
root@# set system services telnet
```

> **NOTE**: When Telnet is enabled, you cannot log in to a PTX1000 through Telnet by using root credentials. Root login is allowed only for SSH access.

11. Commit the configuration to activate it on the PTX1000.

```
[edit]
root@# commit
```

RELATED DOCUMENTATION

Console Port Connector Pinouts for the PTX1000 | 63

Powering Off the PTX1000

Before you power off a PTX1000:

- Ensure that you have taken the necessary precautions to prevent electrostatic discharge (ESD) damage. See *Prevention of Electrostatic Discharge Damage*.
- Ensure that you do not need to route traffic through the PTX1000.
- Ensure that you have the following parts and tools available to power off the PTX1000:
  - An ESD grounding strap
  - An external management device such as a PC
  - An RJ-45 to DB-9 rollover cable to connect the external management device to the console port

To power off a PTX1000:

1. Connect to the router by using one of the following methods:

- Connect a management device to the console (**CON**) port on a PTX1000 by following the instructions in "Connecting the PTX1000 to a Management Console" on page 84.
- Connect a management device to one of the two management (**MGMT**) ports by following the instructions in "Connecting the PTX1000 to a Management Ethernet Device" on page 83.

2. Shut down Junos OS from the external management device by issuing the `request vmhost halt` operational mode CLI command. This command shuts down Junos OS gracefully and preserves system state information. A message appears on the console, confirming that the operating system has halted.

```
user@host> request vmhost halt
Halt the system ? [yes,no] (no) yes
```

You see the following output (or something similar) after entering the command:

```
Initiating vmhost halt... ok
Initiating Junos shutdown...  shutdown: [pid 14318]
Shutdown NOW!
ok
Junos shutdown is in progress...
*** FINAL System shutdown message  ***

System going down IMMEDIATELY


...
...
Operating system  halted.
Please press any key to reboot.
```

> **CAUTION**: Although traffic and the operating system have stopped, the PTX1000 PSM LEDs remain lit and a fan module continues to run. Wait at least 60 seconds after first seeing this message before following the instructions in Step 4 and Step 5 to power off the PTX1000.

3.

4. Disconnect power to the PTX1000:

- AC power supply—If the AC power source outlet has a power switch, set it to the off (**O**) position. If the AC power source outlet does not have a power switch, gently pull out the plug end of the power cord connected to the power source outlet.

- DC power supply—Switch the circuit breaker on the panel board that services the DC circuit to the off position.

5. Remove the power source cable from the power supply faceplate:
   - AC power supply—Gently pull out the socket end of the power plug connected to the power supply faceplate.
   - DC power supply—Loosen the thumb screws for the power cable. Gently pull out the socket end of the power plug connected to the power supply faceplate.

RELATED DOCUMENTATION

Uninstalling the PTX1000 | **104**

4

CHAPTER

Maintaining Components

Maintaining the PTX1000 Fan Modules | 92

Maintaining the PTX1000 Power Supplies | 94

Maintaining the PTX1000 Transceivers and Fiber-Optic Cables | 98

Uninstalling the PTX1000 | 104

Maintaining the PTX1000 Fan Modules

IN THIS SECTION

- Removing a Fan Module from the PTX1000 | 92
- Installing a Fan Module in the PTX1000 | 93

Removing a Fan Module from the PTX1000

Before you remove a fan module from a PTX1000, ensure that you have taken the necessary precautions to prevent electrostatic discharge (ESD) damage (see *Prevention of Electrostatic Discharge Damage*).

Ensure that you have the following parts and tools available:

- ESD grounding strap
- Antistatic bag or an antistatic mat
- Phillips (+) screwdriver, number 1

The fan modules in a PTX1000 are hot-removable and hot-insertable field-replaceable units (FRUs)—you can remove and replace them without powering off the PTX1000 or disrupting routing functions.

> **CAUTION**: Replace the fan module within 30 seconds of removal to prevent chassis overheating. Before removing the fan module, ensure you have a replacement fan module available.

To remove a fan module from a PTX1000 (see Figure 38 on page 93):

1. Place the antistatic bag or the antistatic mat on a flat, stable surface.
2.
3. Using the Phillips screwdriver, loosen the locking screw (3 or 4 turns).
4. Grasp the handle on the fan module and squeeze the outside of the handle to release the module.

> **WARNING**: To avoid injury, do not touch the fan with your hands or any tools as you slide the fan module out of the chassis—the fan might still be running.

5. Pull firmly to slide the fan module halfway out of the chassis.
6. When the fan stops spinning, slide the fan module completely out of the chassis.
7. Place the fan module in the antistatic bag or on the antistatic mat placed on a flat, stable surface.

Figure 38: Removing a Fan Module from a PTX1000

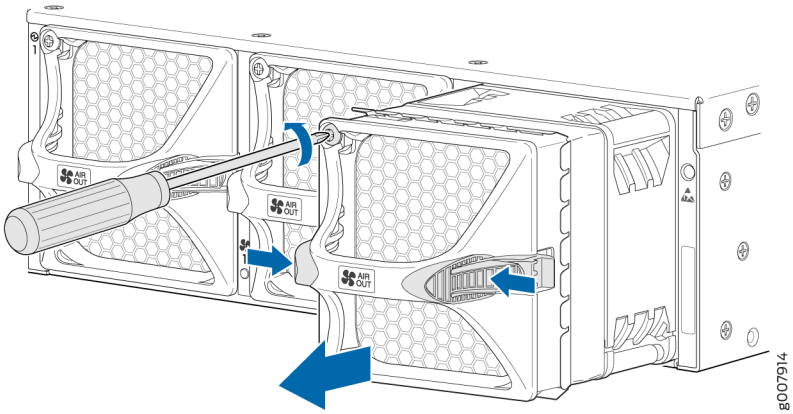

> **NOTE**: When a fan module is removed, the CLI message `Fan/Blower is Absent` is logged in the system log, and the system raises a minor alarm.

Installing a Fan Module in the PTX1000

Before you install a fan module in a PTX1000, ensure that you have taken the necessary precautions to prevent electrostatic discharge (ESD) damage (see *Prevention of Electrostatic Discharge Damage*).

Ensure that you have the following parts and tools available:

- ESD grounding strap
- #1 Phillips (+) screwdriver, number 1

The fan modules in a PTX1000 are hot-removable and hot-insertable field-replaceable units (FRUs)—you can remove and replace them without powering off the PTX1000 or disrupting routing functions.

CAUTION: Replace the fan module within 30 seconds of removal to prevent chassis overheating. Before removing the fan module, ensure you have a replacement fan module available.

NOTE: The fan module provides airflow out, which is also known as *port-to-FRU* airflow.

To install a fan module in a PTX1000 (see Figure 39 on page 94):

1.
2. Taking care not to touch the connectors, remove the fan module from its bag.
3. Align the module with the open slot on the FRU end of the PTX1000 and slide it in until it is fully seated.
4. Using the Phillips screwdriver, tighten the locking screw (3 or 4 turns).

Figure 39: Installing a Fan Module in a PTX1000

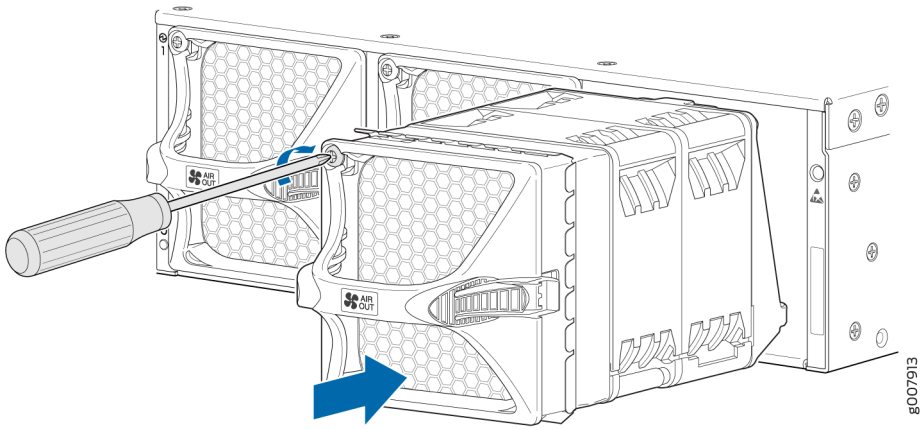

Maintaining the PTX1000 Power Supplies

IN THIS SECTION

Removing a Power Supply from the PTX1000 | 95

Installing a Power Supply in a PTX1000 | 96

Removing a Power Supply from the PTX1000

Before you remove a power supply from a PTX1000, ensure that you have taken the necessary precautions to prevent electrostatic discharge (ESD) damage (see *Prevention of Electrostatic Discharge Damage*).

Ensure that you have the following parts and tools available:

- ESD grounding strap
- Antistatic bag or an antistatic mat

The power supplies in a PTX1000 are hot-removable and hot-insertable field-replaceable units (FRUs)—you can remove and replace them without powering off the PTX1000 or disrupting routing functions.

> **CAUTION**: Replace the power supply within 30 seconds of removal to prevent chassis overheating. Before removing the power supply, ensure you have a replacement power supply available.

> **CAUTION**: Do not mix AC and DC power supplies in the same chassis.

To remove a power supply from a PTX1000 (see Figure 40 on page 96):

1. Place the antistatic bag or the antistatic mat on a flat, stable surface.
2.
3. Disconnect power to the PTX1000:
   - AC power supply—If the AC power source outlet has a power switch, set it to the off (**O**) position. If the AC power source outlet does not have a power switch, gently pull out the plug end of the power cord connected to the power source outlet.
   - DC power supply—Switch the circuit breaker on the panel board that services the DC circuit to the off position.

> **NOTE**: If you need to remove all the power supplies installed in your PTX1000, you must power off the PTX1000 before removing the power supplies. See "Powering Off the PTX1000" on page 88.

4. Remove the power source cable from the power supply faceplate:
   - AC power supply—Gently pull out the socket end of the power plug connected to the power supply faceplate.
   - DC power supply—Loosen the thumb screws for the power cable. Gently pull out the socket end of the power plug connected to the power supply faceplate.
5. Slide the locking lever toward the handle until it stops.
6. Grasp the power supply handle and pull firmly to slide the power supply halfway out of the chassis.
7. Place one hand under the power supply to support it and slide it completely out of the chassis. Take care not to touch power supply components, pins, leads, or solder connections.

Figure 40: Removing a Power Supply from a PTX1000

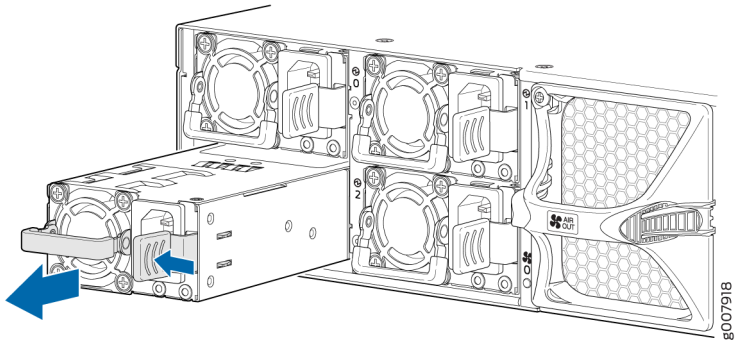

8. Place the power supply in the antistatic bag or on the antistatic mat placed on a flat, stable surface.

Installing a Power Supply in a PTX1000

- Before you install a power supply in a PTX1000, ensure that you have taken the necessary precautions to prevent electrostatic discharge (ESD) damage (see *Prevention of Electrostatic Discharge Damage*).
- Ensure that you have an ESD grounding strap.
- If the power supply has protective plastic wrap, peel and remove the plastic wrap from all four sides of the power supply.

The power supplies in a PTX1000 are hot-removable and hot-insertable field-replaceable units (FRUs)—you can remove and replace them without powering off the PTX1000 or disrupting routing functions.

CAUTION: Replace the power supply within 30 seconds of removal to prevent chassis overheating. Before removing the power supply, ensure you have a replacement power supply available.

CAUTION: Do not mix AC and DC power supplies in the same chassis.

To install a power supply in a PTX1000 (see Figure 41 on page 97):

1.
2. Taking care not to touch power supply components, pins, leads, or solder connections, remove the power supply from its bag.
3. Using both hands, place the power supply in the power supply slot on the FRU panel of the PTX1000 and slide it in until it is fully seated and the locking lever slides into place.

Figure 41: Installing a Power Supply in a PTX1000

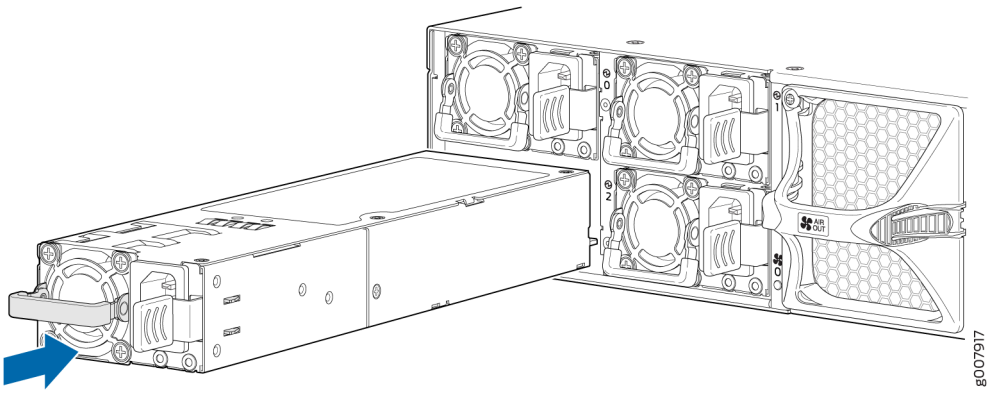

NOTE: Each power supply must be connected to a dedicated power source outlet.

NOTE: If you have a Juniper Care service contract, register any addition, change, or upgrade of hardware components at https://www.juniper.net/customers/support/tools/updateinstallbase/ .

Failure to do so can result in significant delays if you need replacement parts. This note does not apply if you replace existing components with the same type of component.

Maintaining the PTX1000 Transceivers and Fiber-Optic Cables

IN THIS SECTION

- Removing a Transceiver from the PTX1000 | **98**
- Installing a Transceiver in the PTX1000 | **100**
- Disconnecting a Fiber-Optic Cable from the PTX1000 | **101**
- Connecting a Fiber-Optic Cable to the PTX1000 | **102**
- Maintaining Fiber-Optic Cables in a PTX1000 | **103**

Removing a Transceiver from the PTX1000

Before you begin removing a transceiver from a PTX1000, ensure that you have taken the necessary precautions for safe handling of lasers (see *Radiation from Open Port Apertures Warning* and *Laser and LED Safety Guidelines and Warnings*).

Ensure that you have the following parts and tools available:

- Antistatic bag or an antistatic mat
- Needlenose pliers
- Rubber safety caps to cover the transceiver and fiber-optic cable connector
- Dust cover to cover the port

The transceivers for the PTX1000 are hot-removable and hot-insertable field-replaceable units (FRUs)—you can remove and replace them without powering off the PTX1000 or disrupting routing functions.

To remove a transceiver from a PTX1000:

1. Place the antistatic bag or antistatic mat on a flat, stable surface.
2. Label the cable connected to the transceiver so that you can reconnect it correctly.

> **LASER WARNING**: Do not look directly into a fiber-optic transceiver or into the ends of fiber-optic cables. Fiber-optic transceivers and fiber-optic cables connected to transceivers emit laser light that can damage your eyes.

> **LASER WARNING**: Do not leave a fiber-optic transceiver uncovered except when inserting or removing a cable. The rubber safety cap keeps the port clean and prevents accidental exposure to laser light.

> **CAUTION**: Do not bend fiber-optic cables beyond their minimum bend radius. Bending the cables beyond their minimum bend radius can damage the cables and cause problems that are difficult to diagnose.

3. Remove the cable connected to the transceiver (see "Disconnecting a Fiber-Optic Cable from the PTX1000" on page 101). Cover the transceiver and the end of each fiber-optic cable connector with a rubber safety cap immediately after disconnecting the fiber-optic cables.
4. Using your fingers, pull the ejector lever away from the transceiver to unlock the transceiver.

> **CAUTION**: Before removing the transceiver, make sure you open the ejector lever completely until you hear it click. Doing this prevents damage to the transceiver.

5. Grasp the transceiver ejector lever and gently slide the transceiver approximately 0.5 in. (1.3 cm) straight out of the port.

> **CAUTION**: To avoid electrostatic discharge (ESD) damage to the transceiver, do not touch the connector pins at the end of the transceiver.

6. Using your fingers, grasp the body of the transceiver and pull it straight out of the port (see Figure 42 on page 100).
7. Place the transceiver in the antistatic bag or on the antistatic mat placed on a flat, stable surface.

8. Place the dust cover over the empty port.

Figure 42: Removing a Transceiver from the PTX1000

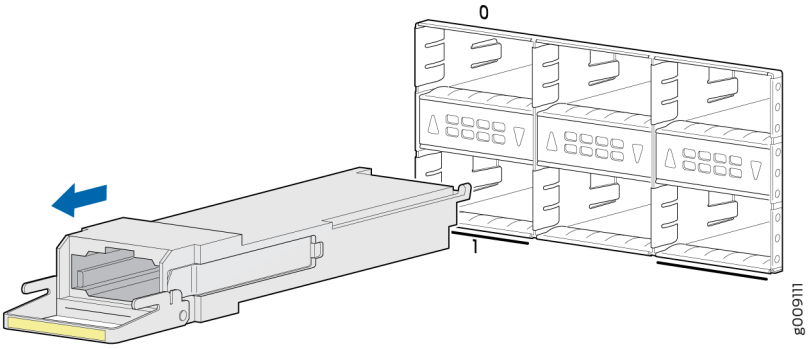

Installing a Transceiver in the PTX1000

Before you begin installing a transceiver in a PTX1000, ensure that you have taken the necessary precautions for safe handling of lasers (see *Radiation from Open Port Apertures Warning* and *Laser and LED Safety Guidelines and Warnings*).

Ensure that you have a rubber safety cap available to cover the transceiver.

The transceivers for the PTX1000 are hot-removable and hot-insertable field-replaceable units (FRUs)—you can remove and replace them without powering off the PTX1000 or disrupting routing functions.

To install a transceiver in a PTX1000:

> **CAUTION**: To avoid electrostatic discharge (ESD) damage to the transceiver, do not touch the connector pins at the end of the transceiver.

1. Remove the transceiver from its bag.
2. Check to see whether the transceiver is covered by a rubber safety cap. If it is not, cover the transceiver with a rubber safety cap.

> **LASER WARNING**: Do not leave a fiber-optic transceiver uncovered except when inserting or removing a cable. The rubber safety cap keeps the port clean and prevents accidental exposure to laser light.

3. If the port in which you want to install the transceiver is covered with a dust cover, remove the dust cover and save it in case you need to cover the port later.
4. Using both hands, carefully place the transceiver in the empty port. The connectors must face the PTX1000 chassis.

> **CAUTION**: Before you slide the transceiver into the port, ensure that the transceiver is aligned correctly. Misalignment might cause the pins to bend, making the transceiver unusable.

5. Slide the transceiver in gently until it is fully seated (see Figure 43 on page 101).
6. Remove the rubber safety cap when you are ready to connect a cable to the transceiver.

> **LASER WARNING**: Do not look directly into a fiber-optic transceiver or into the ends of fiber-optic cables. Fiber-optic transceivers and fiber-optic cables connected to transceivers emit laser light that can damage your eyes.

Figure 43: Installing a Transceiver in the PTX1000

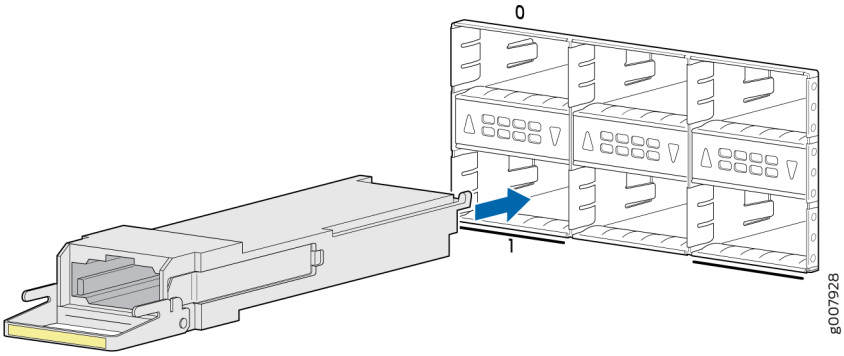

Disconnecting a Fiber-Optic Cable from the PTX1000

Before you disconnect a fiber-optic cable from a PTX1000, ensure that you have taken the necessary precautions for safe handling of lasers (see *Radiation from Open Port Apertures Warning* and *Laser and LED Safety Guidelines and Warnings*).

Ensure that you have the following parts and tools available:

- Rubber safety cap to cover the transceiver

- Rubber safety cap to cover the fiber-optic cable connector

The PTX1000 has optical transceivers to which you can connect fiber-optic cables.

To disconnect a fiber-optic cable from an optical transceiver installed in the PTX1000:

1. (Recommended) Disable the port in which the transceiver is installed by including the `disable` statement at the `[edit interfaces]` hierarchy level for the specific interface:

```
[edit interfaces]
set interface-name disable
```

> **LASER WARNING**: Do not look directly into a fiber-optic transceiver or into the ends of fiber-optic cables. Fiber-optic transceivers and fiber-optic cables connected to transceivers emit laser light that can damage your eyes.

> **LASER WARNING**: Do not stare into the laser beam or view it directly with optical instruments even if the interface has been disabled.

2. Carefully unplug the fiber-optic cable connector from the transceiver.
3. Cover the transceiver with a rubber safety cap.

> **LASER WARNING**: Do not leave a fiber-optic transceiver uncovered except when inserting or removing a cable. The rubber safety cap keeps the port clean and prevents accidental exposure to laser light.

4. Cover the fiber-optic cable connector with the rubber safety cap.

Connecting a Fiber-Optic Cable to the PTX1000

Before you connect a fiber-optic cable to a PTX1000, ensure that you have taken the necessary precautions for safe handling of lasers (see *Radiation from Open Port Apertures Warning* and *Laser and LED Safety Guidelines and Warnings*).

The PTX1000 has optical transceivers to which you can connect fiber-optic cables.

To connect a fiber-optic cable to an optical transceiver installed in the PTX1000:

LASER WARNING: Do not look directly into a fiber-optic transceiver or into the ends of fiber-optic cables. Fiber-optic transceivers and fiber-optic cables connected to transceivers emit laser light that can damage your eyes.

LASER WARNING: Do not stare into the laser beam or view it directly with optical instruments even if the interface has been disabled.

1. If the fiber-optic cable connector is covered by a rubber safety cap, remove the cap. Save the cap.
2. If the optical transceiver is covered by a rubber safety cap, remove the cap. Save the cap.
3. Insert the cable connector into the optical transceiver.
4. Secure the cable so that it does not support its own weight. Place excess cable out of the way in a neatly coiled loop. Placing fasteners on a loop helps cables maintain their shape.

   CAUTION: Do not bend fiber-optic cables beyond their minimum bend radius. Bending the cables beyond their minimum bend radius can damage the cables and cause problems that are difficult to diagnose.

   CAUTION: Do not let fiber-optic cables hang free from the connector. Do not allow fastened loops of cables to dangle, which stresses the cables at the fastening point.

Maintaining Fiber-Optic Cables in a PTX1000

To maintain fiber-optic cables in a PTX1000:

- When you unplug fiber-optic cables from transceivers, place rubber safety caps over the transceivers and on the end of the cables.
- Anchor fiber-optic cables to avoid stress on the connectors. When attaching a fiber-optic cable to a transceiver, be sure to secure the fiber-optic cable so that it does not support its own weight as it hangs to the floor. Never let a fiber-optic cable hang free from the connector.
- Do not bend fiber-optic cables beyond their minimum bend radius. Bending the cables beyond their minimum bend radius can damage the cables and cause problems that are difficult to diagnose.

- Frequent plugging and unplugging of fiber-optic cables in and out of optical instruments can damage the instruments, which are expensive to repair. Attach a short fiber extension to the optical equipment. Any wear and tear due to frequent plugging and unplugging is then absorbed by the short fiber extension, which is easier and less expensive to replace than the instruments.

- Keep fiber-optic cable connections clean. Microdeposits of oil and dust in the canal of the transceiver or cable connector can cause loss of light, reduction in signal power, and possibly intermittent problems with the optical connection.

  To clean the transceiver canal, use an appropriate fiber-cleaning device such as RIFOCS Fiber Optic Adaptor Cleaning Wands (part number 946). Follow the directions in the cleaning kit you use.

  After cleaning the transceiver, make sure that the connector tip of the fiber-optic cable is clean. Use only an approved alcohol-free fiber-optic cable cleaning kit such as the Cletop-S® Fiber Cleaner. Follow the directions in the cleaning kit you use.

Uninstalling the PTX1000

Before removing a PTX1000 from a rack:

Ensure that you have the following parts and tools available:

- Either a mechanical lift or two persons to support the weight of the PTX1000. An additional person is needed to remove the screws securing the router to the rack.

- Screwdriver appropriate for your rack-mounting screws.

If you need to relocate an installed PTX1000, perform the following procedure.

> **NOTE**: When you remove multiple devices from a rack, remove the device at the top of the rack first and proceed to remove the rest of the devices from top to bottom to avoid toppling the rack.

- Ensure that the rack is stable and secured to the building.

- Ensure that there is enough space to place the removed PTX1000 in its new location and along the path to the new location.

- Read *General Safety Guidelines and Warnings*, "PTX1000 Installation Safety Guidelines" on page 67, and *Chassis and Component Lifting Guidelines*.

- Power off the device (see "Powering Off the PTX1000" on page 88).

- Ensure that you have disconnected any cables or wires attached to the PTX1000 (see "Disconnecting a Fiber-Optic Cable from the PTX1000" on page 101).

To remove a PTX1000 from a rack:

1. Perform one of the following steps:
   - Position a mechanical lift under the PTX1000. Use the screwdriver to remove the front-mounting screws that attach the router to the rack.
   - Have two persons support the weight of the PTX1000 while another person uses the screwdriver to remove the front-mounting screws that attach the router to the rack.
2. Remove the PTX1000 from the rack.
3. Use the screwdriver to remove the mounting screws that attach the rear-mounting blades to the rear of the rack.
4. Place the removed screws and rear-mounting blades in a labeled bag. You will need them when you reinstall the chassis.
5. Transport the PTX1000 to your desired new location.

RELATED DOCUMENTATION

Mounting the PTX1000 in a Rack | 69

5

CHAPTER

Troubleshooting Hardware

Troubleshooting the PTX1000 | 107

Troubleshooting the PTX1000

IN THIS SECTION

- PTX1000 Troubleshooting Resources Overview | 107
- PTX1000 Alarm Messages Overview | 108
- Chassis Alarm Messages on the PTX1000 | 108

PTX1000 Troubleshooting Resources Overview

To troubleshoot a PTX1000, you use the Junos OS CLI, alarms, and LEDs on the network ports, management panel, and components.

- LEDs—When the Routing Engine detects an alarm condition, it lights the red or yellow alarm LED on the management panel as appropriate. In addition, you can also use component LEDs and network port LEDs to troubleshoot the PTX1000. For more information, see the following topics:
  - "PTX1000 Chassis Status LEDs" on page 22
  - "PTX1000 Management Port LEDs " on page 21
  - "PTX1000 Network Port LEDs" on page 17
  - "PTX1000 Fan Module LEDs" on page 26
  - "PTX1000 Power Supply LEDs" on page 31
- CLI—The CLI is the primary tool for controlling and troubleshooting hardware, Junos OS, routing protocols, and network connectivity. CLI commands display information from routing tables, information specific to routing protocols, and information about network connectivity derived from the ping and traceroute utilities. For information about using the CLI to troubleshoot Junos OS, see the appropriate Junos OS configuration guide.
- JTAC—If you need assistance during troubleshooting, you can contact the Juniper Networks Technical Assistance Center (JTAC) by using the Web or by telephone. If you encounter software problems, or problems with hardware components not discussed here, contact JTAC.

PTX1000 Alarm Messages Overview

When the Routing Engine detects an alarm condition, it lights the red or yellow alarm LED on the management panel as appropriate. To view a more detailed description of the alarm cause, issue the `show chassis alarms` CLI command:

```
user@host> show chassis alarms
2 alarms currently active
Alarm time               Class  Description
2017-01-23 02:39:29 PST  Major  PEM 3 Not Present
2017-01-23 02:39:29 PST  Major  PEM 1 Not Present
```

Chassis Alarm Messages on the PTX1000

Chassis alarms indicate a failure on the device or one of its components. Chassis alarms are preset and cannot be modified.

Chassis alarms on PTX1000 routers have two severity levels:

- Major (red)—Indicates a critical situation on the device that has resulted from one of the conditions described in Table 29 on page 108. A red alarm condition requires immediate action.
- Minor (yellow or amber)—Indicates a noncritical condition on the device that, if left unchecked, might cause an interruption in service or degradation in performance. A yellow alarm condition requires monitoring or maintenance.

Table 29 on page 108 describes the chassis alarm messages on the PTX1000.

Table 29: PTX1000 Chassis Alarm Messages

Component	Alarm Type	CLI Message	Recommended Action
Fans	Major (red)	`Fan Failure`	Replace the fan module and report the failure to customer support.

Table 29: PTX1000 Chassis Alarm Messages *(Continued)*

Component	Alarm Type	CLI Message	Recommended Action
		`Fan I2C Failure`	Check the system log for one of the following messages and report the error message to customer support: • `CM ENV Monitor: Get fan speed failed.` • *`fan-number`* `is NOT spinning @ correct speed`, where *`fan-number`* can be 1, 2, or 3.
		`Fan` *`fan-number`* `Not Spinning`	Remove and check the fan module for obstructions, and then reinsert the fan module. If the problem persists, replace the fan module.
	Minor (yellow)	`Fan/Blower Absent`	Check the system log for the message *`fan-number`* `Absent`, where *`fan-number`* can be 1, 2, or 3. Install the fan module.
Power supplies	Major (red)	`PEM` *`pem-number`* `Airflow not matching Chassis Airflow`	Replace the power supply with a power supply that supports the same airflow direction as the chassis.
		`PEM` *`pem-number`* `I2C Failure`	Check the system log for one of the following messages and report the error message to customer support: • `I2C Read failed for device` *`number`*, where *`number`* may be from 123 to 125. • `PS` *`number`*`: Transitioning from online to offline`, where power supply (PS) *`number`* may be 1, 2, 3, or 4.

Table 29: PTX1000 Chassis Alarm Messages *(Continued)*

Component	Alarm Type	CLI Message	Recommended Action
		PEM *pem-number* is not powered	Check the power cord connection and reconnect, if necessary.
		PEM *pem-number* is not supported	Replace the power supply with a supported power supply.
		PEM *pem-number* Not OK	Indicates a problem with the incoming AC power or outgoing DC power. Report the error to customer support.
	Minor (yellow)	PEM *pem-number* Absent	A power supply is not installed. Install a supported power supply in the appropriate slot.
		PEM *pem-number* Power Supply Type Mismatch	Check if there is a mix of AC and DC power supplies in the same chassis. Reboot the device with only AC or only DC power supplies.
		PEM *pem-number* Removed	Replace the removed power supply.
Temperature sensors	Major (red)	*sensor-location* Temp Sensor Fail	Check the system log for the following message and report it to customer support: Temp sensor *sensor-number* failed, where *sensor-number* ranges from 1 through 10.

Table 29: PTX1000 Chassis Alarm Messages *(Continued)*

Component	Alarm Type	CLI Message	Recommended Action
		sensor-location Temp Sensor Too Hot	Check environmental conditions and alarms on other devices. Ensure that environmental factors (such as hot air blowing around the equipment) do not affect the temperature sensor. If the condition persists, the device might shut down.
	Minor (yellow)	*sensor-location* Temp Sensor Too Warm	For information only. Check environmental conditions and alarms on other devices. Ensure that environmental factors (such as hot air blowing around the equipment) do not affect the temperature sensor.
Routing Engine	Major (red)	RE *RE number* /var partition is full	Clean up the system file storage space on the device. For more information, see *request system storage cleanup*.
	Minor (yellow)	RE *RE number* /var partition usage is high	Clean up the system file storage space on the device. For more information, see *request system storage cleanup*.
Management Ethernet interface	Major (red)	Management Ethernet 1 Link Down	Check whether a cable is connected to the management Ethernet interface, or whether the cable is defective. Replace the cable, if required. If the problem cannot be resolved, open a support case.

RELATED DOCUMENTATION

PTX1000 Management Panel | **19**

Configuring Junos OS to Determine Conditions That Trigger Alarms on Different Interface Types

alarm

6

CHAPTER

Returning the Chassis or Components

Returning the PTX1000 Chassis or Components | 114

Returning the PTX1000 Chassis or Components

IN THIS SECTION

- Locating the Serial Number on a PTX1000 Chassis or Component | 114
- Contact Customer Support to Obtain Return Material Authorization | 116
- Packing a PTX1000 Chassis or Component for Shipping | 117

Locating the Serial Number on a PTX1000 Chassis or Component

IN THIS SECTION

- Listing the Chassis and Component Details by Using the CLI | 115
- Locating the Chassis Serial Number ID Label on a PTX1000 | 116
- Locating the Serial Number ID Labels on FRU Components | 116

If you are returning a PTX1000 or a PTX1000 field-replaceable unit (FRU) to Juniper Networks for repair or replacement, you must locate the serial number of the router or FRU. You must provide the serial number to the Juniper Networks Technical Assistance Center (JTAC) when you contact them to obtain a Return Materials Authorization (RMA). See *Contact Customer Support to Obtain Return Material Authorization*.

If the PTX1000 is operational and you can access the command-line interface (CLI), you can list serial numbers for the router and some components with a CLI command. If you do not have access to the CLI or if the serial number for the FRU does not appear in the command output, you can locate the serial number ID label on the router or FRU.

NOTE: If you want to find the serial number ID label on a component, you need to remove the component from the chassis, for which you must have the required parts and tools available.

NOTE: You must remove the fan module to read the serial number from the serial number ID label. The fan module serial number cannot be viewed through the CLI.

Listing the Chassis and Component Details by Using the CLI

To list the PTX1000 and components and their serial numbers, use the `show chassis hardware` CLI operational mode command.

```
user@host> show chassis hardware

Hardware inventory:
Item             Version  Part number  Serial number     Description
Chassis                                DB665             PTX1000
Pseudo CB 0
Routing Engine 0          BUILTIN      BUILTIN           RE-PTX1000
FPC 0            REV 06   750-065110   ACMX7555          PTX1000-FPC-P2-BUILTIN
  CPU                     BUILTIN      BUILTIN           FPC CPU
  PIC 0                   BUILTIN      BUILTIN           288X10GE/72X40GE/24X100GE
    Xcvr 1       REV 01   740-032986   QB300994          QSFP+-40G-SR4
    Xcvr 2       REV 01   740-032986   QB491187          QSFP+-40G-SR4
    Xcvr 3       REV 01   740-046565   QE440568          QSFP+-40G-SR4
    Xcvr 4       REV 01   740-046565   QF2805JS          QSFP+-40G-SR4
    Xcvr 5       REV 01   740-046565   QE413802          QSFP+-40G-SR4
    Xcvr 6       REV 01   740-032986   QA470512          QSFP+-40G-SR4
    Xcvr 71      REV 01   740-061405   1ACQ104400S       100GBASE-SR4
  Mezz           REV 04   711-064764   ACMX2345          PTX1000 Mezz
Power Supply 0   REV 03   740-054405   1EDN5190265       AC AFO 1600W PSU
Power Supply 1   REV 03   740-054405   1EDN5190075       AC AFO 1600W PSU
Power Supply 2   REV 03   740-054405   1EDN5200472       AC AFO 1600W PSU
Power Supply 3   REV 03   740-054405   1EDN5200539       AC AFO 1600W PSU
Fan Tray 0                                               PTX1000 Fan Tray 0, Front to Back
Airflow - AFO
Fan Tray 1                                               PTX1000 Fan Tray 1, Front to Back
Airflow - AFO
Fan Tray 2                                               PTX1000 Fan Tray 2, Front to Back
Airflow - AFO
```

Locating the Chassis Serial Number ID Label on a PTX1000

The serial number ID label is located on a label on the top cover.

Locating the Serial Number ID Labels on FRU Components

For each FRU, you must remove the FRU from the chassis to see the FRU's serial number ID label.

- AC power supply—The serial number ID label is on the top of the AC power supply.
- DC power supply—The serial number ID label is on the top of the DC power supply.
- Fan module—The serial number ID label is on the top of the fan module.

Contact Customer Support to Obtain Return Material Authorization

If you are returning a device or hardware component to Juniper Networks for repair or replacement, obtain a Return Material Authorization (RMA) number from Juniper Networks Technical Assistance Center (JTAC).

After locating the serial number of the device or hardware component you want to return, open a service request with Juniper Networks Technical Assistance Center (JTAC) on the Web or by telephone.

Before you request an RMA number from JTAC, be prepared to provide the following information:

- Your existing service request number, if you have one
- Serial number of the component
- Your name, organization name, telephone number, fax number, and shipping address
- Details of the failure or problem
- Type of activity being performed on the device when the problem occurred
- Configuration data displayed by one or more `show` commands

You can contact JTAC 24 hours a day, seven days a week on the Web or by telephone:

- Service Request Manager: https://support.juniper.net/support
- Telephone: +1-888-314-JTAC (+1-888-314-5822), toll free in U.S., Canada, and Mexico

NOTE: For international or direct-dial options in countries without toll free numbers, see https://support.juniper.net/support

If you are contacting JTAC by telephone, enter your 12-digit service request number followed by the pound (#) key for an existing case, or press the star (*) key to be routed to the next available support engineer.

The support representative validates your request and issues an RMA number for return of the component.

Packing a PTX1000 Chassis or Component for Shipping

IN THIS SECTION

- Packing a PTX1000 for Shipping | **118**
- Packing PTX1000 Components for Shipping | **118**

If you are returning a PTX1000 or component to Juniper Networks for repair or replacement, pack the item as described in this topic.

Before you pack a PTX1000 or component:

- Ensure that you have taken the necessary precautions to prevent electrostatic discharge (ESD) damage. See *Prevention of Electrostatic Discharge Damage*.
- Retrieve the original shipping carton and packing materials. Contact your JTAC representative if you do not have these materials, to learn about approved packing materials (see *Contact Customer Support to Obtain Return Material Authorization*).

Ensure that you have the following parts and tools available:

- ESD grounding strap.
- Antistatic bag, one for each component.
- If you are returning the chassis, an appropriate screwdriver for the mounting screws used on your rack.

Packing a PTX1000 for Shipping

To pack a PTX1000 for shipping:

1. Power off the PTX1000 and remove the AC power cords or DC power cables. See "Powering Off the PTX1000" on page 88.
2. Remove the cables that connect the PTX1000 to all external devices. See "Disconnecting a Fiber-Optic Cable from the PTX1000" on page 101.
3. Remove all field-replaceable units (FRUs) from the router. See:
   - "Removing a Fan Module from the PTX1000" on page 92
   - "Removing a Power Supply from the PTX1000" on page 95
4. Remove the PTX1000 from the rack. See "Uninstalling the PTX1000" on page 104.
5. Place the PTX1000 in an antistatic bag.
6. Place the PTX1000 in the shipping carton.
7. Place the packing foam on top of and around the PTX1000.
8. If you are returning accessories or FRUs with the PTX1000, pack them as instructed in "Packing PTX1000 Components for Shipping" on page 118.
9. Close the top of the cardboard shipping box and seal it with packing tape.
10. Write the return materials authorization (RMA) number on the exterior of the box to ensure proper tracking. See *Contact Customer Support to Obtain Return Material Authorization* for instructions on obtaining an RMA number.

Packing PTX1000 Components for Shipping

CAUTION: Do not stack PTX1000 components. Return individual components in separate boxes if they do not fit together on one level in the shipping box.

To pack and ship PTX1000 components:

1. Place individual FRUs in antistatic bags.
2. Ensure that the components are adequately protected with packing materials and packed so that the pieces are prevented from moving around inside the carton.
3. Close the top of the cardboard shipping box and seal it with packing tape.
4. Write the RMA number on the exterior of the box to ensure proper tracking. See *Contact Customer Support to Obtain Return Material Authorization* for instructions on obtaining an RMA number.

7

CHAPTER

Safety and Compliance Information

PTX1000 General Electrical Safety Guidelines and Warnings | 121

Definitions of Safety Warning Levels | 122

Qualified Personnel Warning | 124

Warning Statement for Norway and Sweden | 124

Fire Safety Requirements | 125

Installation Instructions Warning | 126

Chassis and Component Lifting Guidelines | 127

Restricted Access Warning | 127

Ramp Warning | 129

Rack-Mounting and Cabinet-Mounting Warnings | 129

Grounded Equipment Warning | 133

Radiation from Open Port Apertures Warning | 134

Laser and LED Safety Guidelines and Warnings | 135

Maintenance and Operational Safety Guidelines and Warnings | 138

Action to Take After an Electrical Accident | 144

Prevention of Electrostatic Discharge Damage | 144

AC Power Electrical Safety Guidelines | 145

AC Power Disconnection Warning | 146

PTX1000 DC Power Electrical Safety Guidelines | 147

DC Power Copper Conductors Warning | 148

DC Power Disconnection Warning | 148

DC Power Grounding Requirements and Warning | 150

DC Power Wiring Sequence Warning | 151

DC Power Wiring Terminations Warning | 152

Multiple Power Supplies Disconnection Warning | 154

TN Power Warning | 154

PTX1000 Agency Approvals and Compliance Statements | 155

PTX1000 Compliance Statements for Acoustic Noise | 159

PTX1000 General Electrical Safety Guidelines and Warnings

WARNING: Certain ports on the device are designed for use as intrabuilding (within-the-building) interfaces only (Type 2 or Type 4 ports as described in *GR-1089-CORE*) and require isolation from the exposed outside plant (OSP) cabling. The intrabuilding ports on the device are suitable for connection to intrabuilding or unexposed wiring or cabling only. The addition of primary protectors is not sufficient protection for connecting these interfaces metallically to OSP wiring.

CAUTION: Before removing or installing components of a device, connect an electrostatic discharge (ESD) grounding strap to an ESD point and wrap and fasten the other end of the strap around your bare wrist. Failure to use an ESD grounding strap could result in damage to the device.

- Install the device in compliance with the following local, national, and international electrical codes:
  - United States—National Fire Protection Association (NFPA 70), United States National Electrical Code.
  - Other countries—International Electromechanical Commission (IEC) 60364, Part 1 through Part 7.
  - Evaluated to the TN power system.
  - Canada—Canadian Electrical Code, Part 1, CSA C22.1.
  - Suitable for installation in Information Technology Rooms in accordance with Article 645 of the National Electrical Code and NFPA 75.

    Peut être installé dans des salles de matériel de traitement de l'information conformément à l'article 645 du National Electrical Code et à la NFPA 75.
- Locate the emergency power-off switch for the room in which you are working so that if an electrical accident occurs, you can quickly turn off the power.
- Make sure that grounding surfaces are cleaned and brought to a bright finish before grounding connections are made.
- Do not work alone if potentially hazardous conditions exist anywhere in your workspace.
- Never assume that power is disconnected from a circuit. Always check the circuit before starting to work.

- Carefully look for possible hazards in your work area, such as moist floors, ungrounded power extension cords, and missing safety grounds.
- Operate the device within marked electrical ratings and product usage instructions.
- To ensure that the device and peripheral equipment function safely and correctly, use the cables and connectors specified for the attached peripheral equipment, and make certain they are in good condition.

You can remove and replace many device components without powering off or disconnecting power to the device, as detailed elsewhere in the hardware documentation for this device. Never install equipment that appears to be damaged.

Definitions of Safety Warning Levels

The documentation uses the following levels of safety warnings (there are two *Warning* formats):

NOTE: You might find this information helpful in a particular situation, or you might overlook this important information if it was not highlighted in a Note.

CAUTION: You need to observe the specified guidelines to prevent minor injury or discomfort to you or severe damage to the device.

Attention Veillez à respecter les consignes indiquées pour éviter toute incommodité ou blessure légère, voire des dégâts graves pour l'appareil.

LASER WARNING: This symbol alerts you to the risk of personal injury from a laser.

Avertissement Ce symbole signale un risque de blessure provoquée par rayon laser.

WARNING: This symbol means danger. You are in a situation that could cause bodily injury. Before you work on any equipment, be aware of the hazards involved with electrical circuitry and be familiar with standard practices for preventing accidents.

Waarschuwing Dit waarschuwingssymbool betekent gevaar. U verkeert in een situatie die lichamelijk letsel kan veroorzaken. Voordat u aan enige apparatuur gaat werken,

dient u zich bewust te zijn van de bij elektrische schakelingen betrokken risico's en dient u op de hoogte te zijn van standaard maatregelen om ongelukken te voorkomen.

Varoitus Tämä varoitusmerkki merkitsee vaaraa. Olet tilanteessa, joka voi johtaa ruumiinvammaan. Ennen kuin työskentelet minkään laitteiston parissa, ota selvää sähkökytkentöihin liittyvistä vaaroista ja tavanomaisista onnettomuuksien ehkäisykeinoista.

Avertissement Ce symbole d'avertissement indique un danger. Vous vous trouvez dans une situation pouvant causer des blessures ou des dommages corporels. Avant de travailler sur un équipement, soyez conscient des dangers posés par les circuits électriques et familiarisez-vous avec les procédures couramment utilisées pour éviter les accidents.

Warnung Dieses Warnsymbol bedeutet Gefahr. Sie befinden sich in einer Situation, die zu einer Körperverletzung führen könnte. Bevor Sie mit der Arbeit an irgendeinem Gerät beginnen, seien Sie sich der mit elektrischen Stromkreisen verbundenen Gefahren und der Standardpraktiken zur Vermeidung von Unfällen bewußt.

Avvertenza Questo simbolo di avvertenza indica un pericolo. La situazione potrebbe causare infortuni alle persone. Prima di lavorare su qualsiasi apparecchiatura, occorre conoscere i pericoli relativi ai circuiti elettrici ed essere al corrente delle pratiche standard per la prevenzione di incidenti.

Advarsel Dette varselsymbolet betyr fare. Du befinner deg i en situasjon som kan føre til personskade. Før du utfører arbeid på utstyr, må du vare oppmerksom på de faremomentene som elektriske kretser innebærer, samt gjøre deg kjent med vanlig praksis når det gjelder å unngå ulykker.

Aviso Este símbolo de aviso indica perigo. Encontra-se numa situação que lhe poderá causar danos físicos. Antes de começar a trabalhar com qualquer equipamento, familiarize-se com os perigos relacionados com circuitos eléctricos, e com quaisquer práticas comuns que possam prevenir possíveis acidentes.

¡Atención! Este símbolo de aviso significa peligro. Existe riesgo para su integridad física. Antes de manipular cualquier equipo, considerar los riesgos que entraña la corriente eléctrica y familiarizarse con los procedimientos estándar de prevención de accidentes.

Varning! Denna varningssymbol signalerar fara. Du befinner dig i en situation som kan leda till personskada. Innan du utför arbete på någon utrustning måste du vara medveten om farorna med elkretsar och känna till vanligt förfarande för att förebygga skador.

Qualified Personnel Warning

WARNING: Only trained and qualified personnel should install or replace the device.

Waarschuwing Installatie en reparaties mogen uitsluitend door getraind en bevoegd personeel uitgevoerd worden.

Varoitus Ainoastaan koulutettu ja pätevä henkilökunta saa asentaa tai vaihtaa tämän laitteen.

Avertissement Tout installation ou remplacement de l'appareil doit être réalisé par du personnel qualifié et compétent.

Warnung Gerät nur von geschultem, qualifiziertem Personal installieren oder auswechseln lassen.

Avvertenza Solo personale addestrato e qualificato deve essere autorizzato ad installare o sostituire questo apparecchio.

Advarsel Kun kvalifisert personell med riktig opplæring bør montere eller bytte ut dette utstyret.

Aviso Este equipamento deverá ser instalado ou substituído apenas por pessoal devidamente treinado e qualificado.

¡Atención! Estos equipos deben ser instalados y reemplazados exclusivamente por personal técnico adecuadamente preparado y capacitado.

Varning! Denna utrustning ska endast installeras och bytas ut av utbildad och kvalificerad personal.

Warning Statement for Norway and Sweden

WARNING: The equipment must be connected to an earthed mains socket-outlet.

Advarsel Apparatet skal kobles til en jordet stikkontakt.

Varning! Apparaten skall anslutas till jordat nätuttag.

Fire Safety Requirements

IN THIS SECTION

- Fire Suppression | 125
- Fire Suppression Equipment | 125

In the event of a fire emergency, the safety of people is the primary concern. You should establish procedures for protecting people in the event of a fire emergency, provide safety training, and properly provision fire-control equipment and fire extinguishers.

In addition, you should establish procedures to protect your equipment in the event of a fire emergency. Juniper Networks products should be installed in an environment suitable for electronic equipment. We recommend that fire suppression equipment be available in the event of a fire in the vicinity of the equipment and that all local fire, safety, and electrical codes and ordinances be observed when you install and operate your equipment.

Fire Suppression

In the event of an electrical hazard or an electrical fire, you should first turn power off to the equipment at the source. Then use a Type C fire extinguisher, which uses noncorrosive fire retardants, to extinguish the fire.

Fire Suppression Equipment

Type C fire extinguishers, which use noncorrosive fire retardants such as carbon dioxide and Halotron™, are most effective for suppressing electrical fires. Type C fire extinguishers displace oxygen from the point of combustion to eliminate the fire. For extinguishing fire on or around equipment that draws air from the environment for cooling, you should use this type of inert oxygen displacement extinguisher instead of an extinguisher that leaves residues on equipment.

Do not use multipurpose Type ABC chemical fire extinguishers (dry chemical fire extinguishers). The primary ingredient in these fire extinguishers is monoammonium phosphate, which is very sticky and

difficult to clean. In addition, in the presence of minute amounts of moisture, monoammonium phosphate can become highly corrosive and corrodes most metals.

Any equipment in a room in which a chemical fire extinguisher has been discharged is subject to premature failure and unreliable operation. The equipment is considered to be irreparably damaged.

> **NOTE**: To keep warranties effective, do not use a dry chemical fire extinguisher to control a fire at or near a Juniper Networks device. If a dry chemical fire extinguisher is used, the unit is no longer eligible for coverage under a service agreement.

We recommend that you dispose of any irreparably damaged equipment in an environmentally responsible manner.

Installation Instructions Warning

> **WARNING**: Read the installation instructions before you connect the device to a power source.
>
> **Waarschuwing** Raadpleeg de installatie-aanwijzingen voordat u het systeem met de voeding verbindt.
>
> **Varoitus** Lue asennusohjeet ennen järjestelmän yhdistämistä virtalähteeseen.
>
> **Avertissement** Avant de brancher le système sur la source d'alimentation, consulter les directives d'installation.
>
> **Warnung** Lesen Sie die Installationsanweisungen, bevor Sie das System an die Stromquelle anschließen.
>
> **Avvertenza** Consultare le istruzioni di installazione prima di collegare il sistema all'alimentatore.
>
> **Advarsel** Les installasjonsinstruksjonene før systemet kobles til strømkilden.
>
> **Aviso** Leia as instruções de instalação antes de ligar o sistema à sua fonte de energia.
>
> **¡Atención!** Ver las instrucciones de instalación antes de conectar el sistema a la red de alimentación.
>
> **Varning!** Läs installationsanvisningarna innan du kopplar systemet till dess strömförsörjningsenhet.

Chassis and Component Lifting Guidelines

- Before moving the device to a site, ensure that the site meets the power, environmental, and clearance requirements.
- Before lifting or moving the device, disconnect all external cables and wires.
- As when lifting any heavy object, ensure that most of the weight is borne by your legs rather than your back. Keep your knees bent and your back relatively straight. Do not twist your body as you lift. Balance the load evenly and be sure that your footing is firm.
- Use the following lifting guidelines to lift devices and components:
  - Up to 39.7 lb (18 kg): One person.
  - 39.7 lb (18 kg) to 70.5 lb (32 kg): Two or more people.
  - 70.5 lb (32 kg) to 121.2 lb (55 kg): Three or more people.
  - Above 121.2 lb (55 kg): Material handling systems (such as levers, slings, lifts and so on) must be used. When this is not practical, specially trained persons or systems must be used (riggers or movers).

Restricted Access Warning

WARNING: This unit is intended for installation in restricted access areas. A restricted access area is an area to which access can be gained only by service personnel through the use of a special tool, lock and key, or other means of security, and which is controlled by the authority responsible for the location.

Waarschuwing Dit toestel is bedoeld voor installatie op plaatsen met beperkte toegang. Een plaats met beperkte toegang is een plaats waar toegang slechts door servicepersoneel verkregen kan worden door middel van een speciaal instrument, een slot en sleutel, of een ander veiligheidsmiddel, en welke beheerd wordt door de overheidsinstantie die verantwoordelijk is voor de locatie.

Varoitus Tämä laite on tarkoitettu asennettavaksi paikkaan, johon pääsy on rajoitettua. Paikka, johon pääsy on rajoitettua, tarkoittaa paikkaa, johon vain huoltohenkilöstö

pääsee jonkin erikoistyökalun, lukkoon sopivan avaimen tai jonkin muun turvalaitteen avulla ja joka on paikasta vastuussa olevien toimivaltaisten henkilöiden valvoma.

Avertissement Cet appareil est à installer dans des zones d'accès réservé. Ces dernières sont des zones auxquelles seul le personnel de service peut accéder en utilisant un outil spécial, un mécanisme de verrouillage et une clé, ou tout autre moyen de sécurité. L'accès aux zones de sécurité est sous le contrôle de l'autorité responsable de l'emplacement.

Warnung Diese Einheit ist zur Installation in Bereichen mit beschränktem Zutritt vorgesehen. Ein Bereich mit beschränktem Zutritt ist ein Bereich, zu dem nur Wartungspersonal mit einem Spezialwerkzeugs, Schloß und Schlüssel oder anderer Sicherheitsvorkehrungen Zugang hat, und der von dem für die Anlage zuständigen Gremium kontrolliert wird.

Avvertenza Questa unità deve essere installata in un'area ad accesso limitato. Un'area ad accesso limitato è un'area accessibile solo a personale di assistenza tramite un'attrezzo speciale, lucchetto, o altri dispositivi di sicurezza, ed è controllata dall'autorità responsabile della zona.

Advarsel Denne enheten er laget for installasjon i områder med begrenset adgang. Et område med begrenset adgang gir kun adgang til servicepersonale som bruker et spesielt verktøy, lås og nøkkel, eller en annen sikkerhetsanordning, og det kontrolleres av den autoriteten som er ansvarlig for området.

Aviso Esta unidade foi concebida para instalação em áreas de acesso restrito. Uma área de acesso restrito é uma área à qual apenas tem acesso o pessoal de serviço autorizado, que possua uma ferramenta, chave e fechadura especial, ou qualquer outra forma de segurança. Esta área é controlada pela autoridade responsável pelo local.

¡Atención! Esta unidad ha sido diseñada para instalarse en áreas de acceso restringido. Área de acceso restringido significa un área a la que solamente tiene acceso el personal de servicio mediante la utilización de una herramienta especial, cerradura con llave, o algún otro medio de seguridad, y que está bajo el control de la autoridad responsable del local.

Varning! Denna enhet är avsedd för installation i områden med begränsat tillträde. Ett område med begränsat tillträde får endast tillträdas av servicepersonal med ett speciellt verktyg, lås och nyckel, eller annan säkerhetsanordning, och kontrolleras av den auktoritet som ansvarar för området.

Ramp Warning

WARNING: When installing the device, do not use a ramp inclined at more than 10 degrees.

Waarschuwing Gebruik een oprijplaat niet onder een hoek van meer dan 10 graden.

Varoitus Älä käytä sellaista kaltevaa pintaa, jonka kaltevuus ylittää 10 astetta.

Avertissement Ne pas utiliser une rampe dont l'inclinaison est supérieure à 10 degrés.

Warnung Keine Rampen mit einer Neigung von mehr als 10 Grad verwenden.

Avvertenza Non usare una rampa con pendenza superiore a 10 gradi.

Advarsel Bruk aldri en rampe som heller mer enn 10 grader.

Aviso Não utilize uma rampa com uma inclinação superior a 10 graus.

¡Atención! No usar una rampa inclinada más de 10 grados.

Varning! Använd inte ramp med en lutning på mer än 10 grader.

Rack-Mounting and Cabinet-Mounting Warnings

Ensure that the rack or cabinet in which the device is installed is evenly and securely supported. Uneven mechanical loading could lead to a hazardous condition.

WARNING: To prevent bodily injury when mounting or servicing the device in a rack, take the following precautions to ensure that the system remains stable. The following directives help maintain your safety:

- The device must be installed in a rack that is secured to the building structure.
- The device should be mounted at the bottom of the rack if it is the only unit in the rack.
- When mounting the device on a partially filled rack, load the rack from the bottom to the top with the heaviest component at the bottom of the rack.

- If the rack is provided with stabilizing equipment, install the stabilizers before mounting or servicing the device in the rack.

Waarschuwing Om lichamelijk letsel te voorkomen wanneer u dit toestel in een rek monteert of het daar een servicebeurt geeft, moet u speciale voorzorgsmaatregelen nemen om ervoor te zorgen dat het toestel stabiel blijft. De onderstaande richtlijnen worden verstrekt om uw veiligheid te verzekeren:

- De Juniper Networks switch moet in een stellage worden geïnstalleerd die aan een bouwsel is verankerd.
- Dit toestel dient onderaan in het rek gemonteerd te worden als het toestel het enige in het rek is.
- Wanneer u dit toestel in een gedeeltelijk gevuld rek monteert, dient u het rek van onderen naar boven te laden met het zwaarste onderdeel onderaan in het rek.
- Als het rek voorzien is van stabiliseringshulpmiddelen, dient u de stabilisatoren te monteren voordat u het toestel in het rek monteert of het daar een servicebeurt geeft.

Varoitus Kun laite asetetaan telineeseen tai huolletaan sen ollessa telineessä, on noudatettava erityisiä varotoimia järjestelmän vakavuuden säilyttämiseksi, jotta vältytään loukkaantumiselta. Noudata seuraavia turvallisuusohjeita:

- Juniper Networks switch on asennettava telineeseen, joka on kiinnitetty rakennukseen.
- Jos telineessä ei ole muita laitteita, aseta laite telineen alaosaan.
- Jos laite asetetaan osaksi täytettyyn telineeseen, aloita kuormittaminen sen alaosasta kaikkein raskaimmalla esineellä ja siirry sitten sen yläosaan.
- Jos telinettä varten on vakaimet, asenna ne ennen laitteen asettamista telineeseen tai sen huoltamista siinä.

Avertissement Pour éviter toute blessure corporelle pendant les opérations de montage ou de réparation de cette unité en casier, il convient de prendre des précautions spéciales afin de maintenir la stabilité du système. Les directives ci-dessous sont destinées à assurer la protection du personnel:

- Le rack sur lequel est monté le Juniper Networks switch doit être fixé à la structure du bâtiment.

- Si cette unité constitue la seule unité montée en casier, elle doit être placée dans le bas.
- Si cette unité est montée dans un casier partiellement rempli, charger le casier de bas en haut en plaçant l'élément le plus lourd dans le bas.
- Si le casier est équipé de dispositifs stabilisateurs, installer les stabilisateurs avant de monter ou de réparer l'unité en casier.

Warnung Zur Vermeidung von Körperverletzung beim Anbringen oder Warten dieser Einheit in einem Gestell müssen Sie besondere Vorkehrungen treffen, um sicherzustellen, daß das System stabil bleibt. Die folgenden Richtlinien sollen zur Gewährleistung Ihrer Sicherheit dienen:

- Der Juniper Networks switch muß in einem Gestell installiert werden, das in der Gebäudestruktur verankert ist.
- Wenn diese Einheit die einzige im Gestell ist, sollte sie unten im Gestell angebracht werden.
- Bei Anbringung dieser Einheit in einem zum Teil gefüllten Gestell ist das Gestell von unten nach oben zu laden, wobei das schwerste Bauteil unten im Gestell anzubringen ist.
- Wird das Gestell mit Stabilisierungszubehör geliefert, sind zuerst die Stabilisatoren zu installieren, bevor Sie die Einheit im Gestell anbringen oder sie warten.

Avvertenza Per evitare infortuni fisici durante il montaggio o la manutenzione di questa unità in un supporto, occorre osservare speciali precauzioni per garantire che il sistema rimanga stabile. Le seguenti direttive vengono fornite per garantire la sicurezza personale:

- Il Juniper Networks switch deve essere installato in un telaio, il quale deve essere fissato alla struttura dell'edificio.
- Questa unità deve venire montata sul fondo del supporto, se si tratta dell'unica unità da montare nel supporto.
- Quando questa unità viene montata in un supporto parzialmente pieno, caricare il supporto dal basso all'alto, con il componente più pesante sistemato sul fondo del supporto.
- Se il supporto è dotato di dispositivi stabilizzanti, installare tali dispositivi prima di montare o di procedere alla manutenzione dell'unità nel supporto.

Advarsel Unngå fysiske skader under montering eller reparasjonsarbeid på denne enheten når den befinner seg i et kabinett. Vær nøye med at systemet er stabilt. Følgende retningslinjer er gitt for å verne om sikkerheten:

- Juniper Networks switch må installeres i et stativ som er forankret til bygningsstrukturen.
- Denne enheten bør monteres nederst i kabinettet hvis dette er den eneste enheten i kabinettet.
- Ved montering av denne enheten i et kabinett som er delvis fylt, skal kabinettet lastes fra bunnen og opp med den tyngste komponenten nederst i kabinettet.
- Hvis kabinettet er utstyrt med stabiliseringsutstyr, skal stabilisatorene installeres før montering eller utføring av reparasjonsarbeid på enheten i kabinettet.

Aviso Para se prevenir contra danos corporais ao montar ou reparar esta unidade numa estante, deverá tomar precauções especiais para se certificar de que o sistema possui um suporte estável. As seguintes directrizes ajudá-lo-ão a efectuar o seu trabalho com segurança:

- O Juniper Networks switch deverá ser instalado numa prateleira fixa à estrutura do edificio.
- Esta unidade deverá ser montada na parte inferior da estante, caso seja esta a única unidade a ser montada.
- Ao montar esta unidade numa estante parcialmente ocupada, coloque os itens mais pesados na parte inferior da estante, arrumando-os de baixo para cima.
- Se a estante possuir um dispositivo de estabilização, instale-o antes de montar ou reparar a unidade.

¡Atención! Para evitar lesiones durante el montaje de este equipo sobre un bastidor, oeriormente durante su mantenimiento, se debe poner mucho cuidado en que el sistema quede bien estable. Para garantizar su seguridad, proceda según las siguientes instrucciones:

- El Juniper Networks switch debe instalarse en un bastidor fijado a la estructura del edificio.
- Colocar el equipo en la parte inferior del bastidor, cuando sea la única unidad en el mismo.

- Cuando este equipo se vaya a instalar en un bastidor parcialmente ocupado, comenzar la instalación desde la parte inferior hacia la superior colocando el equipo más pesado en la parte inferior.
- Si el bastidor dispone de dispositivos estabilizadores, instalar éstos antes de montar o proceder al mantenimiento del equipo instalado en el bastidor.

Varning! För att undvika kroppsskada när du installerar eller utför underhållsarbete på denna enhet på en ställning måste du vidta särskilda försiktighetsåtgärder för att försäkra dig om att systemet står stadigt. Följande riktlinjer ges för att trygga din säkerhet:

- Juniper Networks switch måste installeras i en ställning som är förankrad i byggnadens struktur.
- Om denna enhet är den enda enheten på ställningen skall den installeras längst ned på ställningen.
- Om denna enhet installeras på en delvis fylld ställning skall ställningen fyllas nedifrån och upp, med de tyngsta enheterna längst ned på ställningen.
- Om ställningen är försedd med stabiliseringsdon skall dessa monteras fast innan enheten installeras eller underhålls på ställningen.

Grounded Equipment Warning

WARNING: This device must be properly grounded at all times. Follow the instructions in this guide to properly ground the device to earth.

Waarschuwing Dit apparaat moet altijd goed geaard zijn. Volg de instructies in deze gids om het apparaat goed te aarden.

Varoitus Laitteen on oltava pysyvästi maadoitettu. Maadoita laite asianmukaisesti noudattamalla tämän oppaan ohjeita.

Avertissement L'appareil doit être correctement mis à la terre à tout moment. Suivez les instructions de ce guide pour correctement mettre l'appareil à la terre.

Warnung Das Gerät muss immer ordnungsgemäß geerdet sein. Befolgen Sie die Anweisungen in dieser Anleitung, um das Gerät ordnungsgemäß zu erden.

Avvertenza Questo dispositivo deve sempre disporre di una connessione a massa. Seguire le istruzioni indicate in questa guida per connettere correttamente il dispositivo a massa.

Advarsel Denne enheten på jordes skikkelig hele tiden. Følg instruksjonene i denne veiledningen for å jorde enheten.

Aviso Este equipamento deverá estar ligado à terra. Siga las instrucciones en esta guía para conectar correctamente este dispositivo a tierra.

¡Atención! Este dispositivo debe estar correctamente conectado a tierra en todo momento. Siga las instrucciones en esta guía para conectar correctamente este dispositivo a tierra.

Varning! Den här enheten måste vara ordentligt jordad. Följ instruktionerna i den här guiden för att jorda enheten ordentligt.

Radiation from Open Port Apertures Warning

LASER WARNING: Because invisible radiation might be emitted from the aperture of the port when no fiber cable is connected, avoid exposure to radiation and do not stare into open apertures.

Waarschuwing Aangezien onzichtbare straling vanuit de opening van de poort kan komen als er geen fiberkabel aangesloten is, dient blootstelling aan straling en het kijken in open openingen vermeden te worden.

Varoitus Koska portin aukosta voi emittoitua näkymätöntä säteilyä, kun kuitukaapelia ei ole kytkettynä, vältä säteilylle altistumista äläkä katso avoimiin aukkoihin.

Avertissement Des radiations invisibles à l'il nu pouvant traverser l'ouverture du port lorsqu'aucun câble en fibre optique n'y est connecté, il est recommandé de ne pas regarder fixement l'intérieur de ces ouvertures.

Warnung Aus der Port-Öffnung können unsichtbare Strahlen emittieren, wenn kein Glasfaserkabel angeschlossen ist. Vermeiden Sie es, sich den Strahlungen auszusetzen, und starren Sie nicht in die Öffnungen!

Avvertenza Quando i cavi in fibra non sono inseriti, radiazioni invisibili possono essere emesse attraverso l'apertura della porta. Evitate di esporvi alle radiazioni e non guardate direttamente nelle aperture.

Advarsel Unngå utsettelse for stråling, og stirr ikke inn i åpninger som er åpne, fordi usynlig stråling kan emiteres fra portens åpning når det ikke er tilkoblet en fiberkabel.

Aviso Dada a possibilidade de emissão de radiação invisível através do orifício da via de acesso, quando esta não tiver nenhum cabo de fibra conectado, deverá evitar an EXposição à radiação e não deverá olhar fixamente para orifícios que se encontrarem a descoberto.

¡Atención! Debido a que la apertura del puerto puede emitir radiación invisible cuando no existe un cable de fibra conectado, evite mirar directamente a las aperturas para no exponerse a la radiación.

Varning! Osynlig strålning kan avges från en portöppning utan ansluten fiberkabel och du bör därför undvika att bli utsatt för strålning genom att inte stirra in i oskyddade öppningar.

Laser and LED Safety Guidelines and Warnings

IN THIS SECTION

- General Laser Safety Guidelines | 136
- Class 1 Laser Product Warning | 136
- Class 1 LED Product Warning | 137
- Laser Beam Warning | 137

Juniper Networks devices are equipped with laser transmitters, which are considered a Class 1 Laser Product by the U.S. Food and Drug Administration and are evaluated as a Class 1 Laser Product per EN 60825-1 requirements.

Observe the following guidelines and warnings:

General Laser Safety Guidelines

When working around ports that support optical transceivers, observe the following safety guidelines to prevent eye injury:

- Do not look into unterminated ports or at fibers that connect to unknown sources.
- Do not examine unterminated optical ports with optical instruments.
- Avoid direct exposure to the beam.

LASER WARNING: Unterminated optical connectors can emit invisible laser radiation. The lens in the human eye focuses all the laser power on the retina, so focusing the eye directly on a laser source—even a low-power laser—could permanently damage the eye.

Avertissement Les connecteurs à fibre optique sans terminaison peuvent émettre un rayonnement laser invisible. Le cristallin de l'œil humain faisant converger toute la puissance du laser sur la rétine, toute focalisation directe de l'œil sur une source laser, —même de faible puissance—, peut entraîner des lésions oculaires irréversibles.

Class 1 Laser Product Warning

LASER WARNING: Class 1 laser product.

Waarschuwing Klasse-1 laser produkt.

Varoitus Luokan 1 lasertuote.

Avertissement Produit laser de classe I.

Warnung Laserprodukt der Klasse 1.

Avvertenza Prodotto laser di Classe 1.

Advarsel Laserprodukt av klasse 1.

Aviso Produto laser de classe 1.

¡Atención! Producto láser Clase I.

Varning! Laserprodukt av klass 1.

Class 1 LED Product Warning

LASER WARNING: Class 1 LED product.
Waarschuwing Klasse 1 LED-product.

Varoitus Luokan 1 valodiodituote.

Avertissement Alarme de produit LED Class I.

Warnung Class 1 LED-Produktwarnung.

Avvertenza Avvertenza prodotto LED di Classe 1.

Advarsel LED-produkt i klasse 1.

Aviso Produto de classe 1 com LED.

¡Atención! Aviso sobre producto LED de Clase 1.

Varning! Lysdiodprodukt av klass 1.

Laser Beam Warning

LASER WARNING: Do not stare into the laser beam or view it directly with optical instruments.
Waarschuwing Niet in de straal staren of hem rechtstreeks bekijken met optische instrumenten.

Varoitus Älä katso säteeseen äläkä tarkastele sitä suoraan optisen laitteen avulla.

Avertissement Ne pas fixer le faisceau des yeux, ni l'observer directement à l'aide d'instruments optiques.

Warnung Nicht direkt in den Strahl blicken und ihn nicht direkt mit optischen Geräten prüfen.

Avvertenza Non fissare il raggio con gli occhi né usare strumenti ottici per osservarlo direttamente.

Advarsel Stirr eller se ikke direkte p strlen med optiske instrumenter.

Aviso Não olhe fixamente para o raio, nem olhe para ele directamente com instrumentos ópticos.

¡Atención! No mirar fijamente el haz ni observarlo directamente con instrumentos ópticos.

Varning! Rikta inte blicken in mot strålen och titta inte direkt på den genom optiska instrument.

Maintenance and Operational Safety Guidelines and Warnings

IN THIS SECTION

- Battery Handling Warning | 138
- Jewelry Removal Warning | 139
- Lightning Activity Warning | 141
- Operating Temperature Warning | 142
- Product Disposal Warning | 143

While performing the maintenance activities for devices, observe the following guidelines and warnings:

Battery Handling Warning

WARNING: Replacing a battery incorrectly might result in an explosion. Replace a battery only with the same or equivalent type recommended by the manufacturer. Dispose of used batteries according to the manufacturer's instructions.

Waarschuwing Er is ontploffingsgevaar als de batterij verkeerd vervangen wordt. Vervang de batterij slechts met hetzelfde of een equivalent type dat door de fabrikant

aanbevolen is. Gebruikte batterijen dienen overeenkomstig fabrieksvoorschriften weggeworpen te worden.

Varoitus Räjähdyksen vaara, jos akku on vaihdettu väärään akkuun. Käytä vaihtamiseen ainoastaan saman- tai vastaavantyyppistä akkua, joka on valmistajan suosittelema. Hävitä käytetyt akut valmistajan ohjeiden mukaan.

Avertissement Danger d'explosion si la pile n'est pas remplacée correctement. Ne la remplacer que par une pile de type semblable ou équivalent, recommandée par le fabricant. Jeter les piles usagées conformément aux instructions du fabricant.

Warnung Bei Einsetzen einer falschen Batterie besteht Explosionsgefahr. Ersetzen Sie die Batterie nur durch den gleichen oder vom Hersteller empfohlenen Batterietyp. Entsorgen Sie die benutzten Batterien nach den Anweisungen des Herstellers.

Advarsel Det kan være fare for eksplosjon hvis batteriet skiftes på feil måte. Skift kun med samme eller tilsvarende type som er anbefalt av produsenten. Kasser brukte batterier i henhold til produsentens instruksjoner.

Avvertenza Pericolo di esplosione se la batteria non è installata correttamente. Sostituire solo con una di tipo uguale o equivalente, consigliata dal produttore. Eliminare le batterie usate secondo le istruzioni del produttore.

Aviso Existe perigo de explosão se a bateria for substituída incorrectamente. Substitua a bateria por uma bateria igual ou de um tipo equivalente recomendado pelo fabricante. Destrua as baterias usadas conforme as instruções do fabricante.

¡Atención! Existe peligro de explosión si la batería se reemplaza de manera incorrecta. Reemplazar la baterían EXclusivamente con el mismo tipo o el equivalente recomendado por el fabricante. Desechar las baterías gastadas según las instrucciones del fabricante.

Varning! Explosionsfara vid felaktigt batteribyte. Ersätt endast batteriet med samma batterityp som rekommenderas av tillverkaren eller motsvarande. Följ tillverkarens anvisningar vid kassering av använda batterier.

Jewelry Removal Warning

WARNING: Before working on equipment that is connected to power lines, remove jewelry, including rings, necklaces, and watches. Metal objects heat up when connected to power and ground and can cause serious burns or can be welded to the terminals.

Waarschuwing Alvorens aan apparatuur te werken die met elektrische leidingen is verbonden, sieraden (inclusief ringen, kettingen en horloges) verwijderen. Metalen voorwerpen worden warm wanneer ze met stroom en aarde zijn verbonden, en kunnen ernstige brandwonden veroorzaken of het metalen voorwerp aan de aansluitklemmen lassen.

Varoitus Ennen kuin työskentelet voimavirtajohtoihin kytkettyjen laitteiden parissa, ota pois kaikki korut (sormukset, kaulakorut ja kellot mukaan lukien). Metalliesineet kuumenevat, kun ne ovat yhteydessä sähkövirran ja maan kanssa, ja ne voivat aiheuttaa vakavia palovammoja tai hitsata metalliesineet kiinni liitäntänapoihin.

Avertissement Avant d'accéder à cet équipement connecté aux lignes électriques, ôter tout bijou (anneaux, colliers et montres compris). Lorsqu'ils sont branchés à l'alimentation et reliés à la terre, les objets métalliques chauffent, ce qui peut provoquer des blessures graves ou souder l'objet métallique aux bornes.

Warnung Vor der Arbeit an Geräten, die an das Netz angeschlossen sind, jeglichen Schmuck (einschließlich Ringe, Ketten und Uhren) abnehmen. Metallgegenstände erhitzen sich, wenn sie an das Netz und die Erde angeschlossen werden, und können schwere Verbrennungen verursachen oder an die Anschlußklemmen angeschweißt werden.

Avvertenza Prima di intervenire su apparecchiature collegate alle linee di alimentazione, togliersi qualsiasi monile (inclusi anelli, collane, braccialetti ed orologi). Gli oggetti metallici si riscaldano quando sono collegati tra punti di alimentazione e massa: possono causare ustioni gravi oppure il metallo può saldarsi ai terminali.

Advarsel Fjern alle smykker (inkludert ringer, halskjeder og klokker) før du skal arbeide på utstyr som er koblet til kraftledninger. Metallgjenstander som er koblet til kraftledninger og jord blir svært varme og kan forårsake alvorlige brannskader eller smelte fast til polene.

Aviso Antes de trabalhar em equipamento que esteja ligado a linhas de corrente, retire todas as jóias que estiver a usar (incluindo anéis, fios e relógios). Os objectos metálicos aquecerão em contacto com a corrente e em contacto com a ligação à terra, podendo causar queimaduras graves ou ficarem soldados aos terminais.

¡Atención! Antes de operar sobre equipos conectados a líneas de alimentación, quitarse las joyas (incluidos anillos, collares y relojes). Los objetos de metal se calientan cuando se conectan a la alimentación y a tierra, lo que puede ocasionar quemaduras graves o que los objetos metálicos queden soldados a los bornes.

Varning! Tag av alla smycken (inklusive ringar, halsband och armbandsur) innan du arbetar på utrustning som är kopplad till kraftledningar. Metallobjekt hettas upp när de kopplas ihop med ström och jord och kan förorsaka allvarliga brännskador; metallobjekt kan också sammansvetsas med kontakterna.

Lightning Activity Warning

WARNING: Do not work on the system or connect or disconnect cables during periods of lightning activity.

Waarschuwing Tijdens onweer dat gepaard gaat met bliksem, dient u niet aan het systeem te werken of kabels aan te sluiten of te ontkoppelen.

Varoitus Älä työskentele järjestelmän parissa äläkä yhdistä tai irrota kaapeleita ukkosilmalla.

Avertissement Ne pas travailler sur le système ni brancher ou débrancher les câbles pendant un orage.

Warnung Arbeiten Sie nicht am System und schließen Sie keine Kabel an bzw. trennen Sie keine ab, wenn es gewittert.

Avvertenza Non lavorare sul sistema o collegare oppure scollegare i cavi durante un temporale con fulmini.

Advarsel Utfør aldri arbeid på systemet, eller koble kabler til eller fra systemet når det tordner eller lyner.

Aviso Não trabalhe no sistema ou ligue e desligue cabos durante períodos de mau tempo (trovoada).

¡Atención! No operar el sistema ni conectar o desconectar cables durante el transcurso de descargas eléctricas en la atmósfera.

Varning! Vid åska skall du aldrig utföra arbete på systemet eller ansluta eller koppla loss kablar.

Operating Temperature Warning

WARNING: To prevent the device from overheating, do not operate it in an area that exceeds the maximum recommended ambient temperature. To prevent airflow restriction, allow at least 6 in. (15.2 cm) of clearance around the ventilation openings.

Waarschuwing Om te voorkomen dat welke switch van de Juniper Networks router dan ook oververhit raakt, dient u deze niet te bedienen op een plaats waar de maximale aanbevolen omgevingstemperatuur van 40° C wordt overschreden. Om te voorkomen dat de luchtstroom wordt beperkt, dient er minstens 15,2 cm speling rond de ventilatie-openingen te zijn.

Varoitus Ettei Juniper Networks switch-sarjan reititin ylikuumentuisi, sitä ei saa käyttää tilassa, jonka lämpötila ylittää korkeimman suositellun ympäristölämpötilan 40° C. Ettei ilmanvaihto estyisi, tuuletusaukkojen ympärille on jätettävä ainakin 15,2 cm tilaa.

Avertissement Pour éviter toute surchauffe des routeurs de la gamme Juniper Networks switch, ne l'utilisez pas dans une zone où la température ambiante est supérieure à 40° C. Pour permettre un flot d'air constant, dégagez un espace d'au moins 15,2 cm autour des ouvertures de ventilations.

Warnung Um einen Router der switch vor Überhitzung zu schützen, darf dieser nicht in einer Gegend betrieben werden, in der die Umgebungstemperatur das empfohlene Maximum von 40° C überschreitet. Um Lüftungsverschluß zu verhindern, achten Sie darauf, daß mindestens 15,2 cm lichter Raum um die Lüftungsöffnungen herum frei bleibt.

Avvertenza Per evitare il surriscaldamento dei switch, non adoperateli in un locale che ecceda la temperatura ambientale massima di 40° C. Per evitare che la circolazione dell'aria sia impedita, lasciate uno spazio di almeno 15.2 cm di fronte alle aperture delle ventole.

Advarsel Unngå overoppheting av eventuelle rutere i Juniper Networks switch Disse skal ikke brukes på steder der den anbefalte maksimale omgivelsestemperaturen overstiger 40° C (104° F). Sørg for at klaringen rundt lufteåpningene er minst 15,2 cm (6 tommer) for å forhindre nedsatt luftsirkulasjon.

Aviso Para evitar o sobreaquecimento do encaminhador Juniper Networks switch, não utilize este equipamento numa área que exceda a temperatura máxima recomendada de 40° C. Para evitar a restrição à circulação de ar, deixe pelo menos um espaço de 15,2 cm à volta das aberturas de ventilação.

¡Atención! Para impedir que un encaminador de la serie Juniper Networks switch se recaliente, no lo haga funcionar en un área en la que se supere la temperatura ambiente máxima recomendada de 40° C. Para impedir la restricción de la entrada de aire, deje un espacio mínimo de 15,2 cm alrededor de las aperturas para ventilación.

Varning! Förhindra att en Juniper Networks switch överhettas genom att inte använda den i ett område där den maximalt rekommenderade omgivningstemperaturen på 40° C överskrids. Förhindra att luftcirkulationen inskränks genom att se till att det finns fritt utrymme på minst 15,2 cm omkring ventilationsöppningarna.

Product Disposal Warning

WARNING: Disposal of this device must be handled according to all national laws and regulations.

Waarschuwing Dit produkt dient volgens alle landelijke wetten en voorschriften te worden afgedankt.

Varoitus Tämän tuotteen lopullisesta hävittämisestä tulee huolehtia kaikkia valtakunnallisia lakeja ja säännöksiä noudattaen.

Avertissement La mise au rebut définitive de ce produit doit être effectuée conformément à toutes les lois et réglementations en vigueur.

Warnung Dieses Produkt muß den geltenden Gesetzen und Vorschriften entsprechend entsorgt werden.

Avvertenza L'eliminazione finale di questo prodotto deve essere eseguita osservando le normative italiane vigenti in materia

Advarsel Endelig disponering av dette produktet må skje i henhold til nasjonale lover og forskrifter.

Aviso A descartagem final deste produto deverá ser efectuada de acordo com os regulamentos e a legislação nacional.

¡Atención! El desecho final de este producto debe realizarse según todas las leyes y regulaciones nacionales

Varning! Slutlig kassering av denna produkt bör skötas i enlighet med landets alla lagar och föreskrifter.

Action to Take After an Electrical Accident

If an electrical accident results in an injury, take the following actions in this order:

1. Use caution. Be aware of potentially hazardous conditions that could cause further injury.
2. Disconnect power from the device.
3. If possible, send another person to get medical aid. Otherwise, assess the condition of the victim, then call for help.

Prevention of Electrostatic Discharge Damage

Device components that are shipped in antistatic bags are sensitive to damage from static electricity. Some components can be impaired by voltages as low as 30 V. You can easily generate potentially damaging static voltages whenever you handle plastic or foam packing material or if you move components across plastic or carpets. Observe the following guidelines to minimize the potential for electrostatic discharge (ESD) damage, which can cause intermittent or complete component failures:

- Always use an ESD wrist strap when you are handling components that are subject to ESD damage, and make sure that it is in direct contact with your skin.

  If a grounding strap is not available, hold the component in its antistatic bag (see Figure 44 on page 145) in one hand and touch the exposed, bare metal of the device with the other hand immediately before inserting the component into the device.

  WARNING: For safety, periodically check the resistance value of the ESD grounding strap. The measurement must be in the range 1 through 10 Mohms.

  Avertissement Par mesure de sécurité, vérifiez régulièrement la résistance du bracelet antistatique. Cette valeur doit être comprise entre 1 et 10 mégohms (Mohms).

- When handling any component that is subject to ESD damage and that is removed from the device, make sure the equipment end of your ESD wrist strap is attached to the ESD point on the chassis.

  If no grounding strap is available, touch the exposed, bare metal of the device to ground yourself before handling the component.

- Avoid contact between the component that is subject to ESD damage and your clothing. ESD voltages emitted from clothing can damage components.

- When removing or installing a component that is subject to ESD damage, always place it component-side up on an antistatic surface, in an antistatic card rack, or in an antistatic bag (see Figure 44 on page 145). If you are returning a component, place it in an antistatic bag before packing it.

Figure 44: Placing a Component into an Antistatic Bag

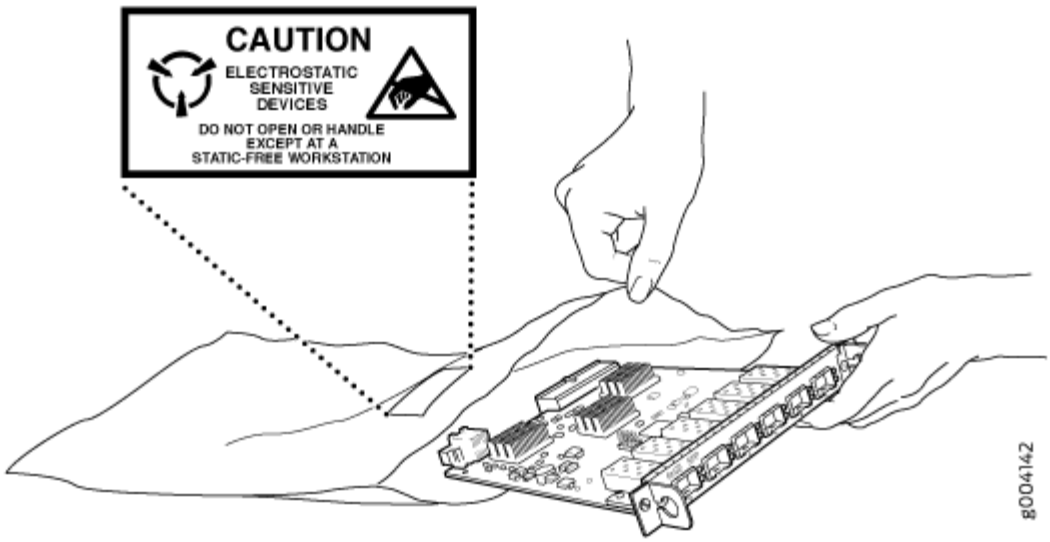

CAUTION: ANSI/TIA/EIA-568 cables such as Category 5e and Category 6 can get electrostatically charged. To dissipate this charge, always ground the cables to a suitable and safe earth ground before connecting them to the system.

Attention Les câbles ANSI/TIA/EIA-568, par exemple Cat 5e et Cat 6, peuvent emmagasiner des charges électrostatiques. Pour évacuer ces charges, reliez toujours les câbles à une prise de terre adaptée avant de les raccorder au système.

AC Power Electrical Safety Guidelines

The following electrical safety guidelines apply to AC-powered devices:

- Note the following warnings printed on the device:

  "**CAUTION:** THIS UNIT HAS MORE THAN ONE POWER SUPPLY CORD. DISCONNECT ALL POWER SUPPLY CORDS BEFORE SERVICING TO AVOID ELECTRIC SHOCK."

"**ATTENTION:** CET APPAREIL COMPORTE PLUS D'UN CORDON D'ALIMENTATION. AFIN DE PRÉVENIR LES CHOCS ÉLECTRIQUES, DÉBRANCHER TOUT CORDON D'ALIMENTATION AVANT DE FAIRE LE DÉPANNAGE."

- AC-powered devices are shipped with a three-wire electrical cord with a grounding-type plug that fits only a grounding-type power outlet. Do not circumvent this safety feature. Equipment grounding must comply with local and national electrical codes.
- You must provide an external certified circuit breaker (2-pole circuit breaker or 4-pole circuit breaker based on your device) rated minimum 20 A in the building installation.
- The power cord serves as the main disconnecting device for the AC-powered device. The socket outlet must be near the AC-powered device and be easily accessible.
- For devices that have more than one power supply connection, you must ensure that all power connections are fully disconnected so that power to the device is completely removed to prevent electric shock. To disconnect power, unplug all power cords (one for each power supply).

Power Cable Warning (Japanese)

WARNING: The attached power cable is only for this product. Do not use the cable for another product.

注意

附属の電源コードセットはこの製品専用です。
他の電気機器には使用しないでください。

g017263

AC Power Disconnection Warning

WARNING: Before working on the device or near power supplies, unplug all the power cords from an AC-powered device.

Waarschuwing Voordat u aan een frame of in de nabijheid van voedingen werkt, dient u bij wisselstroom toestellen de stekker van het netsnoer uit het stopcontact te halen.

Varoitus Kytke irti vaihtovirtalaitteiden virtajohto, ennen kuin teet mitään asennuspohjalle tai työskentelet virtalähteiden läheisyydessä.

Avertissement Avant de travailler sur un châssis ou à proximité d'une alimentation électrique, débrancher le cordon d'alimentation des unités en courant alternatif.

Warnung Bevor Sie an einem Chassis oder in der Nähe von Netzgeräten arbeiten, ziehen Sie bei Wechselstromeinheiten das Netzkabel ab bzw.

Avvertenza Prima di lavorare su un telaio o intorno ad alimentatori, scollegare il cavo di alimentazione sulle unità CA.

Advarsel Før det utføres arbeid på kabinettet eller det arbeides i nærheten av strømforsyningsenheter, skal strømledningen trekkes ut på vekselstrømsenheter.

Aviso Antes de trabalhar num chassis, ou antes de trabalhar perto de unidades de fornecimento de energia, desligue o cabo de alimentação nas unidades de corrente alternada.

¡Atención! Antes de manipular el chasis de un equipo o trabajar cerca de una fuente de alimentación, desenchufar el cable de alimentación en los equipos de corriente alterna (CA).

Varning! Innan du arbetar med ett chassi eller nära strömförsörjningsenheter skall du för växelströmsenheter dra ur nätsladden.

PTX1000 DC Power Electrical Safety Guidelines

The following electrical safety guidelines apply to a DC-powered PTX1000:

- A DC-powered PTX1000 is equipped with a DC terminal block that is rated for the power requirements of a maximally configured PTX1000. To supply sufficient power, terminate the DC input wiring on a facility DC source capable of supplying at least 40 A @ –48 VDC per input for the DC power supply. Incorporate an easily accessible disconnect device into the facility wiring. In the United States and Canada, the –48 VDC facility should be equipped with a circuit breaker rated a minimum of 125% of the power provisioned for the input in accordance with the National Electrical Code in the US and the Canadian Electrical Code in Canada. Be sure to connect the ground wire or conduit to a solid office (earth) ground. A closed loop ring is recommended for terminating the ground conductor at the ground stud.
- Run two wires from the circuit breaker box to a source of 48 VDC.
- A DC-powered PTX1000 is intended only for installation in a restricted-access location. In the United States, a restricted-access area is one in accordance with Articles 110-16, 110-17, and 110-18 of the National Electrical Code ANSI/NFPA 70.

NOTE: Primary overcurrent protection is provided by the building circuit breaker. This breaker should protect against excess currents, short circuits, and earth faults in accordance with NEC ANSI/NFPA70.

DC Power Copper Conductors Warning

WARNING: Use copper conductors only.

Waarschuwing Gebruik alleen koperen geleiders.

Varoitus Käytä vain kuparijohtimia.

Attention Utilisez uniquement des conducteurs en cuivre.

Warnung Verwenden Sie ausschließlich Kupferleiter.

Avvertenza Usate unicamente dei conduttori di rame.

Advarsel Bruk bare kobberledninger.

Aviso Utilize apenas fios condutores de cobre.

¡Atención! Emplee sólo conductores de cobre.

Varning! Använd endast ledare av koppar.

DC Power Disconnection Warning

WARNING: Before performing any of the DC power procedures, ensure that power is removed from the DC circuit. To ensure that all power is off, locate the circuit breaker on the panel board that services the DC circuit, switch the circuit breaker to the OFF position, and tape the device handle of the circuit breaker in the OFF position.

Waarschuwing Voordat u een van de onderstaande procedures uitvoert, dient u te controleren of de stroom naar het gelijkstroom circuit uitgeschakeld is. Om u ervan te verzekeren dat alle stroom UIT is geschakeld, kiest u op het schakelbord de

stroomverbreker die het gelijkstroom circuit bedient, draait de stroomverbreker naar de UIT positie en plakt de schakelaarhendel van de stroomverbreker met plakband in de UIT positie vast.

Varoitus Varmista, että tasavirtapiirissä ei ole virtaa ennen seuraavien toimenpiteiden suorittamista. Varmistaaksesi, että virta on KATKAISTU täysin, paikanna tasavirrasta huolehtivassa kojetaulussa sijaitseva suojakytkin, käännä suojakytkin KATKAISTU-asentoon ja teippaa suojakytkimen varsi niin, että se pysyy KATKAISTU-asennossa.

Avertissement Avant de pratiquer l'une quelconque des procédures ci-dessous, vérifier que le circuit en courant continu n'est plus sous tension. Pour en être sûr, localiser le disjoncteur situé sur le panneau de service du circuit en courant continu, placer le disjoncteur en position fermée (OFF) et, à l'aide d'un ruban adhésif, bloquer la poignée du disjoncteur en position OFF.

Warnung Vor Ausführung der folgenden Vorgänge ist sicherzustellen, daß die Gleichstromschaltung keinen Strom erhält. Um sicherzustellen, daß sämtlicher Strom abgestellt ist, machen Sie auf der Schalttafel den Unterbrecher für die Gleichstromschaltung ausfindig, stellen Sie den Unterbrecher auf AUS, und kleben Sie den Schaltergriff des Unterbrechers mit Klebeband in der AUS-Stellung fest.

Avvertenza Prima di svolgere una qualsiasi delle procedure seguenti, verificare che il circuito CC non sia alimentato. Per verificare che tutta l'alimentazione sia scollegata (OFF), individuare l'interruttore automatico sul quadro strumenti che alimenta il circuito CC, mettere l'interruttore in posizione OFF e fissarlo con nastro adesivo in tale posizione.

Advarsel Før noen av disse prosedyrene utføres, kontroller at strømmen er frakoblet likestrømkretsen. Sørg for at all strøm er slått AV. Dette gjøres ved å lokalisere strømbryteren på brytertavlen som betjener likestrømkretsen, slå strømbryteren AV og teipe bryterhåndtaket på strømbryteren i AV-stilling.

Aviso Antes de executar um dos seguintes procedimentos, certifique-se que desligou a fonte de alimentação de energia do circuito de corrente contínua. Para se assegurar que toda a corrente foi DESLIGADA, localize o disjuntor no painel que serve o circuito de corrente contínua e coloque-o na posição OFF (Desligado), segurando nessa posição a manivela do interruptor do disjuntor com fita isoladora.

¡Atención! Antes de proceder con los siguientes pasos, comprobar que la alimentación del circuito de corriente continua (CC) esté cortada (OFF). Para asegurarse de que toda la alimentación esté cortada (OFF), localizar el interruptor automático en el panel que alimenta al circuito de corriente continua, cambiar el interruptor automático a la

posición de Apagado (OFF), y sujetar con cinta la palanca del interruptor automático en posición de Apagado (OFF).

Varning! Innan du utför någon av följande procedurer måste du kontrollera att strömförsörjningen till likströmskretsen är bruten. Kontrollera att all strömförsörjning är BRUTEN genom att slå AV det överspänningsskydd som skyddar likströmskretsen och tejpa fast överspänningsskyddets omkopplare i FRÅN-läget.

DC Power Grounding Requirements and Warning

An insulated grounding conductor that is identical in size to the grounded and ungrounded branch circuit supply conductors but is identifiable by green and yellow stripes is installed as part of the branch circuit that supplies the device. The grounding conductor is a separately derived system at the supply transformer or motor generator set.

WARNING: When you install the device, the ground connection must always be made first and disconnected last.

Waarschuwing Bij de installatie van het toestel moet de aardverbinding altijd het eerste worden gemaakt en het laatste worden losgemaakt.

Varoitus Laitetta asennettaessa on maahan yhdistäminen aina tehtävä ensiksi ja maadoituksen irti kytkeminen viimeiseksi.

Avertissement Lors de l'installation de l'appareil, la mise à la terre doit toujours être connectée en premier et déconnectée en dernier.

Warnung Der Erdanschluß muß bei der Installation der Einheit immer zuerst hergestellt und zuletzt abgetrennt werden.

Avvertenza In fase di installazione dell'unità, eseguire sempre per primo il collegamento a massa e disconnetterlo per ultimo.

Advarsel Når enheten installeres, må jordledningen alltid tilkobles først og frakobles sist.

Aviso Ao instalar a unidade, a ligação à terra deverá ser sempre a primeira a ser ligada, e a última a ser desligada.

¡Atención! Al instalar el equipo, conectar la tierra la primera y desconectarla la última.

Varning! Vid installation av enheten måste jordledningen alltid anslutas först och kopplas bort sist.

DC Power Wiring Sequence Warning

WARNING: Wire the DC power supply using the appropriate lugs. When connecting power, the proper wiring sequence is ground to ground, +RTN to +RTN, then –48 V to –48 V. When disconnecting power, the proper wiring sequence is –48 V to –48 V, +RTN to +RTN, then ground to ground. Note that the ground wire must always be connected first and disconnected last.

Waarschuwing De juiste bedradingsvolgorde verbonden is aarde naar aarde, +RTN naar +RTN, en –48 V naar – 48 V. De juiste bedradingsvolgorde losgemaakt is en –48 naar –48 V, +RTN naar +RTN, aarde naar aarde.

Varoitus Oikea yhdistettava kytkentajarjestys on maajohto maajohtoon, +RTN varten +RTN, –48 V varten – 48 V. Oikea irrotettava kytkentajarjestys on –48 V varten – 48 V, +RTN varten +RTN, maajohto maajohtoon.

Avertissement Câblez l'approvisionnement d'alimentation CC En utilisant les crochets appropriés à l'extrémité de câblage. En reliant la puissance, l'ordre approprié de câblage est rectifié pour rectifier, +RTN à +RTN, puis –48 V à –48 V. En débranchant la puissance, l'ordre approprié de câblage est –48 V à –48 V, +RTN à +RTN, a alors rectifié pour rectifier. Notez que le fil de masse devrait toujours être relié d'abord et débranché pour la dernière fois. Notez que le fil de masse devrait toujours être relié d'abord et débranché pour la dernière fois.

Warnung Die Stromzufuhr ist nur mit geeigneten Ringösen an das DC Netzteil anzuschliessen. Die richtige Anschlusssequenz ist: Erdanschluss zu Erdanschluss, +RTN zu +RTN und dann -48V zu -48V. Die richtige Sequenz zum Abtrennen der Stromversorgung ist -48V zu -48V, +RTN zu +RTN und dann Erdanschluss zu Erdanschluss. Es ist zu beachten dass der Erdanschluss immer zuerst angeschlossen und als letztes abgetrennt wird.

Avvertenza Mostra la morsettiera dell alimentatore CC. Cablare l'alimentatore CC usando i connettori adatti all'estremità del cablaggio, come illustrato. La corretta sequenza di cablaggio è da massa a massa, da positivo a positivo (da linea ad L) e da

negativo a negativo (da neutro a N). Tenere presente che il filo di massa deve sempre venire collegato per primo e scollegato per ultimo.

Advarsel Riktig tilkoples tilkoplingssekvens er jord til jord, +RTN til +RTN, –48 V til –48 V. Riktig frakoples tilkoplingssekvens er –48 V til – 48 V, +RTN til +RTN, jord til jord.

Aviso Ate con alambre la fuente de potencia cc Usando los terminales apropiados en el extremo del cableado. Al conectar potencia, la secuencia apropiada del cableado se muele para moler, +RTN a +RTN, entonces –48 V a –48 V. Al desconectar potencia, la secuencia apropiada del cableado es –48 V a –48 V, +RTN a +RTN, entonces molió para moler. Observe que el alambre de tierra se debe conectar siempre primero y desconectar por último. Observe que el alambre de tierra se debe conectar siempre primero y desconectar por último.

¡Atención! Wire a fonte de alimentação de DC Usando os talões apropriados nan EXtremidade da fiação. Ao conectar a potência, a seqüência apropriada da fiação é moída para moer, +RTN a +RTN, então –48 V a –48 V. Ao desconectar a potência, a seqüência apropriada da fiação é –48 V a –48 V, +RTN a +RTN, moeu então para moer. Anote que o fio à terra deve sempre ser conectado primeiramente e desconectado por último. Anote que o fio à terra deve sempre ser conectado primeiramente e desconectado por último.

Varning! Korrekt kopplingssekvens ar jord till jord, +RTN till +RTN, –48 V till –48 V. Korrekt kopplas kopplingssekvens ar –48 V till –48 V, +RTN till +RTN, jord till jord.

DC Power Wiring Terminations Warning

WARNING: When stranded wiring is required, use approved wiring terminations, such as closed-loop or spade-type with upturned lugs. These terminations must be the appropriate size for the wires and must clamp both the insulation and conductor.

Waarschuwing Wanneer geslagen bedrading vereist is, dient u bedrading te gebruiken die voorzien is van goedgekeurde aansluitingspunten, zoals het gesloten-lus type of het grijperschop type waarbij de aansluitpunten omhoog wijzen. Deze aansluitpunten dienen de juiste maat voor de draden te hebben en dienen zowel de isolatie als de geleider vast te klemmen.

Varoitus Jos säikeellinen johdin on tarpeen, käytä hyväksyttyä johdinliitäntää, esimerkiksi suljettua silmukkaa tai kourumaista liitäntää, jossa on ylöspäin käännetyt

kiinnityskorvat. Tällaisten liitäntöjen tulee olla kooltaan johtimiin sopivia ja niiden tulee puristaa yhteen sekä eristeen että johdinosan.

Avertissement Quand des fils torsadés sont nécessaires, utiliser des douilles terminales homologuées telles que celles à circuit fermé ou du type à plage ouverte avec cosses rebroussées. Ces douilles terminales doivent être de la taille qui convient aux fils et doivent être refermées sur la gaine isolante et sur le conducteur.

Warnung Wenn Litzenverdrahtung erforderlich ist, sind zugelassene Verdrahtungsabschlüsse, z.B. für einen geschlossenen Regelkreis oder gabelförmig, mit nach oben gerichteten Kabelschuhen zu verwenden. Diese Abschlüsse sollten die angemessene Größe für die Drähte haben und sowohl die Isolierung als auch den Leiter festklemmen.

Avvertenza Quando occorre usare trecce, usare connettori omologati, come quelli a occhiello o a forcella con linguette rivolte verso l'alto. I connettori devono avere la misura adatta per il cablaggio e devono serrare sia l'isolante che il conduttore.

Advarsel Hvis det er nødvendig med flertrådede ledninger, brukes godkjente ledningsavslutninger, som for eksempel lukket sløyfe eller spadetype med oppoverbøyde kabelsko. Disse avslutningene skal ha riktig størrelse i forhold til ledningene, og skal klemme sammen både isolasjonen og lederen.

Aviso Quando forem requeridas montagens de instalação eléctrica de cabo torcido, use terminações de cabo aprovadas, tais como, terminações de cabo em circuito fechado e planas com terminais de orelha voltados para cima. Estas terminações de cabo deverão ser do tamanho apropriado para os respectivos cabos, e deverão prender simultaneamente o isolamento e o fio condutor.

¡Atención! Cuando se necesite hilo trenzado, utilizar terminales para cables homologados, tales como las de tipo "bucle cerrado" o "espada", con las lengüetas de conexión vueltas hacia arriba. Estos terminales deberán ser del tamaño apropiado para los cables que se utilicen, y tendrán que sujetar tanto el aislante como el conductor.

Varning! När flertrådiga ledningar krävs måste godkända ledningskontakter användas, t.ex. kabelsko av sluten eller öppen typ med uppåtvänd tapp. Storleken på dessa kontakter måste vara avpassad till ledningarna och måste kunna hålla både isoleringen och ledaren fastklämda.

Multiple Power Supplies Disconnection Warning

WARNING: The network device has more than one power supply connection. All connections must be removed completely to remove power from the unit completely.

Waarschuwing Deze eenheid heeft meer dan één stroomtoevoerverbinding; alle verbindingen moeten volledig worden verwijderd om de stroom van deze eenheid volledig te verwijderen.

Varoitus Tässä laitteessa on useampia virtalähdekytkentöjä. Kaikki kytkennät on irrotettava kokonaan, jotta virta poistettaisiin täysin laitteesta.

Avertissement Cette unité est équipée de plusieurs raccordements d'alimentation. Pour supprimer tout courant électrique de l'unité, tous les cordons d'alimentation doivent être débranchés.

Warnung Diese Einheit verfügt über mehr als einen Stromanschluß; um Strom gänzlich von der Einheit fernzuhalten, müssen alle Stromzufuhren abgetrennt sein.

Avvertenza Questa unità ha più di una connessione per alimentatore elettrico; tutte le connessioni devono essere completamente rimosse per togliere l'elettricità dall'unità.

Advarsel Denne enheten har mer enn én strømtilkobling. Alle tilkoblinger må kobles helt fra for å eliminere strøm fra enheten.

Aviso Este dispositivo possui mais do que uma conexão de fonte de alimentação de energia; para poder remover a fonte de alimentação de energia, deverão ser desconectadas todas as conexões existentes.

¡Atención! Esta unidad tiene más de una conexión de suministros de alimentación; para eliminar la alimentación por completo, deben desconectarse completamente todas las conexiones.

Varning! Denna enhet har mer än en strömförsörjningsanslutning; alla anslutningar måste vara helt avlägsnade innan strömtillförseln till enheten är fullständigt bruten.

TN Power Warning

WARNING: The device is designed to work with a TN power system.

Waarschuwing Het apparaat is ontworpen om te functioneren met TN energiesystemen.

Varoitus Koje on suunniteltu toimimaan TN-sähkövoimajärjestelmien yhteydessä.

Avertissement Ce dispositif a été conçu pour fonctionner avec des systèmes d'alimentation TN.

Warnung Das Gerät ist für die Verwendung mit TN-Stromsystemen ausgelegt.

Avvertenza Il dispositivo è stato progettato per l'uso con sistemi di alimentazione TN.

Advarsel Utstyret er utfomet til bruk med TN-strømsystemer.

Aviso O dispositivo foi criado para operar com sistemas de corrente TN.

¡Atención! El equipo está diseñado para trabajar con sistemas de alimentación tipo TN.

Varning! Enheten är konstruerad för användning tillsammans med elkraftssystem av TN-typ.

PTX1000 Agency Approvals and Compliance Statements

IN THIS SECTION

- PTX1000 Agency Approvals | **156**
- Compliance Statements for EMC Requirements | **157**
- Compliance Statements for Environmental Requirements | **158**
- PTX1000 Compliance Statements for Acoustic Noise | **158**

PTX1000 Agency Approvals

IN THIS SECTION

- Compliance Statement for Argentina | 157

The PTX1000 complies with the following standards:

- Safety
  - CAN/CSA-22.2 No. 60950–1–07/UL 60950–1, 2nd Ed., Safety of Information Technology Equipment
  - EN 60825-1 Safety of Laser Products - Part 1: Equipment Classification, Requirements and User's Guide
- EMC
  - AS/NZS 3548 Class A (Australia/New Zealand)
  - EN55022 Class A (Europe)
  - FCC Part 15 Class A (USA)
  - VCCI Class A (Japan)
- Immunity
  - EN-61000-3-3 Voltage Fluctuations and Flicker
  - EN-61000-4-2 ESD
  - EN-61000-4-3 Radiated Immunity
  - EN-61000-4-4 EFT
  - EN-61000-4-5 Surge
  - EN-61000-4-6 Low Frequency Common Immunity
- ETSI EN-300386-2 Telecommunication Network Equipment. Electromagnetic Compatibility Requirements

Compliance Statement for Argentina

EQUIPO DE USO IDÓNEO.

Compliance Statements for EMC Requirements

IN THIS SECTION

- Canada | 157
- European Community | 157
- Israel | 157
- Japan | 158
- United States | 158

Canada

CAN ICES-3 (A)/NMB-3(A)

European Community

This is a Class A product. In a domestic environment, this product might cause radio interference in which case the user might be required to take adequate measures.

Israel

אזהרה

מוצר זה הוא מוצר Class A.
בסביבה ביתית,מוצר זה עלול לגרום הפרעות בתדר רדיו,ובמקרה זה, המשתמש עשוי להידרש לנקוט אמצעים מתאימים.

Translation from Hebrew—Warning: This product is Class A. In residential environments, the product might cause radio interference, and in such a situation, the user might be required to take adequate measures.

Japan

この装置は、クラス A 情報技術装置です。この装置を家庭環境で使用すると電波妨害を引き起こすことがあります。この場合には使用者が適切な対策を講ずるよう要求されることがあります。 VCCI-A

The preceding translates as follows:

This is a Class A product based on the standard of the Voluntary Control Council for Interference by Information Technology Equipment (VCCI). If this product is used near a radio or television receiver in a domestic environment, it might cause radio interference. Install and use the equipment according to the instruction manual. VCCI-A.

United States

The hardware equipment has been tested and found to comply with the limits for a Class A digital device, pursuant to Part 15 of the FCC Rules. These limits are designed to provide reasonable protection against harmful interference when the equipment is operated in a commercial environment. This equipment generates, uses, and can radiate radio frequency energy and, if not installed and used in accordance with the instruction manual, might cause harmful interference to radio communications. Operation of this equipment in a residential area is likely to cause harmful interference in which case the user will be required to correct the interference at his own expense.

Compliance Statements for Environmental Requirements

Batteries in this product are not based on mercury, lead, or cadmium substances. The batteries used in this product are in compliance with EU Directives 91/157/EEC, 93/86/EEC, and 98/101/EEC. The product documentation includes instructional information about the proper method of reclamation and recycling.

PTX1000 Compliance Statements for Acoustic Noise

Maschinenlärminformations-Verordnung - 3. GPSGV, der höchste Schalldruckpegel beträgt 70dB(A) oder weniger gemäss EN ISO 7779

Translation:

The emitted sound pressure is below 70 dB(A) per EN ISO 7779.

PTX1000 Compliance Statements for Acoustic Noise

Maschinenlärminformations-Verordnung - 3. GPSGV, der höchste Schalldruckpegel beträgt 70dB(A) oder weniger gemäss EN ISO 7779

Translation:

The emitted sound pressure is below 70 dB(A) per EN ISO 7779.