T640 Core Router Hardware Guide

Modified: 2019-08-01

Copyright © 2019, Juniper Networks, Inc.

Juniper Networks, Inc.
1133 Innovation Way
Sunnyvale, California 94089
USA
408-745-2000
www.juniper.net

Juniper Networks, the Juniper Networks logo, Juniper, and Junos are registered trademarks of Juniper Networks, Inc. in the United States and other countries. All other trademarks, service marks, registered marks, or registered service marks are the property of their respective owners.

Juniper Networks assumes no responsibility for any inaccuracies in this document. Juniper Networks reserves the right to change, modify, transfer, or otherwise revise this publication without notice.

T640 Core Router Hardware Guide
Copyright © 2019 Juniper Networks, Inc. All rights reserved.

The information in this document is current as of the date on the title page.

YEAR 2000 NOTICE

Juniper Networks hardware and software products are Year 2000 compliant. Junos OS has no known time-related limitations through the year 2038. However, the NTP application is known to have some difficulty in the year 2036.

END USER LICENSE AGREEMENT

The Juniper Networks product that is the subject of this technical documentation consists of (or is intended for use with) Juniper Networks software. Use of such software is subject to the terms and conditions of the End User License Agreement ("EULA") posted at https://support.juniper.net/support/eula/. By downloading, installing or using such software, you agree to the terms and conditions of that EULA.

Table of Contents

About the Documentation . . . xxix
Documentation and Release Notes . . . xxix
Using the Examples in This Manual . . . xxix
Merging a Full Example . . . xxx
Merging a Snippet . . . xxx
Documentation Conventions . . . xxxi
Documentation Feedback . . . xxxiii
Requesting Technical Support . . . xxxiii
Self-Help Online Tools and Resources . . . xxxiv
Creating a Service Request with JTAC . . . xxxiv

Part 1 Overview

Chapter 1 **System Overview and Architecture . . . 3**
T640 Router Description . . . 3
T640 Component Redundancy . . . 4
T640 System Architecture Description . . . 5
T640 Routing Engine Functions . . . 5
T640 Packet Forwarding Engine Architecture . . . 7
Data Flow Through the T640 Router . . . 7

Chapter 2 **T640 Router Release Notes . . . 11**
Outstanding Issues with the T640 Router . . . 11
Errata with the T640 Router Documentation . . . 12

Chapter 3 **Chassis Components and Descriptions . . . 13**
T640 Hardware Component Overview . . . 13
T640 Chassis Description . . . 15
T640 Midplane Description . . . 17
T640 Cable Management System Description . . . 19
T640 Connector Interface Panel (CIP) Description . . . 19
CIP Components . . . 19
Management Ports . . . 20
Alarm Relay Contacts . . . 21
T640 Connector Interface Panel (CIP) LEDs . . . 22
T640 Craft Interface Description . . . 22
T640 Craft Interface Alarm LEDs and ACO/LT Button . . . 23
T640 Craft Interface FPC LEDs and Online/Offline Buttons . . . 24
T640 Craft Interface Host Subsystem LEDs . . . 24
T640 Craft Interface LCD and Navigation Buttons . . . 25
T640 Craft Interface SIB LEDs . . . 26
T640 SONET Clock Generators (SCGs) Description . . . 27

T640 SONET Clock Generators (SCGs) LEDs . . . 28

Chapter 4 **Cooling System Components and Descriptions . . . 31**

T640 Cooling System Description . . . 31
Airflow . . . 31
Fan Trays . . . 32
Air Filters . . . 33
Power Supply Cooling System . . . 33

Chapter 5 **Host Subsystem Components and Descriptions . . . 35**

T640 Host Subsystem Description . . . 35
T640 Routing Engine Description . . . 36
T640 RE-600 Description . . . 37
T640 RE-600 LEDs . . . 39
T640 RE-1600 Description . . . 39
T640 RE-1600 LEDs . . . 41
T640 RE-C1800 Description . . . 42
RE-C1800 Components . . . 42
RE-C1800 Boot Order . . . 42
T640 RE-C1800 LEDs . . . 43
T640 RE-2000 Description . . . 44
T640 RE-2000 LEDs . . . 45
Routing Engine Specifications . . . 46
Supported Routing Engines by Router . . . 52
M7i Routing Engines . . . 52
M10i Routing Engines . . . 53
M40e Routing Engines . . . 53
M120 Routing Engines . . . 54
M320 Routing Engines . . . 54
MX5, MX10, MX40, and MX80 Routing Engine . . . 55
MX104 Routing Engines . . . 55
MX204 Routing Engine . . . 55
MX240 Routing Engines . . . 56
MX480 Routing Engines . . . 57
MX960 Routing Engines . . . 58
MX2008 Routing Engines . . . 59
MX2010 Routing Engines . . . 59
MX2020 Supported Routing Engines . . . 60
MX10003 Routing Engines . . . 61
MX10008 Routing Engines . . . 61
PTX1000 Routing Engines . . . 61
PTX3000 Routing Engines . . . 62
PTX5000 Routing Engines . . . 62
PTX10008 and PTX10016 Routing Engines . . . 63
T320 Routing Engines . . . 63
T640 Routing Engines . . . 64
T1600 Routing Engines . . . 65
T4000 Routing Engines . . . 65
TX Matrix Routing Engines . . . 66
TX Matrix Plus Routing Engines . . . 67

 Copyright © 2019, Juniper Networks, Inc.

TX Matrix Plus (with 3D SIBs) Routing Engines . . . 67
T640 LCC-CB Description . . . 67
T640 LCC-CB LEDs . . . 68
T640 Standard Control Boards Description . . . 69
T640 Standard Control Boards LEDs . . . 70
T640 T Series Control Boards (T-CBs) Description . . . 70
T640 T Series Control Boards (T-CBs) LEDs . . . 72

Chapter 6 **Line Card Components and Description . . . 73**

T640 FPC Description . . . 73
FPC Terminology . . . 74
Identifying T640 FPCs . . . 75
T640 FPCs Supported . . . 83
T640 PIC Description . . . 85
T640 PICs Supported . . . 86
T640 End-of-Life PICs Supported . . . 93
T640 PIC/FPC Compatibility . . . 95
PIC/FPC Compatibility (Type 1 FPCs and Type 1 PICs) . . . 95
PIC/FPC Compatibility (Type 2 FPCs and Type 2 PICs) . . . 97
PIC/FPC Compatibility (Type 3 FPCs and Type 3 PICs) . . . 98
PIC/FPC Compatibility (Type 4 FPCs and Type 4 PICs) . . . 100

Chapter 7 **Power System Components and Descriptions . . . 103**

T640 Power System Description . . . 103
T640 Two-Input 160-A DC Power Supply Description . . . 104
Two-Input 160-A DC Power Supply . . . 104
Two-Input 160-A DC Power Supply Inputs . . . 105
Two-Input 160-A DC Power Supply Load Sharing and Fault Tolerance . . . 105
T640 Two-Input 160-A DC Power Supply LEDs . . . 106
T640 Three-Input 240-A DC Power Supply Description . . . 107
Three-Input 240-A DC Power Supply . . . 107
Three-Input 240-A DC Power Supply Inputs . . . 107
Three-Input 240-A DC Power Supply Load Sharing and Fault Tolerance . . . 108
T640 Three-Input 240-A DC Power Supply LEDs . . . 108
T640 Four-Input 240-A DC Power Supply Description . . . 110
Four-Input 240-A DC Power Supply . . . 110
Four-Input 240-A DC Power Supply Inputs . . . 110
Four-Input 240-A DC Power Supply Load Sharing and Fault Tolerance . . . 110
T640 Four-Input 240-A DC Power Supply LEDs . . . 111
T640 Six-Input DC Power Supply Description . . . 112
Power Supply Components . . . 112
Inputs . . . 113
Redundancy . . . 113
T640 Six-Input DC Power Supply LEDs . . . 113
T640 Three-Phase Delta and Wye AC Power Supply Description . . . 114
Three-Phase Delta AC Power Supply . . . 114
Three-Phase Wye AC Power Supply . . . 116
AC Power Supply Load Sharing and Fault Tolerance . . . 117
T640 Three-Phase Delta and Wye AC Power Supply LEDs . . . 117

Copyright © 2019, Juniper Networks, Inc.

Chapter 8 Switch Fabric Components and Descriptions 119
T640 Switch Interface Boards (SIBs) Description 119

Part 2 Site Planning, Preparation, and Specifications

Chapter 9 Preparation Overview 125
T640 Site Preparation Checklist 125
T640 Chassis Grounding Cable and Lug Specifications 126
T640 Physical Specifications 127
T640 Rack Requirements 128
T640 Clearance Requirements for Airflow and Hardware Maintenance 130
T640 Environmental Specifications 130

Chapter 10 DC Power Requirements and Specifications 133
T640 DC Power System Electrical Specifications 133
T640 DC Power Supply Electrical Specifications 134
T640 DC Power System Requirements 136
T640 DC Power Distribution 138
T640 DC Power Cable and Lug Specifications 140

Chapter 11 AC Power Requirements and Specifications 143
T640 AC Power System Specifications 143
T640 Three-Phase Delta AC Power Supply Specifications 144
T640 Three-Phase Wye AC Power Supply Specifications 144
T640 AC Power Requirements 145
T640 AC Power Cord Specifications 147

Chapter 12 Network Cable and Transceiver Planning 149
Understanding Fiber-Optic Cable Signal Loss, Attenuation, and Dispersion 149
Signal Loss in Multimode and Single-Mode Fiber-Optic Cable 149
Attenuation and Dispersion in Fiber-Optic Cable 149
Calculating Power Budget and Power Margin for Fiber-Optic Cables 150
Calculating Power Budget for Fiber-Optic Cable 150
Calculating Power Margin for Fiber-Optic Cable 151

Chapter 13 Management Cable Specifications and Pinouts 153
T640 Routing Engine Interface Cable and Wire Specifications 153
T640 DB-9 Connector Pinouts for the Routing Engine AUXILIARY and CONSOLE Ports 154
T640 RJ-45 Connector Pinouts for the Routing Engine ETHERNET Port 154

Part 3 Initial Installation and Configuration

Chapter 14 Installation Overview 159
T640 Router Installation Summary 159

Chapter 15 Unpacking the T640 161
Tools and Parts Required to Unpack the T640 Router 161
Unpacking the T640 Router 161
Verifying the T640 Router Parts Received 163

 Copyright © 2019, Juniper Networks, Inc.

Chapter 16 Installing the Rack Mounting Hardware 167
Installing the T640 Mounting Hardware for a Four-Post Rack or Cabinet 167
Installing the T640 Mounting Hardware for an Open-Frame Rack 170
Chapter 17 Installing the T640 Router into a Rack 173
Overview of Installing the T640 Router in a Rack 173
Chapter 18 Installing the T640 Router With a Mechanical Lift 175
Overview of Installing a T640 Router Using a Mechanical Lift 175
Tools Required to Install the T640 Router Using a Mechanical Lift 175
Installing the T640 Router Using a Mechanical Lift 176
Removing the T640 Power Supplies 176
Attaching the T640 Router Installation Handle 177
Mounting the T640 Chassis Using a Mechanical Lift 179
Removing the T640 Router Installation Handle and Reinstalling the Power Supplies 182
Chapter 19 Installing the T640 Router Without a Mechanical Lift 185
Overview of Installing the T640 Router Without a Mechanical Lift 185
Tools and Parts Required to Install the T640 Router Without a Mechanical Lift 186
Removing Components from the T640 Chassis 186
Removing the T640 Power Supplies 187
Removing the T640 SIBs 188
Removing the T640 Control Boards 189
Removing the T640 SCGs 191
Removing the T640 Standard or Quiet Rear Fan Tray 192
Removing the T640 Cable Management System 193
Removing the T640 Standard or Quiet Front Fan Trays 194
Removing the T640 FPCs 196
Attaching the T640 Router Installation Handle 198
Installing the T640 Chassis in the Rack Manually 199
Reinstalling Components in the T640 Chassis 202
Reinstalling the T640 Standard or Quiet Rear Fan Tray 203
Reinstalling the T640 SCGs 204
Reinstalling the T640 Control Boards 205
Reinstalling the T640 SIBs 207
Reinstalling the T640 Power Supplies 208
Reinstalling the T640 FPCs 209
Reinstalling T640 Standard or Quiet Front Fan Trays 211
Reinstalling the T640 Cable Management System 213
Chapter 20 Connecting the T640 to Ground 215
Tools and Parts Required to Ground the T640 Router 215
Connecting the T640 Grounding Cable 216
Chapter 21 Connecting the T640 to External Devices 217
Overview of Connecting the T640 Router to External Devices 217
Tools and Parts Required to Connect the T640 Router to External Devices 218
Connecting the T640 Router to a Management Console or Auxiliary Device . . . 218
Connecting the T640 Router to a Network for Out-of-Band Management 221

Copyright © 2019, Juniper Networks, Inc.

Connecting the T640 Router to an External Alarm-Reporting Device 223
Connecting the T640 Router to an External Clocking Device 224
Connecting PIC Cables to the T640 Router 225

Chapter 22 **Providing Power to the T640 . . . . . 227**

Tools and Parts Required to Provide Power to the T640 Router 227
Connecting DC Power to a T640 Router with Two-Input 160-A DC Power Supplies 228
Connecting DC Power to a T640 Router with Three-input 240-A DC Power Supplies (2-INPUT Mode) 230
Connecting DC Power to a T640 Router with Four-Input 240-A DC Power Supplies 232
Connecting DC Power to the T640 Router (Six 60-A Inputs to Six-Input DC Power Supplies) 235
Connecting DC Power to the T640 Router (Five 60-A Inputs to Six-Input DC Power Supplies) 239
Connecting DC Power to the T640 Router (Four 60-A Inputs to Six-Input DC Power Supplies) 244
Powering On a DC-Powered T640 Router 247
Connecting AC Power to a T640 Router with Three-Phase Delta AC Power Supplies 249
Connecting AC Power to a T640 Router with Three-Phase Wye AC Power Supplies 252
Powering On an AC-Powered T640 Router 254
Powering Off the T640 Router 256

Chapter 23 **Configuring the Junos OS Software 259**

Preparing to Configure the T640 Router 259
Initially Configuring the T640 Router 259
Entering Configuration Mode 260
Configuring User Accounts and Passwords 260
Configuring System Attributes 261
Committing the Configuration 262
Configuring DC Power on a T640 Router 263
Configuring DC Power on a T640 Router (Five 60-A Cables on a Six-Input DC Power Supply) 264
Configuring DC Power on a T640 (Four 60-A Cables on a Six-Input DC Power Supply) 264

Part 4 Installing and Replacing Components

Chapter 24 **Overview of Installing and Replacing Components 269**

T640 Field-Replaceable Units 269
Tools and Parts Required to Replace the T640 Hardware Components 270

 Copyright © 2019, Juniper Networks, Inc.

Chapter 25 Replacing Chassis Components 273
Replacing a T640 Craft Interface 273
Removing a T640 Craft Interface 273
Installing a T640 Craft Interface 274
Replacing the T640 CIP 275
Removing a T640 CIP 275
Installing a T640 CIP 277
Replacing the T640 Alarm Relay Wires 278
Replacing the T640 Console or Auxiliary Cable 281
Replacing the T640 Management Ethernet Cable 283
Replacing a T640 SCG 285
Removing a T640 SCG 285
Installing a T640 SCG 286
Chapter 26 Replacing Cooling System Components 289
Replacing a T640 Air Filter 289
Removing a Front T640 Air Filter 289
Installing a Front T640 Air Filter 291
Removing a Rear T640 Air Filter 292
Installing a Rear T640 Air Filter 294
Replacing the T640 Standard Lower Front Fan Tray 296
Removing the T640 Standard Lower Front Fan Tray 296
Installing the T640 Standard Lower Front Fan Tray 297
Replacing the T640 Standard Upper Front Fan Tray 298
Removing the T640 Standard Upper Front Fan Tray 298
Installing the T640 Standard Upper Front Fan Tray 299
Replacing the T640 Standard Rear Fan Tray 300
Removing the T640 Standard Rear Fan Tray 300
Installing the T640 Standard Rear Fan Tray 301
Upgrading to the T640 Quiet Fan Trays 303
Upgrading the Standard Lower Front Fan Tray to a Quiet Lower Front Fan Tray 303
Removing the Standard Upper Front Fan Tray 304
Removing the Craft Interface 305
Installing the Air Deflector and Craft Interface 306
Installing the Quiet Upper Front Fan Tray 306
Upgrading the Standard Rear Fan Tray to a Quiet Rear Fan Tray 307
Replacing the T640 Quiet Lower Front Fan Tray 309
Removing the T640 Quiet Lower Front Fan Tray 310
Installing the T640 Quiet Lower Front Fan Tray 311
Replacing the T640 Quiet Upper Front Fan Tray 312
Removing the T640 Quiet Upper Front Fan Tray 312
Installing the T640 Quiet Upper Front Fan Tray 313
Replacing the T640 Quiet Rear Fan Tray 314
Removing the T640 Quiet Rear Fan Tray 315
Installing the T640 Quiet Rear Fan Tray 316

Copyright © 2019, Juniper Networks, Inc.

Chapter 27 Replacing Host Subsystem Components 319
Replacing the T640 Host Subsystem Components 319
Taking the T640 Host Subsystem Offline 319
Replacing a T640 LCC-CB 322
Removing a T640 LCC-CB 323
Installing a T640 LCC-CB 324
Replacing a T640 Standard Control Board or T-CB 325
Removing a T640 Standard Control Board or T-CB 326
Installing a T640 Standard Control Board or T-CB 327
Replacing a T640 Routing Engine 329
Removing a T640 Routing Engine 330
Installing a T640 Routing Engine 331
Replacing a CompactFlash Card in a T640 RE-C1800 Routing Engine 333
Preparing to Replace a CompactFlash Card in a T640 RE-C180 Routing Engine 334
Removing a CompactFlash Card in a T640 RE-C1800 Routing Engine 334
Installing a CompactFlash Card in a T640 RE-C1800 Routing Engine 335
Copying the Junos OS to the CompactFlash Card in a T640 RE-C1800 Routing Engine 336
Replacing a DIMM Module in a T640 Routing Engine 337
Removing a T640 DIMM Module 337
Installing a T640 DIMM Module 337
Replacing a PC Card in a T640 Routing Engine 338
Removing a T640 PC Card 339
Installing a T640 PC Card 340
Replacing a Solid-State Disk in a T640 RE-C1800 Routing Engine 341
Preparing to Replace a Solid-State Disk in a T640 RE-C1800 Routing Engine 341
Removing a Solid-State Disk in a T640 RE-C1800 Routing Engine 342
Installing a Solid-State Disk in a T640 RE-C1800 Routing Engine 343
Copying the Junos OS to the Solid-State Disk in a T640 RE-C1800 Routing Engine 344
Chapter 28 Replacing Line Card Components 345
Replacing a T640 FPC 345
Removing a T640 FPC 345
Installing a T640 FPC 348
Replacing a T640 PIC 352
Removing a T640 PIC 353
Installing a T640 PIC 355
Replacing T640 PIC Cables 358
Removing a T640 PIC Cable 358
Installing a T640 PIC Cable 359

 Copyright © 2019, Juniper Networks, Inc.

Chapter 29 Replacing Power System Components 363
Replacing a T640 Two-Input 160-A DC Power Supply 363
Removing a T640 Two-Input 160-A DC Power Supply 363
Installing a T640 Two-Input DC Power Supply 366
Replacing a T640 Three-Input 240-A DC Power Supply 370
Removing a T640 Three-Input 240-A DC Power Supply 371
Setting the Input Mode Switch on a Three-Input 240-A DC Power Supply for a T640 Router 374
Installing a T640 Three-Input 240-A DC Power Supply 375
Replacing the T640 Cable Restraint on a Three-Input 240-A DC Power Supply 376
Removing the T640 Standard Cable Restraint from a Three-Input 240-A DC Power Supply 377
Installing the T640 Optional Cable Restraint on a Three-Input 240-A DC Power Supply 377
Connecting DC Power to a Three-Input 240-A DC Power Supply in a T640 Router 378
Powering On a T640 Replacement Three-Input 240-A DC Power Supply 380
Replacing a T640 Four-Input 240-A DC Power Supply 382
Removing a T640 Four-Input 240-A DC Power Supply 382
Installing a T640 Four-Input 240-A DC Power Supply 385
Replacing a T640 DC Power Supply Cable on a Two-Input 160-A Power Supply, Three-Input 240-A DC Power Supply, or a Four-Input 240-A DC Power Supply 388
Removing a T640 DC Power Supply Cable from a Two-Input 160-A Power Supply, Three-Input 240-A DC Power Supply, or a Four-Input 240-A DC Power Supply 388
Installing a T640 DC Power Supply Cable on a Two-Input 160-A Power Supply, Three-Input 240-A DC Power Supply, or a Four-Input 240-A DC Power Supply 391
Replacing a T640 Six-Input DC Power Supply 395
Removing a T640 Six-Input DC Power Supply 396
Installing a T640 Six-Input DC Power Supply 398
Replacing a T640 DC Power Supply Cable on a Six-Input DC Power Supply . . . 401
Removing a T640 DC Power Supply Cable from a Six-Input DC Power Supply 401
Installing a T640 DC Power Supply Cable on a Six-Input DC Power Supply 402
Replacing a T640 Six-Input DC Power Supply Front Air Filter 404
Removing a T640 Six-Input DC Power Supply Front Air Filter 404
Installing a T640 Six-Input DC Power Supply Front Air Filter 404
Replacing a T640 Six-Input DC Power Supply Side Air Filter 404
Removing a T640 Six-Input DC Power Supply Side Air Filter 405
Installing a T640 Six-Input DC Power Supply Side Air Filter 405
Replacing a Front Air Filter Element on a T640 AC or DC Power Supply 406
Removing a Front Air Filter Element on a T640 AC or DC Power Supply . . . 406
Installing a Front Air Filter Element on a T640 AC or DC Power Supply . . . 407

Copyright © 2019, Juniper Networks, Inc.

Replacing a Side Air Filter on a T640 AC Power Supply 408
Removing a Side Air Filter on a T640 AC Power Supply 409
Installing a Side Air Filter on a T640 AC Power Supply 410
Replacing a T640 Three-Phase Delta AC Power Supply 412
Removing a T640 Three-Phase Delta AC Power Supply 412
Installing a T640 Three-Phase Delta AC Power Supply 416
Replacing a T640 Three-Phase Delta AC Power Supply Cord 420
Removing a T640 Three-Phase Delta AC Power Supply Cord 420
Installing a T640 Three-Phase Delta AC Power Supply Cord 423
Replacing a T640 Three-Phase Wye AC Power Supply 426
Removing a T640 Three-Phase Wye AC Power Supply 426
Installing a T640 Three-Phase Wye AC Power Supply 429
Replacing a T640 Three-Phase Wye AC Power Supply Cord 433
Removing a T640 Three-Phase Wye AC Power Supply Cord 433
Installing a T640 Three-Phase Wye AC Power Supply Cord 436

Chapter 30 **Replacing Switch Fabric Components 439**

Replacing a T640 SFP 439
Removing a T640 SFP 440
Installing a T640 SFP 441
Replacing a T640 SIB 443
Removing a T640 Standard SIB or Standard SIB Version B 443
Installing a T640 Standard SIB or Standard SIB Version B 444
Upgrading to a T640 Standard SIB Version B 446
Preparing to Upgrade to a T640 Standard SIB Version B 446
Replacing T640 Standard SIBs with Standard SIB Version B 447
Removing a T640-SIB 448
Installing a T640-SIB 450
Upgrading to a T640 Standard SIB Version B 452
Preparing to Upgrade to a T640 Standard SIB Version B 452
Replacing T640 Standard SIBs with Standard SIB Version B 453
Replacing a T640 XENPAK Module 454
Removing a T640 XENPAK Module 454
Installing a T640 XENPAK Module 455

Part 5 Maintaining the Chassis and Components

Chapter 31 **Routine Maintenance Procedures 461**

Routine Maintenance Procedures for the T640 Router 461

Chapter 32 **Maintaining Components 463**

Tools and Parts Required to Maintain the T640 Hardware Components 463
Maintaining the T640 SCGs 463
Maintaining the T640 Air Filters 464
Maintaining the T640 Fan Trays 465
Maintaining the T640 Host Subsystem 467
Maintaining the T640 Routing Engines 468
Maintaining the T640 Control Boards 469

 Copyright © 2019, Juniper Networks, Inc.

Maintaining T640 FPCs 470
Holding and Storing T640 FPCs 471
Holding T640 FPCs 471
Storing T640 FPCs 475
Maintaining T640 PICs and PIC Cables 476
Maintaining the T640 Power Supplies 477
Maintaining the T640 SIBs 481

Part 6 Troubleshooting Hardware

Chapter 33 **Troubleshooting Components 485**

Overview of Troubleshooting Resources for the T640 Router 485
T640 LED Overview 486
Craft Interface LEDs 486
Component LEDs 487
T640 Alarm Messages Overview 488
Chassis Alarm Messages 488
Interface Alarm Messages 488
Troubleshooting the T640 Craft Interface 489
Troubleshooting the T640 SONET Clock Generators 490
Troubleshooting the T640 Cooling System 491
Troubleshooting the T640 Host Subsystem 494
Troubleshooting the T640 Control Board 495
Troubleshooting the T640 FPCs 496
Troubleshooting the T640 PICs 497
Troubleshooting the T640 Power System 498
Troubleshooting the T640 SIBs 501

Part 7 Contacting Customer Support and Returning the Chassis or Components

Chapter 34 **Contacting Customer Support 505**

Contacting Customer Support 505

Chapter 35 **Locating Component Serial Numbers 507**

Locating T640 Component Serial Numbers Using the CLI 507
T640 Component Serial Number Label Locations 508
Control Board Serial Number Label 508
CIP Serial Number Label 509
Craft Interface Serial Number Label 509
FPC Serial Number Label 510
PIC Serial Number Label 510
Power Supply Serial Number Label 511
Routing Engine Serial Number Label 512
SCG Serial Number Label 513
SIB Serial Number Label 513

Copyright © 2019, Juniper Networks, Inc.

Chapter 36 Packing and Returning Components 515
Returning a Hardware Component to Juniper Networks, Inc. 515
Tools and Parts Required to Remove Components from a T640 Router 516
Packing the T640 Router for Shipment 516
Packing T640 Router Components for Shipment 518

Part 8 Safety and Compliance Information

Chapter 37 General Safety Guidelines and Warnings 523
Definition of Safety Warning Levels 523
General Safety Guidelines for Juniper Networks Devices 525
General Safety Warnings for Juniper Networks Devices 526
Qualified Personnel Warning 526
Restricted-Access Area Warning 526
T640 Preventing Electrostatic Discharge Damage 528

Chapter 38 Fire Safety Requirements 531
Fire Safety Requirements for Juniper Networks Devices 531
General Fire Safety Requirements 531
Fire Suppression 531
Fire Suppression Equipment 531

Chapter 39 Installation Safety Guidelines and Warnings 533
T640 Installation Safety Guidelines 533
General Installation Safety Guidelines 533
T640 Chassis Lifting Guidelines 533
Installation Safety Warnings for Juniper Networks Devices 534
Intrabuilding Ports Warning 534
Installation Instructions Warning 534
Rack-Mounting Requirements and Warnings 535
Ramp Warning 538

Chapter 40 Laser and LED Safety Guidelines and Warnings 541
T640 General Laser Safety Guidelines 541
Laser Safety Warnings for Juniper Networks Devices 541
Class 1 Laser Product Warning 542
Class 1 LED Product Warning 542
Laser Beam Warning 543
Radiation from Open Port Apertures Warning 543

Chapter 41 Maintenance and Operational Safety Guidelines and Warnings 545
Maintenance and Operational Safety Warnings for Juniper Networks Devices . . 545
Battery Handling Warning 545
Jewelry Removal Warning 546
Lightning Activity Warning 547
Operating Temperature Warning 548
Product Disposal Warning 549

Chapter 42 Electrical Safety Guidelines and Warnings 551
In Case of an Electrical Accident 551
T640 General Electrical Safety Guidelines and Electrical Codes 551

 Copyright © 2019, Juniper Networks, Inc.

General Electrical Safety Warnings for Juniper Networks Devices 552
Grounded Equipment Warning 552
Grounding Requirements and Warning 553
Midplane Energy Hazard Warning 554
Multiple Power Supplies Disconnection Warning 554
Power Disconnection Warning 555
DC Power Electrical Safety Warnings for Juniper Networks Devices 556
DC Power Copper Conductors Warning 556
DC Power Disconnection Warning 556
DC Power Wiring Terminations Warning 558
T640 AC Power Electrical Safety Guidelines 559
Site Electrical Wiring Guidelines for Juniper Networks Devices 560
Distance Limitations for Signaling 560
Radio Frequency Interference 560
Electromagnetic Compatibility 560

Chapter 43 Agency Approvals and Compliance Statements 563

T640 Agency Approvals 563
Compliance Statements for EMC Requirements for Juniper Networks Devices (Canada) 564
T640 Compliance Statements for EMC Requirements (European Community) 565
Compliance Statements for EMC Requirements for Juniper Networks Devices (Israel) 565
Compliance Statements for EMC Requirements for Juniper Networks Devices (Japan) 565
Compliance Statements for EMC Requirements for Juniper Networks Devices (United States) 566
Compliance Statements for Environmental Requirements 566
T640 Compliance Statements for NEBS 566
T640 Compliance Statements for Acoustic Noise 566

Copyright © 2019, Juniper Networks, Inc.

Copyright © 2019, Juniper Networks, Inc.

List of Figures

Part 1 Overview

Chapter 1 System Overview and Architecture 3

Figure 1: Router Architecture 5
Figure 2: Control Packet Handling for Routing and Forwarding Table Updates 6
Figure 3: Data Flow Through the T640 Router 8

Chapter 3 Chassis Components and Descriptions 13

Figure 4: Front View of T640 Chassis 16
Figure 5: Rear View of T640 Chassis 17
Figure 6: T640 Midplane 18
Figure 7: Cable Management System 19
Figure 8: CIP 20
Figure 9: Front Panel of the T640 Craft Interface 23
Figure 10: T640 LCD in Idle Mode 25
Figure 11: T640 LCD in Alarm Mode 26
Figure 12: SCG with DB-9 Ports 27
Figure 13: SCG with RJ-48 ports 28
Figure 14: SCG with RJ-48 ports 29

Chapter 4 Cooling System Components and Descriptions 31

Figure 15: Airflow Through the Chassis 32
Figure 16: Quiet Upper Front Fan Tray 33
Figure 17: Quiet Lower Front Fan Tray 33

Chapter 5 Host Subsystem Components and Descriptions 35

Figure 18: Routing Engine 600 38
Figure 19: Routing Engine 1600 (RE-1600) 40
Figure 20: Routing Engine C1800 (RE-C1800) 42
Figure 21: RE-C1800 LEDs 43
Figure 22: Routing Engine 2000 (RE-2000) 45
Figure 23: LCC-CB 67
Figure 24: LCC-CB LEDs 68
Figure 25: T640 Standard Control Board 69
Figure 26: T-CB 71

Chapter 6 Line Card Components and Description 73

Figure 27: FPC Installed in a T640 Chassis 74
Figure 28: FPC Edges 75
Figure 29: Enhanced Scaling FPC1 Supported by the T640 Router 77
Figure 30: Standard FPC2 and FPC3 Supported by the T640 Router 78
Figure 31: Enhanced II FPC1, FPC2, and FPC3 Supported by the T640 Router . . . 79

Copyright © 2019, Juniper Networks, Inc.

Figure 32: Enhanced Scaling FPC2 Supported by the T640 Router 80
Figure 33: Enhanced Scaling FPC3 Supported by the T640 Router 81
Figure 34: Enhanced Scaling FPC4 Supported by the T640 Router 82
Figure 35: T640 Enhanced Scaling FPC4-1P Supported by the T640 Router 83

Chapter 7 **Power System Components and Descriptions 103**

Figure 36: Two-Input 160-A DC Power Supply 105
Figure 37: Three-Input 240-A DC Power Supply 107
Figure 38: Three-Input 240-A DC Power Supply LEDs 109
Figure 39: Four-Input 240-A DC Power Supply 110
Figure 40: Four-Input 240-A DC Power Supply LEDs 111
Figure 41: Six-Input DC Power Supply 113
Figure 42: Three-Phase Delta AC Power Supply 115
Figure 43: Three-Phase Delta AC Power Supply Connections 115
Figure 44: Three-Phase Delta AC Power Cord 116
Figure 45: Three-Phase Wye AC Power Supply 116
Figure 46: Three-Phase Wye AC Power Supply Connections 117
Figure 47: Wye Three-Phase AC Power Cord 117
Figure 48: Delta AC Power Supply LEDs 118

Chapter 8 **Switch Fabric Components and Descriptions 119**

Figure 49: Standard SIB or Standard SIB Version B 120
Figure 50: T640-SIB 120

Part 2 Site Planning, Preparation, and Specifications

Chapter 9 **Preparation Overview 125**

Figure 51: T640 DC Power and Grounding Cable Lug 127
Figure 52: Typical Open-Frame Rack 129
Figure 53: T640 Chassis Dimensions and Clearance Requirements 130

Chapter 10 **DC Power Requirements and Specifications 133**

Figure 54: Typical DC Source Cabling from PEM0 to Feed A 139
Figure 55: Typical DC Source Cabling from PEM1 to Feed B 139
Figure 56: T640 DC Power Cable Lug 140

Chapter 11 **AC Power Requirements and Specifications 143**

Figure 57: Three-Phase Delta AC Power Cord 147
Figure 58: Three-Phase Wye AC Power Cord 148

Part 3 Initial Installation and Configuration

Chapter 15 **Unpacking the T640 . . . . . 161**

Figure 59: Contents of the Shipping Crate 163

Chapter 16 **Installing the Rack Mounting Hardware 167**

Figure 60: Positioning the Spacer Bar on the Rack 169
Figure 61: Installing the Mounting Hardware for a Four-Post Rack or Cabinet . . . 170
Figure 62: Installing the Mounting Hardware for an Open-Frame Rack 171

Chapter 18 **Installing the T640 Router With a Mechanical Lift 175**

Figure 63: Removing a Power Supply Before Installing the Router 177

 Copyright © 2019, Juniper Networks, Inc.

Figure 64: Removing a Power Supply Before Installing the Installation Handle . . . 178
Figure 65: Attaching the Installation Handle . . . 179
Figure 66: Loading the Router onto the Lift . . . 181
Figure 67: Installing the Router in the Rack . . . 182
Figure 68: Reinstalling a Power Supply . . . 183

Chapter 19 **Installing the T640 Router Without a Mechanical Lift . . . 185**

Figure 69: Removing a Power Supply Before Installing the Router . . . 188
Figure 70: Removing a SIB . . . 189
Figure 71: Removing a T-CB . . . 190
Figure 72: Removing an LCC-CB . . . 191
Figure 73: Removing an SCG . . . 192
Figure 74: Removing the Rear Fan Tray . . . 193
Figure 75: Removing the Standard Upper Front Fan Tray . . . 195
Figure 76: Removing the Quiet Upper Front Fan Tray . . . 196
Figure 77: Removing a T640 FPC . . . 197
Figure 78: Removing a Power Supply Before Installing the Installation Handle . . . 199
Figure 79: Attaching the Installation Handle . . . 199
Figure 80: Attaching the Installation Handle . . . 200
Figure 81: Installing the Router in the Rack . . . 202
Figure 82: Reinstalling the Rear Fan Tray . . . 204
Figure 83: Reinstalling an SCG . . . 205
Figure 84: Reinstalling a T-CB . . . 206
Figure 85: Reinstalling an LCC-CB . . . 206
Figure 86: Reinstalling a SIB . . . 207
Figure 87: Reinstalling a Power Supply . . . 209
Figure 88: Reinstalling an FPC . . . 210
Figure 89: Reinstalling the Quiet Upper Front Fan Tray . . . 212
Figure 90: ReInstalling the Quiet Lower Front Fan Tray . . . 212
Figure 91: Reinstalling the Standard Upper Front Fan Tray . . . 212

Chapter 20 **Connecting the T640 to Ground . . . 215**

Figure 92: Grounding Lug . . . 215

Chapter 21 **Connecting the T640 to External Devices . . . 217**

Figure 93: Console and Auxiliary Serial Port Connector . . . 219
Figure 94: Console and Auxiliary Ports on the CIP . . . 220
Figure 95: Routing Engine Ethernet Cable Connector . . . 221
Figure 96: ETHERNET Port on the CIP . . . 222
Figure 97: Attaching a Cable to a PIC . . . 226

Chapter 22 **Providing Power to the T640 . . . 227**

Figure 98: Connecting DC Power to a Two-Input 160-A DC Power Supply . . . 230
Figure 99: Connecting DC Power to a Three-Input 240-A DC Power Supply in 2-INPUT Mode . . . 232
Figure 100: Connecting Power to the Four-Input 240-A DC Power Supply . . . 234
Figure 101: Connecting DC Power Cables . . . 237

Copyright © 2019, Juniper Networks, Inc.

Figure 102: Connecting Negative (–) DC Power Cables to INPUT 0, INPUT 1, INPUT 3, and INPUT 4 . . . 237
Figure 103: Connecting Negative (–) DC Power Cables to INPUT 2 and INPUT 5 . . . 238
Figure 104: Connecting Positive (+) DC Power Cables to RTN 2, RTN 5, RTN 0, RTN 1, RTN 3, and RTN 4 . . . 239
Figure 105: Connecting DC Power Cables . . . 241
Figure 106: Connecting Negative (–) DC Power Cables to INPUT 0, INPUT 1, INPUT 3, and INPUT 4 . . . 242
Figure 107: Connecting Negative (–) DC Power Cable to INPUT 2 . . . 242
Figure 108: Connecting Positive (+) DC Power Cable to RTN 2, RTN 0, RTN 1, RTN 3, RTN 4 . . . 243
Figure 109: Connecting DC Power Cables . . . 246
Figure 110: Connecting Negative (–) DC Power Cables to INPUT 0, INPUT 1, INPUT 3, and INPUT 4 . . . 246
Figure 111: Connecting Positive (+) DC Power Cables to RTN 0, RTN 1, RTN 3, and RTN 4 . . . 247
Figure 112: Connecting Power to a Three-Phase Delta AC Power Supply . . . 251
Figure 113: Connecting Power to the Three-Phase Wye AC Power Supply . . . 253
Figure 114: Fastening the AC Power Cord to the Power Supply . . . 254

Part 4 Installing and Replacing Components

Chapter 25 **Replacing Chassis Components . . . 273**

Figure 115: Removing a Craft Interface . . . 274
Figure 116: Installing a Replacement Craft Interface . . . 275
Figure 117: Removing a CIP . . . 276
Figure 118: Installing a CIP . . . 278
Figure 119: Routing Engine Alarm Relay Wires . . . 280
Figure 120: Routing Engine Console . . . 282
Figure 121: Ethernet Cable Connectors . . . 284
Figure 122: Removing an SCG . . . 286
Figure 123: Installing an SCG . . . 287

Chapter 26 **Replacing Cooling System Components . . . 289**

Figure 124: Removing the Front Air Filter . . . 290
Figure 125: Replacing the Front Filter Element . . . 290
Figure 126: Installing the Front Air Filter . . . 291
Figure 127: Removing the Rear Air Filter . . . 293
Figure 128: Removing the Rear Air Filter Element . . . 294
Figure 129: Installing the Rear Air Filter . . . 295
Figure 130: Removing a Standard Upper Front Fan Tray . . . 298
Figure 131: Installing an Upper Front Fan Tray . . . 299
Figure 132: Removing the Standard Rear Fan Tray . . . 301
Figure 133: Installing a Rear Fan Tray . . . 302
Figure 134: Installing a Quiet Lower Front Fan Tray . . . 304
Figure 135: Removing a Standard Upper Front Fan Tray . . . 305
Figure 136: Removing the Craft Interface . . . 306
Figure 137: Installing the Air Deflector . . . 306
Figure 138: Installing the Quiet Upper Front Fan Tray . . . 307

 Copyright © 2019, Juniper Networks, Inc.

Figure 139: Removing the Standard Rear Fan Tray 308
Figure 140: Installing the Quiet Rear Fan Tray 309
Figure 141: Removing the Quiet Lower Front Fan Tray 311
Figure 142: Installing the Quiet Lower Front Fan Tray 312
Figure 143: Removing the Quiet Upper Front Fan Tray 313
Figure 144: Installing the Quiet Upper Front Fan Tray 314
Figure 145: Removing the Quiet Rear Fan Tray 316
Figure 146: Installing the Quiet Rear Fan Tray 317

Chapter 27 **Replacing Host Subsystem Components 319**

Figure 147: Removing an LCC-CB 324
Figure 148: Installing an LCC-CB 325
Figure 149: Removing a Standard Control Board 327
Figure 150: Removing a T-CB 327
Figure 151: Installing a Standard Control Board 328
Figure 152: Installing a T-CB 329
Figure 153: Removing the Routing Engine Cover 331
Figure 154: Removing a Routing Engine 331
Figure 155: Installing a Routing Engine 333
Figure 156: Reinstalling the Routing Engine Cover 333
Figure 157: Removing a CompactFlash Card 335
Figure 158: Installing a CompactFlash Card 336
Figure 159: Installing the DIMM Module 338
Figure 160: Removing a PC Card 340
Figure 161: Installing a PC Card 341
Figure 162: Removing an SSD 343
Figure 163: Installing an SSD 343

Chapter 28 **Replacing Line Card Components 345**

Figure 164: Removing a T640 FPC 348
Figure 165: Installing an FPC 350
Figure 166: Installing a T640 FPC 352
Figure 167: Removing a PIC 355
Figure 168: Installing a PIC 357
Figure 169: Connecting Fiber-Optic Cable to a PIC 360

Chapter 29 **Replacing Power System Components 363**

Figure 170: Disconnecting Power Cables from a Two-Input 160-A DC Power Supply 364
Figure 171: Removing a Two-Input 160-A Power Supply 366
Figure 172: Rear of the Power Supply Showing Midplane Connectors 366
Figure 173: Installing a Replacement Two-Input 160-A DC Power Supply 369
Figure 174: Connecting Power Cables to a Two-Input 160-A DC Power Supply 370
Figure 175: Disconnecting Power Cables from the DC Power Supply 372
Figure 176: Rear of the Power Supply Showing Midplane Connectors 373
Figure 177: Removing a Three-Input 240-A DC Power Supply 373
Figure 178: Three-Input 240-A DC Power Supply 375
Figure 179: Installing a Three-Input 240-A DC Power Supply 376

Copyright © 2019, Juniper Networks, Inc.

Figure 180: Standard Cable Restraint on a Three-Input 240-A DC Power Supply . . . 377
Figure 181: Optional Cable Restraint on a Three-Input 240-A DC Power Supply . . . 378
Figure 182: Connecting Power Cables to the Power Supply . . . 380
Figure 183: Four-Input 240-A DC Power Supply . . . 382
Figure 184: Disconnecting Power Cables from the Four-Input 240-A DC Power Supply . . . 383
Figure 185: Removing a Four-Input 240-A DC Power Supply . . . 384
Figure 186: Rear of the Power Supply Showing Midplane Connectors . . . 384
Figure 187: Connecting a Power Cable to a Four-Input 240-A DC Power Supply . . . 386
Figure 188: Installing a Four-Input 240-A DC Power Supply . . . 387
Figure 189: Disconnecting a DC Power Cable from a Two-Input 160-A DC Power Supply . . . 389
Figure 190: Disconnecting a DC Power Cable from a Three-Input 240-A DC Power Supply . . . 390
Figure 191: Disconnecting a DC Power Cable from a Four-Input 240-A DC Power Supply . . . 391
Figure 192: Connecting a DC Power Cable to a Two-Input 160-A DC Power Supply . . . 394
Figure 193: Connecting a DC Power Cable to a Three-Input 240-A DC Power Supply . . . 394
Figure 194: Connecting a DC Power Cable to a Four-Input 240-A DC Power Supply . . . 395
Figure 195: DC Power Supply . . . 396
Figure 196: Disconnecting Power Cables from the DC Power Supply . . . 397
Figure 197: Removing a DC Power Supply . . . 398
Figure 198: Rear of the Power Supply Showing Midplane Connectors . . . 398
Figure 199: Inserting the DC Power Supply into the Chassis . . . 399
Figure 200: Attaching the DC Power Cable . . . 400
Figure 201: Disconnecting the DC Power Cable . . . 402
Figure 202: Connecting the DC Power Cable . . . 403
Figure 203: Removing the Power Supply Side Air Filter . . . 405
Figure 204: Installing the Power Supply Side Air Filter . . . 406
Figure 205: Removing a Front Air Filter Element . . . 407
Figure 206: Installing a Front Air Filter Element . . . 408
Figure 207: Removing the AC Power Supply Side Air Filter . . . 410
Figure 208: Installing the Side Power Supply Filter . . . 411
Figure 209: Three-Phase Delta AC Power Supply . . . 413
Figure 210: Disconnecting the Power Cord from a Three-Phase Delta AC Power Supply . . . 414
Figure 211: Removing a Three-Phase Delta AC Power Supply . . . 415
Figure 212: Rear of the Power Supply Showing Midplane Connectors . . . 416
Figure 213: Connecting Power to a Three-Phase Delta AC Power Supply . . . 418
Figure 214: Installing a Three-Phase Delta AC Power Supply . . . 420
Figure 215: Three-Phase Delta AC Power Supply . . . 421
Figure 216: Disconnecting the Power Cord from a Three-Phase Delta AC Power Supply . . . 422

Copyright © 2019, Juniper Networks, Inc.

Figure 217: Connecting Power to a Three-Phase Delta AC Power Supply 425
Figure 218: Three-Phase Wye AC Power Supply 427
Figure 219: Disconnecting the AC Power Cord from a Three-Phase Wye AC Power Supply 428
Figure 220: Removing a Three-Phase Wye AC Power Supply 429
Figure 221: Connecting Power to the Three–Phase Wye AC Power Supply 431
Figure 222: Installing a Three-Phase Wye AC Power Supply 432
Figure 223: Three-Phase Wye AC Power Supply 434
Figure 224: Disconnecting the AC Power Cord from a Three-Phase Wye AC Power Supply 435
Figure 225: Connecting Power to the Wye 3–Phase AC Power Supply 437

Chapter 30 **Replacing Switch Fabric Components 439**

Figure 226: Small Form-Factor Pluggable (SFP) 440
Figure 227: Removing a SIB 444
Figure 228: Installing a SIB 445
Figure 229: Removing a SIB 449
Figure 230: Removing a XENPAK Module 455
Figure 231: Installing a XENPAK Module 457

Part 5 Maintaining the Chassis and Components

Chapter 32 **Maintaining Components 463**

Figure 232: Do Not Grasp the Connector Edge 472
Figure 233: Do Not Carry an FPC with Only One Hand 473
Figure 234: Do Not Rest the FPC on an Edge 473
Figure 235: Holding an FPC Vertically 474
Figure 236: Do Not Stack FPCs 475

Part 7 Contacting Customer Support and Returning the Chassis or Components

Chapter 35 **Locating Component Serial Numbers 507**

Figure 237: Serial Number ID Label 508
Figure 238: T-CB Serial Number Label 508
Figure 239: LCC-CB Serial Number Label 509
Figure 240: CIP Serial Number Label 509
Figure 241: Craft Interface Serial Number Label 510
Figure 242: FPC Serial Number Label 510
Figure 243: PIC Serial Number Label 511
Figure 244: Two-Input 160-A DC Power Supply Serial Number Label 511
Figure 245: Three-Input 240-A DC Power Supply Serial Number Label 512
Figure 246: Six-Input DC Power Supply Serial Number Label 512
Figure 247: Routing Engine Serial Number Label 513
Figure 248: SCG Serial Number Label 513
Figure 249: Standard SIB and SIB Version B Serial Number Label 514
Figure 250: LCC-SIB Serial Number Label 514

Copyright © 2019, Juniper Networks, Inc.

Part 8 Safety and Compliance Information

Chapter 37 General Safety Guidelines and Warnings 523

Figure 251: Placing a Component into an Electrostatic Bag 528
Figure 252: ESD Point on the Front of T640 Chassis 529
Figure 253: ESD Point on the Rear View of T640 Chassis 530

Copyright © 2019, Juniper Networks, Inc.

List of Tables

About the Documentation xxix

Table 1: Notice Icons xxxi
Table 2: Text and Syntax Conventions xxxii

Part 1 Overview

Chapter 3 **Chassis Components and Descriptions 13**

Table 3: T640 Hardware Components 13
Table 4: CIP LEDs 22
Table 5: Alarm LEDs and Alarm Cutoff/Lamp Test Button 24
Table 6: FPC LEDs 24
Table 7: T640 Host Subsystem LEDs 25
Table 8: SIB LEDs on the Craft Interface 26
Table 9: Supported Power Supplies 27
Table 10: SCG LEDs 29

Chapter 5 **Host Subsystem Components and Descriptions 35**

Table 11: T640 Supported Routing Engines 37
Table 12: Routing Engine 600 LEDs 39
Table 13: Routing Engine 1600 LEDs 41
Table 14: Routing Engine C1800 LEDs 43
Table 15: Routing Engine 2000 LEDs 45
Table 16: Routing Engine Specifications 46
Table 17: Hardware Specifications of the RE-MX-X6, RE-MX-X8, RE-PTX-X8, RCBPTX, RE-QFX10002-60C, and RE-PTX10002-60C Routing Engines . . . 50
Table 18: End-of-Life Routing Engine Specifications 51
Table 19: M7i Routing Engines 53
Table 20: M10i Routing Engines 53
Table 21: M40e Routing Engines 53
Table 22: M120 Routing Engines 54
Table 23: M320 Routing Engines 54
Table 24: MX5, MX10, MX40, and MX80 Routing Engine 55
Table 25: MX104 Routing Engines 55
Table 26: MX204 Routing Engine 56
Table 27: MX240 Supported Routing Engines 56
Table 28: MX480 Supported Routing Engines 57
Table 29: MX960 Supported Routing Engines 58
Table 30: MX2008 Supported Routing Engines 59
Table 31: MX2010 Supported Routing Engines 59
Table 32: MX2020 Supported Routing Engines 60
Table 33: MX10003 Supported Routing Engines 61

Copyright © 2019, Juniper Networks, Inc.

Table 34: MX10008 Routing Engines 61
Table 35: PTX1000 Routing Engines 62
Table 36: PTX3000 Routing Engines 62
Table 37: PTX5000 Routing Engines 63
Table 38: PTX10008 and PTX10016 Routing Engines 63
Table 39: T320 Routing Engines 64
Table 40: T640 Routing Engines 64
Table 41: T1600 Routing Engines 65
Table 42: T4000 Routing Engines 66
Table 43: TX Matrix Routing Engines 66
Table 44: TX Matrix Plus Routing Engines 67
Table 45: Routing Engines on TX Matrix Plus with 3D SIBs 67
Table 46: LCC-CB LEDs 68
Table 47: Standard Control Board LEDs 70
Table 48: T-CB LEDs 72

Chapter 6 **Line Card Components and Description 73**

Table 49: Identifying the FPCs Supported by the T640 Router 75
Table 50: FPCs Supported by the T640 Router 84
Table 51: PICs Supported in the T640 Router 86
Table 52: End-of-Life PICs Supported in the T640 Router 93
Table 53: T640 PIC/FPC Compatibility Type 1 95
Table 54: T640 PIC/FPC Compatibility Type 2 97
Table 55: T640 PIC/FPC Compatibility Type 3 98
Table 56: T640 PIC/FPC Compatibility Type 4 100

Chapter 7 **Power System Components and Descriptions 103**

Table 57: Supported Power Supplies 104
Table 58: Components Powered by Each Input 105
Table 59: Fault Tolerance 106
Table 60: Two-Input 160-A DC Power Supply LEDs 106
Table 61: Components Powered by Each Three-Input 240-A DC Power Supply Input 108
Table 62: Fault Tolerance 108
Table 63: Three-Input 240-A DC Power Supply LEDs 109
Table 64: Components Powered by Each Four-Input 240-A DC Power Supply Input 110
Table 65: Four-Input 240-A DC Power Supply LEDs 111
Table 66: Components Powered by Each Six-Input DC Power Supply Input 113
Table 67: Six-Input DC Power Supply LEDs 114
Table 68: Delta AC Power Supply LEDs 118

Chapter 8 **Switch Fabric Components and Descriptions 119**

Table 69: Links to the SIBs From the FPCs 119

Part 2 **Site Planning, Preparation, and Specifications**

Chapter 9 **Preparation Overview 125**

Table 70: Site Preparation Checklist 125
Table 71: T640 Physical Specifications 127

 Copyright © 2019, Juniper Networks, Inc.

Table 72: Router Environmental Specifications 131

Chapter 10 **DC Power Requirements and Specifications 133**

Table 73: T640 Power System Electrical Specifications 133
Table 74: T640 Two-Input 160-A DC Power Supply Electrical Specifications . . . 134
Table 75: T640 Three-Input 240-A DC Power Supply Electrical Specifications 134
Table 76: Four-Input 240-A DC Power Supply Electrical Specifications 135
Table 77: Six-Input DC Power Supply Electrical Specifications 135
Table 78: T640 Component DC Power Requirements 136
Table 79: Number of Cables Required 140
Table 80: T640 Power Cable Specifications 140

Chapter 11 **AC Power Requirements and Specifications 143**

Table 81: T640 AC Power System Electrical Specifications 143
Table 82: Three-Phase Delta AC Power Supply Electrical Specifications 144
Table 83: Three-Phase Wye AC Power Supply Electrical Specifications 144
Table 84: T640 Base AC Power Requirements 145
Table 85: Typical AC Power Requirements for T640 Components 145
Table 86: Three-Phase Delta and Wye AC Power Cord Specifications 147

Chapter 12 **Network Cable and Transceiver Planning 149**

Table 87: Estimated Values for Factors Causing Link Loss 151

Chapter 13 **Management Cable Specifications and Pinouts 153**

Table 88: Cable and Wire Specifications for Routing Engine Management and Alarm Interfaces 153
Table 89: DB-9 Connector Pinouts 154
Table 90: RJ-45 Connector Pinouts 154

Part 3 Initial Installation and Configuration

Chapter 15 **Unpacking the T640 . . . . . 161**

Table 91: Router Parts List 163
Table 92: Accessory Box Parts List 165

Chapter 16 **Installing the Rack Mounting Hardware 167**

Table 93: T640 Four-Post or Cabinet Rack Mounting Hole Locations 167
Table 94: T640 Open-Frame Rack Mounting Hole Locations 172

Part 4 Installing and Replacing Components

Chapter 24 **Overview of Installing and Replacing Components 269**

Table 95: Field-Replaceable Units 270
Table 96: Tools and Parts Required for Component Replacement 270

Chapter 27 **Replacing Host Subsystem Components 319**

Table 97: Effect of Taking the Host Subsystem Offline 319

Part 6 Troubleshooting Hardware

Chapter 33 **Troubleshooting Components 485**

Copyright © 2019, Juniper Networks, Inc.

Table 98: SONET/SDH Interface Alarm Messages 488
Table 99: T640 Chassis Alarm Messages 489
Table 100: SCG Alarm Messages 491
Table 101: T640 Cooling System Alarm Messages 492
Table 102: T640 Host Subsystem Alarm Messages 494
Table 103: Control Board Alarm Messages 495
Table 104: FPC Alarm Messages 497
Table 105: T640 Power Supply Alarm Messages 499
Table 106: SIB Alarm Messages 501

Copyright © 2019, Juniper Networks, Inc.

About the Documentation

- Documentation and Release Notes on page xxix
- Using the Examples in This Manual on page xxix
- Documentation Conventions on page xxxi
- Documentation Feedback on page xxxiii
- Requesting Technical Support on page xxxiii

Documentation and Release Notes

To obtain the most current version of all Juniper Networks® technical documentation, see the product documentation page on the Juniper Networks website at https://www.juniper.net/documentation/.

If the information in the latest release notes differs from the information in the documentation, follow the product Release Notes.

Juniper Networks Books publishes books by Juniper Networks engineers and subject matter experts. These books go beyond the technical documentation to explore the nuances of network architecture, deployment, and administration. The current list can be viewed at https://www.juniper.net/books.

Using the Examples in This Manual

If you want to use the examples in this manual, you can use the **load merge** or the **load merge relative** command. These commands cause the software to merge the incoming configuration into the current candidate configuration. The example does not become active until you commit the candidate configuration.

If the example configuration contains the top level of the hierarchy (or multiple hierarchies), the example is a *full example*. In this case, use the **load merge** command.

If the example configuration does not start at the top level of the hierarchy, the example is a *snippet*. In this case, use the **load merge relative** command. These procedures are described in the following sections.

Merging a Full Example

To merge a full example, follow these steps:

1. From the HTML or PDF version of the manual, copy a configuration example into a text file, save the file with a name, and copy the file to a directory on your routing platform.

   For example, copy the following configuration to a file and name the file **ex-script.conf**. Copy the **ex-script.conf** file to the **/var/tmp** directory on your routing platform.

```
system {
   scripts {
      commit {
         file ex-script.xsl;
      }
   }
}
interfaces {
   fxp0 {
      disable;
      unit 0 {
         family inet {
            address 10.0.0.1/24;
         }
      }
   }
}
```

2. Merge the contents of the file into your routing platform configuration by issuing the **load merge** configuration mode command:

```
[edit]
user@host# load merge /var/tmp/ex-script.conf
load complete
```

Merging a Snippet

To merge a snippet, follow these steps:

1. From the HTML or PDF version of the manual, copy a configuration snippet into a text file, save the file with a name, and copy the file to a directory on your routing platform.

   For example, copy the following snippet to a file and name the file **ex-script-snippet.conf**. Copy the **ex-script-snippet.conf** file to the **/var/tmp** directory on your routing platform.

```
commit {
   file ex-script-snippet.xsl; }
```


Copyright © 2019, Juniper Networks, Inc.

2. Move to the hierarchy level that is relevant for this snippet by issuing the following configuration mode command:

```
[edit]
user@host# edit system scripts
[edit system scripts]
```

3. Merge the contents of the file into your routing platform configuration by issuing the **load merge relative** configuration mode command:

```
[edit system scripts]
user@host# load merge relative /var/tmp/ex-script-snippet.conf
load complete
```

For more information about the **load** command, see CLI Explorer.

Documentation Conventions

Table 1 on page xxxi defines notice icons used in this guide.

Table 1: Notice Icons

Icon	Meaning	Description
	Informational note	Indicates important features or instructions.
	Caution	Indicates a situation that might result in loss of data or hardware damage.
	Warning	Alerts you to the risk of personal injury or death.
	Laser warning	Alerts you to the risk of personal injury from a laser.
	Tip	Indicates helpful information.
	Best practice	Alerts you to a recommended use or implementation.

Table 2 on page xxxii defines the text and syntax conventions used in this guide.

Table 2: Text and Syntax Conventions

Convention	Description	Examples
Bold text like this	Represents text that you type.	To enter configuration mode, type the **configure** command: user@host> **configure**
`Fixed-width text like this`	Represents output that appears on the terminal screen.	`user@host>` **show chassis alarms** `No alarms currently active`
Italic text like this	• Introduces or emphasizes important new terms. • Identifies guide names. • Identifies RFC and Internet draft titles.	• A policy *term* is a named structure that defines match conditions and actions. • *Junos OS CLI User Guide* • RFC 1997, *BGP Communities Attribute*
Italic text like this	Represents variables (options for which you substitute a value) in commands or configuration statements.	Configure the machine's domain name: [edit] root@# **set system domain-name** *domain-name*
Text like this	Represents names of configuration statements, commands, files, and directories; configuration hierarchy levels; or labels on routing platform components.	• To configure a stub area, include the **stub** statement at the **[edit protocols ospf area area-id]** hierarchy level. • The console port is labeled **CONSOLE**.
< > (angle brackets)	Encloses optional keywords or variables.	**stub <default-metric *metric*>;**
| (pipe symbol)	Indicates a choice between the mutually exclusive keywords or variables on either side of the symbol. The set of choices is often enclosed in parentheses for clarity.	**broadcast | multicast** (***string1* | *string2* | *string3***)
# (pound sign)	Indicates a comment specified on the same line as the configuration statement to which it applies.	**rsvp { # Required for dynamic MPLS only**
[ ] (square brackets)	Encloses a variable for which you can substitute one or more values.	**community name members [*community-ids*]**

Indention and braces ({ })	Identifies a level in the configuration hierarchy.	[edit]
		routing-options {
		static {
		route default {
		nexthop *address*;
		retain;
		}
		}
		}

; (semicolon)	Identifies a leaf statement at a configuration hierarchy level.	

GUI Conventions

Copyright © 2019, Juniper Networks, Inc.

Table 2: Text and Syntax Conventions (continued)

Convention	Description	Examples
Bold text like this	Represents graphical user interface (GUI) items you click or select.	• In the Logical Interfaces box, select **All Interfaces**. • To cancel the configuration, click **Cancel**.
> (bold right angle bracket)	Separates levels in a hierarchy of menu selections.	In the configuration editor hierarchy, select **Protocols>Ospf**.

Documentation Feedback

We encourage you to provide feedback so that we can improve our documentation. You can use either of the following methods:

- Online feedback system—Click TechLibrary Feedback, on the lower right of any page on the Juniper Networks TechLibrary site, and do one of the following:

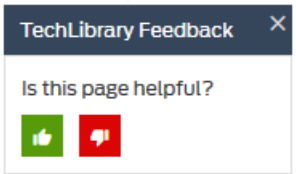

  - Click the thumbs-up icon if the information on the page was helpful to you.
  - Click the thumbs-down icon if the information on the page was not helpful to you or if you have suggestions for improvement, and use the pop-up form to provide feedback.

- E-mail—Send your comments to **techpubs-comments@juniper.net**. Include the document or topic name, URL or page number, and software version (if applicable).

Requesting Technical Support

Technical product support is available through the Juniper Networks Technical Assistance Center (JTAC). If you are a customer with an active Juniper Care or Partner Support Services support contract, or are covered under warranty, and need post-sales technical support, you can access our tools and resources online or open a case with JTAC.

- JTAC policies—For a complete understanding of our JTAC procedures and policies, review the *JTAC User Guide* located at https://www.juniper.net/us/en/local/pdf/resource-guides/7100059-en.pdf.
- Product warranties—For product warranty information, visit https://www.juniper.net/support/warranty/.
- JTAC hours of operation—The JTAC centers have resources available 24 hours a day, 7 days a week, 365 days a year.

Copyright © 2019, Juniper Networks, Inc.

Self-Help Online Tools and Resources

For quick and easy problem resolution, Juniper Networks has designed an online self-service portal called the Customer Support Center (CSC) that provides you with the following features:

- Find CSC offerings: https://www.juniper.net/customers/support/
- Search for known bugs: https://prsearch.juniper.net/
- Find product documentation: https://www.juniper.net/documentation/
- Find solutions and answer questions using our Knowledge Base: https://kb.juniper.net/
- Download the latest versions of software and review release notes: https://www.juniper.net/customers/csc/software/
- Search technical bulletins for relevant hardware and software notifications: https://kb.juniper.net/InfoCenter/
- Join and participate in the Juniper Networks Community Forum: https://www.juniper.net/company/communities/
- Create a service request online: https://myjuniper.juniper.net

To verify service entitlement by product serial number, use our Serial Number Entitlement (SNE) Tool: https://entitlementsearch.juniper.net/entitlementsearch/

Creating a Service Request with JTAC

You can create a service request with JTAC on the Web or by telephone.

- Visit https://myjuniper.juniper.net.
- Call 1-888-314-JTAC (1-888-314-5822 toll-free in the USA, Canada, and Mexico).

For international or direct-dial options in countries without toll-free numbers, see https://support.juniper.net/support/requesting-support/.

Copyright © 2019, Juniper Networks, Inc.

PART 1

Overview

- System Overview and Architecture on page 3
- T640 Router Release Notes on page 11
- Chassis Components and Descriptions on page 13
- Cooling System Components and Descriptions on page 31
- Host Subsystem Components and Descriptions on page 35
- Line Card Components and Description on page 73
- Power System Components and Descriptions on page 103
- Switch Fabric Components and Descriptions on page 119

Copyright © 2019, Juniper Networks, Inc.

Copyright © 2019, Juniper Networks, Inc.

CHAPTER 1

System Overview and Architecture

- T640 Router Description on page 3
- T640 Component Redundancy on page 4
- T640 System Architecture Description on page 5
- T640 Routing Engine Functions on page 5
- T640 Packet Forwarding Engine Architecture on page 7
- Data Flow Through the T640 Router on page 7

T640 Router Description

The T640 Core Router is a complete routing system that provides Gigabit Ethernet, SONET/SDH, and other high-speed interfaces for large networks and network applications, such as those supported by Internet service providers (ISPs).

Application-specific integrated circuits (ASICs) are a definitive part of the router design; these ASICs enable the router to achieve data forwarding rates that match current fiber-optic capacity.

The router accommodates up to eight Flexible PIC Concentrators (FPCs), which can each be configured with a variety of network media types—altogether providing up to 128 SONET/SDH OC48/STM16, 32 SONET/SDH OC192/STM64, or 128 Gigabit Ethernet ports for the router. In a standalone configuration, the router's maximum aggregate throughput is 320 Gbps, full duplex.

The router is a modular, rack-mountable system. Two routers can be installed in one standard, 78-in. telco rack.

Related Documentation

- T640 Chassis Description on page 15
- T640 Physical Specifications on page 127
- T640 Environmental Specifications on page 130
- T640 DC Power System Electrical Specifications on page 133

Copyright © 2019, Juniper Networks, Inc.

T640 Component Redundancy

The T640 Core Router is designed so that no single point of failure can cause the entire system to fail. The following major hardware components are redundant:

- Switch Interface Boards (SIBs)—The router has five SIBs. A T640 router that is connected to a TX Matrix platform requires T640-SIBs ; see "T640 Switch Interface Boards (SIBs) Description" on page 119) Each Type 1 FPC and Type 2 FPC has a dedicated ASIC with five high-speed links that connect to the SIBs (one link per SIB). Each Type 3 FPC has two dedicated ASICs, and each ASIC has five high-speed links that connect to the SIBs (a total of 10 links). Each Type 4 FPC has one dedicated ASIC with ten high-speed links that connect to the SIBs (two links per SIB). One of the five SIBs—usually **SIB4**—acts as a backup to the remaining four SIBs. If a SIB fails, the backup SIB becomes active and traffic forwarding continues without any degradation. When the failed SIB is replaced, it becomes the new backup.
- Host subsystem—The host subsystem consists of a Routing Engine functioning together with a control board. The router can have one or two host subsystems. If two host subsystems are installed, one functions as the master and the other functions as the backup. If the master host subsystem (or either of its components) fails, the backup can take over as the master. To operate, each host subsystem requires a Routing Engine installed in an adjacent slot to a control board.

  If the Routing Engines are configured for *graceful switchover*, the backup Routing Engine automatically synchronizes its configuration and state with the master Routing Engine. Any update to the master Routing Engine state is replicated on the backup Routing Engine. If the backup Routing Engine assumes mastership, packet forwarding continues through the router without interruption. For more information about graceful switchover, see the *Junos OS Administration Library*.
- SONET Clock Generators (SCGs)—The router has a standard configuration of one SCG. A second can be purchased to function as backup. If one SCG fails, the other becomes the master SCG. Mastership of the SCGs is independent of the host subsystem, so routing functions are not affected.
- Power supplies—The router has two power supplies, which share the load evenly. If one power supply fails, the other power supply can provide full power to the router indefinitely.
- Cooling system—The cooling system has redundant components, which are controlled by the host subsystem. If one of the fans fails, the host subsystem increases the speed of the remaining fans to provide sufficient cooling for the router indefinitely.

Related Documentation

- T640 Router Description on page 3
- Reinstalling Components in the T640 Chassis on page 202
- T640 System Architecture Description on page 5

Copyright © 2019, Juniper Networks, Inc.

T640 System Architecture Description

The router architecture cleanly separates control operations from packet forwarding operations. This design eliminates processing and traffic bottlenecks, permitting the router to achieve high performance. Control operations in the router are performed by the host subsystem, which runs Junos OS to handle routing protocols, traffic engineering, policy, policing, monitoring, and configuration management. Forwarding operations in the router are performed by the Packet Forwarding Engines, which consist of hardware, including ASICs, designed by Juniper Networks.

The T640 Core Router has two main architectural components:

- Routing Engine—This component provides Layer 3 routing services and network management.
- Packet Forwarding Engines—These high-performance, ASIC-based components provide Layer 2 and Layer 3 packet switching, route lookups, and packet forwarding.

The Routing Engine and the Packet Forwarding Engines perform their primary tasks independently, although they constantly communicate through multiple 100-Mbps links. This arrangement streamlines forwarding and routing control and runs Internet-scale backbone networks at high speeds. Figure 1 on page 5 shows the relationship between the Routing Engine and the Packet Forwarding Engines.

Figure 1: Router Architecture

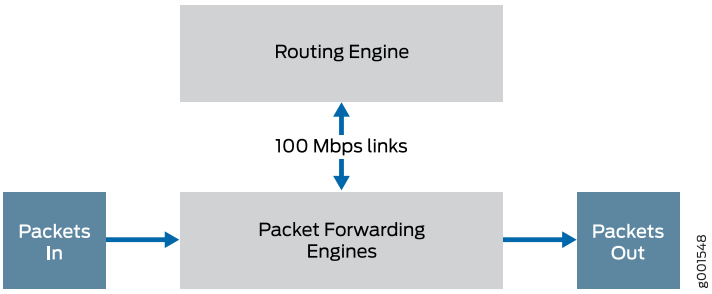

Related Documentation

- T640 Chassis Description on page 15

T640 Routing Engine Functions

The Routing Engine handles all routing protocol processes, as well as the software processes that control the router's interfaces, the chassis components, system management, and user access to the router. These routing and software processes run on top of a kernel that interacts with the Packet Forwarding Engine.

The Routing Engine includes the functions and features:

Copyright © 2019, Juniper Networks, Inc.

- Processing of routing protocol packets—The Routing Engine handles all packets that concern routing protocols, freeing the Packet Forwarding Engine to handle only packets that represent Internet traffic.
- Software modularity—Because each software process is devoted to a different function and uses a separate process space, the failure of one process has little or no effect on the others.
- In-depth Internet functionality—Each routing protocol is implemented with a complete set of Internet features and provides full flexibility for advertising, filtering, and modifying routes. Routing policies are set according to route parameters (for example, prefix, prefix lengths, and BGP attributes).
- Scalability—The Junos routing tables have been designed to hold all the routes in current networks with ample capacity for expansion. Additionally, the Junos OS can efficiently support large numbers of interfaces and virtual circuits.
- Management interface—Different levels of system management tools are provided, including the Junos OS command-line interface (CLI), the Junos XML management protocol, the craft interface, and SNMP.
- Storage and change management—Configuration files, system images, and microcode can be held and maintained in primary and secondary storage systems, permitting local or remote upgrades.
- Monitoring efficiency and flexibility—The router supports functions such as alarm handling and packet counting on every port, without degrading packet-forwarding performance.

The Routing Engine constructs and maintains one or more routing tables (see Figure 2 on page 6). From the routing tables, the Routing Engine derives a table of active routes, called the forwarding table, which is then copied into the Packet Forwarding Engine. The design of the ASICs allow the forwarding table in the Packet Forwarding Engine to be updated without interrupting forwarding performance.

Figure 2: Control Packet Handling for Routing and Forwarding Table Updates

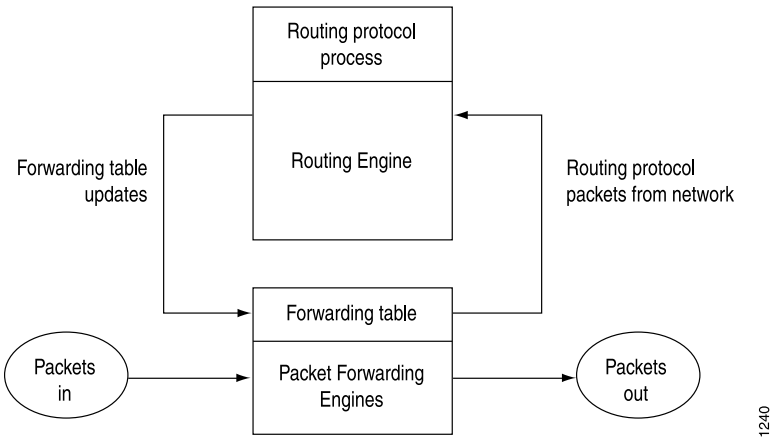

Related Documentation

- Replacing a T640 Routing Engine on page 329

Copyright © 2019, Juniper Networks, Inc.

- T640 Routing Engine Description on page 36
- Maintaining the T640 Routing Engines on page 468

T640 Packet Forwarding Engine Architecture

The Packet Forwarding Engines provide the Layer 2 and Layer 3 packet switching, forwarding, and route lookup functions. In a maximum configuration with eight Type 3 FPCs installed, the Packet Forwarding Engines can forward up to 640 million packets per second (Mpps) for all packet sizes. The maximum aggregate throughput rate for the T640 router is 320 Gbps (full duplex). The Packet Forwarding Engines are implemented in ASICs that are physically located on the FPCs and the PICs.

Each Packet Forwarding Engine consists of the following components (see Figure 3 on page 8):

- Layer 2/Layer 3 Packet Processing ASIC, which performs Layer 2 and Layer 3 encapsulation and de-encapsulation, and manages the division and reassembly of packets within the T640 router.
- Queuing and Memory Interface ASICs, which manage the buffering of data cells in memory and the queueing of notifications.
- T-series Internet Processor, which provides the route lookup function.
- Switch Interface ASICs, which extract the route lookup key and manage the flow of data cells across the switch fabric.
- Media-specific ASICs on the PICs that perform control functions tailored to the PIC media types.

Related Documentation

- T640 Chassis Description on page 15
- T640 Physical Specifications on page 127
- *Replacing T640 Packet Forwarding Engine Components*

Data Flow Through the T640 Router

To ensure the efficient movement of data through the T640 Core Router, the router is designed so that ASICs on the hardware components handle the forwarding of data. Data flows through the T640 router in the following sequence (see Figure 3 on page 8):

Figure 3: Data Flow Through the T640 Router

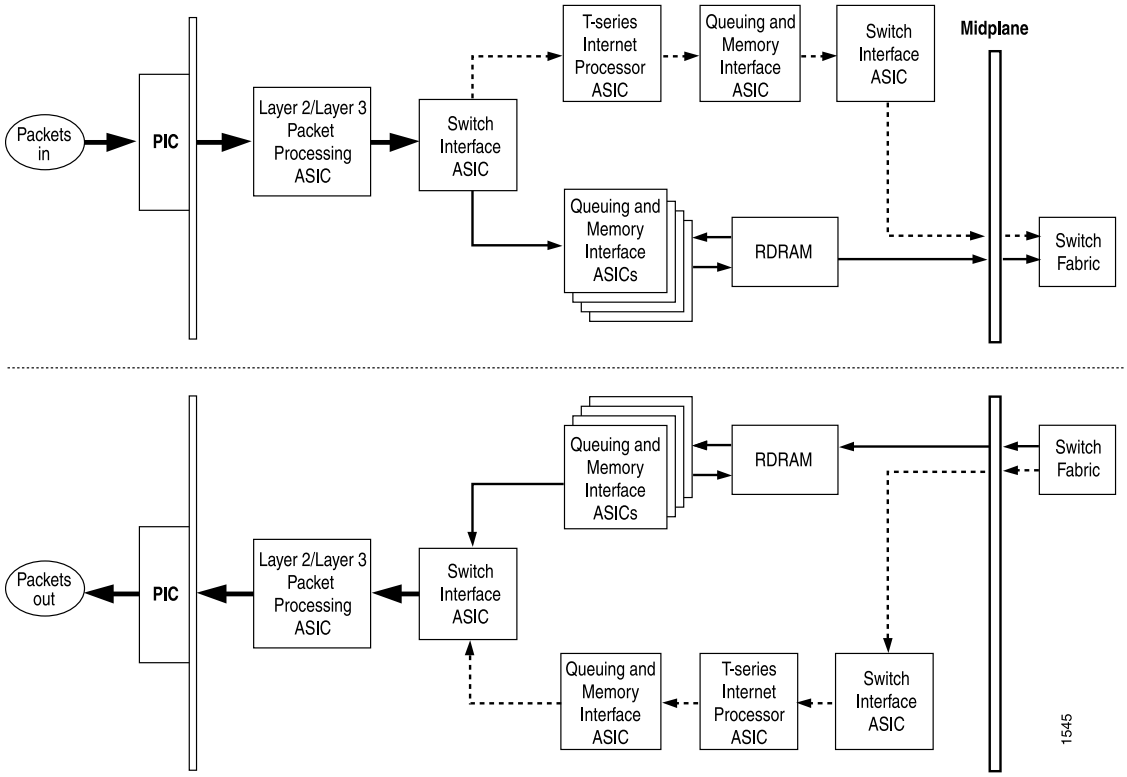

1. Packets arrive at an incoming PIC interface.

2. The PIC passes the packets to the FPC, where the Layer 2/Layer 3 Packet Processing ASIC performs Layer 2 and Layer 3 parsing and divides the packets into 64-byte cells.

3. The Switch Interface ASIC extracts the route lookup key, places it in a notification and passes the notification to the T-series Internet Processor. The Switch Interface ASIC also passes the data cells to the Queuing and Memory Interface ASICs for buffering.

4. The Queuing and Memory Interface ASICs pass the data cells to memory for buffering.

5. The T-series Internet Processor performs the route lookup and forwards the notification to the Queuing and Memory Interface ASIC.

6. The Queuing and Memory Interface ASIC sends the notification to the Switch Interface ASIC facing the switch fabric, unless the destination is on the same Packet Forwarding Engine. In this case, the notification is sent back to the Switch Interface ASIC facing the outgoing ports, and the packets are sent to the outgoing port without passing through the switch fabric (see Step 13).

Copyright © 2019, Juniper Networks, Inc.

7. The Switch Interface ASIC sends bandwidth requests through the switch fabric to the destination port. The Switch Interface ASIC also issues read requests to the Queuing and Memory Interface ASIC to begin reading data cells out of memory.

8. The destination Switch Interface ASIC sends bandwidth grants through the switch fabric to the originating Switch Interface ASIC.

9. On receipt of each bandwidth grant, the originating Switch Interface ASIC sends a cell through the switch fabric to the destination Packet Forwarding Engine.

10. The destination Switch Interface ASIC receives cells from the switch fabric. It extracts the route lookup key from each cell, places it in a notification, and forwards the notification to the T-series Internet Processor.

11. The T-series Internet Processor performs the route lookup, and forwards the notification to the Queuing and Memory Interface ASIC.

12. The Queuing and Memory Interface ASIC forwards the notification, including next-hop information, to the Switch Interface ASIC.

13. The Switch Interface ASIC sends read requests to the Queuing and Memory Interface ASIC to read the data cells out of memory, and passes the cells to the Layer 2/Layer 3 Packet Processing ASIC.

14. The Layer 2/Layer 3 Packet Processing ASIC reassembles the data cells into packets, adds Layer 2 encapsulation, and sends the packets to the outgoing PIC interface.

15. The outgoing PIC sends the packets out into the network.

Related Documentation

- T640 Chassis Description on page 15
- T640 Physical Specifications on page 127
- *Replacing T640 Packet Forwarding Engine Components*

Copyright © 2019, Juniper Networks, Inc.

Copyright © 2019, Juniper Networks, Inc.

CHAPTER 2

T640 Router Release Notes

- Outstanding Issues with the T640 Router on page 11
- Errata with the T640 Router Documentation on page 12

Outstanding Issues with the T640 Router

This topic lists the outstanding issues with the T640 Core Router.

- When the C1800-RE Routing Engine is installed, the LEDs for the **ETHERNET** ports on the connector interface panel (CIP) have the following issues:
  - Model number RE-DUO-C1800-8G (part number 740-026941 Rev 7)—The activity LED, labeled **ACT0** or **ACT1**, for the **ETHERNET** ports on the connector interface panel (CIP) are always steadily green, even when no cables are connected to the ports.

    For model number RE-DUO-C1800-8G (part number 740-026941 Rev 8) and above, the CIP LED behavior is as described in the *T640 Core Router Hardware Guide*.
  - Model numbers RE-DUO-C1800-8G and RE-DUO-C1800-16G—The LED labeled **GRN =100M YEL=10M** is always yellow, but the speed is always a 100-Mbps connection.
- After powering on or off a power supply, wait at least 60 seconds before turning it back off or on again.
- After a power supply is powered on, it can take up to 60 seconds for status indicators—such as LEDs on the power supply, show chassis commands, and messages on the craft interface LCD —to indicate that the power supply is functioning normally. Ignore error indicators that appear during the first 60 seconds.
- The external clock inputs on the SONET Clock Generators (SCGs) with DB-9 ports (model number **SCG-T**) are not supported.
- The external clock inputs on the SONET Clock Generators (SCGs) with RJ-45 ports (model number **SCG-T-EC**) are supported for JUNOS OS Release 10.4 and later.

For complete information about the router, see the *T640 Core Router Hardware Guide*. For information about software issues, see the *Junos OS Release Notes*.

Related Documentation

- Errata with the T640 Router Documentation on page 12

Errata with the T640 Router Documentation

There are no outstanding issues with the T640 router documentation.

Related Documentation

- Outstanding Issues with the T640 Router on page 11

Copyright © 2019, Juniper Networks, Inc.

CHAPTER 3

Chassis Components and Descriptions

- T640 Hardware Component Overview on page 13
- T640 Chassis Description on page 15
- T640 Midplane Description on page 17
- T640 Cable Management System Description on page 19
- T640 Connector Interface Panel (CIP) Description on page 19
- T640 Connector Interface Panel (CIP) LEDs on page 22
- T640 Craft Interface Description on page 22
- T640 Craft Interface Alarm LEDs and ACO/LT Button on page 23
- T640 Craft Interface FPC LEDs and Online/Offline Buttons on page 24
- T640 Craft Interface Host Subsystem LEDs on page 24
- T640 Craft Interface LCD and Navigation Buttons on page 25
- T640 Craft Interface SIB LEDs on page 26
- T640 SONET Clock Generators (SCGs) Description on page 27
- T640 SONET Clock Generators (SCGs) LEDs on page 28

T640 Hardware Component Overview

The T640 Core Router supports the components in Table 3 on page 13, listed in alphabetic order.

Table 3: T640 Hardware Components

Component	Hardware Model Number	Description
Cable management system	N/A	"T640 Cable Management System Description" on page 19
Chassis	N/A	"T640 Chassis Description" on page 15

Copyright © 2019, Juniper Networks, Inc.

Table 3: T640 Hardware Components (continued)

Component	Hardware Model Number	Description
Cooling system, including fan trays and air filters	FAN-REAR-TX-T640 FAN-REAR-TXP-LCC FAN-T-FBOT FAN-T-FTOP FLTR-KIT-T640	"T640 Cooling System Description" on page 31
Connector interface panel (CIP)	CIP-L-T640	"T640 Craft Interface Description" on page 22
Control board	CB-L-T CB-T CB-LCC	*T640 Control Boards Description* "T640 Standard Control Boards Description" on page 69 "T640 T Series Control Boards (T-CBs) Description" on page 70 "T640 LCC-CB Description" on page 67
Craft interface	CRAFT-T640	"T640 Craft Interface Description" on page 22
FPC	"T640 FPCs Supported" on page 83	"T640 FPC Description" on page 73
Host subsystem, including control board and Routing Engine	See control board and Routing Engine.	"T640 Host Subsystem Description" on page 35
Midplane	N/A	"T640 Midplane Description" on page 17
PIC	*T640 Core Router Interface Module Reference*	"T640 PIC Description" on page 85
Power system	PWR-T-10KW-DELTA-AC PWR-T-10KW-WYE-AC PWR-T-DC PWR-T1600-3-80-DC PWR-T1600-4-60-DC PWR-T-6-60-DC	"T640 Power System Description" on page 103 "T640 Two-Input 160-A DC Power Supply Description" on page 104 "T640 Three-Input 240-A DC Power Supply Description" on page 107 "T640 Four-Input 240-A DC Power Supply Description" on page 110 "T640 Six-Input DC Power Supply Description" on page 112 "T640 Three-Phase Delta and Wye AC Power Supply Description" on page 114

Copyright © 2019, Juniper Networks, Inc.

Table 3: T640 Hardware Components (continued)

Component	Hardware Model Number	Description
Routing Engine	RE-600-2048 RE-1600-2048 RE-A-2000-4096 RE-DUO-C1800-8G RE-DUO-C1800-16G	"T640 Routing Engine Description" on page 36 "T640 RE-600 Description" on page 37 "T640 RE-1600 Description" on page 39 "T640 RE-2000 Description" on page 44 "T640 RE-C1800 Description" on page 42
SONET Clock Generator (SCG)	SCG-T-EC SCG-T	"T640 SONET Clock Generators (SCGs) Description" on page 27
Switch Interface Board (SIB)	SIB-TXP-T1600 SIB-T1600	"T640 Switch Interface Boards (SIBs) Description" on page 119 "T640 LCC-CB Description" on page 67 "T640 T Series Control Boards (T-CBs) Description" on page 70

Related Documentation

- T640 Router Description on page 3
- T640 Field-Replaceable Units on page 269

T640 Chassis Description

The T640 Core Router chassis is a rigid sheet metal structure that houses all the other router components (see Figure 4 on page 16 and Figure 5 on page 17). The chassis measures 37.45 in. (95.1 cm) high, 31 in. (78.7 cm) deep, and 17.43 in. (44.3 cm) wide. For physical specifications, see "T640 Physical Specifications" on page 127. The chassis can be installed into many types of racks or cabinets. For more information. see "T640 Rack Requirements" on page 128.

The chassis includes the following features (see Figure 4 on page 16 and Figure 5 on page 17):

- One pair of metal flanges for front-mounting or mounting in a four-post rack or cabinet.
- One pair of metal brackets for center-mounting.
- Installation handles on each side to facilitate positioning the router in the rack. Do not use the handles to lift the router.
- Two electrostatic discharge (ESD) points (banana plug receptacles), one front and one rear.

Copyright © 2019, Juniper Networks, Inc.

CAUTION: Before removing or installing components of a router, attach an ESD strap to an ESD point and place the other end of the strap around your bare wrist. Failure to use an ESD strap could result in damage to the router.

WARNING: The router must be connected to earth ground during normal operation.

Figure 4: Front View of T640 Chassis

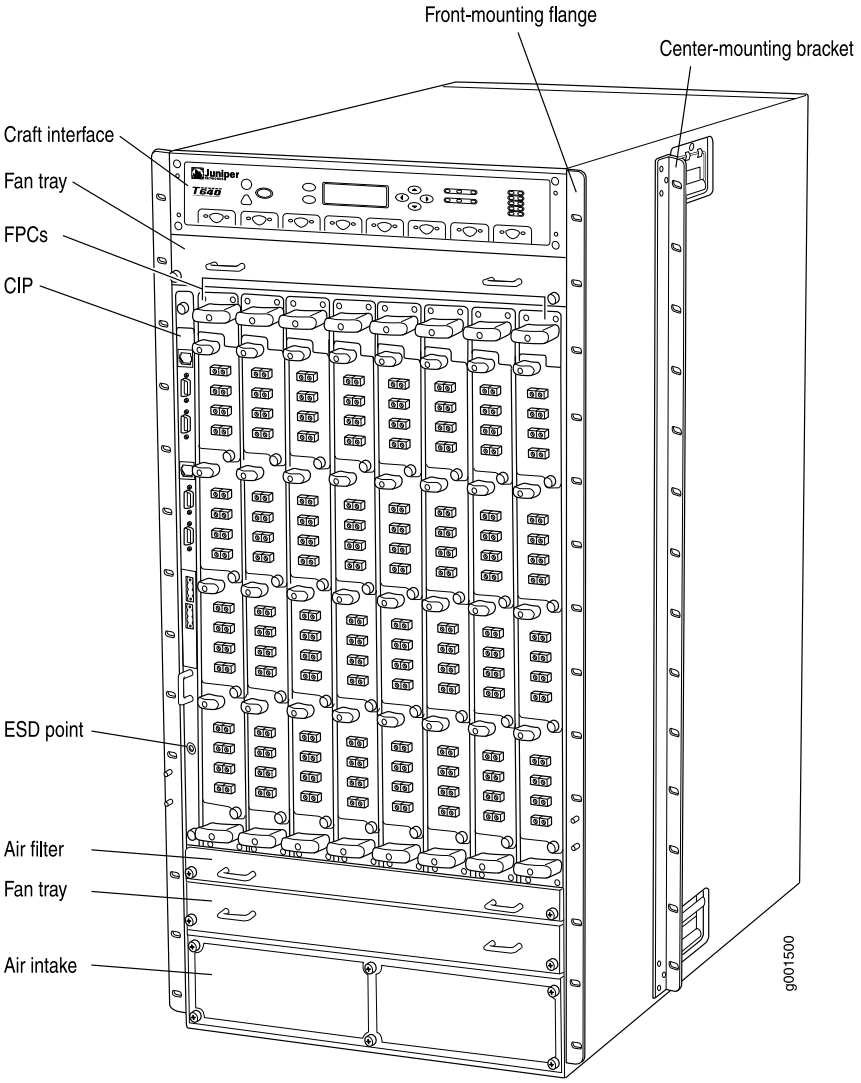

Copyright © 2019, Juniper Networks, Inc.

Figure 5: Rear View of T640 Chassis

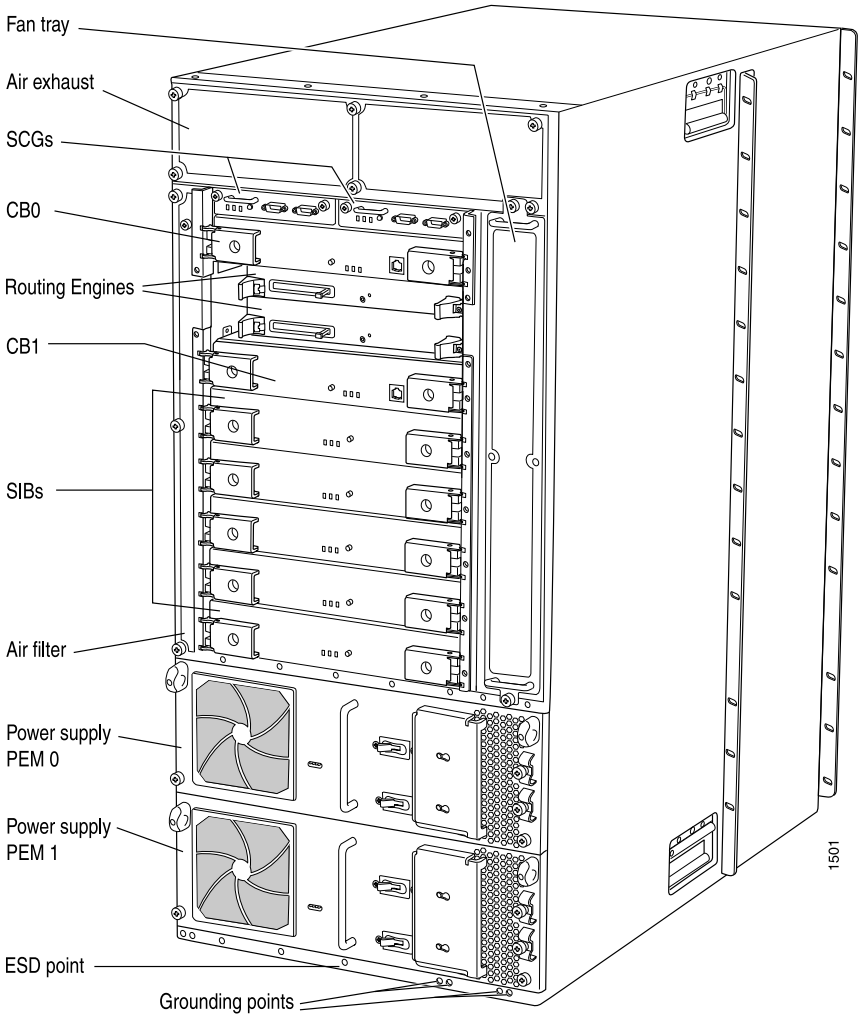

For chassis serial number information , see "Locating T640 Component Serial Numbers Using the CLI" on page 507.

Related Documentation

- T640 Hardware Component Overview on page 13
- T640 Physical Specifications on page 127
- T640 Chassis Grounding Cable and Lug Specifications on page 126
- T640 Installation Safety Guidelines on page 533

T640 Midplane Description

The T640 Core Router midplane is located in the center of the chassis and forms the rear of the FPC card cage (see Figure 6 on page 18). The FPCs install into the midplane from the front of the chassis, and the SIBs, Routing Engines, control boards, and SCGs

install into the midplane from the rear of the chassis. The power supplies and cooling system components also connect to the midplane.

The midplane performs the following major functions:

- Data path—Data packets are transferred across the midplane from the Packet Forwarding Engine on the originating FPC to the SIBs, and from the SIBs across the midplane to the Packet Forwarding Engine on the destination FPC.
- Power distribution—The router power supplies are connected to the midplane, which distributes power to all the router components.
- Signal path—The midplane provides the signal path to the FPCs, SIBs, Routing Engines, and control boards, and other system components for monitoring and control of the system.

Figure 6: T640 Midplane

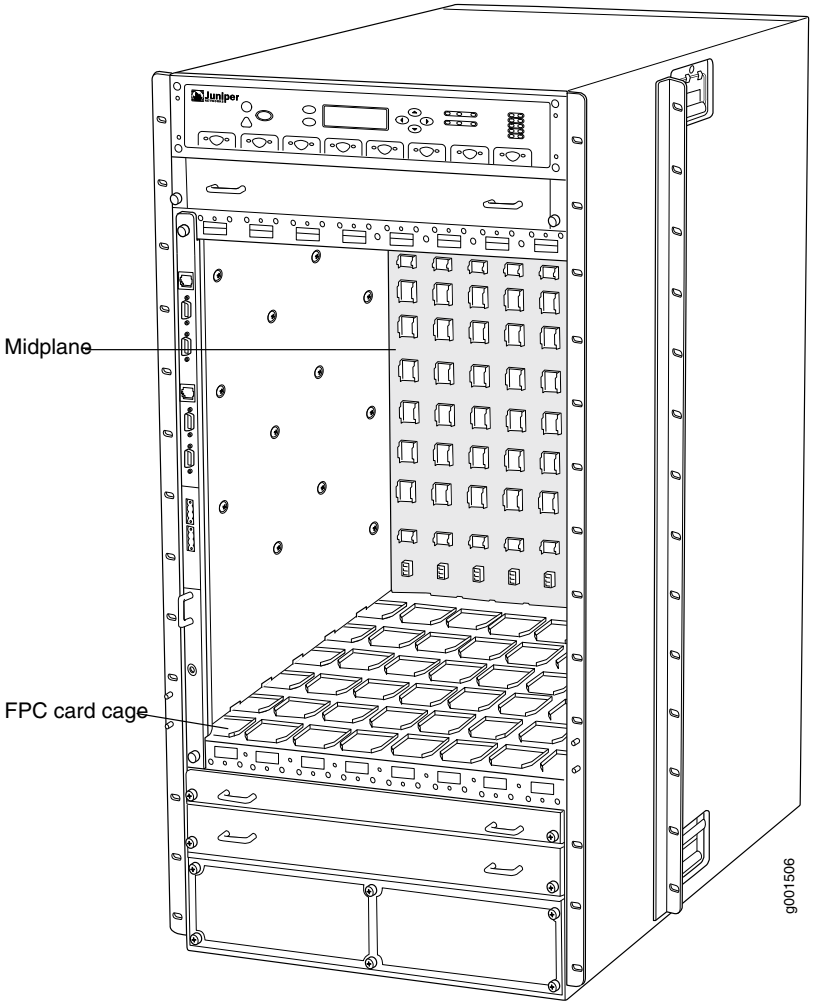

For chassis serial number information , see "Locating T640 Component Serial Numbers Using the CLI" on page 507.

Copyright © 2019, Juniper Networks, Inc.

Related Documentation

- T640 Hardware Component Overview on page 13
- T640 Router Description on page 3
- T640 Physical Specifications on page 127

T640 Cable Management System Description

The cable management system (see Figure 7 on page 19) consists of a row of nine semicircular plastic bobbins mounted on the front of the router below the FPC card cage. The PIC cables pass between the bobbins and into the tray, keeping the cables organized and securely in place. The curvature of the bobbins also helps maintain the proper bend radius for optical PIC cables.

You can pull the cable management system up and outward to lock it into the maintenance position. This allows you to access the lower fan tray and the front air filter.

Figure 7: Cable Management System

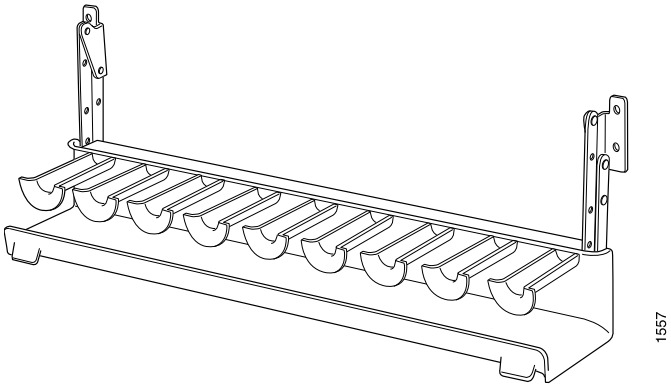

Related Documentation

- T640 Hardware Component Overview on page 13
- T640 Router Description on page 3
- T640 Chassis Description on page 15

T640 Connector Interface Panel (CIP) Description

- CIP Components on page 19
- Management Ports on page 20
- Alarm Relay Contacts on page 21

CIP Components

The Connector Interface Panel (CIP) consists of Ethernet, console, and auxiliary connectors for the Routing Engines and alarm relay contacts (see Figure 8 on page 20).

Figure 8: CIP

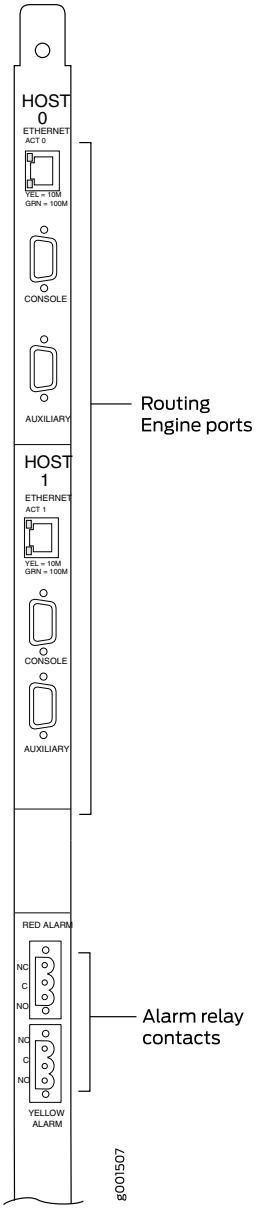

The front electrostatic discharge point is located near the bottom of the CIP. The CIP is located at the left side of the FPC card cage.

The CIP is hot-pluggable.

Management Ports

The CIP has two sets of ports that you use to connect the Routing Engines to external management devices. From these management devices, you can use the CLI to configure the router.

Copyright © 2019, Juniper Networks, Inc.

The upper set of ports, labeled **HOST 0**, connects to the Routing Engine in slot **RE0**; and the lower set, labeled **HOST 1**, connects to the Routing Engine in slot **RE1**. Each set includes the following ports:

- **ETHERNET**—Connects the Routing Engine through an Ethernet connection to a management LAN (or any other device that plugs into an Ethernet connection) for out-of-band management. The port uses an autosensing RJ-45 connector to support both 10- and 100-Mbps connections.
  - One small LED on the upper left edge of the **ETHERNET** port, labeled **ACT**, indicates whether traffic is passing through the port.
  - One small LED on the lower left edge of the **ETHERNET** port indicates the connection in use: the yellow LED lights for a 10-Mbps connection, and the green LED lights for a 100-Mbps connection.

  NOTE: **When an RE-C1800 is installed, the connection LED is always yellow for both a 10-Mbps connection and 100-Mbps connection.**

- **CONSOLE**—Connects the Routing Engine to a system console through an RS-232 (EIA-232) serial cable.
- **AUXILIARY**— Connects the Routing Engine to a laptop, modem, or other auxiliary device through an RS-232 (EIA-232) serial cable.

Alarm Relay Contacts

The CIP has two alarm relay contacts for connecting the router to external alarm devices. Whenever a system condition triggers either the red or yellow alarm on the craft interface, the alarm relay contacts are also activated. The alarm relay contacts are located below the Routing Engine ports. The terminal blocks that plug into the alarm relay contacts are supplied with the router. They accept wire of any gauge between 28-AWG and 14-AWG (0.08 and 2.08 mm^2), which is not provided. Use the gauge of wire appropriate for the external device you are connecting.

Related Documentation

- T640 Hardware Component Overview on page 13
- Replacing the T640 CIP on page 275
- T640 Component Serial Number Label Locations on page 508
- T640 Routing Engine Interface Cable and Wire Specifications on page 153
- T640 RJ-45 Connector Pinouts for the Routing Engine ETHERNET Port on page 154
- T640 DB-9 Connector Pinouts for the Routing Engine AUXILIARY and CONSOLE Ports on page 154

T640 Connector Interface Panel (CIP) LEDs

Two small LEDs on the left edge of the **ETHERNET** port indicate activity and the speed of the connection in use. Table 4 on page 22 describes the functions of the LEDs.

NOTE: For routers with RE-C1800 Routing Engines, see the release notes for your router regarding more information about the LED behavior for the ETHERNET port.

Table 4: CIP LEDs

LED	Color	State	Description
ACT 0 and **ACT 1**	Green	On steadliy	Traffic is passing through the port.
	--	Off	No traffic is passing through the port.
GRN = 100M **YEL= 10M**	Green	On steadily	100-Mbps connection
	Yellow	On steadily	10-Mbps connection NOTE: When RE-C1800 Routing Engines are installed, the yellow LED indicates a 100-Mbps connection.
	--	Off	Control board is offline.

Related Documentation

- Outstanding Issues with the T640 Router on page 11
- T640 Connector Interface Panel (CIP) Description on page 19
- T640 RE-C1800 Description on page 42
- Connecting the T640 Router to a Network for Out-of-Band Management on page 221
- T640 LED Overview on page 486

T640 Craft Interface Description

The craft interface allows you to view status and troubleshooting information at a glance and to perform many system control functions. It is hot-insertable and hot-removable. The craft interface is located on the front of the router above the FPCs and contains the following:

Copyright © 2019, Juniper Networks, Inc.

Figure 9: Front Panel of the T640 Craft Interface

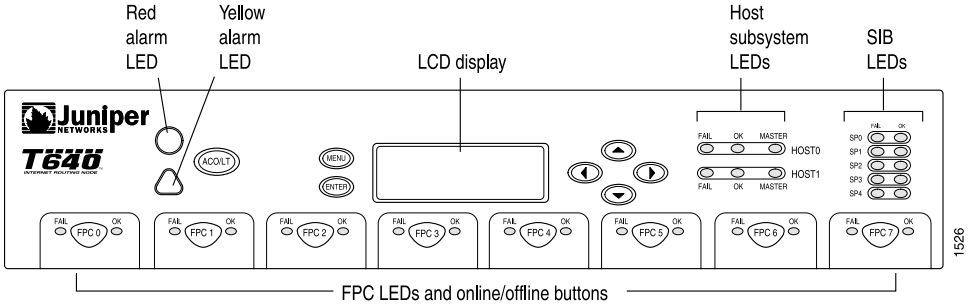

Related Documentation

- T640 Chassis Description on page 15
- T640 Hardware Component Overview on page 13
- Replacing a T640 Craft Interface on page 273

T640 Craft Interface Alarm LEDs and ACO/LT Button

Two large alarm LEDs are located at the upper left of the craft interface (see Figure 9 on page 23). The circular red LED lights to indicate a critical condition that can result in a system shutdown. The triangular yellow LED lights to indicate a less severe condition that requires monitoring or maintenance. Both LEDs can be lit simultaneously.

A condition that causes an LED to light also activates the corresponding alarm relay contact on the connector interface panel (CIP), as described in "T640 Connector Interface Panel (CIP) Description" on page 19. The LCD on the craft interface reports the cause of the alarm, as described in "T640 Craft Interface LCD and Navigation Buttons" on page 25.

To deactivate red and yellow alarms, press the button labeled **ACO/LT** (for "alarm cutoff/lamp test"), which is located to the right of the alarm LEDs. Deactivating an alarm turns off both LEDs and deactivates the device attached to the corresponding alarm relay contact on the CIP. However, the LCD continues to report the alarm message until you clear the condition that caused the alarm.

Table 5 on page 24 describes the alarm LEDs and alarm cutoff button in more detail.

Table 5: Alarm LEDs and Alarm Cutoff/Lamp Test Button

Shape	Color	State	Description
	Red	On steadily	Critical alarm LED—Indicates a critical condition that can cause the router to stop functioning. Possible causes include component removal, failure, or overheating.
	Yellow	On steadily	Warning alarm LED—Indicates a serious but nonfatal error condition, such as a maintenance alert or a significant increase in component temperature.
ACO/LT	—	—	Alarm cutoff/lamp test button—Deactivates red and yellow alarms. Causes all LEDs on the craft interface to light (for testing purposes), when pressed and held.

Related Documentation

- T640 Chassis Description on page 15
- T640 LED Overview on page 486
- Replacing a T640 Craft Interface on page 273

T640 Craft Interface FPC LEDs and Online/Offline Buttons

Each FPC slot has two LEDs that indicate its status. The FPC LEDs, labeled **FPC0** through **FPC7**, are located along the bottom of the craft interface. Table 6 on page 24 describes the functions of the FPC LEDs.

Table 6: FPC LEDs

Label	Color	State	Description
FAIL	Red	On steadily	FPC has failed.
OK	Green	On steadily	FPC is functioning normally.
		Blinking	FPC is starting up.

Related Documentation

- T640 Chassis Description on page 15
- T640 LED Overview on page 486
- Replacing a T640 Craft Interface on page 273

T640 Craft Interface Host Subsystem LEDs

Each host subsystem has three LEDs, located on the upper right of the craft interface, that indicate its status. The LEDs labeled **HOST0** show the status of the Routing Engine in slot **RE0** and the control board in slot **CB0**. The LEDs labeled **HOST1** show the status

Copyright © 2019, Juniper Networks, Inc.

of the Routing Engine in slot **RE1** and the control board in slot **CB1**. Table 7 on page 25 describes the functions of the host subsystem LEDs.

Table 7: T640 Host Subsystem LEDs

Label	Color	State	Description
FAIL	Red	On steadily	Host is offline.
OK	Green	On steadily	Host is online and is functioning normally.
MASTER	Green	On steadily	Host is functioning as the master.

Related Documentation

- T640 Chassis Description on page 15
- T640 LED Overview on page 486
- Replacing a T640 Craft Interface on page 273

T640 Craft Interface LCD and Navigation Buttons

A four-line LCD is located in the craft interface, along with six navigation buttons. The LCD operates in two modes:

- LED Idle Mode
- LED Alarm Mode

During normal operation, the LCD operates in idle mode and reports current status information, as shown in Figure 10 on page 25.

Figure 10: T640 LCD in Idle Mode

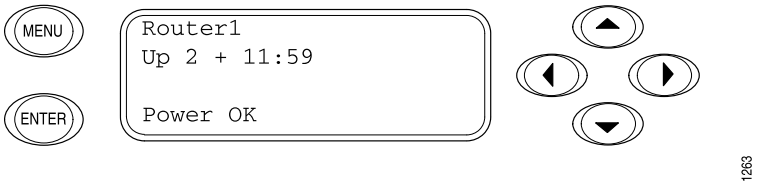

The lines in the display report the following information:

- First line—Router name.
- Second line—Length of time the router has been running, reported in the following form:

  Up *days* + *hours*:*minutes*

- Third and fourth lines—Status messages, which rotate at 2-second intervals. Some conditions, such as removal or insertion of a system component, can interrupt the messages.

Copyright © 2019, Juniper Networks, Inc.

To add a message that alternates every 2 seconds with the default status messages, use the **set chassis display message** command. For more information, see *set chassis display message*.

When a red or yellow alarm occurs, the LCD switches to alarm mode and reports the alarm condition, as shown in Figure 11 on page 26.

Figure 11: T640 LCD in Alarm Mode

The lines in the display report the following information:

- First line—Router name.
- Second line—Number of active alarms.
- Third and fourth lines—Individual alarm messages, with the most severe condition shown first. The prefix on each line indicates whether the alarm is a red (**R**) or yellow (**Y**) alarm.

For an overview of alarm messages that can appear on the LCD, see "T640 Alarm Messages Overview" on page 488.

Related Documentation

- T640 Chassis Description on page 15
- T640 LED Overview on page 486
- Replacing a T640 Craft Interface on page 273

T640 Craft Interface SIB LEDs

Each SIB has two LEDs on the craft interface that indicate its status. The SIB LEDs, labeled **SIB0** through **SIB2**, are located on the upper right of the craft interface. The **ACTIVE** LED on the SIB faceplate is not replicated on the craft interface. Table 8 on page 26 describes the functions of the SIB LEDs.

Table 8: SIB LEDs on the Craft Interface

Label	Color	State	Description
FAIL	Red	On steadily	SIB has failed.
OK	Green	On steadily	SIB is functioning normally.

Related Documentation

- T640 Chassis Description on page 15
- T640 LED Overview on page 486

Copyright © 2019, Juniper Networks, Inc.

- Replacing a T640 Craft Interface on page 273

T640 SONET Clock Generators (SCGs) Description

The SONET Clock Generators (SCGs) provide 19.44-MHz Stratum 3 clock signal for the SONET/SDH interfaces on the router. One SCG is shipped as part of the standard router configuration, but up to two SCGs can be installed to provide redundancy. SCGs are installed into the upper rear of the chassis in the slots labeled **SCG0** and **SCG1**.

Backup SCGs are hot-removable and hot-insertable. Master and nonredundant SCGs are hot-pluggable.

The router supports the SCGs in Table 9 on page 27.

NOTE: **Redundant SCGs must be the same model number, except during upgrade.**

Table 9: Supported Power Supplies

Name	Model Number	First Supported Junos OS Release
SCG with DB-9 ports (Figure 12 on page 27)	SCG-T	5.3
SCG with RJ-48 ports (Figure 13 on page 28)	SCG-T-EC	10.4

Figure 12: SCG with DB-9 Ports

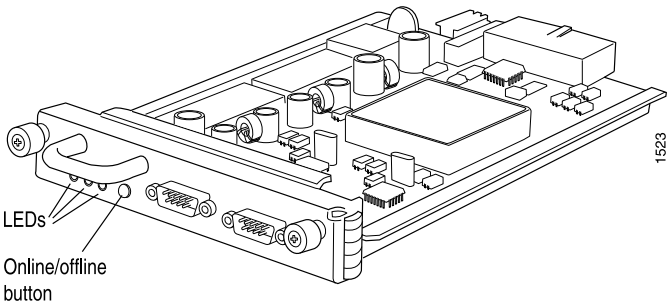

Figure 13: SCG with RJ-48 ports

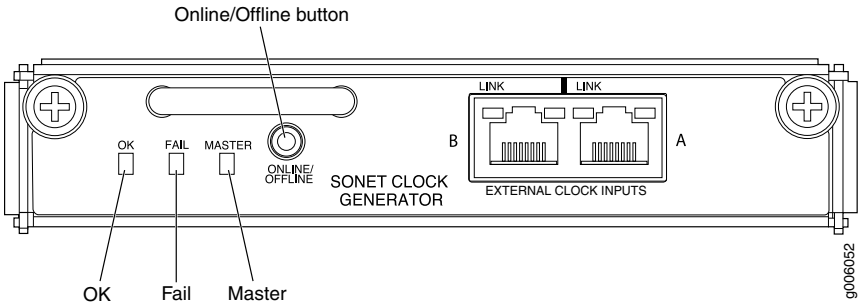

Each SCG consists of the following components:

- 19.44-MHz Stratum 3 clock.
- Field-programmable gate array (FPGA) that performs multiplexing of clock sources.

These components are located on the SCG faceplate:

- Three LEDs—**OK**, **FAIL**, and **MASTER**, that display the status of the SCG.
- SCG online/offline button.
- Two external clock inputs.

NOTE: Junos OS Release 10.4 and later supports the external clock inputs on the SCG with RJ-48 ports. The external clock inputs are not supported on the SONET Clock Generator (SCG) with DB-9 ports.

For information about configuring external clock synchronization for T Series routers, see *Junos OS Administration Library*

- Two LEDs for each RJ-48 external clock input that display the status of the links.

Related Documentation

- T640 Hardware Component Overview on page 13
- T640 SONET Clock Generators (SCGs) LEDs on page 28
- Replacing a T640 SCG on page 285
- Maintaining the T640 SCGs on page 463
- *T640 RJ-48 Connector Pinouts for the SCG EXTERNAL CLOCK INPUTS Ports*
- T640 Component Serial Number Label Locations on page 508

T640 SONET Clock Generators (SCGs) LEDs

Three LEDs, located on the SCG faceplate, display the status of the SCG. Table 10 on page 29 describes the functions of the SCG LEDs. Two **LINK** LEDs, located

Copyright © 2019, Juniper Networks, Inc.

on the left of each RJ-48 port, display the status of the external clock inputs links. The other LEDs on the right of each port are not used.

NOTE: The external clock inputs on the SCG with DB-9 ports are not functional.

Figure 14 on page 29 shows the LEDs on the SCG with RJ-48 ports.

Figure 14: SCG with RJ-48 ports

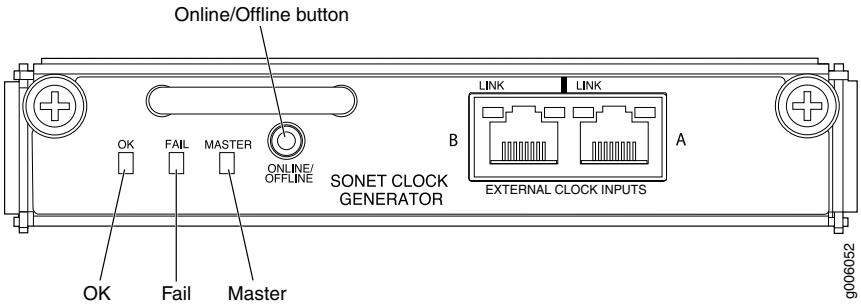

Table 10 on page 29 describes the functions of the SCG LEDs. The **LINK** LED is not applicable to the SCG with DB-9 ports.

Table 10: SCG LEDs

Label	Color	State	Description
OK	Green	On steadily	SCG is online and is functioning normally.
		Off	SCG is not online or not functioning normally.
FAIL	Yellow	On steadily	SCG has failed.
		Off	SCG is offline or functioning normally.
MASTER	Blue	On steadily	SCG is functioning as master.
		Off	SCG is not functioning as the master.
LINK	Green	On Steadily	Link is online and active.
		Off	No link.

Related Documentation

- T640 SONET Clock Generators (SCGs) Description on page 27
- Replacing a T640 SCG on page 285

Copyright © 2019, Juniper Networks, Inc.

- Maintaining the T640 SCGs on page 463
- T640 LED Overview on page 486
- Troubleshooting the T640 SONET Clock Generators on page 490
- T640 Component Serial Number Label Locations on page 508

Copyright © 2019, Juniper Networks, Inc.

CHAPTER 4

Cooling System Components and Descriptions

- T640 Cooling System Description on page 31

T640 Cooling System Description

The cooling system components work together to keep all router components within the acceptable temperature range. The host subsystem monitors the temperature of the router components. When the router is operating normally, the fans function at lower than full speed. If a fan fails or the ambient temperature rises above a threshold, the speed of the remaining fans is automatically adjusted to keep the temperature within the acceptable range. If the ambient maximum temperature specification is exceeded and the system cannot be adequately cooled, the Routing Engine shuts down some or all of the hardware components.

- Airflow on page 31
- Fan Trays on page 32
- Air Filters on page 33
- Power Supply Cooling System on page 33

Airflow

Figure 15 on page 32 shows the airflow through the router.

Figure 15: Airflow Through the Chassis

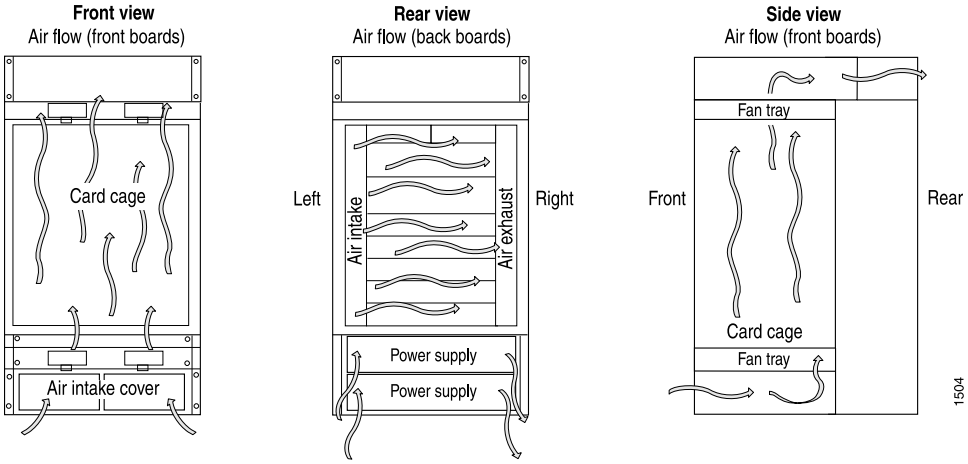

Fan Trays

NOTE: **The standard fan trays and quiet fan trays are not interchangeable with each other. All fans in the chassis must be either standard fan trays or quiet fan trays.**

The cooling system contains the following fan trays:

- One rear fan tray cools the components installed in the rear card cage (the Routing Engines, control boards, SCGs, and the SIBs). The T640 router supports the following types of rear fan trays:
  - The standard rear fan tray with five blowers (EOL) is supported by Junos OS 5.3 and later. It has no label and is not interchangeable with the standard front fan trays.
  - The standard rear fan tray with eight fans is supported by Junos OS 8.5 and later. It has no label and is not interchangeable with the standard front fan trays.
  - The quiet rear fan tray, labeled **REAR FANTRAY FAN-R-S** and supported by Junos OS 11.1 and later, contains eight fans and is not interchangeable with the quiet front fan trays.
- One upper front fan tray and one lower front fan tray that cool the components installed in the front card cage (the FPCs, PICs, CIP, and midplane). The T640 router supports the following front fan trays:
  - The upper and lower standard front fan trays, each of which contain six fans and have no labels. Both standard fan trays are interchangeable with each other.
  - Each quiet front fan tray contains four fans, as indicated by the four fan icons on the faceplate.

Copyright © 2019, Juniper Networks, Inc.

NOTE: The quiet upper front fan tray and quiet lower front fan tray are not interchangeable with each other. In addition to the labels, the quiet upper fan tray also has an upward pointing arrow above the four fan icons on the faceplate.

The quiet upper front fan tray is labeled **FAN-T-FTOP-S** and **UPPER FANTRAY** (see Figure 16 on page 33).

Figure 16: Quiet Upper Front Fan Tray

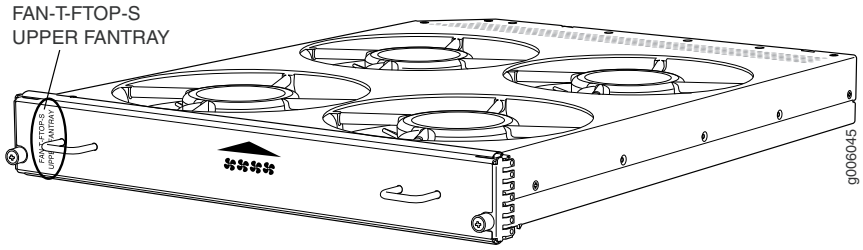

The quiet lower front fan tray is labeled **FAN-T-FBOT-S** and **LOWER FANTRAY** (see Figure 17 on page 33).

Figure 17: Quiet Lower Front Fan Tray

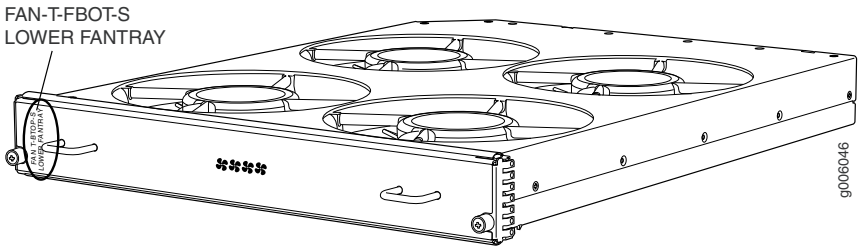

All fan trays are hot-insertable and hot-removable.

Air Filters

The cooling system contains a front air filter and a rear air filter. All air filters are hot-insertable and hot-removable.

Power Supply Cooling System

The power supply cooling system consists of the following:

- Each DC power supply contains one fan that cools that power supply.
- Each AC power supply contains two fans that cool that power supply.

Related Documentation

- T640 Hardware Component Overview on page 13
- Maintaining the T640 Air Filters on page 464
- Maintaining the T640 Fan Trays on page 465

Copyright © 2019, Juniper Networks, Inc.

- Troubleshooting the T640 Cooling System on page 491

Copyright © 2019, Juniper Networks, Inc.

CHAPTER 5

Host Subsystem Components and Descriptions

- T640 Host Subsystem Description on page 35
- T640 Routing Engine Description on page 36
- T640 RE-600 Description on page 37
- T640 RE-600 LEDs on page 39
- T640 RE-1600 Description on page 39
- T640 RE-1600 LEDs on page 41
- T640 RE-C1800 Description on page 42
- T640 RE-C1800 LEDs on page 43
- T640 RE-2000 Description on page 44
- T640 RE-2000 LEDs on page 45
- Routing Engine Specifications on page 46
- Supported Routing Engines by Router on page 52
- T640 LCC-CB Description on page 67
- T640 LCC-CB LEDs on page 68
- T640 Standard Control Boards Description on page 69
- T640 Standard Control Boards LEDs on page 70
- T640 T Series Control Boards (T-CBs) Description on page 70
- T640 T Series Control Boards (T-CBs) LEDs on page 72

T640 Host Subsystem Description

The host subsystem provides the routing and system management functions of the router. You can install one or two host subsystems on the router. To operate, each host subsystem functions as a unit; the Routing Engine requires the corresponding control board, and vice versa.

Copyright © 2019, Juniper Networks, Inc.

NOTE: We recommend that you install two host subsystems for redundant protection. If you install only one host subsystem, we recommend that you install it in slot **RE0**.

Each host subsystem has three LEDs that display its status. The host subsystem LEDs are located on the upper right of the craft interface. For more information about the host subsystem LEDs, see "T640 Craft Interface Host Subsystem LEDs" on page 24.

Related Documentation

- T640 Hardware Component Overview on page 13
- T640 Routing Engine Description on page 36
- *T640 Control Boards Description*
- Taking the T640 Host Subsystem Offline on page 319
- Maintaining the T640 Host Subsystem on page 467

T640 Routing Engine Description

The Routing Engine runs Junos OS. The software processes that run on the Routing Engine maintain the routing tables, manage the routing protocols used on the router, control the router interfaces, control some chassis components, and provide the interface for system management and user access to the router.

The T640 router is shipped with Junos OS preinstalled and ready to be configured when the T640 router is powered on. There are three copies of the software: one on a CompactFlash card in the Routing Engine, one on a hard disk or solid-state drive in the Routing Engine, and one on a PC Card or USB storage device that can be inserted into the slot in the Routing Engine faceplate.

You can install one or two Routing Engines in the router. The Routing Engines install into the upper rear of the chassis in the slots labeled **RE0** and **RE1**. Each Routing Engine requires a control board to be installed in the adjacent slot. **RE0** installs below **CB0**, and **RE1** installs above **CB1**. A Routing Engine does not power up without a control board present in the adjacent slot.

NOTE: If two Routing Engines are installed, they must both be the same hardware model.

If two Routing Engines are installed, one functions as the master and the other acts as the backup. If the master Routing Engine fails or is removed, and the backup is configured appropriately, the backup takes over as the master. If the host system is redundant, the backup Routing Engine is hot-removable and hot-insertable, but the master Routing Engine is hot-pluggable. A Routing Engine that is not redundant requires that you power down the router before replacement.

Copyright © 2019, Juniper Networks, Inc.

NOTE: For specific information about Routing Engine components (for example, the amount of DRAM), issue the **show chassis routing-engine** command.

The ports for connecting the Routing Engine to external management devices are located on the Connector Interface Panel (CIP).

The T640 router supports the Routing Engines listed in Table 11 on page 37.

Table 11: T640 Supported Routing Engines

Name	Model Number	First Supported Junos OS Release
RE-600 (EOL) "T640 RE-600 Description" on page 37	RE-600-2048	5.3
RE-1600 (EOL) "T640 RE-1600 Description" on page 39	RE-1600-2048	6.2
RE-2000 "T640 RE-2000 Description" on page 44	RE-A-2000-4096	8.1
RE-C1800 "T640 RE-C1800 Description" on page 42	RE-DUO-C1800-8G	11.2 for standalone T640 routers
	RE-DUO-C1800-16G	11.4R2 for standalone T640 routers 13.3R1 for T640 routers connected to a TX Matrix router.

Related Documentation

- T640 Hardware Component Overview on page 13
- T640 Routing Engine Functions on page 5
- Maintaining the T640 Routing Engines on page 468

T640 RE-600 Description

Each Routing Engine 600 (shown in Figure 18 on page 38) consists of the following components:

- CPU—Runs Junos OS to maintain the router's routing tables and routing protocols. It has a Pentium-class processor.
- SDRAM—Provides storage for the routing and forwarding tables and for other Routing Engine processes.
- CompactFlash card—Provides primary storage for software images, configuration files, and microcode. The fixed CompactFlash card is inaccessible from outside the router.
- Hard disk—Provides secondary storage for log files, memory dumps, and rebooting the system if the CompactFlash card fails.
- EEPROM—Stores the serial number of the Routing Engine.
- Interfaces for management access—Provide information about Routing Engine status to devices (console, laptop, or terminal server) connected to ports located on the Connector Interface Panel (CIP).

Figure 18: Routing Engine 600

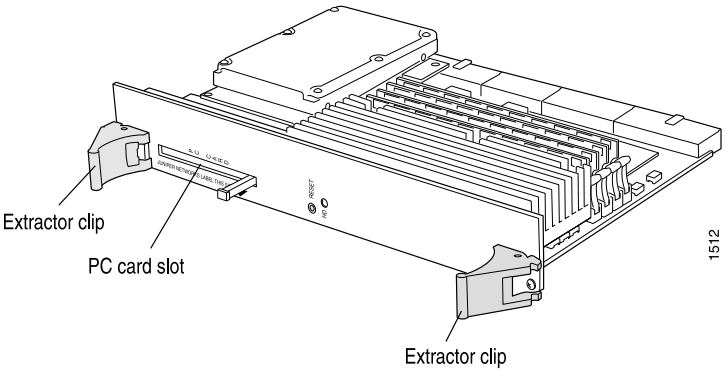

The faceplate of the Routing Engine 600 contains the following:

- One PC Card slot—Accepts a removable PC Card, which stores software images for system upgrades.

  A slot labeled **PC CARD** on the Routing Engine faceplate accepts a Type I PC Card, as defined in the *PC Card Standard* published by the Personal Computer Memory Card International Association (PCMCIA). The router is shipped with a PC Card that contains Junos OS. The PC Card can be used to copy Junos OS from the PC Card onto the Routing Engine. You can also copy Junos OS from the Routing Engine onto a PC Card, for example, to create a backup copy of upgrade software that you have obtained from Juniper Networks. Instructions for copying software to a PC Card are available at the Juniper Networks Support Web site (https://www.juniper.net/support/). After logging in, navigate to the Customer Support Center, then to the download page for Junos OS.

  NOTE: **The software on a PC Card is loaded only onto the Routing Engine into which the PC Card is inserted. It is not automatically copied to the other Routing Engine.**

- Reset button—Reboots the Routing Engine when pressed.

Copyright © 2019, Juniper Networks, Inc.

- HD LED

The RE-600 Routing Engine boots from the storage media in this order: the PC Card (if present), then the CompactFlash card (if present), then the hard disk.

Related Documentation

- T640 Hardware Component Overview on page 13
- T640 Host Subsystem Description on page 35
- T640 Routing Engine Description on page 36
- T640 RE-600 LEDs on page 39
- Maintaining the T640 Routing Engines on page 468

T640 RE-600 LEDs

Table 12 on page 39 describes the functions of the HD LED.

Table 12: Routing Engine 600 LEDs

Label	Color	State	Description
HD	Yellow	On steadily or blinking	Indicates activity on the hard drive.

NOTE: The LEDs on the Routing Engine do not necessarily indicate routing-related activity.

NOTE: The LEDs that report host module status (including Routing Engine status) are on the craft interface rather than the Routing Engine faceplate.

Related Documentation

- T640 Host Subsystem Description on page 35
- T640 Routing Engine Description on page 36
- T640 RE-600 Description on page 37
- T640 LED Overview on page 486
- Troubleshooting the T640 Host Subsystem on page 494

T640 RE-1600 Description

The RE-1600 Routing Engine boots from the storage media in this order: the PC Card in **SLOT 0** (if present), then the PC Card in **SLOT 1** (if present), then the CompactFlash card (if present), then the hard disk.

Figure 19: Routing Engine 1600 (RE-1600)

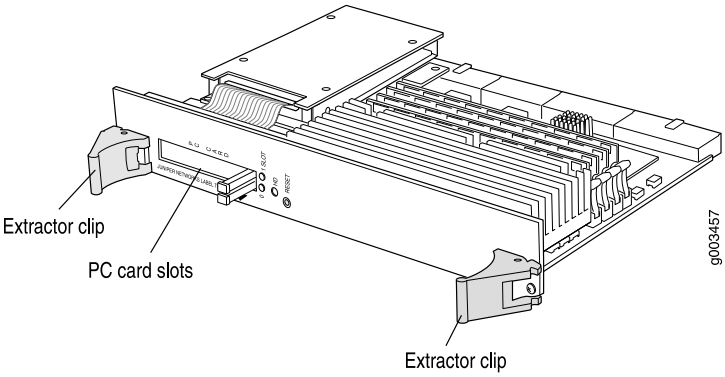

Each RE-1600 (shown in Figure 19 on page 40) consists of the following components:

- CPU—Runs Junos OS to maintain the router's routing tables and routing protocols. It has a Pentium-class processor.
- SDRAM—Provides storage for the routing and forwarding tables and for other Routing Engine processes.
- CompactFlash card—Provides primary storage for software images, configuration files, and microcode. The fixed CompactFlash card is inaccessible from outside the router.
- Hard disk—Provides secondary storage for log files, memory dumps, and rebooting the system if the CompactFlash card fails.
- EEPROM—Stores the serial number of the Routing Engine.
- Interfaces for management—Provide information about Routing Engine status to devices (console, laptop, or terminal server) connected to the Routing Engine ports located on the CIP.

The faceplate of the RE-1600 contains the following:

- Two PC Card slots—Accept removable PC Cards, which store software images for system upgrades.

  The slots accept a Type I PC Card, as defined in the *PC Card Standard* published by the Personal Computer Memory Card International Association (PCMCIA). The router is shipped with a PC Card that contains Junos OS. The PC Card can be used to copy Junos OS from the PC Card onto the Routing Engine. You can also copy Junos OS from the Routing Engine onto a PC Card, for example, to create a backup copy of upgrade software that you have obtained from Juniper Networks. Instructions for copying software to a PC Card are available at the Juniper Networks Support Web site (https://www.juniper.net/support/). After logging in, navigate to the Customer Support Center, then to the download page for Junos OS.

NOTE: **The software on a PC Card is loaded only onto the Routing Engine into which the PC Card is inserted. It is not automatically copied to the other Routing Engine.**

Copyright © 2019, Juniper Networks, Inc.

- Reset button—Reboots the Routing Engine when pressed.
- **HD** LED and **Slot LEDs 0 and 1** LEDs.

Related Documentation

- T640 Hardware Component Overview on page 13
- T640 Host Subsystem Description on page 35
- T640 Routing Engine Description on page 36
- T640 RE-1600 LEDs on page 41
- Maintaining the T640 Routing Engines on page 468

T640 RE-1600 LEDs

LEDs—Table 13 on page 41 describes the functions of these LEDs.

Table 13: Routing Engine 1600 LEDs

Label	Color	State	Description
Slot LEDs 0 and 1	Red and green alternately	Blinking	Indicates that the Routing Engine is booting and the firmware is checking if a PC card is installed.
	Green	On steadily	Indicates that the Routing Engine booted from the PC Card.
HD	Yellow	On steadily or blinking	Indicates activity on the hard drive.

NOTE: The LEDs on the Routing Engine do not necessarily indicate routing-related activity.

NOTE: The LEDs that report host module status (including Routing Engine status) are on the craft interface rather than the Routing Engine faceplate.

Related Documentation

- T640 Host Subsystem Description on page 35
- T640 Routing Engine Description on page 36
- T640 RE-1600 Description on page 39
- Troubleshooting the T640 Host Subsystem on page 494

Copyright © 2019, Juniper Networks, Inc.

T640 RE-C1800 Description

- RE-C1800 Components on page 42
- RE-C1800 Boot Order on page 42

RE-C1800 Components

Each RE-C1800 (Figure 20 on page 42) consists of the following components:

- CPU—Runs the Junos OS to maintain the routing tables and routing protocols.
- DRAM—Provides storage for the routing and forwarding tables and for other Routing Engine processes.
- EEPROM—Stores the serial number of the Routing Engine.
- Interfaces for management access—Provide information about Routing Engine status to devices (console, laptop, or terminal server) connected to the management ports located on the CIP.

Figure 20: Routing Engine C1800 (RE-C1800)

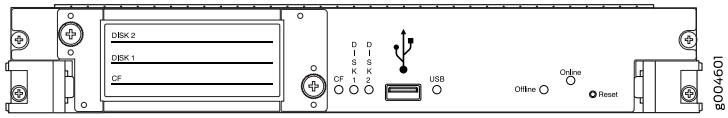

The faceplate of the RE-C1800 contains the following:

- USB port—Provides a removable media interface through which you can install the Junos OS manually. The Junos OS supports USB version 1.1 and version 2.0 devices.
- CompactFlash card slot—Provides primary storage for software images, configuration files, and microcode.
- Two solid-state disk (SSD) slots—Provides secondary storage for log files, memory dumps, and rebooting the system if the CompactFlash card fails.

NOTE: **DISK2 is not currently supported.**

- Reset button—Reboots the Routing Engine when pressed.
- Offline button—Takes the Routing Engine offline when pressed.
- Four LEDs—**CF**, **DISK1**, **DISK2**, and **ONLINE**.
- Extractor clips—Control the locking system that secures the Routing Engine.

RE-C1800 Boot Order

The RE-C1800 Routing Engine boots from the storage media in this order: the USB device, then the CompactFlash card (if present), then **DISK1**, then the LAN.

Copyright © 2019, Juniper Networks, Inc.

Related Documentation

- T640 Hardware Component Overview on page 13
- T640 Host Subsystem Description on page 35
- T640 Routing Engine Description on page 36
- T640 RE-C1800 LEDs on page 43

T640 RE-C1800 LEDs

Figure 21 on page 43 shows the RE-C1800 LEDs. Table 14 on page 43 describes the functions of the LEDs on the faceplate of the Routing Engine.

Figure 21: RE-C1800 LEDs

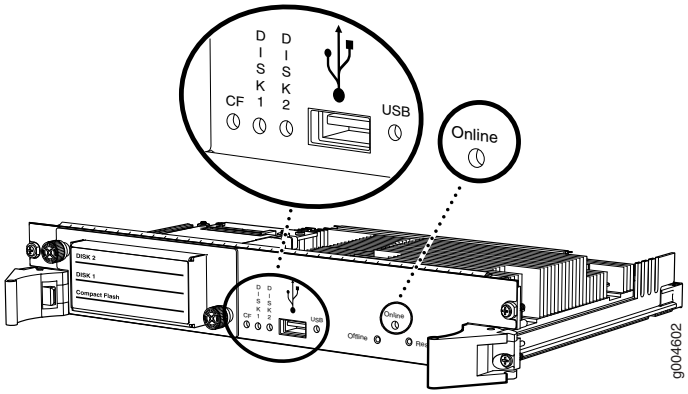

NOTE: The LEDs on the Routing Engine do not necessarily indicate routing-related activity.

Table 14: Routing Engine C1800 LEDs

Label	Color	State	Description
CF	Green	On steadily	Indicates disk activity on the CompactFlash card.
	—	Off	There is no disk activity on the CompactFlash card.
DISK1	Green	On steadily	Indicates activity for the disk.
	—	Off	There is no activity for the disk.
DISK2	Green	On steadily	Not applicable.
	—	Off	NOTE: The **DISK2** LEDis not currently supported.

Table 14: Routing Engine C1800 LEDs (continued)

Label	Color	State	Description
ONLINE	Green	On steadily	Routing Engine is functioning normally.
	Red	On steadily	Routing Engine is not functioning normally.
	—	Off	Routing Engine is not online or not functioning normally.
USB	Green	On steadily	Indicates activity on the USB port.
	—	Off	There is no activity on the USB port.

Related Documentation

- T640 Routing Engine Description on page 36
- T640 RE-C1800 Description on page 42
- Troubleshooting the T640 Host Subsystem on page 494

T640 RE-2000 Description

Each RE-2000 (shown in Figure 22 on page 45) consists of the following components:

- CPU—Runs Junos OS to maintain the router's routing tables and routing protocols. It has a Pentium-class processor.
- DRAM—Provides storage for the routing and forwarding tables and for other Routing Engine processes.
- CompactFlash card—Provides primary storage for software images, configuration files, and microcode. The fixed CompactFlash card is inaccessible from outside the router.
- Hard disk—Provides secondary storage for log files, memory dumps, and rebooting the system if the CompactFlash card fails.
- EEPROM—Stores the serial number of the Routing Engine.
- Interfaces for management access—Provide information about Routing Engine status to devices (console, laptop, or terminal server) connected to the Routing Engine ports located on the CIP.

Copyright © 2019, Juniper Networks, Inc.

Figure 22: Routing Engine 2000 (RE-2000)

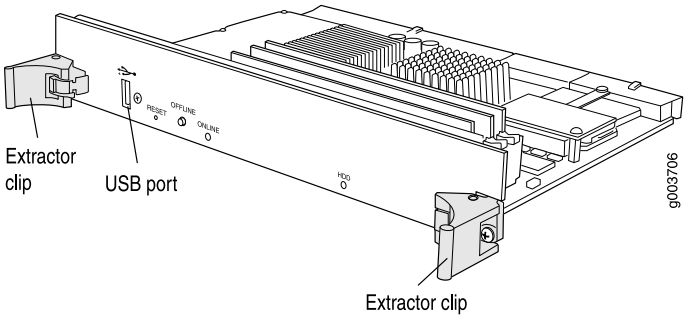

The faceplate of the RE-2000 contains the following:

- USB port—Provides a removable media interface through which you can install the Junos OS manually. The Junos OS supports USB version 1.0.
- Reset button—Reboots the Routing Engine when pressed.
- Offline button—Takes the Routing Engine offline when pressed.
- Extractor clips—Control the locking system that secures the Routing Engine.
- **HDD** and **ONLINE** LEDs

The RE-2000 Routing Engine boots from the storage media in this order: the USB device, then the CompactFlash card (if present), then the hard disk, then the LAN.

Related Documentation

- T640 Hardware Component Overview on page 13
- T640 Host Subsystem Description on page 35
- T640 Routing Engine Description on page 36
- T640 RE-2000 LEDs on page 45
- Maintaining the T640 Routing Engines on page 468

T640 RE-2000 LEDs

Table 15 on page 45 describes the functions of these LEDs.

Table 15: Routing Engine 2000 LEDs

Label	Color	State	Description
HDD	Blue	On steadily	Indicates disk activity for the hard disk drive.
ONLINE	Green	On steadily	Routing Engine is functioning normally.
		Blinking	Routing Engine is transitioning online.
	Red	On steadily	Routing Engine has failed.

NOTE: The LEDs on the Routing Engine do not necessarily indicate routing-related activity.

Related Documentation

- T640 Host Subsystem Description on page 35
- T640 Routing Engine Description on page 36
- T640 RE-2000 Description on page 44
- Troubleshooting the T640 Host Subsystem on page 494

Routing Engine Specifications

Table 16 on page 46 lists the current specifications for Routing Engines supported on M Series, MX Series, and T Series routers. Table 17 on page 50 lists the hardware specifications of the Routing Engines with VMHost support. Table 18 on page 51 lists the specifications for end-of-life Routing Engines.

NOTE: For a list of the routing engines that are supported on the M Series, MX Series, T Series, and PTX routers, see "Supported Routing Engines by Router" on page 52.

NOTE: For information about PTX Series Routing Engine specifications, see *Routing Engines Supported on PTX Series Routers*.

Table 16: Routing Engine Specifications

Routing Engine	Processor	Memory	Connection to PFEs	Disk	Media	First Junos OS Support	Switch Control Board
RE-400-768	400-MHz Celeron	768 MB	Fast Ethernet	40 GB hard disk	1 GB CompactFlash card	9.0	–
RE-A-1000-2048	1.0-GHz Pentium	2048 MB	Gigabit Ethernet	40 GB hard disk	1 GB CompactFlash card	8.1	–
RE-A-2000-4096	2.0-GHz Pentium	4096 MB	Gigabit Ethernet	40 GB hard disk	1 GB CompactFlash card	8.1	–
RE-S-1300-2048	1.3-GHz Pentium	2048 MB	Gigabit Ethernet	40 GB hard disk	1 GB CompactFlash card	8.2	SCB, SCBE

Copyright © 2019, Juniper Networks, Inc.

Table 16: Routing Engine Specifications (continued)

Routing Engine	Processor	Memory	Connection to PFEs	Disk	Media	First Junos OS Support	Switch Control Board
RE-S-2000-4096	2.0-GHz Pentium	4096 MB	Gigabit Ethernet	40 GB hard disk	1 GB CompactFlash card	8.2	SCB, SCBE
RE-C1800	1.8-GHz	8 GB	Gigabit Ethernet	SSD	4 GB CompactFlash card	T1600 router in a routing matrix: 9.6R2 Standalone T640 or T1600 router:11.2	CB-T for a standalone router. CB-LCC for a router in a routing matrix.
	1.8 Ghz	16 GB	Gigabit Ethernet	SSD	4 GB CompactFlash card	32-bit Junos OS on a standalone T1600 router: 11.4R2 32-bit Junos OS on a T1600 router in a routing matrix: 11.4R2 64-bit Junos OS on a standalone T1600 router: 11.4R2 64-bit Junos OS on a T1600 router in a routing matrix: 11.4R2	CB-T for a standalone router. CB-LCC for a router in a routing matrix.
RE-C2600	2.6-GHz	16 GB	Gigabit Ethernet	SSD	4 GB CompactFlash card	TX Matrix Plus router: 9.6R2	–
RE-A-1800x2	1800-MHz	8 GB or 16 GB	Gigabit Ethernet	32 GB SSD	4 GB CompactFlash card	10.4	–

Copyright © 2019, Juniper Networks, Inc.

Table 16: Routing Engine Specifications (continued)

Routing Engine	Processor	Memory	Connection to PFEs	Disk	Media	First Junos OS Support	Switch Control Board
RE-S-1800x2	1800-MHz	8 GB or 16 GB	Gigabit Ethernet	32 GB SSD	4 GB CompactFlash card	10.4	SCB, SCBE, SCBE2, SCBE3
RE-S-1800x4	1800-MHz	8GB or 16 GB	Gigabit Ethernet	32 GB SSD	4 GB CompactFlash card	10.4	SCB, SCBE, SCBE2, SCBE3
RE-S-MX104	1.8-GHz	4 GB	Gigabit Ethernet	–	8 GB NAND Flash	13.2	–
RE-B-1800x1-4G	1.73-GHz	4 GB	Gigabit Ethernet	64 GB SSD	4 GB CompactFlash card	12.1R2, 11.4R4, and 12.2R1	–
RE-MX2000-1800x4	1.8- GHz	16 GB	Gigabit Ethernet	32 GB SSD	4 GB Fixed Internal CompactFlash card	12.3R2	SCB, SCBE
RE-S-1800X4-32G-S	1.8- Ghz	32 GB	Gigabit Ethernet	32 GB SSD	4 GB Fixed Internal CompactFlash card	• 12.3R4 • 13.2R1	SCB, SCBE, SCBE2, SCBE3
REMX2K-1800-32G-S	1.8- Ghz	32 GB	Gigabit Ethernet	32 GB SSD	4GB Fixed Internal CompactFlash card	• 12.3R4 • 13.2R1	–
RE-S-X6-64G, RE-S-X6-64G-LT	2 Ghz	64 GB	Gigabit Ethernet	Two 50-GB SSDs	-	15.1F4, 16.1	SCBE2, SCBE3
REMX2K-X8-64G	2.3 Ghz	64 GB	Gigabit Ethernet	Two 100-GB SSDs	-	15.1F5-S1, 16.1R2, and 16.2R1	–
REMX2K-X8-64G-LT	2.3 Ghz	64 GB	Gigabit Ethernet	Two 100-GB SSDs	-	17.2R1	–
REMX2008-X8-64G	2.3 Ghz	64 GB	Gigabit Ethernet	Two 50-GB SSDs	–	15.1F7	–
RE-S-1600x8	1.6 Ghz	64 GB	Gigabit Ethernet	Two 50-GB SSDs	–	17.3R1	–

Copyright © 2019, Juniper Networks, Inc.

Table 16: Routing Engine Specifications (continued)

Routing Engine	Processor	Memory	Connection to PFEs	Disk	Media	First Junos OS Support	Switch Control Board
REMX2008-X8-64G-LT	2.1 Ghz	64 GB	Gigabit Ethernet	Two 100-GB SSDs	-	17.2R1	-
REMX2008-X8-128G	2.3 Ghz	128 GB	Gigabit Ethernet	Two 200-GB SSDs	-	18.2R1	-
RE-S-X6-128G	2.1 Ghz	128 GB	Gigabit Ethernet	Two 200-GB SSDs	-	18.1R1	SCBE2, SCBE3
REMX2K-X8-128G	2.1 Ghz	128 GB	Gigabit Ethernet	Two 200-GB SSDs	-	18.1R1	-
JNP10003-RE1	1.6-GHz	64 GB	Gigabit Ethernet	Two 100 GB SSDs	-	17.3R1	-
JNP10003-RE1-LT	1.6-GHz	64 GB	Gigabit Ethernet	Two 100 GB SSDs	-	18.1R1	-
JNP10K-RE0	2.5 GhZ	32 GB	Gigabit Ethernet	Two 50 GB SSDs	-	17.2R1	-
JNP10K-RE1	2.3 GhZ	64 GB	Gigabit Ethernet	Two 200 GB SSDs	-	18.2R1	-
JNP10K-RE1-LT	2.3 GhZ	64 GB	Gigabit Ethernet	Two 200 GB SSDs	-	18.3R1	-
JNP10K-RE1-128	2.3 GhZ	128 GB	Gigabit Ethernet	Two 200 GB SSDs	-	18.3R1	-

NOTE: Use shielded CAT5e cable for connecting the AUX, CONSOLE, and MGMT ports in RE-S-X6-64G, REMX2K-X8-64G, and REMX2008-X8-64G Routing Engines.

Table 17 on page 50 lists the hardware specifications of the Routing Engines with VMHost support.

Table 17: Hardware Specifications of the RE-MX-X6, RE-MX-X8, RE-PTX-X8, RCBPTX, RE-QFX10002-60C, and RE-PTX10002-60C Routing Engines

Model Number	Supported on Device	Specifications
RE-S-X6-64G	MX240, MX480, and MX960	• 6-core Haswell CPU • Wellsburg PCH-based Routing Engine with 64-GB DRAM and two 64-GB solid-state drives (SSDs)
REMX2K-X8-64G	MX2020 and MX2010	• 8-core Haswell CPU • Wellsburg PCH-based Routing Engine with 64-GB DRAM and two 64-GB SSDs
RE-PTX-X8-64G	PTX5000	• 8-core Haswell CPU • Wellsburg PCH-based Routing Engine with 64-GB DRAM and two 64-GB SSDs • New Control Board CB2-PTX
RCBPTX	PTX3000	• Wellsburg PCH-based Routing Engine with 64-GB DRAM and two 64-GB SSDs • Multi-core Haswell CPU RCB combines the functionality of a Routing Engine, Control Board, and Centralized Clock Generator (CCG)
RE-S-1600x8	MX10003	• High-performance 1.6-GHz Intel 8 Core X86 CPU • 64-GB DDR4 RAM • 100-GB SATA SSD
RE-S-1600x8	MX204	• High-performance 1.6-GHz Intel 8 Core X86 CPU • 32-GB DDR4 RAM • 100-GB SATA SSD
RE-QFX10002-60C	QFX10002-60C	• High-performance 1.6-GHz Intel 8 Core X86 CPU • 32-GB DDR4 RAM • Two 50-GB SATA SSD
RE-PTX10002-60C	PTX10002-60C	• High-performance 1.6-GHz Intel 8 Core X86 CPU • 32-GB DDR4 RAM • Two 50-GB SATA SSD
RE-ACX-5448	ACX5448	• High-performance 1.6-GHz Intel 8 Core X86 CPU • 32-GB two DIMM DRAM • Two 100-GB SATA SSD
RE-X10	MX10008	• High-performance 1.6-GHz Intel 10 Core X86 CPU • 64-GB DDR4 RAM • Two 200-GB SATA SSD

Copyright © 2019, Juniper Networks, Inc.

Table 18: End-of-Life Routing Engine Specifications

Routing Engine	Processor	Memory	Connection to PFEs	Disk	Media	First Junos OS Support	EOL Details
RE-333-256	333-MHz Pentium II	256 MB	Fast Ethernet	6.4 GB hard disk	80 MB CompactFlash card	3.4	PSN-2003-01-063
RE-333-768	333-MHz Pentium II	768 MB	Fast Ethernet	6.4 GB hard disk	80 MB CompactFlash card	3.4	PSN-2003-01-063
RE-600-512	600-MHz Pentium III	512 MB	Fast Ethernet	30 GB hard disk	256 MB CompactFlash card	5.4	PSN-2004-07-019
RE-600-2048	600-MHz Pentium III	2048 MB	Fast Ethernet	40 GB hard disk	1 GB CompactFlash card	5.3	PSN-2008-02-018
RE-850-1536	850-MHz Pentium III	1536 MB	Fast Ethernet	40 GB hard disk	1 GB CompactFlash card	7.2	PSN-2011-04-226
RE-M40	200-MHz Pentium	256 MB	Fast Ethernet	6.4 GB hard disk	80 MB CompactFlash card	3.2	FA-HW-0101-001
RE-M40-333-768	333-MHz Pentium II	768 MB	Fast Ethernet	10 GB hard disk	80 MB CompactFlash card	4.2	PSN-2003-01-063
RE-M40-600-2048	600-MHz Pentium III	2048 MB	Fast Ethernet	30 GB hard disk	128 MB CompactFlash card	5.4	PSN-2004-11-020
RE-1600-2048	1.6-GHz Pentium M	2048 MB	Gigabit Ethernet	40 GB hard disk	1 GB CompactFlash card	6.2	PSN-2008-02-019

NOTE: The memory in Table 16 on page 46 indicates the amount of total memory. To determine the amount of available memory, issue the **show chassis routing-engine** CLI command.

On routers that accept two Routing Engines, you cannot mix Routing Engine types except for a brief period (one minute or so) during an upgrade or downgrade to two Routing Engines of the same type.

Related Documentation

- Supported Routing Engines by Router on page 52

Supported Routing Engines by Router

The following tables list the Routing Engines that each router supports, the first supported release for the Routing Engine in the specified router, the management Ethernet interface, and the internal Ethernet interfaces for each Routing Engine.

- M7i Routing Engines on page 52
- M10i Routing Engines on page 53
- M40e Routing Engines on page 53
- M120 Routing Engines on page 54
- M320 Routing Engines on page 54
- MX5, MX10, MX40, and MX80 Routing Engine on page 55
- MX104 Routing Engines on page 55
- MX204 Routing Engine on page 55
- MX240 Routing Engines on page 56
- MX480 Routing Engines on page 57
- MX960 Routing Engines on page 58
- MX2008 Routing Engines on page 59
- MX2010 Routing Engines on page 59
- MX2020 Supported Routing Engines on page 60
- MX10003 Routing Engines on page 61
- MX10008 Routing Engines on page 61
- PTX1000 Routing Engines on page 61
- PTX3000 Routing Engines on page 62
- PTX5000 Routing Engines on page 62
- PTX10008 and PTX10016 Routing Engines on page 63
- T320 Routing Engines on page 63
- T640 Routing Engines on page 64
- T1600 Routing Engines on page 65
- T4000 Routing Engines on page 65
- TX Matrix Routing Engines on page 66
- TX Matrix Plus Routing Engines on page 67
- TX Matrix Plus (with 3D SIBs) Routing Engines on page 67

M7i Routing Engines

Table 19 on page 53 lists the Routing Engines supported by the M7i router. The M7i router supports 32-bit Junos OS only.

Copyright © 2019, Juniper Networks, Inc.

Table 19: M7i Routing Engines

Model Number	Name in CLI Output	First Supported 32-bit Junos OS Release	Management Ethernet Interface	Internal Ethernet Interface
RE-400-768 (EOL details: TSB16445)	**RE-5.0**	9.0	fxp0	fxp1
RE-850-1536 (EOL details: TSB15553)	**RE-850**	7.2	fxp0	fxp1
RE-B-1800X1-4G	**RE-B-1800x1**	11.4R4 12.1R2	fxp0	em0

M10i Routing Engines

Table 20 on page 53 lists the Routing Engines supported by the M10i router. The M10i router supports 32-bit Junos OS only.

Table 20: M10i Routing Engines

Model Number	Name in CLI Output	First Supported 32-bit Junos OS Release	Management Ethernet Interface	Internal Ethernet Interface
RE-400-768 (EOL details: TSB16445)	**RE-5.0**	9.0	fxp0	fxp1 fxp2
RE-850-1536 (EOL details: TSB15553)	**RE-850**	7.2	fxp0	fxp1 fxp2
RE-B-1800X1-4G	**RE-B-1800x1**	11.4R4 12.1R2	fxp0	em0

M40e Routing Engines

Table 21 on page 53 lists the Routing Engines supported by the M40e router.

Table 21: M40e Routing Engines

Model Number	Name in CLI Output	First Supported Junos OS Release	Management Ethernet Interface	Internal Ethernet Interface
RE-600-2048 (EOL details: TSB14373)	**RE-3.0** or **RE-3.0 (RE-600)**	5.3	fxp0	fxp1 fxp2
RE-A-1000-2048	**RE-A-1000**	8.1	fxp0	fxp1 fxp2

Copyright © 2019, Juniper Networks, Inc.

M120 Routing Engines

Table 22 on page 54 lists the Routing Engines supported by the M120 router.

Table 22: M120 Routing Engines

Model Number	Name in CLI Output	First Supported 32-bit Junos OS Release	First Supported 64-bit Junos OS Release	Management Ethernet Interface	Internal Ethernet Interface
RE-A-1000-2048	**RE-A-1000**	8.0R2	–	fxp0	fxp1 fxp2
RE-A-2000-4096	**RE-A-2000**	8.0R2	–	fxp0	em0 bcm0
RE-A-1800X2-8G	**RE-A-1800x2**	• 11.4R5 • 12.1R3	10.4	fxp0	fxp1 fxp2
RE-A-1800X2-16G	**RE-A-1800x2**	• 11.4R5 • 12.1R3	10.4	fxp0	fxp1 fxp2
RE-A-1800X4-16G	**RE-A-1800x4**	• 11.4R5 • 12.1R3	10.4	fxp0	em0 em1

M320 Routing Engines

Table 23 on page 54 lists the Routing Engines supported by the M320 router.

Table 23: M320 Routing Engines

Model Number	Name in CLI Output	First Supported 32-bit Junos OS Release	First Supported 64-bit Junos OS Release	Management Ethernet Interface	Internal Ethernet Interface
RE-1600-2048 (EOL details: TSB14374)	**RE-4.0**	6.2	–	fxp0	fxp1 fxp2
RE-A-2000-4096	**RE-A-2000**	8.1	–	fxp0	em0 bcm0
RE-A-1800X2-8G	**RE-A-1800x2**	• 11.4R5 • 12.1R3	10.4	fxp0	em0 bcm0

Copyright © 2019, Juniper Networks, Inc.

Table 23: M320 Routing Engines (continued)

Model Number	Name in CLI Output	First Supported 32-bit Junos OS Release	First Supported 64-bit Junos OS Release	Management Ethernet Interface	Internal Ethernet Interface
RE-A-1800X2-16G	**RE-A-1800x2**	• 11.4R5 • 12.1R3	10.4	fxp0	em0 bcm0
RE-A-1800X4-8G	**RE-A-1800X4**	• 11.4R5 • 12.1R3 • 12.2	10.4	fxp0	em0 em1

MX5, MX10, MX40, and MX80 Routing Engine

Table 24 on page 55 lists the Routing Engines supported by the MX5, MX10, MX40, and MX80 routers.

Table 24: MX5, MX10, MX40, and MX80 Routing Engine

Model Number	Name in CLI Output	First Supported 32-bit Junos OS Release	First Supported 64-bit Junos OS Release	Management Ethernet Interface	Internal Ethernet Interface
Built-in Routing Engine	**Routing Engine RE-MX80**	12.3	-	fxp0	em0 em1 NOTE: em1 is used to communicate with the MS-MIC when it is inserted.

MX104 Routing Engines

Table 25 on page 55 lists the Routing Engines supported by MX104 routers.

Table 25: MX104 Routing Engines

Model Number	Name in CLI Output	First Supported 32-bit Junos OS Release	First Supported 64-bit Junos OS Release	Management Ethernet Interface	Internal Ethernet Interface
RE-S-MX104	**Routing Engine**	13.2	–	fxp0	fxp1 fxp2

MX204 Routing Engine

Table 26 on page 56 lists the Routing Engines supported by the MX204 router.

Copyright © 2019, Juniper Networks, Inc.

Table 26: MX204 Routing Engine

Model Number	Name in CLI Output	First Supported 32-bit Junos OS Release	First Supported 64-bit Junos OS Release	Management Ethernet Interface	Internal Ethernet Interface
Built-in Routing Engine	**RE-S-1600x8**	-	17.4	fxp0	em2 em3 em4

MX240 Routing Engines

Table 27 on page 56 lists the Routing Engines supported by MX240 routers.

Table 27: MX240 Supported Routing Engines

Model Number	Name in CLI Output	First Supported 32-bit Junos OS Release	First Supported 64-bit Junos OS Release	Management Ethernet Interface	Internal Ethernet Interface
RE-S-1300-2048 (EOL details: TSB16556	**RE-S-1300**	9.0	–	fxp0	fxp1 fxp2
RE-S-2000-4096 (EOL details: TSB16735	**RE-S-2000**	9.0	–	fxp0	fxp1 fxp2
RE-S-1800X2-8G (EOL details: TSB16556	**RE-S-1800x2**	• 11.4R5 • 12.1R3	10.4	fxp0	em0 em1
RE-S-1800x2-16G (EOL details: TSB16556	**RE-S-1800x2**	• 11.4R5 • 12.1R3	10.4	fxp0	em0 em1
RE-S-1800X4-8G	**RE-S-1800X4**	• 11.4R5 • 12.1R3	10.4	fxp0	em0 em1
RE-S-1800X4-16G	**RE-S-1800x4**	• 11.4R5 • 12.1R3	10.4	fxp0	em0 em1
RE-S-1800X4-32G-S	**RE-S-1800X4**	• 12.3R4 • 13.2R1	• 12.3R4 • 13.2R1	fxp0	em0, em1
RE-S-X6-64G	**RE-S-2X00x6**	–	15.1F4 16.1R1	fxp0	ixlv0, igb0

Copyright © 2019, Juniper Networks, Inc.

Table 27: MX240 Supported Routing Engines (continued)

Model Number	Name in CLI Output	First Supported 32-bit Junos OS Release	First Supported 64-bit Junos OS Release	Management Ethernet Interface	Internal Ethernet Interface
RE-S-X6-64G-LT	**RE-S-2X00x6 -LT**	–	17.2R1	fxp0	ixlv0, igb0 em0
RE-S-X6-128G	**RE-S-2X00x6-128**	–	18.1R1	fxp0	ixlv0, igb0 em0

MX480 Routing Engines

Table 28 on page 57 lists the Routing Engines supported by MX480 routers.

Table 28: MX480 Supported Routing Engines

Model Number	Name in CLI Output	First Supported 32-bit Junos OS Release	First Supported 64-bit Junos OS Release	Management Ethernet Interface	Internal Ethernet Interface
RE-S-1300-2048 (EOL details: TSB16556	**RE-S-1300**	8.4	–	fxp0	fxp1 fxp2
RE-S-2000-4096 (EOL details: TSB16735	**RE-S-2000**	8.4	–	fxp0	fxp1 fxp2
RE-S-1800X2-8G (EOL details: TSB16556	**RE-S-1800x2**	• 11.4R5 • 12.1R3	10.4	fxp0	em0 em1
RE-S-1800X2-16G (EOL details: TSB16556	**RE-S-1800x2**	• 11.4R5 • 12.1R3	10.4	fxp0	em0 em1
RE-S-1800X4-8G	**RE-S-1800X4**	• 11.4R5 • 12.1R3	10.4	fxp0	em0 em1
RE-S-1800X4-16G	**RE-S-1800x4**	• 11.4R5 • 12.1R3	10.4	fxp0	em0 em1
RE-S-1800X4-32G-S	**RE-S-1800X4**	• 12.3R4 • 13.2R1	• 12.3R4 • 13.2R1	fxp0	em0 em1
RE-S-X6-64G	**RE-S-2X00x6**	–	15.1F4 16.1R1	fxp0	ixlv0, igb0

Copyright © 2019, Juniper Networks, Inc.

Table 28: MX480 Supported Routing Engines (continued)

Model Number	Name in CLI Output	First Supported 32-bit Junos OS Release	First Supported 64-bit Junos OS Release	Management Ethernet Interface	Internal Ethernet Interface
RE-S-X6-64G-LT	**RE-S-2X00x6 -LT**	–	17.2R1	fxp0	ixlv0, igb0 em0
RE-S-X6-128G	**RE-S-2X00x6-128**	–	18.1R1	fxp0	ixlv0, igb0 em0

MX960 Routing Engines

Table 29 on page 58 lists the Routing Engines supported by MX960 routers.

Table 29: MX960 Supported Routing Engines

Model Number	Name in CLI Output	First Supported 32-bit Junos OS Release	First Supported 64-bit Junos OS Release	Management Ethernet Interface	Internal Ethernet Interface
RE-S-1300-2048 (EOL details: TSB16556	**RE-S-1300**	8.2	–	fxp0	fxp1 fxp2
RE-S-2000-4096 (EOL details: TSB16735	**RE-S-2000**	8.2	–	fxp0	fxp1 fxp2
RE-S-1800X2-8G (EOL details: TSB16556	**RE-S-1800x2**	• 11.4R5 • 12.1R3	10.4	fxp0	em0 em1
RE-S-1800X2-16G (EOL details: TSB16556	**RE-S-1800x2**	• 11.4R5 • 12.1R3	10.4	fxp0	em0 em1
RE-S-1800X4-8G	**RE-S-1800x4**	• 11.4R5 • 12.1R3	10.4	fxp0	em0 em1
RE-S-1800X4-16G	**RE-S-1800x4**	• 11.4R5 • 12.1R3	10.4	fxp0	em0 em1
RE-S-1800X4-32G-S	**RE-S-1800x4**	• 12.3R4 • 13.2R1	• 12.3R4 • 13.2R1	fxp0	em0 em1
RE-S-X6-64G	**RE-S-2X00x6**	–	15.1F4 16.1R1	fxp0	ixlv0, igb0

Copyright © 2019, Juniper Networks, Inc.

Table 29: MX960 Supported Routing Engines (continued)

Model Number	Name in CLI Output	First Supported 32-bit Junos OS Release	First Supported 64-bit Junos OS Release	Management Ethernet Interface	Internal Ethernet Interface
RE-S-X6-64G (For MX960-VC)	**RE-S-2X00x6**	–	17.2R1	fxp0	ixlv0, igb0
RE-S-X6-64G-LT	**RE-S-2X00x6 -LT**	–	17.2R1	fxp0	ixlv0, igb0 em0
RE-S-X6-128G	**RE-S-2X00x6-128**	–	18.1R1	fxp0	ixlv0, igb0 em0

MX2008 Routing Engines

Table 30 on page 59 lists the Routing Engines supported by MX2008 routers.

Table 30: MX2008 Supported Routing Engines

Model Number	Name in CLI Output	First Supported 64-bit Junos OS Release	Management Ethernet Interface	Internal Ethernet Interface
REMX2008-X8-64G	**RE-MX2008-X8-64G**	15.1F7	fxp0	ixlv0 ixlv1
REMX2008-X8-64G-LT	**REMX2008-X8-64G-LT**	17.2R1	fxp0	ixlv0 ixlv1
REMX2008-X8-128G	RE-MX2008-X8-128G	18.2R1	fxp0	ixlv0 ixlv1

MX2010 Routing Engines

Table 31 on page 59 lists the Routing Engines supported by MX2010 routers.

Table 31: MX2010 Supported Routing Engines

Model Number	Name in CLI Output	First Supported 64-bit Junos OS Release	Management Ethernet Interface	Internal Ethernet Interface
RE-MX2000-1800X4	**RE-S-1800x4**	12.3R2	fxp0	em0 em1

Copyright © 2019, Juniper Networks, Inc.

Table 31: MX2010 Supported Routing Engines (continued)

Model Number	Name in CLI Output	First Supported 64-bit Junos OS Release	Management Ethernet Interface	Internal Ethernet Interface
REMX2K-1800-32G-S	**RE-S-1800x4**	• 12.3R4 • 13.2R1	fxp0	em0 em1
REMX2K-X8-64G	**RE-S-2X00x8**	• 15.1F5-S1 • 16.1R2 • 16.2R1	fxp0	ixlv0 ixlv1 em0
REMX2K-X8-64G-LT	**RE-S-2X00x8**	17.2R1	fxp0	ixlv0 ixlv1 em0
REMX2K-X8-128G	**RE-MX200X8-128G**	18.1R1	fxp0	ixlv0 ixlv1

MX2020 Supported Routing Engines

Table 32 on page 60 lists the Routing Engines supported by MX2020 routers.

Table 32: MX2020 Supported Routing Engines

Model Number	Name in CLI Output	First Supported 64-bit Junos OS Release	Management Ethernet Interface	Internal Ethernet Interface
RE-MX2000-1800X4	**RE-S-1800x4**	12.3R2	fxp0	em0 em1
REMX2K-1800-32G-S	**RE-S-1800x4**	• 12.3R4 • 13.2R1	fxp0	em0 em1
REMX2K-X8-64G	**RE-S-2X00x8**	• 15.1F5-S1 • 16.1R2 • 16.2R1	fxp0	ixlv0 ixlv1 em0
REMX2K-X8-64G-LT	**RE-S-2X00x8**	17.2R1	fxp0	ixlv0 ixlv1 em0

Copyright © 2019, Juniper Networks, Inc.

Table 32: MX2020 Supported Routing Engines (continued)

Model Number	Name in CLI Output	First Supported 64-bit Junos OS Release	Management Ethernet Interface	Internal Ethernet Interface
REMX2K-X8-128G	**RE-MX200X8-128G**	18.1R1	fxp0	ixlv0 ixlv1 em0

MX10003 Routing Engines

Table 33 on page 61 lists the Routing Engines supported by MX10003 routers.

Table 33: MX10003 Supported Routing Engines

Model Number	Name in CLI Output	First Supported 64-bit Junos OS Release	Management Ethernet Interface	Internal Ethernet Interface
JNP10003-RE1	**RE-S-1600x8**	17.3R1	fxp0	em3 em4
JNP10003-RE1-LT	**RE-S-1600x8**	18.1R1	fxp0	em3 em4

MX10008 Routing Engines

Table 34 on page 61 lists the Routing Engines supported on the MX10008 router.

Table 34: MX10008 Routing Engines

Model Number	Name in CLI Output	First Supported Junos OS Release	Management Ethernet Interface	Internal Ethernet Interface
JNP10K-RE1	**RE X10**	18.2R1	em0	bme0 bme1

PTX1000 Routing Engines

Table 35 on page 62 lists the Routing Engine supported on the PTX1000.

NOTE: **The PTX1000 supports 64-bit Junos OS only.**

Table 35: PTX1000 Routing Engines

Model Number	Name in CLI Output	First Supported Junos OS Release	Management Ethernet Interface	Internal Ethernet Interface
Built-in Routing Engine	**RE-PTX1000**	• 16.1X65-D30 • 17.2R1	em0	bme0 em1

PTX3000 Routing Engines

Table 36 on page 62 lists the Routing Engines supported on the PTX3000.

NOTE: The PTX3000 supports 64-bit Junos OS only.

Table 36: PTX3000 Routing Engines

Model Number	Name in CLI Output	First Supported Junos OS Release	Management Ethernet Interface	Internal Ethernet Interface
RE-DUO-C2600-16G	**RE-DUO-2600**	13.2R2	em0	ixgbe0 ixgbe1
RCB-PTX-X6-32G	**RE-PTX-2X00x6**	16.1R4 17.1R1 This Routing Engine does not support Junos OS Release 16.2.	em0	ixlv0 ixlv1

PTX5000 Routing Engines

Table 37 on page 63 lists the Routing Engines supported on the PTX5000.

NOTE:

- PTX5000 supports 64-bit Junos OS only.
- The PTX5000 router supports two midplanes. The midplane identified as **Midplane-8S** in the CLI output is supported in Junos OS releases, 12.1X48, 12.3, and 13.2. The enhanced midplane, identified as **Midplane-8SeP** is supported from Junos OS release 14.1 onwards.

  The RE-DUO-2600 routing engine with Junos OS 13.2 or earlier is not supported on the PTX5000BASE2 midplane.

Copyright © 2019, Juniper Networks, Inc.

Table 37: PTX5000 Routing Engines

Model Number	Name in CLI Output	First Supported Junos OS Release	Management Ethernet Interface	Internal Ethernet Interface
RE-DUO-C2600-16G	**RE-DUO-2600**	12.1X48 12.3 13.2 NOTE: The PTX5000 does not support Junos OS Releases 12.1, 12.2, or 13.1.	em0	ixgbe0 ixgbe1
RE-PTX-X8-64G	**RE-PTX-2X00x8**	15.1F4 16.1R1	em0	ixlv0 ixlv1 em1
RE-PTX-X8-128G	**RE-PTX-2X00x8-128G**	18.1R1	em0	ixlv0 ixlv1 em1

PTX10008 and PTX10016 Routing Engines

Table 38 on page 63 lists the Routing Engines supported on the PTX10008 and PTX10016 routers.

Table 38: PTX10008 and PTX10016 Routing Engines

Model Number	Name in CLI Output	First Supported Junos OS Release	Management Ethernet Interface	Internal Ethernet Interface
JNP10K-RE0	**RE-PTX-2X00x4**	17.2R1	em0, em1	bme0 bme1
JNP10K-RE1 (on PTX10008)	**RE X10**	18.2R1	em0	bme0 bme1

T320 Routing Engines

Table 39 on page 64 lists the Routing Engines supported by the T320 router.

Copyright © 2019, Juniper Networks, Inc.

Table 39: T320 Routing Engines

Model Number	Name in CLI Output	First Supported 32-bit Junos OS Release	Management Ethernet Interface	Internal Ethernet Interface
RE-600-2048 (EOL details: TSB14373)	**RE-3.0** or **RE-3.0 (RE-600)**	5.3	fxp0	fxp1 fxp2
RE-1600-2048 (EOL details: TSB14374	**RE-4.0**	6.2	fxp0	fxp1 fxp2
RE-A-2000-4096	**RE-A-2000**	8.1	fxp0	fxp1 fxp2

The T320 router supports the CB-T control board.

T640 Routing Engines

Table 40 on page 64 lists the Routing Engines supported by the T640 router.

Table 40: T640 Routing Engines

Model Number	Name in CLI Output	First Supported 32-bit Junos OS Release	First Supported 64-bit Junos OS Release	Management Ethernet Interface	Internal Ethernet Interface
RE-600-2048 (EOL details: TSB14373)	**RE-3.0** or **RE-3.0 (RE-600)**	5.3	–	fxp0	fxp1 fxp2
RE-1600-2048 (EOL details: TSB14374	**RE-4.0**	6.2	–	fxp0	fxp1 fxp2
RE-A-2000-4096	**RE-A-2000**	8.1	–	fxp0	em0 bcm0
RE-DUO-C1800-8G	**RE-DUO-1800**	32-bit Junos OS on a standalone T640 router: 11.2 32-bit Junos OS on a T640 router in a routing matrix: 11.4R9	64-bit Junos OS on a standalone T640 router: 11.3 64-bit Junos OS on a T640 router in a routing matrix: 11.4R9	em0	bcm0 em1
RE-DUO-C1800-16G	**RE-DUO-1800**	32-bit Junos OS on a standalone T640 router: 11.4R2 32-bit Junos OS on a T640 router in a routing matrix: 11.4R9	64-bit Junos OS on a standalone T640 router: 11.4R2 64-bit Junos OS on a T640 router in a routing matrix: 11.4R9	em0	bcm0 em1

Copyright © 2019, Juniper Networks, Inc.

The T640 standalone router supports CB-T control board and CB-LCC in a T640 routing matrix.

T1600 Routing Engines

Table 41 on page 65 lists the Routing Engines supported by the T1600 router.

NOTE: (Two RE-DUO-C1800-8G or two RE-DUO-C1800-16G are required to connect to a Routing Matrix)

Table 41: T1600 Routing Engines

Model Number	Name in CLI Output	First Supported 32-bit Junos OS Release	First Supported 64-bit Junos OS Release	Management Ethernet Interface	Internal Ethernet Interface
RE-600-2048 (EOL details: TSB14373)	**RE-3.0** or **RE-3.0 (RE-600)**	8.5	–	fxp0	fxp1 fxp2
RE-1600-2048 (EOL details: TSB14374	**RE-4.0 (RE-1600)**	8.5	–	fxp0	fxp1 fxp2
RE-A-2000-4096	**RE-A-2000**	8.5	–	fxp0	em0 bcm0
RE-DUO-C1800-8G	**RE-TXP-LCC** or **RE-DUO-1800**	32-bit Junos OS on a T1600 router in a routing matrix: 9.6 NOTE: Junos OS Releases 9.6 through 10.4 support RE-DUO-C1800-8G only during upgrade to a line-card chassis (LCC) in a routing matrix. 32-bit Junos OS on a standalone T1600 router: 11.1	64-bit Junos OS on a T1600 router in a routing matrix: 9.6 64-bit Junos OS on a standalone T1600 router: 11.1	em0	bcm0 em1
RE-DUO-C1800-16G	**RE-DUO-1800**	32-bit Junos OS on a standalone T1600 router: 11.4R2 32-bit Junos OS on a T1600 router in a routing matrix: 11.4R2	64-bit Junos OS on a standalone T1600 router: 11.4R2 64-bit Junos OS on a T1600 router in a routing matrix: 11.4R2	em0	bcm0 em1

T4000 Routing Engines

Table 42 on page 66 lists the Routing Engines supported by the T4000 router.

NOTE: The T4000 router supports 64-bit Junos OS only.

Table 42: T4000 Routing Engines

Model Number	Name in CLI Output	First Supported 64-bit Junos OS Release	Management Ethernet Interface	Internal Ethernet Interface
RE-DUO-C1800-8G	**RE-DUO-1800**	Standalone T4000 router: 12.1 T4000 router in a routing matrix: 13.1	em0	bcm0 em1
RE-DUO-C1800-16G	**RE-DUO-1800**	Standalone T4000 router: 12.1R2 T4000 router in a routing matrix: 13.1	em0	bcm0 em1

The T4000 router supports the CB-LCC control board.

TX Matrix Routing Engines

Table 43 on page 66 lists the Routing Engines supported by the TX Matrix router.

Table 43: TX Matrix Routing Engines

Model Number	Name in CLI Output	First Supported 32-bit Junos OS Release	First Supported 64-bit Junos OS Release	Management Ethernet Interface	Internal Ethernet Interface
RE-600-2048 (EOL details: TSB14373)	**RE-3.0** or **RE-3.0 (RE-600)**	7.0	–	fxp0	fxp1 fxp2
RE-1600-2048 (EOL details: TSB14374	**RE-4.0 (RE-1600)**	7.0	–	fxp0	fxp1 fxp2
RE-A-2000-4096	**RE-A-2000**	8.5	–	fxp0	em0 bcm0
RE-DUO-C1800-8G	**RE-DUO-1800**	11.4R9	11.4R9	em0	bcm0 em1
RE-DUO-C1800-16G	**RE-DUO-1800**	11.4R9	11.4R9	em0	bcm0 em1

The TXP router supports two control boards, CB-TX and CB-LCC. The CB-LCC is required for both RE-DUO-C1800-8G and RE-DUO-C1800-16G Routing Engines.

Copyright © 2019, Juniper Networks, Inc.

TX Matrix Plus Routing Engines

Table 44 on page 67 lists the Routing Engines supported by the TX Matrix Plus router.

Table 44: TX Matrix Plus Routing Engines

Model Number	Name in CLI Output	First Supported 32-bit Junos OS Release	First Supported 64-bit Junos OS Release	Management Ethernet Interface	Internal Ethernet Interface
RE-DUO-C2600-16G	**RE-TXP-SFC** or **RE-DUO-2600**	32-bit Junos OS: 9.6	64-bit Junos OS: 11.4	em0	ixgbe0 ixgbe1

The TX Matrix Plus router supports the CB-TXP control board.

TX Matrix Plus (with 3D SIBs) Routing Engines

Table 45 on page 67 lists the Routing Engines supported by the TX Matrix Plus router with 3D SIBs.

Table 45: Routing Engines on TX Matrix Plus with 3D SIBs

Model Number	Name in CLI Output	First Supported 32-bit Junos OS Release	First Supported 64-bit Junos OS Release	Management Ethernet Interface	Internal Ethernet Interface
RE-DUO-C2600-16G	**RE-TXP-SFC** or **RE-DUO-2600**	-	64-bit Junos OS: 11.4	em0	ixgbe0 ixgbe1

Related Documentation

- *Understanding Internal Ethernet Interfaces*
- *Understanding Management Ethernet Interfaces*

T640 LCC-CB Description

Each LCC-CB consists of the following components:

- 100-MB Ethernet switch for intermodule communication.
- PCI bus to the Routing Engines.
- Switch processor mezzanine board (SPMB).

Figure 23 on page 67 shows the LCC-CB.

Figure 23: LCC-CB

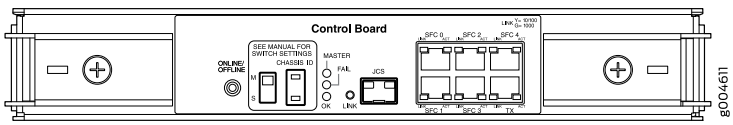

The following components are located on the LCC-CB faceplate:

- Three LEDs labeled **MASTER**, **FAIL**, and **OK** indicate its status.
- The online/offline button.
- Two configuration switches—**M/S** and **CHASSIS ID**—that must be set to **S** and **0** for standalone T640 routers.
- RJ-45 ports labeled **SFC0** through **SFC5**, which are not currently supported on the T640 router. Two LEDs for each port—labeled **LINK** and **ACT**— are also not supported.
- One JCS port, which is not supported on the T640 router. The **LINK** LED indicates the status of the port.

Related Documentation

- T640 Hardware Component Overview on page 13
- T640 Host Subsystem Description on page 35
- *T640 Control Boards Description*
- T640 LCC-CB LEDs on page 68

T640 LCC-CB LEDs

Status LEDs and port LEDs are located on the faceplate of the LCC-CB (see Figure 24 on page 68).

Figure 24: LCC-CB LEDs

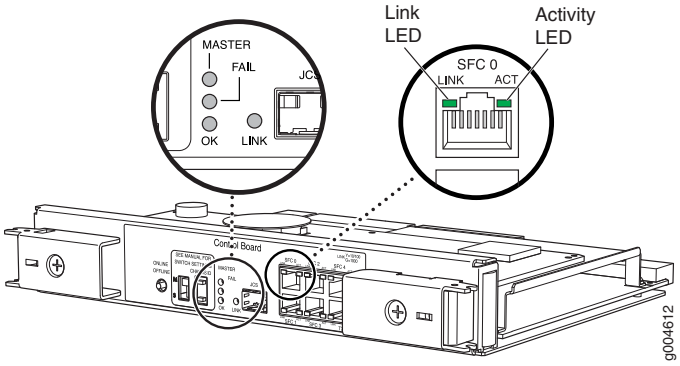

The LEDs located in the middle of the LCC-CB indicate its status. Table 46 on page 68 describes the functions of the LCC-CB LEDs.

Table 46: LCC-CB LEDs

Label	Color	State	Description
MASTER	Blue	On steadily	LCC-CB is functioning as the master.
	–	Off	LCC-CB is functioning as the backup.

Copyright © 2019, Juniper Networks, Inc.

Table 46: LCC-CB LEDs (continued)

Label	Color	State	Description
FAIL	Yellow	On steadily	LCC-CB has failed.
	–	Off	No faults have been detected on the LCC-CB.
OK	Green	On steadily	LCC-CB is online and is functioning normally.
		Blinking	LCC-CB is powering up, but not online.
	–	Off	LCC-CB is offline.

The LEDs located next to each port indicate its status. The ports and the port LEDs are not currently supported for the T640 router.

Related Documentation

- T640 Hardware Component Overview on page 13
- T640 Host Subsystem Description on page 35
- *T640 Control Boards Description*
- T640 LCC-CB Description on page 67
- Troubleshooting the T640 Host Subsystem on page 494
- Troubleshooting the T640 Control Board on page 495

T640 Standard Control Boards Description

Figure 25 on page 69 shows the standard control board.

Figure 25: T640 Standard Control Board

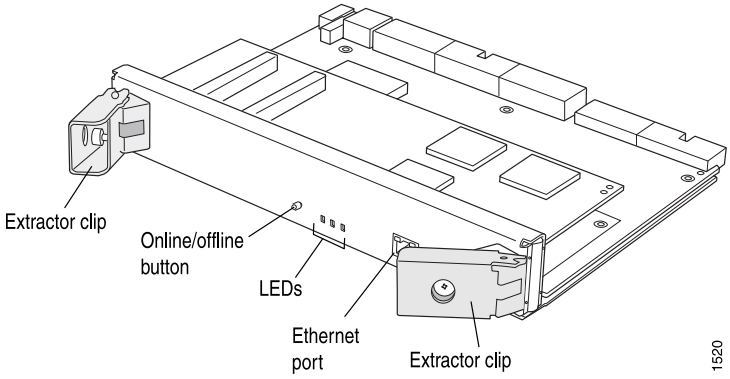

Related Documentation

- T640 Hardware Component Overview on page 13
- T640 Host Subsystem Description on page 35
- T640 Routing Engine Description on page 36

- T640 Standard Control Boards LEDs on page 70

T640 Standard Control Boards LEDs

Three LEDs, located on the standard control board faceplate, indicate the status of the control board.. Table 47 on page 70 describes the functions of the standard control board LEDs.

Table 47: Standard Control Board LEDs

Label	Color	State	Description
MASTER	Blue	On steadily	Control board is functioning as the master.
FAIL	Yellow	On steadily	Control board has failed.
OK	Green	On steadily	Control board is online and is functioning normally.
		Blinking	Control board is powering up, but not online.

Related Documentation

- T640 Chassis Description on page 15
- Replacing a T640 Standard Control Board or T-CB on page 325
- Maintaining the T640 Control Boards on page 469

T640 T Series Control Boards (T-CBs) Description

Each T-CB consists of the following components:

- 100-MB Ethernet switch for intermodule communication.
- PCI bus to the Routing Engines.
- Processor subsystem (SPMB).

Figure 26 on page 71 shows the T-CB.

Copyright © 2019, Juniper Networks, Inc.

Figure 26: T-CB

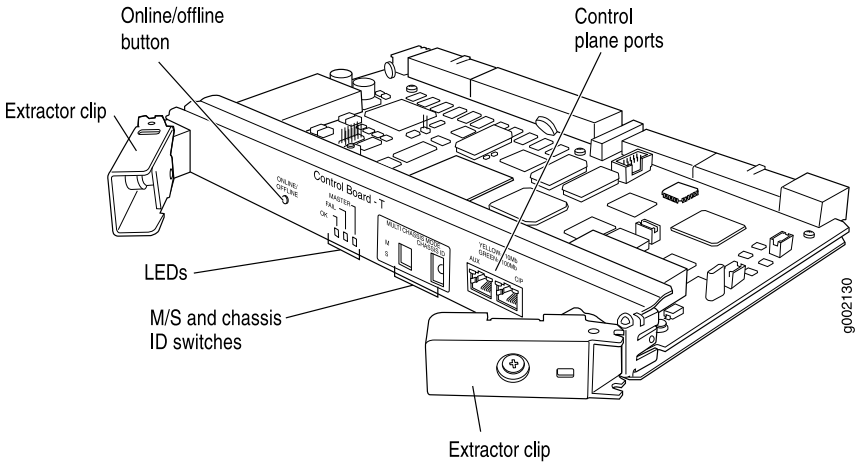

The following components are located on the T-CB faceplate:

- The **MASTER**, **FAIL**, and **OK** LEDs, which indicate the status of the T-CB.
- Online/offline button.

  NOTE: When the adjacent Routing Engine is online, the online/offline button on the T-CB faceplate is nonfunctional. For more information, see "Taking the T640 Host Subsystem Offline" on page 319.

- Two RJ-45 ports labeled **AUX** and **CIP** on the T-CB faceplate.

  For T640 routers connected to a TX Matrix platform, only the **CIP** port is used. For more information, see the *TX Matrix Router Hardware Guide*.

- The **M/S** and **CHASSIS ID** configuration switches.
  - For a standalone T640 router, the **M/S** and **CHASSIS ID** configuration switches must always be set to **S** and **0**.
  - For T640 routers connected to a TX Matrix platform, the **M/S** and **CHASSIS ID** configuration switches must always be set to **M** and the chassis identifier (ID) of the router. In this case, both T-CBs must have the same chassis ID. For more information, see the *TX Matrix Router Hardware Guide*.

Related Documentation

- T640 Hardware Component Overview on page 13
- T640 Host Subsystem Description on page 35
- *T640 Control Boards Description*
- T640 T Series Control Boards (T-CBs) LEDs on page 72

T640 T Series Control Boards (T-CBs) LEDs

Three LEDs, located on the T-CB faceplate, indicate the status of the T-CB. Table 48 on page 72 describes the functions of the T-CB LEDs.

Table 48: T-CB LEDs

Label	Color	State	Description
MASTER	Blue	On steadily	T-CB is functioning as the master.
FAIL	Yellow	On steadily	T-CB has failed.
OK	Green	On steadily	T-CB is online and is functioning normally.
		Blinking	T-CB is powering up, but not online.

Related Documentation

- T640 Host Subsystem Description on page 35
- *T640 Control Boards Description*
- T640 T Series Control Boards (T-CBs) Description on page 70
- Troubleshooting the T640 Host Subsystem on page 494
- Troubleshooting the T640 Control Board on page 495

Copyright © 2019, Juniper Networks, Inc.

CHAPTER 6

Line Card Components and Description

- T640 FPC Description on page 73
- T640 FPCs Supported on page 83
- T640 PIC Description on page 85
- T640 PICs Supported on page 86
- T640 End-of-Life PICs Supported on page 93
- T640 PIC/FPC Compatibility on page 95

T640 FPC Description

Up to eight Flexible PIC Concentrators (FPCs) install vertically in the front of the T640 Core Router (see Figure 27 on page 74). The FPC slots are numbered left to right from **FPC0** to **FPC7**. An FPC can be installed into any FPC slot on the router, regardless of which PICs it contains.

If a slot is not occupied by an FPC, an FPC blank panel must be installed to shield the empty slot and to allow cooling air to circulate properly through the router.

Each FPC contains one or two Packet Forwarding Engines. The Packet Forwarding Engines receive incoming packets from the PICs installed on the FPC and forward them through the switch planes to the appropriate destination port. Each FPC contains data memory that is managed by the Queuing and Memory Interface ASICs.

FPCs are hot-removable and hot-insertable, as described in "T640 Field-Replaceable Units" on page 269. When you install an FPC into a functioning router, the Routing Engine downloads the FPC software, the FPC runs its diagnostics, and the PICs housed on the FPC are enabled. Forwarding continues uninterrupted during this process. For FPC replacement instructions, see "Replacing a T640 FPC" on page 345.

Each FPC consists of the following components:

- FPC card carrier.
- One or two Packet Forwarding Engines, consisting of Layer 2/Layer 3 Packet Processing ASICs, Switch Interface ASICs, T-series Internet Processor ASICs, and a Memory Mezzanine Board (MMB) which includes the Queuing and Memory Interface ASICs. Each Type 1, Type 2, and Type 4 FPC has one Packet Forwarding Engine, and each Type 3 FPC has two Packet Forwarding Engines.

Copyright © 2019, Juniper Networks, Inc.

- Processor Mezzanine Board (PMB), which includes a 300-MHz CPU, system controller, 256 MB of SDRAM, and two Fast Ethernet interfaces.
- Two LEDs, located on the craft interface above the FPC, that display the status of the FPC. For more information about the FPC LEDs, see "T640 Craft Interface FPC LEDs and Online/Offline Buttons" on page 24.
- FPC online/offline button, located on the craft interface above the FPC.

Figure 27: FPC Installed in a T640 Chassis

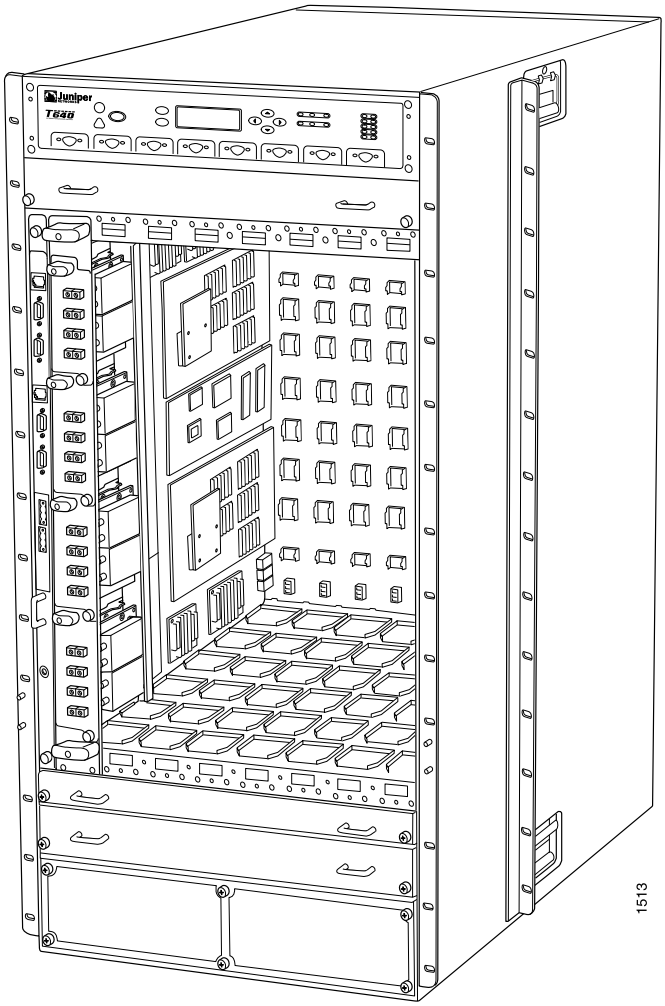

FPC Terminology

Regardless of whether you are holding an FPC vertically or horizontally, this document uses the same terms for all four edges of the FPC (see Figure 28 on page 75):

- Faceplate—Edge of the FPC that has slots into which you insert the PICs
- Connector edge—Edge opposite the faceplate; this edge has the connectors that attach to the midplane

Copyright © 2019, Juniper Networks, Inc.

- Top edge—Edge at the top of the FPC when it is vertical
- Bottom edge—Edge at the bottom of the FPC when it is vertical

Figure 28: FPC Edges

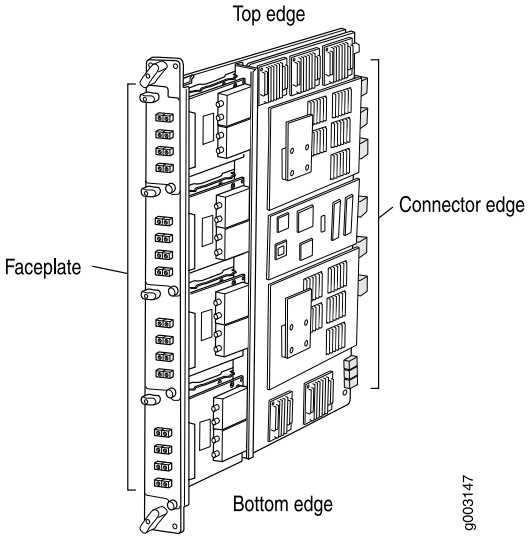

Identifying T640 FPCs

Check the label on the faceplate to identify the FPC. For FPCs without a label on the faceplate, check the location of a PIC's offline button and how the PIC is secured to the FPC. See Table 49 on page 75.

Table 49: Identifying the FPCs Supported by the T640 Router

FPC	Label on the FPC Faceplate	Location of PIC Offline Button	Method of Securing the PIC to the FPC
Enhanced FPC1	**E FPC1**	Slightly beneath the faceplate of the PIC	Two captive screws
Enhanced II FPC1	**E-II FPC1**	Slightly beneath the faceplate of the PIC	Two captive screws
Enhanced Scaling FPC1	**T640-FPC1-ES**	Slightly beneath the faceplate of the PIC	Two captive screws
FPC2	None	Inside an opening directly on the faceplate of each PIC	Two captive screws
Enhanced FPC2	**E FPC2**	Inside an opening directly on the faceplate of each PIC	Two captive screws
Enhanced II FPC2	**E-II FPC2**	Inside an opening directly on the faceplate of each PIC	Two captive screws

Copyright © 2019, Juniper Networks, Inc.

Table 49: Identifying the FPCs Supported by the T640 Router (continued)

FPC	Label on the FPC Faceplate	Location of PIC Offline Button	Method of Securing the PIC to the FPC
Enhanced Scaling FPC2	**T640-FPC2-ES**	Inside an opening directly on the faceplate of each PIC	Two captive screws
FPC3	None	Inside an opening directly on the faceplate of each PIC	Plastic ejector handle at the top of the PIC faceplate; captive screw at the bottom of the PIC faceplate
Enhanced FPC3	**E FPC3**	Inside an opening directly on the faceplate of each PIC	Two plastic ejector handles at the top and bottom of the PIC faceplate
Enhanced II FPC3	**E-11 FPC3**	Inside an opening directly on the faceplate of each PIC	Two plastic ejector handles at the top and bottom of the PIC faceplate
Enhanced Scaling FPC3	**T640-FPC3-ES**	Inside an opening directly on the faceplate of each PIC	Two plastic ejector handles at the top and bottom of the PIC faceplate
T640 Enhanced Scaling FPC4	**FPC4**	Inside an opening directly on the faceplate of each PIC	Two plastic ejector handles at the top and bottom of the PIC faceplate
T640 Enhanced Scaling FPC4-1P	**T640-FPC4–1P-ES**	Inside an opening directly on the faceplate of each PIC	Two plastic ejector handles at the top and bottom of the PIC faceplate

Copyright © 2019, Juniper Networks, Inc.

The T640 router supports the Enhanced Scaling FPC1, as shown in Figure 29 on page 77.

Figure 29: Enhanced Scaling FPC1 Supported by the T640 Router

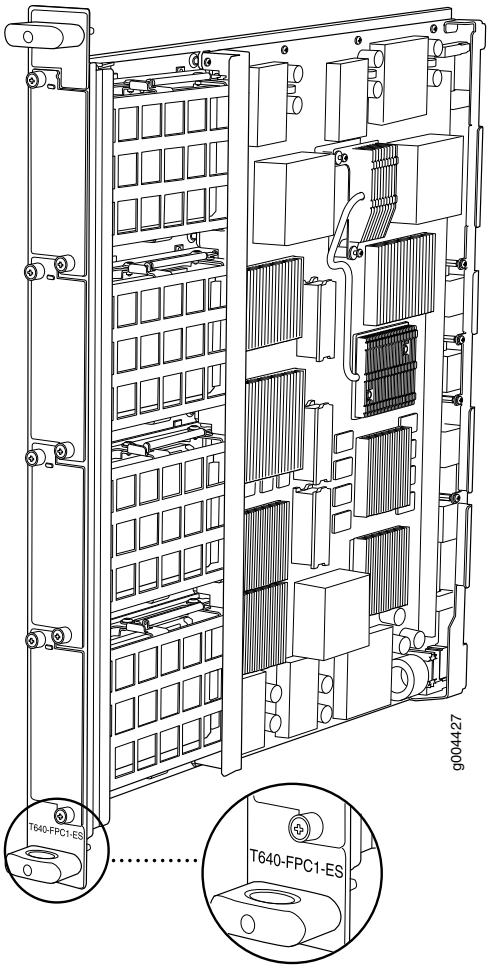

The T640 router supports the standard FPC2 and FPC3, as shown in Figure 30 on page 78.

Copyright © 2019, Juniper Networks, Inc.

Figure 30: Standard FPC2 and FPC3 Supported by the T640 Router

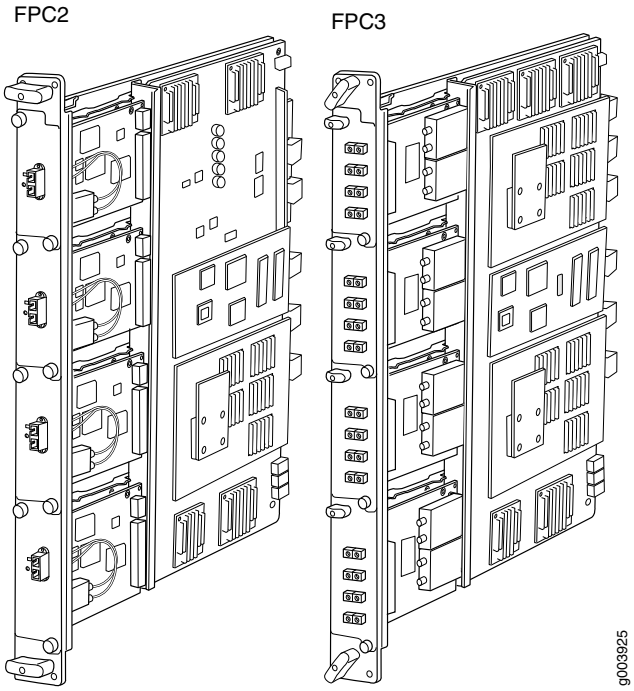

Copyright © 2019, Juniper Networks, Inc.

The T640 router supports the Enhanced II FPC1, FPC2 and FPC3, as shown in Figure 31 on page 79.

Figure 31: Enhanced II FPC1, FPC2, and FPC3 Supported by the T640 Router

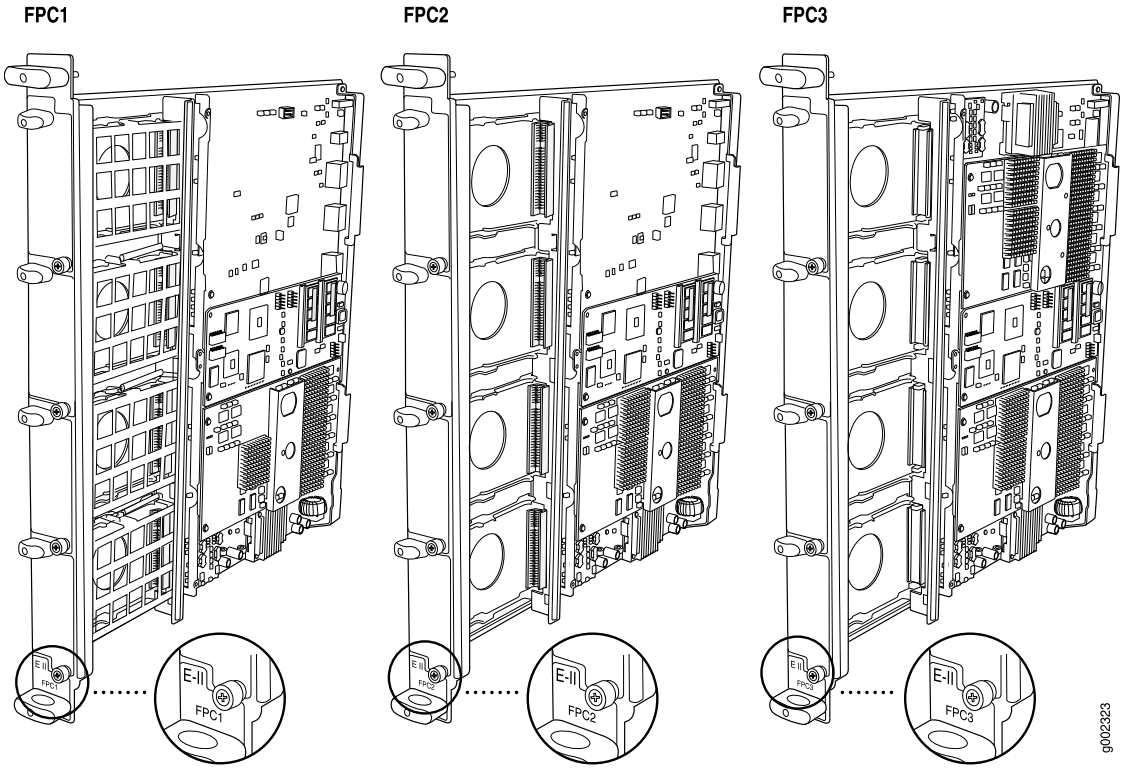

The T640 router supports the Enhanced Scaling FPC2, as shown in Figure 32 on page 80.

Figure 32: Enhanced Scaling FPC2 Supported by the T640 Router

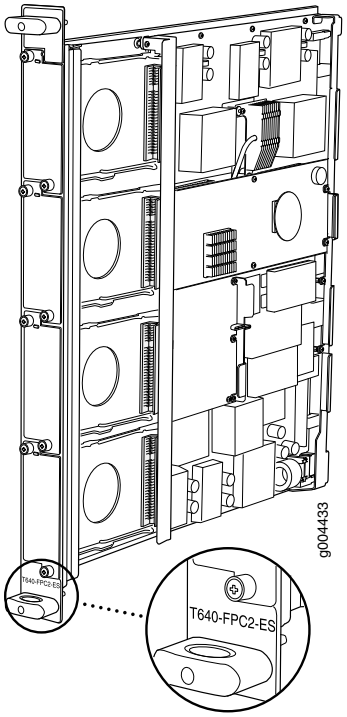

The T640 router supports the Enhanced Scaling FPC3, as shown in Figure 33 on page 81.

Copyright © 2019, Juniper Networks, Inc.

Figure 33: Enhanced Scaling FPC3 Supported by the T640 Router

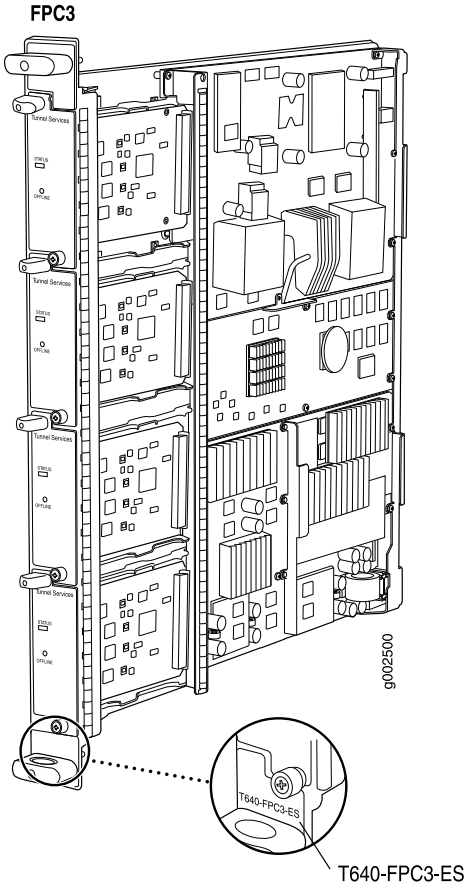

The T640 router supports the Enhanced Scaling FPC4, as shown in Figure 34 on page 82.

Figure 34: Enhanced Scaling FPC4 Supported by the T640 Router

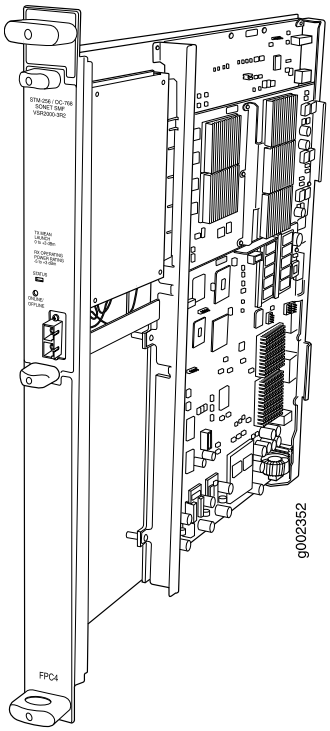

Copyright © 2019, Juniper Networks, Inc.

The T640 router supports the T640 Enhanced Scaling FPC4-1P, as shown in Figure 35 on page 83.

Figure 35: T640 Enhanced Scaling FPC4-1P Supported by the T640 Router

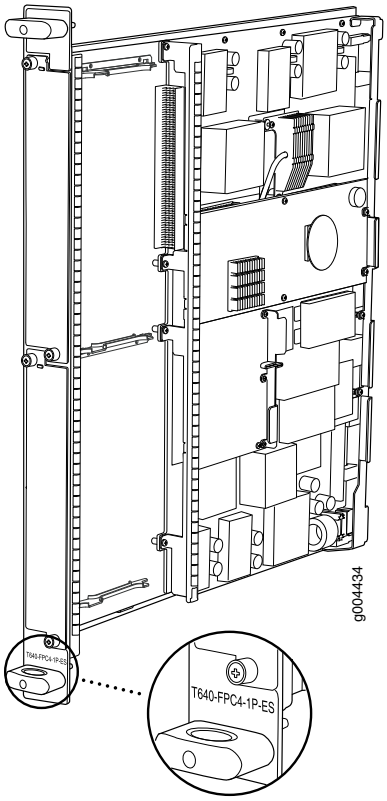

Related Documentation

- T640 Hardware Component Overview on page 13
- T640 FPCs Supported on page 83
- Maintaining T640 FPCs on page 470
- Troubleshooting the T640 FPCs on page 496

T640 FPCs Supported

Table 50 on page 84 lists the FPCs for the T640 routers. You can install any combination of the FPCs currently supported. First Junos OS Release Supported indicates the first release that the FPC is supported in the T1600 router.

NOTE: End of life (EOL) indicates that the product has been removed from the price list and is no longer available for purchase. End of support (EOS) indicates that no new support contracts are available on these products and the last contract will expire on the EOS date associated with each product. For more information about EOS or EOL products, see the product support notification (PSN) hardware end-of-life announcements.

Table 50: FPCs Supported by the T640 Router

FPC Type	FPC Name	FPC Model Number	Maximum Number of PICs	Maximum Throughput per FPC	First Junos OS Release
1	Enhanced FPC1 EOL PSN-2007-12-035	T640-FPC1-E	4	4 Gbps	6.3
	Enhanced II FPC1 EOL PSN-2010-08-920	T640-FPC1-E2	4	4 Gbps	7.4
	Enhanced Scaling FPC1	T640-FPC1-ES	4	4 Gbps	9.4
2	FPC2	T640-FPC2	4	16 Gbps	5.3
	Enhanced FPC2 EOL PSN-2007-12-035	T640-FPC2-E	4	16 Gbps	6.3
	Enhanced II FPC2 EOL PSN-2010-08-920	T640-FPC2-E2	4	16 Gbps	7.4
	Enhanced Scaling FPC2	T640-FPC2-ES	4	16 Gbps	9.5

Copyright © 2019, Juniper Networks, Inc.

Table 50: FPCs Supported by the T640 Router (continued)

FPC Type	FPC Name	FPC Model Number	Maximum Number of PICs	Maximum Throughput per FPC	First Junos OS Release
3	FPC3	T640-FPC3	4	40 Gbps	5.3
	Enhanced FPC3 EOL PSN-2007-12-035	T640-FPC3-E	4	40 Gbps	6.3
	Enhanced II FPC3 EOL PSN-2010-08-920	T640-FPC3-E2	4	40 Gbps	7.4
	Enhanced Scaling FPC3	T640-FPC3-ES	4	40 Gbps	9.0
4	Enhanced Scaling FPC4 EOL PSN-2010-07-878	T640-FPC4-ES	1	50 Gbps	7.5
	Enhanced Scaling FPC4-1P	T640-FPC4-1P-ES	1	50 Gbps	9.5

Related Documentation

- T640 FPC Description on page 73

T640 PIC Description

PICs provide the physical connection to various network media types, receiving incoming packets from the network and transmitting outgoing packets to the network. During this process, each PIC performs framing and line-speed signaling for its media type. Before transmitting outgoing data packets, the PICs encapsulate the packets received from the FPCs. Each PIC is equipped with an ASIC that performs control functions specific to the media type of that PIC.

PICs are hot-removable and hot-insertable. You can install up to four PICs in the slots of each Type 1, 2, and 3 FPC, and one PIC in a Type 4 FPC. Type 1 and Type 2 PICs have captive screws at their upper and lower corners. Type 3 PICs have an upper ejector handle and a lower captive screw. Type 4 PICs have an upper ejector handle and a lower ejector handle.

The router supports various PICs, including ATM, Channelized, Gigabit Ethernet, IP Services, and SONET/SDH interfaces. Blank PICs resemble other PICs but do not provide any

physical connection or activity. When a slot is not occupied by a PIC, you must insert a blank PIC to fill the empty slot and ensure proper cooling of the system.

Related Documentation

- T640 Hardware Component Overview on page 13
- T640 PICs Supported on page 86
- T640 End-of-Life PICs Supported on page 93

T640 PICs Supported

Table 51 on page 86 lists the PICs supported by the T640 router. The PICs are listed alphabetically by PIC family.

NOTE: The T640 router is now end-of-life. See the JTAC support bulletin TSB16819 for additional information about the PICs and other associated FRUs that moved to end-of-life with the router. The "T640 End-of-Life PICs Supported" on page 93 topic lists PICs that moved to end-of-life before the T640 router itself moved to end-of-life.

Table 51: PICs Supported in the T640 Router

PIC Family and Type	Ports	Model Number	Connector	First Junos OS Release Support
ATM2 IQ				
ATM2 E3 IQ PIC (T640 Router)	4	PB-2E3-ATM2	Coaxial: • 10 ft (3.05 m) posilock SMB to BNC cable (provided) • Four pairs of Rx and Tx coaxial cables	7.4
ATM2 OC3/STM1 IQ PIC (T640 Router)	2	PB-2OC3-ATM2-MM PB-2OC3-ATM2-SMIR	• Optical: SC/PC	7.6
ATM2 OC12/STM4 IQ PICs (T640 Router)				
• ATM2 OC12/STM4 IQ PIC	2	PB-2OC12-ATM2-MM PB-2OC12-ATM2-SMIR	• Optical: SC/PC	5.5
• ATM2 OC12/STM4 IQ PIC	1	PB-1OC12-ATM2-MM PB-1OC12-ATM2-SMIR	• Optical: SC/PC	8.0
ATM2 OC48/STM16 IQ PIC with SFP (T640 Router)	1	PB-1OC48-ATM2-SFP	• Optical: LC/PC	7.3

Copyright © 2019, Juniper Networks, Inc.

Table 51: PICs Supported in the T640 Router (continued)

PIC Family and Type	Ports	Model Number	Connector	First Junos OS Release Support
Channelized IQ				
Channelized DS3 IQ PIC (T640 Router)	4	PB-4CHDS3-QPP	Coaxial • Standard DS3 BNC coaxial cable interfaces	8.0
Channelized OC3 IQ PIC (T640 Router)	1	PB-1CHOC3-SMIR-QPP	• Optical: SC/PC	7.6
Channelized STM1 IQ PIC (T640 Router)	1	PB-1CHSTM1-SMIR-QPP	• Optical: SC/PC	7.5
Channelized Enhanced IQ (IQE)				
Channelized DS3/E3 Enhanced IQ (IQE) PIC (T640 Router)	4	PB-4CHDS3-E3-IQE-BNC	Coaxial • Standard DS3 BNC coaxial cable interfaces	9.3
Channelized E1/T1 Enhanced IQ (IQE) PIC (T640 Router)	10	PB-10CHE1-T1-IQE-RJ48	• 120-ohm RJ-48C connector (female)	9.5
Channelized OC3/STM1 Enhanced IQ (IQE) PIC with SFP (T640 Router)	2	PB-2CHOC3-STM1-IQE-SFP	• Optical: LC/PC	9.3
Channelized OC12/STM4 Enhanced IQ (IQE) PICs with SFP (T640 Router)				
• Channelized OC12/STM4 Enhanced IQ (IQE) PIC with SFP	1	PB-1CHOC12-STM4-IQE-SFP	• Optical: LC/PC	9.3
• Channelized OC12/STM4 Enhanced IQ (IQE) PIC with SFP	4	PB-4CHOC12-STM4-IQE-SFP	• Optical: LC/PC	9.4
• Channelized OC12/STM4 Enhanced IQ (IQE) PIC with SFP	4	PC-4CHOC12-STM4-IQE-SFP	• Optical: LC/PC	10.0R2
Channelized OC48/STM16 Enhanced IQ (IQE) PIC with SFP (T640 Router)	1	PB-1CHOC48-STM16-IQE-SFP	• Optical: LC/PC	9.4
DS3/E3 IQ				
DS3/E3 Enhanced IQ (IQE) PIC (T640 Router)	4	PB-4DS3-E3-IQC-BNC	Coaxial • Standard DS3 BNC coaxial cable interfaces	9.3R2
E3 IQ PIC (T640 Router)	4	PB-4E3-QPP	Coaxial • Standard DS3 BNC coaxial cable interfaces	6.3 (7.3 TX Matrix router)

Copyright © 2019, Juniper Networks, Inc.

Table 51: PICs Supported in the T640 Router (continued)

PIC Family and Type	Ports	Model Number	Connector	First Junos OS Release Support
Fast Ethernet and Gigabit Ethernet				
Fast Ethernet PIC (T640 Router)	4	PB-4FE-TX	• RJ-45 • Two-pair, Category 5 unshielded twisted-pair • Pinout: MDI noncrossover	6.3
Gigabit Ethernet PICs with SFP (T640 Router)				

• Gigabit Ethernet PIC with SFP	1	PB-1GE-SFP	• Optical: LC/PC
			• Copper: RJ-45
			  • Four-pair, Category 5 shielded twisted-pair connectivity
			  • Pinout: MDI crossover
				8.0

• Gigabit Ethernet PIC with SFP	2	PB-2GE-SFP	• Optical: LC/PC
			• Copper: RJ-45
			  • Four-pair, Category 5 shielded twisted-pair connectivity
			  • Pinout: MDI crossover
				6.4

• Gigabit Ethernet PIC with SFP	4	PB-4GE-SFP	• Optical: LC/PC
			• Copper: RJ-45
			  • Four-pair, Category 5 shielded twisted-pair connectivity
			  • Pinout: MDI crossover
				7.0

• Gigabit Ethernet PIC with SFP	10	PC-10GE-SFP	• Optical: LC/PC
			• Copper: RJ-45
			  • Four-pair, Category 5 shielded twisted-pair connectivity
			  • Pinout: MDI crossover
				5.5

Copyright © 2019, Juniper Networks, Inc.

Table 51: PICs Supported in the T640 Router (continued)

PIC Family and Type	Ports	Model Number	Connector	First Junos OS Release Support
Gigabit Ethernet IQ				
Gigabit Ethernet IQ PICs with SFP (T640 Router)				

• Gigabit Ethernet IQ PIC with SFP	1	PB-1GE-SFP-QPP	• Optical: LC/PC
			• Copper: RJ-45
			  • Four-pair, Category 5 shielded twisted-pair connectivity
			  • Pinout: MDI crossover
				6.1

• Gigabit Ethernet IQ PIC with SFP	2	PB-2GE-SFP-QPP	• Optical: LC/PC
			• Copper: RJ-45
			  • Four-pair, Category 5 shielded twisted-pair connectivity
			  • Pinout: MDI crossover
				6.1 (7.3 TX Matrix router)

Gigabit Ethernet IQ2				
Gigabit Ethernet IQ2 PICs with SFP (T640 Router)				

• Gigabit Ethernet IQ2 PIC with SFP	4	PB-4GE-TYPE1-SFP-IQ2	• Optical: LC/PC
			• Copper: RJ-45
			  • Four-pair, Category 5 shielded twisted-pair connectivity
			  • Pinout: MDI crossover
				7.6R3

• Gigabit Ethernet IQ2 PIC with SFP	8	PB-8GE-TYPE2-SFP-IQ2	• Optical: LC/PC
			• Copper: RJ-45
			  • Four-pair, Category 5 shielded twisted-pair connectivity
			  • Pinout: MDI crossover
				7.6R2

• Gigabit Ethernet IQ2 PIC with SFP	8	PB-8GE-TYPE3-SFP-IQ2	• Optical: LC/PC
			• Copper: RJ-45
			  • Four-pair, Category 5 shielded twisted-pair connectivity
			  • Pinout: MDI crossover
				8.2

Copyright © 2019, Juniper Networks, Inc.

Table 51: PICs Supported in the T640 Router (continued)

PIC Family and Type	Ports	Model Number	Connector	First Junos OS Release Support

10-Gigabit Ethernet IQ2 PIC with XFP (T640 Router)	1	PC-1XGE-TYPE3–XFP-IQ2	• Optical: LC/PC
			• Copper: RJ-45
			  • Four-pair, Category 5 shielded twisted-pair connectivity
			  • Pinout: MDI crossover
				8.0R3

Gigabit Ethernet and 10-Gigabit Ethernet Enhanced IQ2 (IQ2E)				
Gigabit Ethernet Enhanced IQ2 (IQ2E) PICs with SFP (T640 Router)				

• Gigabit Ethernet Enhanced IQ2 (IQ2E) PIC with SFP	4	PB-4GE-TYPE1-SFP-IQ2E	• Optical: LC/PC
			• Copper: RJ-45
			  • Four-pair, Category 5 shielded twisted-pair connectivity
			  • Pinout: MDI crossover
				9.4

• Gigabit Ethernet Enhanced IQ2 (IQ2E) PIC with SFP	8	PB-8GE-TYPE2-SFP-IQ2	• Optical: LC/PC
			• Copper: RJ-45
			  • Four-pair, Category 5 shielded twisted-pair connectivity
			  • Pinout: MDI crossover
				9.4

10-Gigabit Ethernet Enhanced IQ2 (IQ2E) PIC with XFP (T640 Router)	1	PC-1XGE-TYPE3-XFP-IQ2E	• Optical: LC/PC
			• Copper: RJ-45
			  • Four-pair, Category 5 shielded twisted-pair connectivity
			  • Pinout: MDI crossover
				9.4

10-Gigabit Ethernet				
10-Gigabit Ethernet PIC with XENPAK (T640 Router)				
• 10-Gigabit Ethernet PIC with XENPAK 10GBASE-ER or 10GBASE-LR transceivers	1	PC-1XGE-XENPAK	• XENPAK	6.2
• 10-Gigabit Ethernet PIC with XENPAK 10GBASE-SR or 10GBASE-ZR transceivers	1	PC-1XGE-XENPAK	• XENPAK	7.1

Copyright © 2019, Juniper Networks, Inc.

Table 51: PICs Supported in the T640 Router (continued)

PIC Family and Type	Ports	Model Number	Connector	First Junos OS Release Support
10-Gigabit Ethernet DWDM PIC (T640 Router)	1	PC-1XGE-DWDM-CBAND	• Optical: SC/PC	7.5
10-Gigabit Ethernet DWDM OTN PIC (T640 Router)	1	PC-1XGE-DWDM-OTN	• Optical: SC/PC	9.4
10-Gigabit Ethernet LAN/WAN PIC with SFP+ (T640 Router)	10	PD-5-10XGE-SFPP	• Optical: LC/PC	10.1
10-Gigabit Ethernet LAN/WAN PIC with XFP (T640 Router)	4	PD-4XGE-XFP	• Optical: LC/PC	9.0
40-Gigabit Ethernet				
40-Gigabit Ethernet PIC with CFP (T640 Router)	4	PD-1XLE-CFP	Optical: SC/PC	11.4
Services				
MultiServices PICs (T640 Router)				
• 100 MultiServices PIC	0	PB-MS-100-1	• None	8.1
• 400 MultiServices PIC	0	PB-MS-400-2	• None	8.1R2
• 500 MultiServices PIC	0	PB-MS-500-3	• None	8.3
Tunnel Services PIC (T640 Router)				
• Type 1 Tunnel Services	0	PB-TUNNEL-1	• None	8.0
• Type 2 Tunnel Services	0	PB-TUNNEL	• None	6.1
• Type 3 Tunnel Services	0	PC-TUNNEL	• None	5.3
40-Gigabit Tunnel Services PIC (T640 Router)	0	PD-TUNNEL	• None	8.0
SONET/SDH				
SONET/SDH OC3/STM1 Enhanced IQ (IQE) PIC with SFP (T640 Router)	4	PB-4OC3-STM1-IQE-SFP	• Optical: LC/PC	9.3R2
SONET/SDH OC3/STM1 (Multi-Rate) PICs with SFP (T640 Router)				
• SONET/SDH OC3/STM1 (Multi-Rate) PIC with SFP	4	PB-4OC3-1OC12-SON-SFP	• Optical: LC/PC	8.4

Copyright © 2019, Juniper Networks, Inc.

Table 51: PICs Supported in the T640 Router (continued)

PIC Family and Type	Ports	Model Number	Connector	First Junos OS Release Support
• SONET/SDH OC3/STM1 (Multi-Rate) PIC with SFP	4	PB-4OC3-1OC12-SON-SFP	• Optical: LC/PC	8.3
SONET/SDH OC12/STM4 Enhanced IQ (IQE) PIC with SFP (T640 Router)	1	PB-1OC12-STM4-IQE-SFP	• Optical: LC/PC	9.3
SONET/SDH OC12/STM4 (Multi-Rate) PICs with SFP (T640 Router)				
• SONET/SDH OC12/STM4 (Mulit-Rate) PIC with SFP	1	PB-1OC12-SON-SFP	• Optical: LC/PC	8.4
• SONET/SDH OC12/STM4 (Mulit-Rate) PIC with SFP	4	PB-4OC3-40C12-SON-SFP	• Optical: LC/PC	8.3
SONET/SDH OC48c/STM16 PIC with SFP (T640 Router)				
• SONET/SDH OC48c/STM16 PIC with SFP	1		• Optical: LC/PC	6.1
• SONET/SDH OC48c/STM16 PIC with SFP	4	PC-4OC48-SON-SFP	• Optical: LC/PC	6.2
SONET/SDH OC48/STM16 Enhanced IQ (IQE) PIC with SFP (T640 Router)	4	PC-4OC48-STM16-IQE-SFP	• Optical: LC/PC	10.4R2
SONET/SDH OC48/STM16 (Multi-Rate) PIC with SFP (T640 Router)	1	PB-1OC48-SON-B-SFP	• Optical: LC/PC	8.3
SONET/SDH OC192c/STM64 PIC (T640 Router)	1	PC-1OC192-SON-VSR	• 12-ribbon multimode fiber with MTP connector	5.3
SONET/SDH OC192c/STM64 PICs with XFP (T640 Router)				
• SONET/SDH OC192c/STM64 PIC with XFP	1	PC-1OC192-SON-XFP	• Optical: LC/PC	8.1
• SONET/SDH OC192c/STM64 PIC with XFP	4	PD-4OC192-SON-XFP	• Optical: LC/PC	8.1
SONET/SDH OC768c/STM256 PIC (T640 Router)	1	PD-1OC768-SON-SR	• Optical: SC/PC	7.5

Related Documentation

- T640 PIC Description on page 85
- *T640 PIC Combination Limitations*
- T640 FPCs Supported on page 83

Copyright © 2019, Juniper Networks, Inc.

- T640 PIC/FPC Compatibility on page 95

T640 End-of-Life PICs Supported

Table 51 on page 86 lists the end-of-life PICs supported by the T640 router. The PICs are listed alphabetically by PIC family.

NOTE: The T640 router is now end-of-life. See the JTAC support bulletin TSB16819 for additional information about the PICs and other associated FRUs that moved to end-of-life with the router. The "T640 PICs Supported" on page 86 topic lists PICs that had not moved to end-of-life before the T640 router itself moved to end-of-life.

Table 52: End-of-Life PICs Supported in the T640 Router

PIC Family and Type	Ports	Model Number	Connector	First Junos OS Release Support
ATM				
ATM OC3 EOL PIC (T640 Router)	2	PB-2OC3-ATM-MM PB-2OC3-ATM-SMIR	• Optical: SC/PC	4.0
ATM OC12 EOL PIC (T640 Router)	1	PB-1OC12-ATM-MM PB-1OC12-ATM-SMIR	• Optical: SC/PC	4.0
Channelized IQ				
Channelized OC12 IQ EOL PIC (T640 Router)	1	PB-1CHOC12SMIR-QPP	• Optical: SC/PC	6.3
DS3				
DS3 EOL PIC (T640 Router)	4	PB-2DS3	• Custom 10 ft (3.05 m) posilock SMB to BNC male cable, separate Rx and Tx (provided)	6.3
Ethernet				
Gigabit Ethernet EOL PICs (T640 Router)				
• Gigabit Ethernet PIC	2	PB-2GE-LX PB-2GE-SX	• Optical: SC/PC	5.3
• Gigabit Ethernet PIC	4	PB-4GE-SX	• Optical: SC/PC	5.3
10-Gigabit Ethernet EOL PIC (T640 Router)	1	PC-1XGE-LR	• Optical: SC/PC	5.4
Services				

Table 52: End-of-Life PICs Supported in the T640 Router (continued)

PIC Family and Type	Ports	Model Number	Connector	First Junos OS Release Support
Adaptive Services II EOL PIC (T640 Router)	0	PB-AS2	• None	6.4 (7.3 TX Matrix platform)
Adaptive Services II Layer 2 Services EOL PIC (T640 Router)	0	PB-AS2-LAYER2SERVICES	• None	7.5
Link Services EOL PIC (T640 Router)	0	PB-LS-4 PB-LS-32 PB-LS-128	• None	6.1
Monitoring Services II EOL PIC (T640 Router)	0	PB-PM2	• None	7.1R2
Monitoring Services III EOL PIC (T640 Router)	0	PB-PM3	• None	7.4
SONET/SDH				
SONET/SDH OC3c/STM1 EOL PICs (T640 Router)				
• SONET/SDH OC3c/STM1 PIC	4	PB-4OC3-SON-MM PB-4OC3-SON-SMIR	• Optical: SC/PC	5.5
• SONET/SDH OC3c/STM1 PIC	4	PB-4OC3-SON-MM PB-4OC3-SON-SMIR	• Optical: SC/PC	7.1
SONET/SDH OC12c/STM4 EOL PICs (T640 Router)				
• SONET/SDH OC12c/STM4 PIC	1	PB-1OC12-SON-MM	• Optical: SC/PC	7.1
• SONET/SDH OC12c/STM4 PIC	4	PB-4OC12-SON-MM PB-4OC12-SON-SMIR	• Optical: SC/PC	5.3
• SONET/SDH OC12c/STM4 PIC	4	PB-4OC12-SON-MM PB-4OC12-SON-SMIR	• Optical: SC/PC	5.5
SONET/SDH OC48c/STM16 EOL PICs (T640 Router)				
• SONET/SDH OC48c/STM16 PIC	1	PB-1OC48-SON-SMLR PB-1OC48-SON-SMSR	• Optical: SC/PC	5.3
• SONET/SDH OC48c/STM16 PIC	4	PC-4OC48-SON-SMSR	• Optical: SC/PC	5.3
SONET/SDH OC48c/STM16 EOL PIC with SFP (T640 Router)	1	PB-1OC48-SON-SFP	• Optical: LC/PC	6.1

Copyright © 2019, Juniper Networks, Inc.

Table 52: End-of-Life PICs Supported in the T640 Router (continued)

PIC Family and Type	Ports	Model Number	Connector	First Junos OS Release Support
SONET/SDH OC192c/STM64 EOL PICs (T640 Router)	1	PC-1OC192-SON-LR PC-1OC192-SON-SR2	• Optical: SC/PC	5.4

Related Documentation

- T640 PIC Description on page 85

T640 PIC/FPC Compatibility

The PIC/FPC compatibility matrixes lists the current PICs for T640 routers, both standalone and connected to a T640 Matrix router unless otherwise noted, and the first Junos OS Release in which the FPC supports the PIC. For example, Junos 7.6 is the first release in which the T640-FPC1-E2 supports the ATM2 OC3/STM1 IQ, 2-port PIC.

- PIC/FPC Compatibility (Type 1 FPCs and Type 1 PICs) on page 95
- PIC/FPC Compatibility (Type 2 FPCs and Type 2 PICs) on page 97
- PIC/FPC Compatibility (Type 3 FPCs and Type 3 PICs) on page 98
- PIC/FPC Compatibility (Type 4 FPCs and Type 4 PICs) on page 100

PIC/FPC Compatibility (Type 1 FPCs and Type 1 PICs)

Table 53 on page 95 provides a PIC/FPC compatibility matrix for the current Type 1 PICs for the T640 router and Type 1 FPCs.

Table 53: T640 PIC/FPC Compatibility Type 1

PIC	PIC Model Number	T640-FPC1-E	T640-FPC1-E2	T640-FPC1-ES
ATM2 IQ PICs				
ATM2 E3 IQ, 4-port	PB-4E3-ATM2	7.4	7.4	–
ATM2 OC3/STM1 IQ, 2-port	PB-2OC3-ATM2-MM PB-2OC3-ATM2-SMIR	7.6	7.6	–
ATM2 OC12/ STM4 IQ, 1-port	PB-1OC12-ATM2-MM PB-1OC12-ATM2-SMIR	8.0	8.0	–
Channelized IQ PICs				
ChDS3 IQ, 4-port	PB-4CHDS3-QPP	8.0	8.0	9.4
ChOC3 IQ, 1-port	PB-1CHOC3-SMIR-QPP	7.6	7.6	9.4
ChSTM1 IQ, 1-port	PB-1CHSTM1-SMIR-QPP	7.5	7.5	9.4

Copyright © 2019, Juniper Networks, Inc.

Table 53: T640 PIC/FPC Compatibility Type 1 (continued)

PIC	PIC Model Number	T640-FPC1-E	T640-FPC1-E2	T640-FPC1-ES
Channelized IQE PICs				
ChDS3/E3 IQE, 4-port	PB-4CHDS3-E3-IQE-BNC	9.3R2	9.3R2	9.4
ChE1/T1 IQE, 10-port	PB-1OCHE1-T1-IQE-RJ48	9.5	9.5	9.5
ChOC3/STM1 IQE, 2-port	PB-2CHOC3-STM1-IQE-SFP	9.3	9.3	9.4
ChOC12/STM4 IQE, 1-port	PB-1CHOC12-STM4-IQE-SFP	9.3	9.3	9.4
TI, DS3, E1, E3 PICs				
DS3, 4-port	PB-4DS3	6.2	–	–
E3 IQ, 4-port	PB-4E3-QPP	8.5	8.5	–
Fast Ethernet and Gigabit Ethernet PICs				
Fast Ethernet, 4-port	PB-4FE-TX	6.3	7.4	9.4
Gigabit Ethernet, 1-port SFP	PB-1GE-SFP	8.0	8.0	9.4
Gigabit Ethernet IQ PICs				
Gigabit Ethernet IQ, 1-port SFP	PB-1GE-SFP-QPP	8.0	8.0	–
Gigabit Ethernet IQ2 PICs				
Gigabit Ethernet IQ2, 4-port SFP	PB-4GE-TYPE1-SFP-IQ2	7.6R3	7.6R3	9.4
Gigabit Ethernet IQ2E PICs				
Gigabit Ethernet IQ2E, 4-port SFP	PB-4GE-TYPE1-SFP-IQ2E	9.4	9.4	–
Services PICs				
MultiServices 100	PB-MS-100-1	8.1	8.1	9.4
Tunnel Services	PB-TUNNEL1	8.0	8.0	9.4
SONET/SDH PICs				
OC3/ STM1 IQE, 4-port SFP	PB-4OC3-STM1-IQE-SFP	9.3R2	9.3R2	–
OC3c/STM1 (Multi-Rate), 4-port (Type 1)	PB-4OC3-1OC12-SON-SFP	8.4	8.4	9.4

Copyright © 2019, Juniper Networks, Inc.

Table 53: T640 PIC/FPC Compatibility Type 1 (continued)

PIC	PIC Model Number	T640-FPC1-E	T640-FPC1-E2	T640-FPC1-ES
OC12/ STM4 IQE, 1-port SFP	PB-1OC12-STM4-IQE-SFP	9.3	9.3	–
OC12c/STM4 (Multi-Rate), 1-port (Type 1)	PB-1OC12-SON-SFP	8.4	8.4	9.4

PIC/FPC Compatibility (Type 2 FPCs and Type 2 PICs)

Table 54 on page 97 provides a PIC/FPC compatibility matrix for the current Type 2 PICs for the T640 router and Type 2 FPCs.

Table 54: T640 PIC/FPC Compatibility Type 2

PIC	PIC Model Number	T640-FPC2	T640-FPC2-E	T640-FPC2-E2	T640-FPC2-ES
ATM2 IQ PICs					
ATM2 OC12/ STM4 IQ, 1-port	PB-1OC12-ATM2-MM PB-1OC12-ATM2-SMIR	5.5	6.3	7.4	–
ATM2 OC48/ STM16 IQ, 1-port SFP	PB-1OC48-ATM2-SFP	7.3	7.3	7.4	–
Channelized IQE PICs					
ChOC12/STM4 IQE, 4-port	PB-4CHOC12-STM4-IQE-SFP	–	9.4	9.4	9.5
ChOC48/STM16 IQE, 1-port	PB-1CHOC48-STM16-IQE-SFP	–	9.4	9.4	9.5
Gigabit Ethernet PICs					
Gigabit Ethernet, 2-port SFP	PB-2GE-SFP	6.4	6.4	7.4	9.5
Gigabit Ethernet, 4-port SFP	PB-4GE-SFP	7.0	7.0	7.4	9.5
Gigabit Ethernet IQ PICs					
Gigabit Ethernet IQ, 2-port SFP	PB-2GE-SFP-QPP in a standalone T640 router	6.1	6.3	7.4	–
	PB-2GE-SFP-QPP in a T640 router connected to a TX Matrix router	7.3	7.3	7.4	–
Gigabit Ethernet IQ2 PICs					
Gigabit Ethernet IQ2, 8-port SFP (Type 2)	PB-8GE-TYPE2-SFP-IQ2	–	7.6R2	7.6R2	9.5
Gigabit Ethernet IQ2E PICs					

Copyright © 2019, Juniper Networks, Inc.

Table 54: T640 PIC/FPC Compatibility Type 2 (continued)

PIC	PIC Model Number	T640-FPC2	T640-FPC2-E	T640-FPC2-E2	T640-FPC2-ES
Gigabit Ethernet IQ2E, 8-port SFP (Type 2)	PB-8GE-TYPE2-SFP-IQ2E	–	9.4	9.4	–
Services PICs					
MultiServices 400	PB-MS-400-2	–	8.1R2	8.1R2	9.5
Tunnel Services	PB-TUNNEL	6.1	6.3	7.4	9.5
SONET/SDH PICs					
OC3c/STM1 (Multi-Rate), 4-port (Type 2)	PB-4OC3-1OC12-SON2-SFP	–	8.3	8.3	–
OC12c/STM4 (Multi-Rate), 4-port (Type 2)	PB-4OC3-4OC12-SON-SFP	–	8.3	8.3	9.5
OC48c/ STM16, 1-port SFP	PB-1OC48-SON-SFP	6.1	6.3	7.4	–
OC48/STM16 (Multi-Rate), 4-port (Type 2)	PB-1OC48-SON-B-SFP	–	8.3	8.3	9.5

PIC/FPC Compatibility (Type 3 FPCs and Type 3 PICs)

Table 55 on page 98 provides a PIC/FPC compatibility matrix for the current Type 3 PICs for the T640 router and Type 3 FPCs.

Table 55: T640 PIC/FPC Compatibility Type 3

PIC	PIC Model Number	T640-FPC3	T640-FPC3-E	T640-FPC3-E2	T640-FPC3-ES
Channelized IQE PICs					
ChOC12/STM4 IQE, 4-port	PC-4CHOC12-STM4-IQE-SFP in a standalone T640 router This PIC is not supported in a T640 router connected to a TX Matrix router.	–	–	–	10.0R2
Gigabit Ethernet PICs					
Gigabit Ethernet, 10-port SFP	PC-10-GE-SFP	5.5	6.3	7.4	9.0
Gigabit Ethernet and 10-Gigabit Ethernet IQ2 PICs					

Copyright © 2019, Juniper Networks, Inc.

Table 55: T640 PIC/FPC Compatibility Type 3 (continued)

PIC	PIC Model Number	T640-FPC3	T640-FPC3-E	T640-FPC3-E2	T640-FPC3-ES
Gigabit Ethernet IQ2, 8-port SFP (Type 3)	PC-8GE-TYPE3-SFP-IQ2	8.2	8.2	8.2	9.0
10-Gigabit Ethernet IQ2, 1-port XFP	PC-1XGE-TYPE3-XFP-IQ2	8.0R3	8.0R3	8.0R3	9.0
Gigabit Ethernet and 10-Gigabit Ethernet IQ2E PICs					
Gigabit Ethernet IQ2E, 8-port SFP (Type 3)	PC-8GE-TYPE3-SFP-IQ2E	9.4	9.4	9.4	9.4
10-Gigabit Ethernet IQ2E, 1-port XFP	PC-1XGE-TYPE3-XFP-IQ2E	9.4	9.4	9.4	9.4
10-Gigabit Ethernet PICs					
10-Gigabit Ethernet, 1-port XENPAK	PC-1XGE-XENPAK with 10GBASE-ER and 10GBASE-LR transceivers installed	6.2	6.3	7.4	9.0
	PC-1XGE-XENPAK with 10GBASE-SR and 10GBASE-ZR transceivers installed	7.1	7.1	7.4:	9.0
10-Gigabit Ethernet, 1-port DWDM	PC-1XGE-DWDM-CBAND	7.5	7.5	7.5	9.0
10-Gigabit Ethernet, 1-port DWDM OTN	PC-1XGE-DWDM-OTN	9.4	9.4	9.4	9.4
Services PICs					
MultiServices 500	PC-MS-500-3	–	8.3	8.3	9.3
Tunnel Services	PC-TUNNEL	5.3	6.3	7.4	9.0
SONET/SDH PICs					
OC48/STM16 IQE, 4-port SFP	PC-4OC48-STM16-IQE-SFP in a standalone T640 router This PIC is not supported in a T640 router connected to a TX Matrix router.	–	–	–	10.4R2

Table 55: T640 PIC/FPC Compatibility Type 3 (continued)

PIC	PIC Model Number	T640-FPC3	T640-FPC3-E	T640-FPC3-E2	T640-FPC3-ES
OC48c/ STM16, 4-port SFP	PC-4OC48-SON-SFP	6.2	6.3	7.4	9.0
OC192c / STM64, 1-port	PC-1OC192-SON-VSR	5.3	6.3	7.4	9.0
OC192c / STM64, 1-port XFP	PC-1OC192-SON-XFP	–	8.1	8.1	9.0

PIC/FPC Compatibility (Type 4 FPCs and Type 4 PICs)

Table 56 on page 100 provides a PIC/FPC compatibility matrix for the current Type 4 PICs for the T640 router and Type 4 FPCs.

Table 56: T640 PIC/FPC Compatibility Type 4

PIC	PIC Model Number	T640-FPC4-ES	T640-FPC4-1P-ES
10-Gigabit Ethernet PICs			
10-Gigabit LAN/WAN with SFP+	PD-5-10XGE-SFPP	10.1	10.1
10-Gigabit Ethernet, 4-port LAN/WAN with XFP	PD-4XGE-XFP	9.0	9.5
40 Gigabit Ethernet PICs			
40-Gigabit with CFP	PD-1XLE-CFP	–	11.4
Services PICs			
40-Gigabit Tunnel Services	PD-TUNNEL	7.5	9.5
SONET/SDH PICs			
OC192c / STM64, 4-port XFP	PD-4OC192-SON-XFP	8.1	9.5
OC768c/ STM256, 1-port	PD-1OC768-SON-SR	7.5	9.5

Related Documentation

- T640 PIC Description on page 85
- *T640 PIC Combination Limitations*
- T640 PICs Supported on page 86

Copyright © 2019, Juniper Networks, Inc.

- T640 FPCs Supported on page 83

Copyright © 2019, Juniper Networks, Inc.

CHAPTER 7

Power System Components and Descriptions

- T640 Power System Description on page 103
- T640 Two-Input 160-A DC Power Supply Description on page 104
- T640 Two-Input 160-A DC Power Supply LEDs on page 106
- T640 Three-Input 240-A DC Power Supply Description on page 107
- T640 Three-Input 240-A DC Power Supply LEDs on page 108
- T640 Four-Input 240-A DC Power Supply Description on page 110
- T640 Four-Input 240-A DC Power Supply LEDs on page 111
- T640 Six-Input DC Power Supply Description on page 112
- T640 Six-Input DC Power Supply LEDs on page 113
- T640 Three-Phase Delta and Wye AC Power Supply Description on page 114
- T640 Three-Phase Delta and Wye AC Power Supply LEDs on page 117

T640 Power System Description

The router supports two load-sharing DC power supplies, located at the lower rear of the chassis. The power supplies connect to the midplane, which distributes different output voltages produced by the power supply to the router components, depending on voltage requirements.

The T640 router supports the DC power supplies in Table 57 on page 104.

NOTE: Mixing power supplies with a different number of inputs in the same router is supported only during upgrade. Mixing different types of power supplies is not supported during normal operations.

Table 57: Supported Power Supplies

Name	Model Number	First Supported Junos OS Release
Two-input 160-A DC power supply (EOL PSN-2010-01-644) See the "T640 Two-Input 160-A DC Power Supply Description" on page 104.	PWR-T-DC	5.3
Three-input 240-A DC power supply See the "T640 Three-Input 240-A DC Power Supply Description" on page 107. NOTE: For the T640 router, this power supply is supported only in **2-INPUT** mode.	PWR-T1600-3-80-DC	8.5
Four-input 240-A DC power supply See the "T640 Four-Input 240-A DC Power Supply Description" on page 110..	PWR-T1600-4-60-DC	10.0
Six-input DC power supply See the "T640 Six-Input DC Power Supply Description" on page 112..	PWR-T-6-60-DC	12.1

Related Documentation

- T640 Hardware Component Overview on page 13
- Powering On a DC-Powered T640 Router on page 247
- Maintaining the T640 Power Supplies on page 477
- T640 DC Power System Electrical Specifications on page 133

T640 Two-Input 160-A DC Power Supply Description

- Two-Input 160-A DC Power Supply on page 104
- Two-Input 160-A DC Power Supply Inputs on page 105
- Two-Input 160-A DC Power Supply Load Sharing and Fault Tolerance on page 105

Two-Input 160-A DC Power Supply

Each two-input 160-A DC power supply weighs approximately 23 lb (10.5 kg) and consists of two inputs, two 80-A @ –48 VDC circuit breakers, a fan, and LEDs to monitor the status of the power supply. Figure 36 on page 105 shows the two-input 160-A DC power supply.

Copyright © 2019, Juniper Networks, Inc.

Figure 36: Two-Input 160-A DC Power Supply

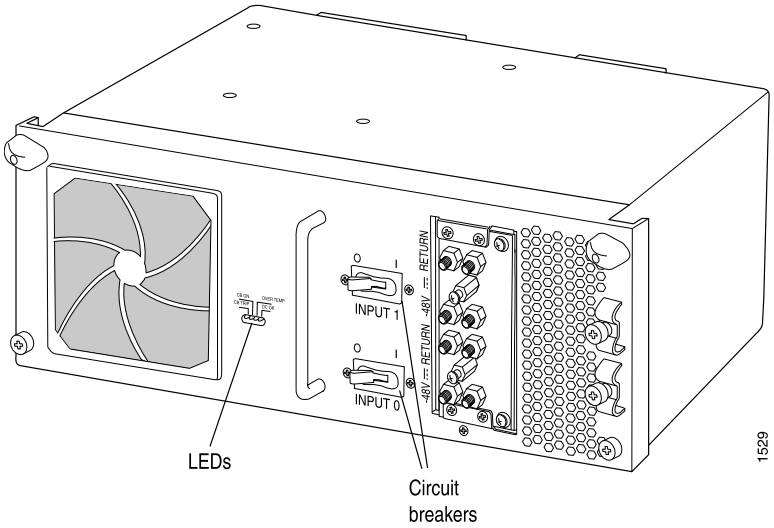

Two-Input 160-A DC Power Supply Inputs

Each two-input 160-A DC power supply has two inputs—**INPUT 1** and **INPUT 0**, from top to bottom—each with its own 80-A (@ –48 VDC) circuit breaker.

NOTE: All inputs on the two-input 160-A DC power supply in slot **PEM0** must be powered by dedicated power feeds derived from feed A, and all inputs on the two-input 160-A DC power supply in slot **PEM1** must be powered by dedicated power feeds derived from feed B. This configuration provides the commonly deployed A/B feed redundancy for the system.

Table 58 on page 105 describes which components are powered by each input.

Table 58: Components Powered by Each Input

Input	Provides Power to These Components
INPUT 0	FPCs in slots **FPC0** and **FPC1**, SIBs, control boards, Routing Engines, CIP, craft interface, and fan trays
INPUT 1	FPCs in slots **FPC2** through **FPC7**

Two-Input 160-A DC Power Supply Load Sharing and Fault Tolerance

When the router is operating normally and both power supplies in a redundant power system are switched on, load sharing between them occurs automatically. When one power supply fails or is turned off, the other power supply immediately assumes the entire electrical load for the system. A single power supply with both inputs active can provide full power for as long as the router is operational. Table 59 on page 106 describes the behavior of the two-input 160-A DC power supply and router if one of the inputs fails.

Copyright © 2019, Juniper Networks, Inc.

Table 59: Fault Tolerance

Redundancy	Fault Tolerance When One Input Fails or Is Disconnected
Nonredundant power supplies	If either input fails, the router shuts down. NOTE: We recommend that you install redundant power supplies.
Redundant power supplies	If either input on one power supply fails, the other power supply assumes the electrical load for both inputs. If one of the inputs on the other power supply is not functional, the router shuts down.

Related Documentation

- T640 Power System Description on page 103
- Powering On a DC-Powered T640 Router on page 247
- Maintaining the T640 Power Supplies on page 477

T640 Two-Input 160-A DC Power Supply LEDs

Four LEDs on each two-input 160-A DC power supply faceplate indicate the status of the power supply. In addition, a power supply failure triggers the red alarm LED on the craft interface. Table 60 on page 106 describes the functions of the power supply LEDs.

Table 60: Two-Input 160-A DC Power Supply LEDs

LED	Color	State	Description
CB OK	Green	On steadily	Circuit breaker is on.
		Off	Circuit breaker is off.
CB TRIP	Yellow	On steadily	Circuit breaker is not turned on, or host subsystem has detected a failure and has turned the circuit breaker off.
		Off	No problems have occured with circuit breaker, or the power supply is off.
OVER TEMP	Yellow	On steadily	Power supply has exceeded recommended temperature.
		Off	Power supply is within the recommended temperature or is not turned on.
DC OK	Blue	On steadily	Power supply is installed correctly and is functioning normally.
		Blinking	Power supply is starting up, is not properly installed, or is not functioning correctly. One of the inputs might have failed, or the power supply might not be receiving sufficient power.
		Off	Power supply is not powered on.

Copyright © 2019, Juniper Networks, Inc.

Related Documentation

- T640 Power System Description on page 103
- Powering On a DC-Powered T640 Router on page 247
- Maintaining the T640 Power Supplies on page 477
- T640 LED Overview on page 486

T640 Three-Input 240-A DC Power Supply Description

- Three-Input 240-A DC Power Supply on page 107
- Three-Input 240-A DC Power Supply Inputs on page 107
- Three-Input 240-A DC Power Supply Load Sharing and Fault Tolerance on page 108

Three-Input 240-A DC Power Supply

Each three-input 240-A DC power supply weighs approximately 25 lb (11.3 kg) and consists of three inputs, three 80-A circuit breakers, a fan, and LEDs to monitor the status of the power supply. Figure 37 on page 107 shows the three-input 240-A DC power supply in **2-INPUT** mode.

Figure 37: Three-Input 240-A DC Power Supply

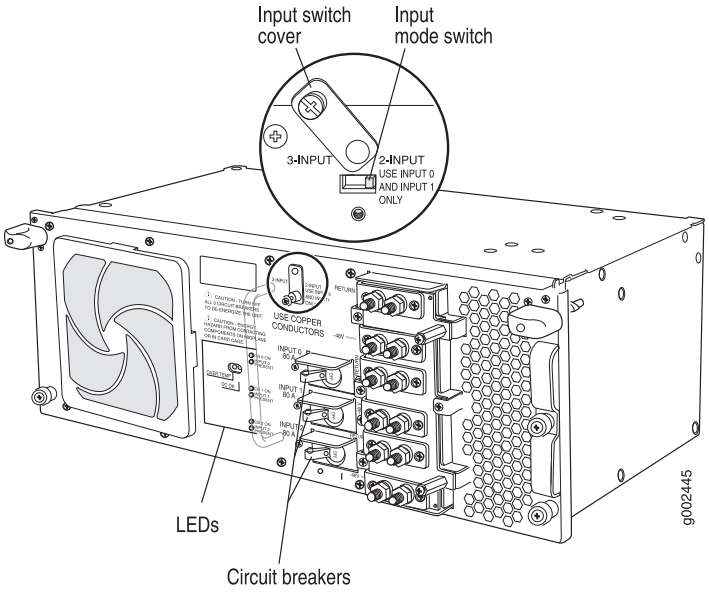

Three-Input 240-A DC Power Supply Inputs

The three-input 240-A DC power supply inputs are labeled **INPUT 0**, **INPUT 1**, and **INPUT 2**, from top to bottom. Each input consists of –48 VDC and return, each with its own 80-A circuit breaker. The input mode switch on the faceplate allows you to set the DC power supply to either **2–INPUT** or **3–INPUT** mode. **2-INPUT** mode is required for the T640 router and TX Matrix router.

Table 61 on page 108 describes which components are powered by each input.

Table 61: Components Powered by Each Three-Input 240-A DC Power Supply Input

Input	Three-Input Mode
INPUT 0	T640-SIBs, control boards, fan trays, Routing Engines, and FPCs in slots **FPC0** and **FPC1**
INPUT 1	FPCs in slots **FPC2** through **FPC7**
INPUT 2	This input is not supported in **2–INPUT** mode.

Three-Input 240-A DC Power Supply Load Sharing and Fault Tolerance

When the router is operating normally and both power supplies are switched on, load sharing between them occurs automatically. When one power supply fails or is turned off, the other power supply immediately assumes the entire electrical load for the system. A single power supply can provide full power for as long as the router is operational. Table 62 on page 108 describes the behavior of the power supply if one of the inputs fails.

Table 62: Fault Tolerance

Redundancy	Fault Tolerance When One Input Fails or is Disconnected
Nonredundant power supply	If this input fails, the router shuts down. NOTE: We recommend that you install redundant power supplies.
Redundant power supplies	If an input on one power supply fails, the other power supply assumes the electrical load for all inputs. If one input on the other power supply is not functional, the router shuts down.

Related Documentation

- T640 Power System Description on page 103
- Powering On a DC-Powered T640 Router on page 247
- Maintaining the T640 Power Supplies on page 477

T640 Three-Input 240-A DC Power Supply LEDs

LEDs on each power supply faceplate (see Figure 38 on page 109) indicate the status of the power supply. In addition, a power supply failure triggers the red alarm LED on the craft interface. Table 63 on page 109 describes the functions of the power supply LEDs.

Copyright © 2019, Juniper Networks, Inc.

Figure 38: Three-Input 240-A DC Power Supply LEDs

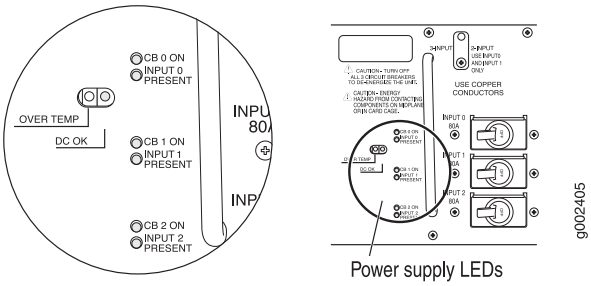

Table 63 on page 109 describes the three-input 240-A DC power supply LEDs.

Table 63: Three-Input 240-A DC Power Supply LEDs

LED	Color	State	Description
CB ON—One per input	Green	On steadily	Circuit breaker is on.
		Off	Circuit breaker is not turned on, or host subsystem has detected a failure and has turned the circuit breaker off.
DC OK—One per power supply	Blue	On steadily	When the power supply is correctly set to **2-INPUT** mode and **INPUT 0** and **INPUT 1** are properly energized, the **DC OK** LED indicates that the power supply is functioning normally.
		Blinking	Power supply is starting up, is not functioning, is not properly installed, or is not operating properly.
INPUT PRESENT—One per input	Green	On steadily	Input is receiving voltage.
		Off	Input voltage is not present.
OVER TEMP—One per power supply	Yellow	On steadily	Power supply has exceeded recommended temperature.
		Off	Power supply is within the recommended temperature or the power supply is not on.

Related Documentation

- T640 Power System Description on page 103
- Powering On a DC-Powered T640 Router on page 247
- Maintaining the T640 Power Supplies on page 477
- T640 LED Overview on page 486

T640 Four-Input 240-A DC Power Supply Description

- Four-Input 240-A DC Power Supply on page 110
- Four-Input 240-A DC Power Supply Inputs on page 110
- Four-Input 240-A DC Power Supply Load Sharing and Fault Tolerance on page 110

Four-Input 240-A DC Power Supply

Each four-input 240-A DC power supply weighs approximately 26.6 lb (12.0 kg) and consists of four inputs, four 60-A circuit breakers, a fan, and LEDs to monitor the status of the power supply. Figure 39 on page 110 shows the four-input 240-A DC power supply.

Figure 39: Four-Input 240-A DC Power Supply

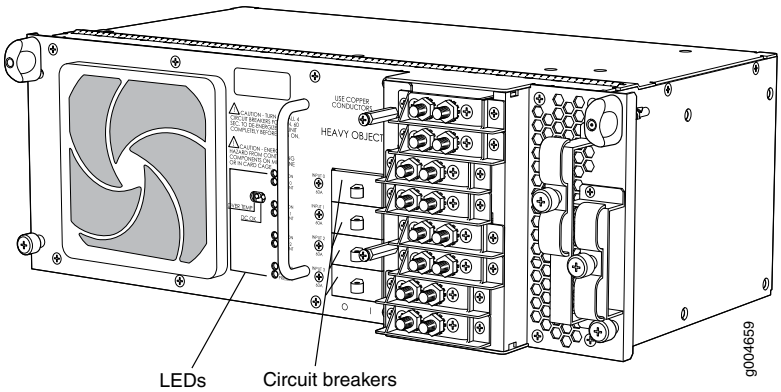

Four-Input 240-A DC Power Supply Inputs

The four-input 240-A DC power supply inputs are labeled **INPUT 0**, **INPUT 1**, and **INPUT 2**, and **INPUT 3** from top to bottom. Each input consists of –48 VDC and return, each with its own 60-A circuit breaker.

Table 64 on page 110 describes which components are powered by each input.

Table 64: Components Powered by Each Four-Input 240-A DC Power Supply Input

Input	Components
INPUT 0	SIBs, control boards, Routing Engines, and half the system fan power
INPUT 1	FPCs in slots **FPC0** and **FPC1** and half the system fan power
INPUT 2	FPCs in slots **FPC2** through **FPC4**
INPUT 3	FPCs in slots **FPC5** through **FPC7**

Four-Input 240-A DC Power Supply Load Sharing and Fault Tolerance

When the router is operating normally and both power supplies are switched on, load sharing between them occurs automatically. When one power supply fails or is turned

Copyright © 2019, Juniper Networks, Inc.

off, the other power supply immediately assumes the entire electrical load for the system. A single power supply can provide full power for as long as the router is operational. If any of the four inputs fails, the router shuts down, and the other power supply assumes the electrical load for all four inputs.

Related Documentation

- T640 Four-Input 240-A DC Power Supply LEDs on page 111
- Troubleshooting the T640 Power System on page 498
- Replacing a T640 Four-Input 240-A DC Power Supply on page 382
- T640 DC Power Supply Electrical Specifications on page 134

T640 Four-Input 240-A DC Power Supply LEDs

LEDs on each four-input 240-A DC power supply faceplate (see Table 65 on page 111) indicate the status of the power supply. In addition, a power supply failure triggers the red alarm LED on the craft interface. Figure 40 on page 111 displays the power supply LEDs.

Figure 40: Four-Input 240-A DC Power Supply LEDs

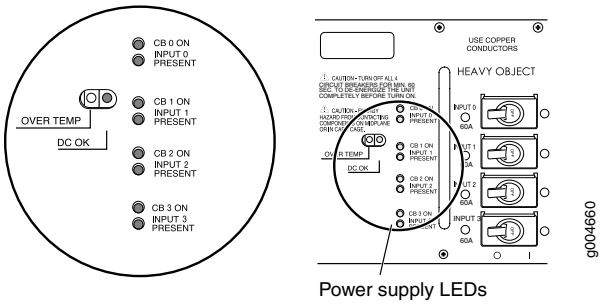

Table 65: Four-Input 240-A DC Power Supply LEDs

LED	Color	State	Description
INPUT PRESENT—One per input	Green	On steadily	Input is receiving voltage.
		Off	Input voltage is not present.
CB ON—One per input	Green	On steadily	Circuit breaker is on.
		Off	Circuit breaker is not turned on, or host subsystem has detected a failure and has turned the circuit breaker off.

Table 65: Four-Input 240-A DC Power Supply LEDs (continued)

LED	Color	State	Description
DC OK—One per power supply	Blue	On steadily	When all four inputs are properly energized, the **DC OK** LED indicates that the power supply is functioning normally.
		Blinking	Either the power supply is starting up, or it is not functioning, not properly installed, or not operating properly.
OVER TEMP—One per power supply	Yellow	On steadily	Power supply has exceeded recommended temperature.
		Off	Power supply is within the recommended temperature or the power supply is not on.

Related Documentation

- T640 Four-Input 240-A DC Power Supply Description on page 110
- Maintaining the T640 Power Supplies on page 477
- T640 LED Overview on page 486
- Troubleshooting the T640 Power System on page 498
- Replacing a T640 Four-Input 240-A DC Power Supply on page 382

T640 Six-Input DC Power Supply Description

- Power Supply Components on page 112
- Inputs on page 113
- Redundancy on page 113

Power Supply Components

Each six-input DC power supply weighs approximately 39.7 lb (18.0 kg) and consists of six inputs, two blowers, a front and side air filter, and LEDs to monitor the status of the power supply. Each power supply is cooled by its own internal cooling system. Figure 41 on page 113 shows the six-input DC power supply.

NOTE: There are no circuit breakers or passive fuses in the router.

Copyright © 2019, Juniper Networks, Inc.

Figure 41: Six-Input DC Power Supply

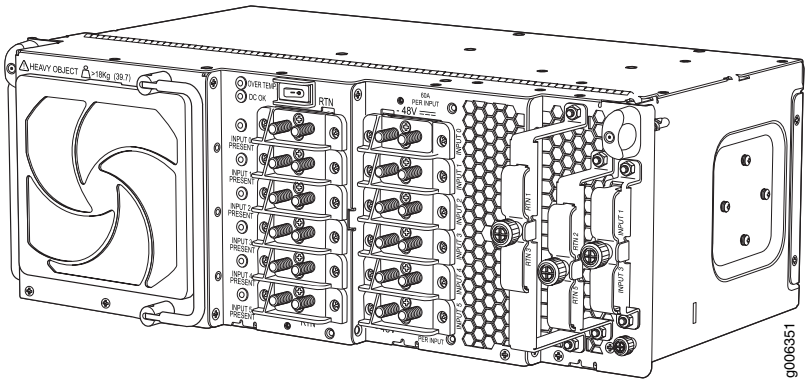

Inputs

The six-input DC power supply inputs are labeled **INPUT 0**, **INPUT 1**, **INPUT 2**, **INPUT 3**, **INPUT 4**, and **INPUT 5**, from top to bottom. Each 60 A input consists of –48 VDC and return.

Table 66 on page 113 describes which components are powered by each input.

Table 66: Components Powered by Each Six-Input DC Power Supply Input

Input	Components
INPUT 0	Fan trays
INPUT 1 through **INPUT 5**	FPCs, Routing Engines, control boards, SIBs, craft interface, SCGs, and other components in the router.

Redundancy

When the router is operating normally and both power supplies are switched on, load sharing between them occurs automatically. When one power supply fails or is turned off, the other power supply immediately assumes the entire electrical load for the system. A single power supply can provide full power for as long as the router is operational.

Related Documentation

- T640 Six-Input DC Power Supply LEDs on page 113
- Troubleshooting the T640 Power System on page 498
- Replacing a T640 Six-Input DC Power Supply on page 395
- T640 DC Power Supply Electrical Specifications on page 134

T640 Six-Input DC Power Supply LEDs

LEDs on each six-input DC power supply faceplate indicate the status of the power supply. In addition, a power supply failure triggers the red alarm LED on the craft interface. Table 67 on page 114 displays the power supply LEDs.

Table 67: Six-Input DC Power Supply LEDs

LED	Color	State	Description
INPUT PRESENT—One per input	Green	On steadily	Input is receiving voltage.
		Off	Input voltage is not present.
DC OK—One per power supply	Blue	On steadily	When all inputs are properly energized, the **DC OK** LED indicates that the power supply is functioning normally.
		Blinking	Either the power supply is starting up, or it is not functioning, not properly installed, or not operating properly.
OVER TEMP—One per power supply	Yellow	On steadily	Power supply has exceeded recommended temperature.
		Off	Power supply is within the recommended temperature or the power supply is not on.

Related Documentation

- T640 Six-Input DC Power Supply Description on page 112
- Maintaining the T640 Power Supplies on page 477
- T640 LED Overview on page 486
- Troubleshooting the T640 Power System on page 498
- Replacing a T640 Six-Input DC Power Supply on page 395

T640 Three-Phase Delta and Wye AC Power Supply Description

- Three-Phase Delta AC Power Supply on page 114
- Three-Phase Wye AC Power Supply on page 116
- AC Power Supply Load Sharing and Fault Tolerance on page 117

Three-Phase Delta AC Power Supply

Each three-phase delta AC power supply weighs approximately 31.0 lb (14.06 kg). A metal wiring compartment contains the AC terminal block and ground labeled **GND**. The AC terminal block consists of three input terminals labeled **L1**, **L2**, and **L3**, from left to right. The power switch provides power to the router. Each power supply's cooling system consists of two fans, a front air filter, and a side air filter. LEDs provide the status of the power supply. Figure 42 on page 115 shows the three-phase delta AC power supply.

Copyright © 2019, Juniper Networks, Inc.

Figure 42: Three-Phase Delta AC Power Supply

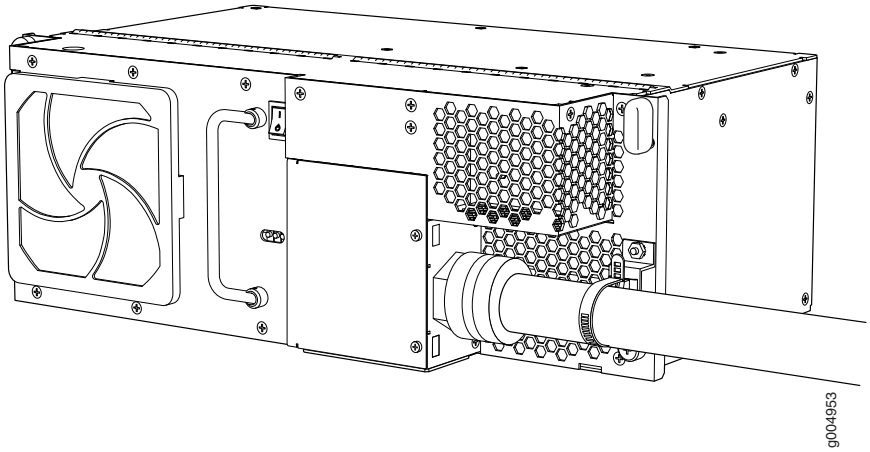

Figure 43 on page 115 shows the three-phase delta AC power supply connections.

Figure 43: Three-Phase Delta AC Power Supply Connections

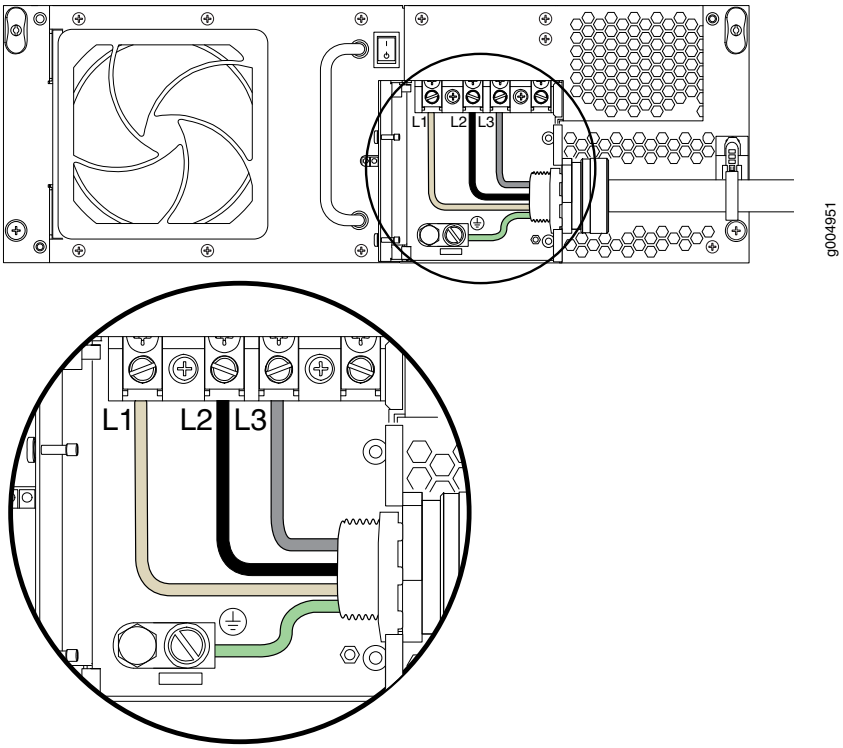

Figure 44 on page 116 shows the three-phase delta AC power cord.

Figure 44: Three-Phase Delta AC Power Cord

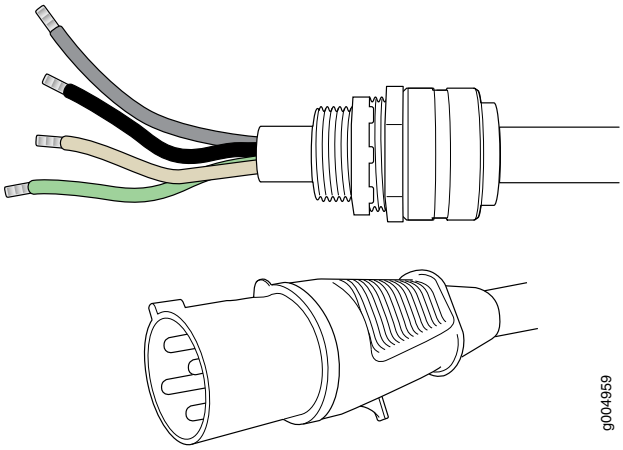

Three-Phase Wye AC Power Supply

Each three-phase wye AC power supply weighs approximately 31.0 lb (14.06 kg). A metal wiring compartment contains the AC terminal block and ground labeled **GND**. The AC terminal block consists of four input terminals labeled **L1**, **L2**, **L3**, and **N**, from left to right. The power switch provides power to the router. Each power supply's cooling system consists of two fans, a front air filter, and a side air filter. LEDs provide the status of the power supply. Figure 45 on page 116 shows the three-phase wye AC power supply.

Figure 45: Three-Phase Wye AC Power Supply

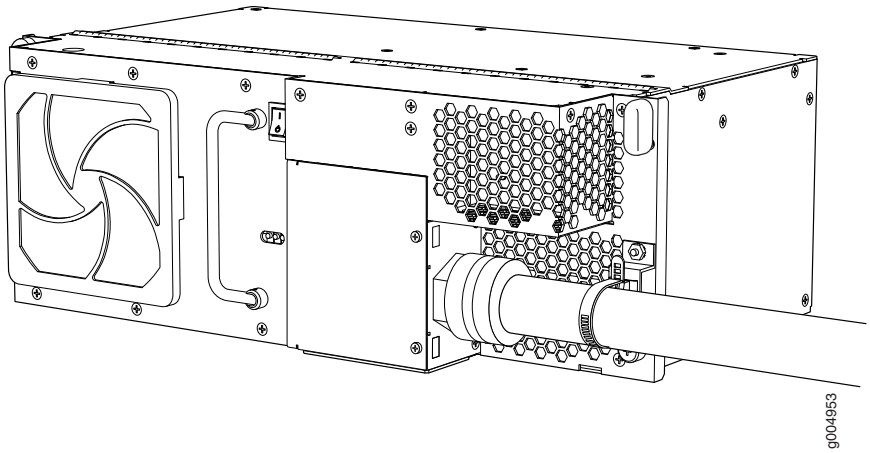

Figure 46 on page 117 shows the three-phase wye AC power supply connections.

Copyright © 2019, Juniper Networks, Inc.

Figure 46: Three-Phase Wye AC Power Supply Connections

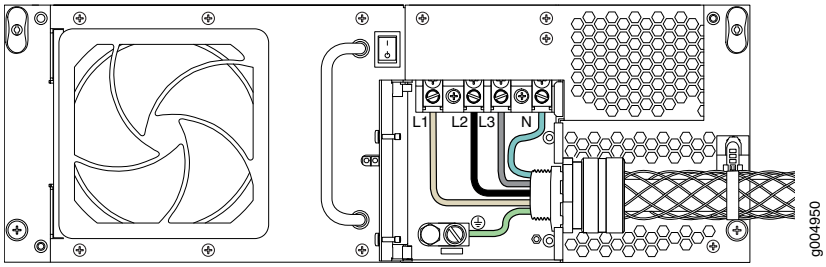

Figure 47 on page 117 shows the three-phase wye AC power cord.

Figure 47: Wye Three-Phase AC Power Cord

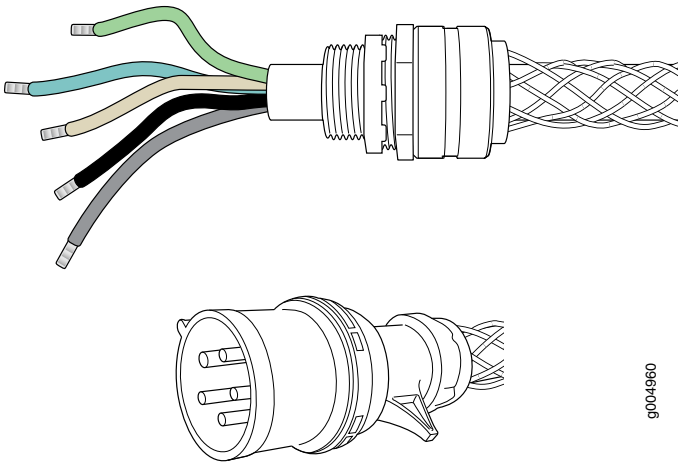

AC Power Supply Load Sharing and Fault Tolerance

When the router is operating normally and both power supplies are switched on, load sharing between them occurs automatically. When one power supply fails or is turned off, the other power supply immediately assumes the entire electrical load for the system. A single power supply can provide full power for as long as the router is operational.

Related Documentation

- T640 Power System Description on page 103
- T640 Three-Phase Delta and Wye AC Power Supply LEDs on page 117
- Troubleshooting the T640 Power System on page 498
- T640 AC Power Requirements on page 145
- T640 AC Power Cord Specifications on page 147

T640 Three-Phase Delta and Wye AC Power Supply LEDs

Figure 48 on page 118 shows the LEDs on each three-phase delta AC power supply faceplate. The three-phase wye AC power supply has the same LEDs. The LEDs in Table 68 on page 118 indicate the status of the power supply. In addition, a power supply failure triggers the red alarm LED on the craft interface.

Figure 48: Delta AC Power Supply LEDs

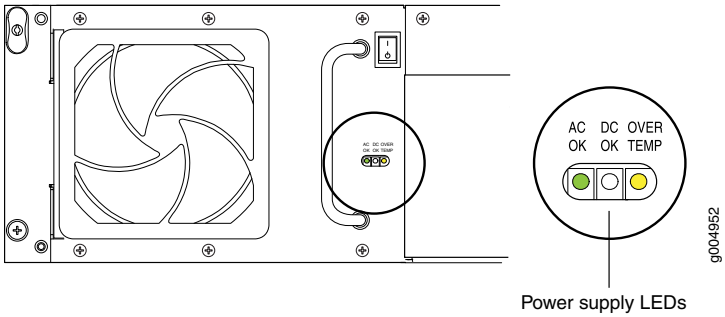

Table 68: Delta AC Power Supply LEDs

LED	Color	State	Description
AC OK—One per power supply	Green	On steadily	The AC terminal block is receiving voltage.
	–	Off	The AC terminal block is not receiving voltage.
DC OK—One per power supply	Blue	On steadily	Power supply is functioning normally.
		Blinking	Power supply is starting up, or is not functioning or operating properly, or is not properly installed.
	–	Off	The power supply fails or the AC terminal block is not receiving voltage.
OVER TEMP—One per power supply	Yellow	On steadily	Power supply has exceeded recommended temperature.
	–	Off	If the **DC OK** and **AC OK** are on steadily, this LED indicates that power supply is within the recommended temperature.

Related Documentation

- T640 Three-Phase Delta and Wye AC Power Supply Description on page 114
- T640 LED Overview on page 486
- Troubleshooting the T640 Power System on page 498
- T640 AC Power Requirements on page 145

Copyright © 2019, Juniper Networks, Inc.

CHAPTER 8

Switch Fabric Components and Descriptions

- T640 Switch Interface Boards (SIBs) Description on page 119

T640 Switch Interface Boards (SIBs) Description

The Switch Interface Boards (SIBs) provide the switching function to the destination FPC (see Figure 49 on page 120).

The SIBs create the switch fabric for the router, providing up to a total of 640 million packets per second (Mpps) of forwarding. Five SIBs are installed in the router. The SIBs are located at the center rear of the chassis in the slots labeled **SIB0** through **SIB4** (top to bottom).

SIBs are hot-insertable and hot-removable.

One of the five SIBs—usually **SIB4**—acts as a backup to the remaining four SIBs. If a SIB fails, the backup SIB becomes active and traffic forwarding continues without any degradation. When the failed SIB is replaced, it becomes the new backup.

Each SIB consists of the following components:

- Switch Fabric ASICs.
- High-speed links (HSLs) to each FPC. See Table 69 on page 119.
- Three LEDs—**ACTIVE**, **OK**, and **FAIL**—located on the SIB faceplate that display the status of the SIB. *T640 Switch Interface Boards (SIBs) LEDs* describes the functions of the SIB LEDs.
- SIB online/offline button, located on the SIB faceplate.

Each T640-SIB also has a fiber-optic adapter for connection to a TX Matrix router. See the *TX Matrix Router Hardware Guide*.

Table 69: Links to the SIBs From the FPCs

FPC Type	Links to SIBs
Type 1 FPC	Each FPC has one dedicated ASIC with five high-speed links that connect to the SIBs (one link per SIB)

Table 69: Links to the SIBs From the FPCs (continued)

FPC Type	Links to SIBs
Type 2 FPC	Each FPC has one dedicated ASIC with five high-speed links that connect to the SIBs (one link per SIB)
Type 3 FPC	Each FPC has two dedicated ASICs, and each ASIC has five high-speed links that connect to the SIBs (a total of 10 links).
Type 4 FPC	Each FPC has one dedicated ASIC with ten high-speed links that connect to the SIBs (two links per SIB).

The T640 router supports these types of SIBs:

- Standard SIB.
- Standard SIB version B (supported in Junos OS Release 7.3 and later)—Required to support the Enhanced Scaling FPCs in a standalone T640 router. If you use one or more Enhanced Scaling FPCs in a T640 router that is not part of a routing matrix, each SIB in the router must be a SIB version B. All the SIBs in the T640 router can be either standard SIB or SIB version B. You cannot use both on the same router at the same time.

Figure 49: Standard SIB or Standard SIB Version B

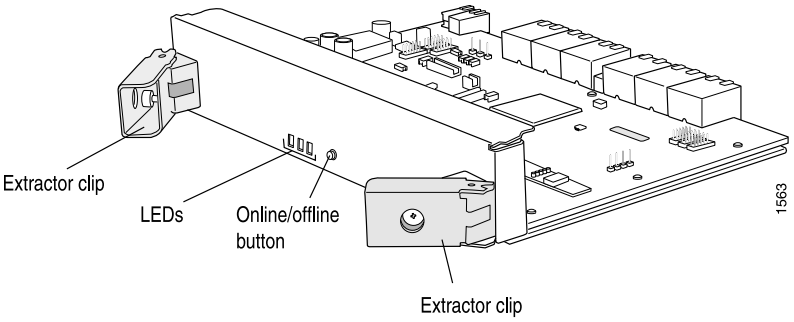

- The T640-SIB (supported in Junos OS Release 7.0 and later) is required to support T640 routers connected to a TX Matrix platform; see Figure 50 on page 120. The T640-SIB supports the Enhanced Scaling FPC4 for T640 routers connected to a TX Matrix platform.

Figure 50: T640-SIB

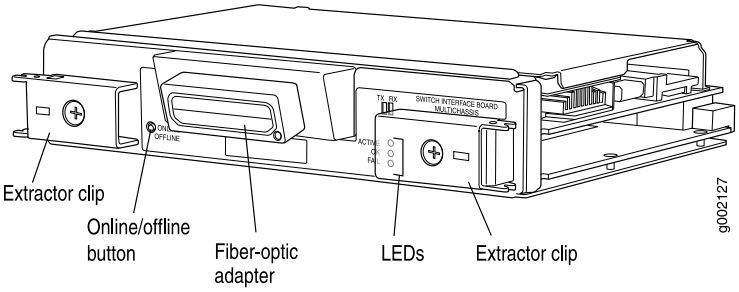

Copyright © 2019, Juniper Networks, Inc.

Related Documentation

- T640 Hardware Component Overview on page 13
- T640 Router Description on page 3
- *T640 Switch Interface Boards (SIBs) LEDs*
- Maintaining the T640 SIBs on page 481
- Replacing a T640 SIB on page 443
- Upgrading to a T640 Standard SIB Version B on page 446

Copyright © 2019, Juniper Networks, Inc.

Copyright © 2019, Juniper Networks, Inc.

PART 2

Site Planning, Preparation, and Specifications

- Preparation Overview on page 125
- DC Power Requirements and Specifications on page 133
- AC Power Requirements and Specifications on page 143
- Network Cable and Transceiver Planning on page 149
- Management Cable Specifications and Pinouts on page 153

Copyright © 2019, Juniper Networks, Inc.

Copyright © 2019, Juniper Networks, Inc.

CHAPTER 9

Preparation Overview

- T640 Site Preparation Checklist on page 125
- T640 Chassis Grounding Cable and Lug Specifications on page 126
- T640 Physical Specifications on page 127
- T640 Rack Requirements on page 128
- T640 Clearance Requirements for Airflow and Hardware Maintenance on page 130
- T640 Environmental Specifications on page 130

T640 Site Preparation Checklist

The checklist in Table 70 on page 125 summarizes the tasks you need to perform when preparing a site for router installation.

Table 70: Site Preparation Checklist

Item or Task	For More Information	Performed By	Date
Environment			
Verify that environmental factors such as temperature and humidity do not exceed router tolerances.	"T640 Environmental Specifications" on page 130		
Power			
Measure distance between external power sources and router installation site.	"T640 DC Power Distribution" on page 138 "T640 DC Power Cable and Lug Specifications" on page 140		
Locate sites for connection of system grounding.	"T640 Chassis Grounding Cable and Lug Specifications" on page 126		
Calculate the power consumption and requirements.	"T640 DC Power System Requirements" on page 136		
Rack			
Verify that your rack meets the minimum requirements for the installation of the router.	"T640 Rack Requirements" on page 128		

Copyright © 2019, Juniper Networks, Inc.

Table 70: Site Preparation Checklist (continued)

Item or Task	For More Information	Performed By	Date
Plan rack location, including required space clearances.	"T640 Clearance Requirements for Airflow and Hardware Maintenance" on page 130		
If a rack is used, secure rack to floor and building structure.	"T640 Rack Requirements" on page 128		
Cables			
Acquire cables and connectors: • Determine the number of cables needed based on your planned configuration. • Review the maximum distance allowed for each cable. Choose the length of cable based on the distance between the hardware components being connected.	"Calculating Power Budget and Power Margin for Fiber-Optic Cables" on page 150		
Plan the cable routing and management.	"Maintaining T640 PICs and PIC Cables" on page 476		

Related Documentation

- T640 Router Installation Summary on page 159
- T640 Installation Safety Guidelines on page 533

T640 Chassis Grounding Cable and Lug Specifications

To meet safety and electromagnetic interference (EMI) requirements and to ensure proper operation, the T640 router must be adequately grounded before power is connected. Two pairs of threaded inserts (PEM nuts) are provided on the right rear of the chassis for connecting the router to earth ground.

CAUTION: **Before router installation begins, a licensed electrician must attach a cable lug to the grounding and power cables that you supply. A cable with an incorrectly attached lug can damage the router.**

To ground the router, connect a grounding cable to earth ground and then attach it to the chassis grounding points using two screws. The left pair of grounding points fits M6 screws (European), and the right pair fits UNC 1/4–20 screws (American). The grounding points are spaced at 0.625-in. (15.86-mm) centers. The accessory box shipped with the router includes the cable lug that attaches to the grounding cable (see Figure 51 on page 127) and two UNC 1/4–20 screws used to secure the grounding cable to the right pair of grounding points. (The cable lug shown in Figure 51 on page 127 is also used for the DC power cables.) The grounding cable must be able to handle up to 152 A. The accessory box shipped with the router includes the cable lug that attaches to the grounding cable (see Figure 51 on page 127).

Copyright © 2019, Juniper Networks, Inc.

Figure 51: T640 DC Power and Grounding Cable Lug

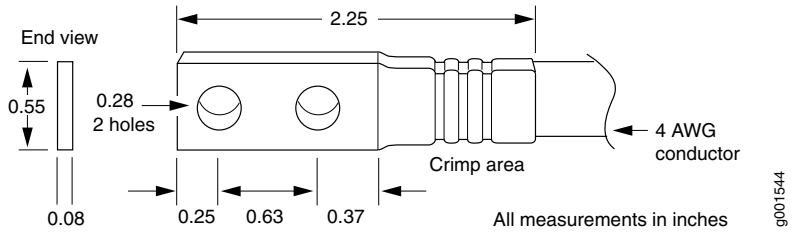

The grounding cable must be 4-AWG (21.2 mm^2), minimum 90ºC wire, or as required by the local code.

Related Documentation

- T640 Chassis Description on page 15
- Connecting the T640 Grounding Cable on page 216
- T640 Preventing Electrostatic Discharge Damage on page 528
- General Electrical Safety Warnings for Juniper Networks Devices on page 552

T640 Physical Specifications

Table 71 on page 127 lists the physical specifications for the T640 router.

Table 71: T640 Physical Specifications

Description	Value
Chassis dimensions	37.45 in. (95.1 cm) high 17.43 in. (44.3 cm) wide 31 in. (78.7 cm) deep. Total depth (including cable management system) 35.5 in. (90.2 cm) 11.5 in. (29.2 cm) from front of chassis to center-mounting brackets
Router weight	Chassis with midplane: 205 lb (93 kg) Minimum configuration: 435 lb (197 kg) Maximum configuration: 565 lb (256.3 kg)
Craft interface weight	2 lb (0.9 kg)
FPC weight	FPC with PICs installed: up to 37 lb (17 kg) FPC without PICs installed: up to 25 lb (11.3 kg) Blank panel in FPC slot: 9 lb (4.0 kg)
CIP weight	8 lb (3.6 kg)

Copyright © 2019, Juniper Networks, Inc.

Table 71: T640 Physical Specifications (continued)

Description	Value
Two-input 160-A DC power supply weight	23 lb (10.5 kg) each
Three-input 240-A DC power supply weight	25 lb (11.3 kg) each
Four-input 240-A DC power supply weight	26.6 lb (12.0 kg)
Six-input DC power supply weight	39.7 lb (18.0 kg)
Air filter weight	1 lb (0.5 kg)
SIB weight	6.8 lb (3.0 kg) each
CB weight	5 lb (2.3 kg) each
SCG weight	1.9 lb (0.9 kg) each
Rear fan tray weight	10 lb (4.5 kg)
Front fan tray weight	18.6 lb (8.4 kg)
Cable management weight	5 lb (2.3 kg)

Related Documentation

- T640 Router Description on page 3
- T640 Chassis Description on page 15
- T640 Installation Safety Guidelines on page 533

T640 Rack Requirements

The T640 Core Router can be installed in a rack or cabinet. Many types of racks are acceptable, including four-post (telco) racks and open-frame racks. An example of an open-frame rack is shown in Figure 52 on page 129.

The router is designed for installation in a 19-in. rack as defined in *Cabinets, Racks, Panels, and Associated Equipment* (document number EIA-310-D) published by the Electronics Industry Association.

With the use of adapters, the router is designed to fit into a 600-mm-wide rack, as defined in the four-part *Equipment Engineering (EE); European telecommunications standard for equipment practice* (document numbers ETS 300 119-1 through 119-4) published by the European Telecommunications Standards Institute (http://www.etsi.org). Use approved wing devices to narrow the opening between the rails.

Copyright © 2019, Juniper Networks, Inc.

The rack rails must be spaced widely enough to accommodate the router chassis's external dimensions: 37.45 in. (95.1 cm) high, 31 in. (78.7 cm) deep, and 17.43 in. (44.3 cm) wide. The outer edges of the mounting brackets extend the width to 19 in. (48.3 cm). The spacing of rails and adjacent racks must also allow for the clearances around the router and rack that are specified in "T640 Clearance Requirements for Airflow and Hardware Maintenance" on page 130.

The chassis height of 37.45 in. (95.1 cm) is approximately 21.4 U. A U is the standard rack unit defined in *Cabinets, Racks, Panels, and Associated Equipment* (document number EIA-310-D) published by the Electronics Industry Association. You can stack two routers in a rack that has at least 42.8 U (74.9 in. or 1.90 m) of usable vertical space.

The rack must be strong enough to support the weight of the fully configured router, up to approximately 565 lb (256.3 kg). If you stack two fully configured routers in one rack, it must be capable of supporting about 1130 lb (512.6 kg).

Figure 52: Typical Open-Frame Rack

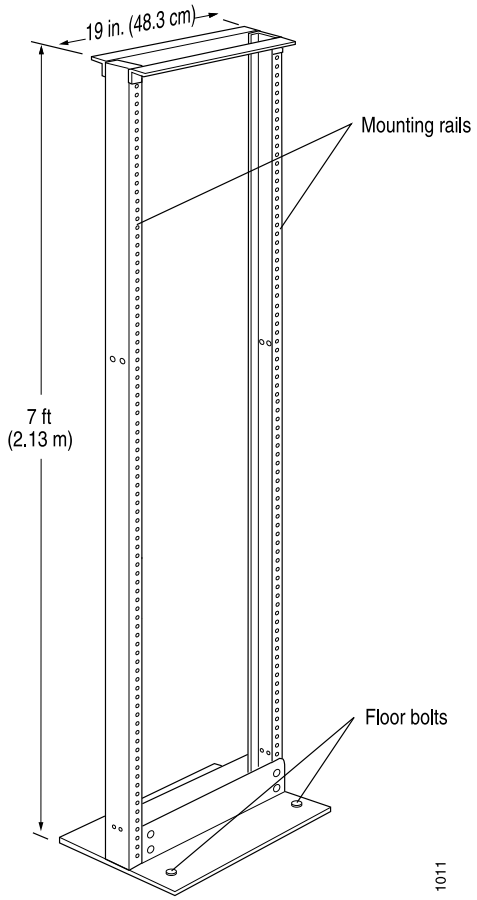

Always secure the rack to the structure of the building. If your geographical area is subject to earthquakes, bolt the rack to the floor. For maximum stability, also secure the rack to ceiling brackets.

Related Documentation

- T640 Chassis Description on page 15
- Installing the T640 Mounting Hardware for a Four-Post Rack or Cabinet on page 167
- Installing the T640 Mounting Hardware for an Open-Frame Rack on page 170

T640 Clearance Requirements for Airflow and Hardware Maintenance

When planning the installation site, you need to allow sufficient clearance around the rack (see Figure 53 on page 130):

- For the cooling system to function properly, the airflow around the chassis must be unrestricted. Figure 15 on page 32 depicts the airflow in the router.

  NOTE: **If you mount the router in a cabinet, be sure that ventilation is sufficient to prevent overheating.**

- For service personnel to remove and install hardware components, there must be adequate space at the front and back of the router. At least 24 in. (61 cm) is required both in front of and behind the router. NEBS GR-63 recommends that you allow at least 30 in. (72.6 cm) in front of the rack and 24 in. (61.0 cm) behind the rack.

Figure 53: T640 Chassis Dimensions and Clearance Requirements

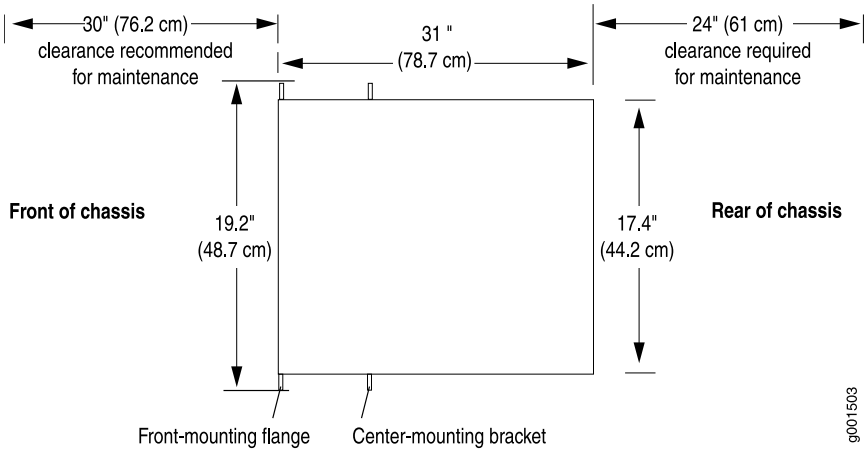

Related Documentation

- T640 Chassis Description on page 15
- T640 Cooling System Description on page 31
- T640 Physical Specifications on page 127

T640 Environmental Specifications

Table 72 on page 131 specifies the environmental specifications required for normal router operation. In addition, the site should be as dust-free as possible.

Copyright © 2019, Juniper Networks, Inc.

Table 72: Router Environmental Specifications

Description	Value
Altitude	No performance degradation to 10,000 ft (3048 m)
Relative humidity	Normal operation ensured in relative humidity range of 5% to 90%, noncondensing
Temperature	Normal operation ensured in temperature range of 32ºF (0ºC) to 104ºF (40ºC) Nonoperating storage temperature in shipping crate: –40ºF (–40ºC) to 158ºF (70ºC)
Seismic	Designed to meet Telcordia Technologies Zone 4 earthquake requirements
Maximum thermal output	DC power: 28,498 BTU/hour (8350 W)

NOTE: Install the router only in restricted areas, such as dedicated equipment rooms and equipment closets, in accordance with Articles 110-16, 110-17, and 110-18 of the National Electrical Code, ANSI/NFPA 70.

Related Documentation

- T640 Cooling System Description on page 31
- Maintaining the T640 Air Filters on page 464
- Maintaining the T640 Fan Trays on page 465
- Troubleshooting the T640 Cooling System on page 491
- T640 General Electrical Safety Guidelines and Electrical Codes on page 551
- Compliance Statements for Environmental Requirements on page 566

Copyright © 2019, Juniper Networks, Inc.

Copyright © 2019, Juniper Networks, Inc.

CHAPTER 10

DC Power Requirements and Specifications

- T640 DC Power System Electrical Specifications on page 133
- T640 DC Power Supply Electrical Specifications on page 134
- T640 DC Power System Requirements on page 136
- T640 DC Power Distribution on page 138
- T640 DC Power Cable and Lug Specifications on page 140

T640 DC Power System Electrical Specifications

Table 73 on page 133 lists the power system electrical specifications.

Table 73: T640 Power System Electrical Specifications

Item	Specification
DC input voltage	Operating range: –40.0 to –72.0 VDC NOTE: If the input voltage from the DC power source drops below –37.5 to –39.5 VDC, the router automatically shuts down. During automatic shutdown, the circuit remains active. When the input voltage returns to –43.0 to –44.0 VDC, the router automatically starts up again and the system returns to normal operation within 30 minutes. No operator intervention is required.
DC system current rating	152 A @ –48 VDC (nominal) (7296 W)

Related Documentation

- T640 Power System Description on page 103
- T640 DC Power Supply Electrical Specifications on page 134
- T640 DC Power System Requirements on page 136
- Maintaining the T640 Power Supplies on page 477
- T640 General Electrical Safety Guidelines and Electrical Codes on page 551

T640 DC Power Supply Electrical Specifications

Use a customer site circuit breaker for each power supply input. We recommend that you provision a circuit breaker for each DC power supply input rated for at least 125% of the continuous current that the input draws at –48 VDC, or as required by local code.

Table 74 on page 134 lists the power supply electrical specifications for the two-input 160-A DC power supply.

Table 74: T640 Two-Input 160-A DC Power Supply Electrical Specifications

Item	Specification
DC input voltage	Nominal –48 VDC, –60 VDC Operating range: –40.5 to –72 VDC NOTE: If the input voltage from the DC power source drops below –40.5 VDC, the router automatically shuts down. During automatic shutdown, the circuit remains active. When the input voltage returns to –42.75 VDC, the router automatically starts up again and the system returns to normal operation within 30 minutes. No operator intervention is required.
Input DC current rating	68 A @ –48 VDC (nominal) for each input (3264 W)

Table 75 on page 134 lists the power supply electrical specifications for the three-input 240-A DC power supply in **2–INPUT** mode.

Table 75: T640 Three-Input 240-A DC Power Supply Electrical Specifications

Item	Specification
DC input voltage	Nominal –48 VDC, –60 VDC Operating range: –40.0 to –72.0 VDC NOTE: If the input voltage from the DC power source drops below –37.5 to –39.5 VDC, the router automatically shuts down. During automatic shutdown, the circuit remains active. When the input voltage returns to –43.0 to –44.00 VDC, the router automatically starts up again and the system returns to normal operation within 30 minutes. No operator intervention is required.
Input DC current rating	Input 0: 67 A @ –48 VDC (nominal) (3216 W) Input 1: 67 A @ –48 VDC (nominal) (3216 W) NOTE: For a T640 router, do not use **INPUT 2** on a three-input 240-A DC power supply.

Table 76 on page 135 lists the power supply electrical specifications for the four-input 240-A DC power supply.

Copyright © 2019, Juniper Networks, Inc.

Table 76: Four-Input 240-A DC Power Supply Electrical Specifications

Item	Specification
DC input voltage	Nominal –48 VDC, –60 VDC Operating range: –40.0 to –72.0 VDC NOTE: If the input voltage from the DC power source drops below -37.5 to -39.5 VDC, the router automatically shuts down. During automatic shutdown, the circuit remains active. When the input voltage returns to –43.0 to –44.00 VDC, the router automatically starts up again and the system returns to normal operation within 30 minutes. No operator intervention is required.
Input DC current rating	Input 0: 47 A @ –48 VDC (nominal) (2256 W) Input 1: 44 A @ –48 VDC (nominal) (2112 W) Input 2: 50 A @ –48 VDC (nominal) (2400 W) Input 3: 50 A @ –48 VDC (nominal) (2400 W)

Table 77 on page 135 lists the six-input DC power supply electrical specifications.

Table 77: Six-Input DC Power Supply Electrical Specifications

Item	Specification
DC input voltage	Nominal –48 VDC, –60 VDC Operating range: –40.0 to –72.0 VDC NOTE: If the input voltage from the DC power source drops below -37.5 to -39.5 VDC, the router automatically shuts down. During automatic shutdown, the circuit remains active. When the input voltage returns to –43.0 to –44.00 VDC, the router automatically starts up again and the system returns to normal operation within 30 minutes. No operator intervention is required.
Input DC current rating	Input 0: 45 A @ –48 VDC (nominal) (2160 W) Input 1: 56 A @ –48 VDC (nominal) (2448 W) Input 2: 56 A @ –48 VDC (nominal) (2448 W) Input 3: 56 A @ –48 VDC (nominal) (2448 W) Input 4: 56 A @ –48 VDC (nominal) (2448 W) Input 5: 56 A @ –48 VDC (nominal) (2448 W)

Related Documentation

- T640 Power System Description on page 103
- T640 DC Power System Electrical Specifications on page 133

- T640 DC Power System Requirements on page 136
- Maintaining the T640 Power Supplies on page 477
- T640 General Electrical Safety Guidelines and Electrical Codes on page 551

T640 DC Power System Requirements

To allow for future growth so that you can operate the T640 router in any hardware configuration without upgrading the power infrastructure, we recommend that you provision the following per each input. Doing so enables you to operate the router in any configuration without upgrading the power infrastructure.

- 68 A @ –48 VDC (nominal) for each power supply input on a two-input 160-A DC power supply
- 67 A @ –48 VDC (nominal) for input 0 and 67 A @ –48 VDC for input 1 on a three-input 240-A DC power supply
- 50 A @ –48 VDC (nominal) for each power supply input on a four-input 240-A DC power supply
- 56 A @ –48 VDC (nominal) for each power supply input on a four-input 240-A DC power supply

If you do not plan to allow for future growth, you can use the information in Table 1 to calculate the typical power consumption @ –48 VDC and typical thermal output for your current hardware configuration. Table 78 on page 136 lists the power requirements for various hardware components when the router is operating under typical voltage conditions.

Table 78: T640 Component DC Power Requirements

Component	Current Requirement (Amps @ –48 VDC)
Base system, not including FPCs and PICs (includes five SIBs, one host subsystem, one SCG, cooling system, and craft interface), and two DC power supplies	16.9 A
SIB: Standard SIB, standard SIB version B, or T640-SIB	0.8 A
Enhanced FPC1 and Enhanced II FPC1	3.4 A
Enhanced Scaling FPC1	7.1 A
FPC2, Enhanced FPC2, and Enhanced II FPC2	3.4 A
Enhanced Scaling FPC2	7.5 A
FPC3, Enhanced FPC3, and Enhanced II FPC3	6.8 A
Enhanced Scaling FPC3	9.1 A

Copyright © 2019, Juniper Networks, Inc.

Table 78: T640 Component DC Power Requirements (continued)

Component	Current Requirement (Amps @ –48 VDC)
Type 4 FPC	8.2 A
T640 Enhanced Scaling FPC4-1P	7.0 A
Host subsystem (Routing Engine and control board)	2.6 A
SCG	0.2 A
Power supply	1.7 A
Cooling system (normal speed)	6.7 A
Cooling system (full speed)	22 A
Craft interface	0.2 A
PIC—Generalized typical value	0.625 A
PIC (Type 3)—Generalized maximum value	1.2 A
PIC (Type 4)—Generalized maximum value	3.3 A

These examples use generalized values for PICs. For PIC power requirements, see the *T640 Core Router Interface Module Reference*.

- Example of calculating power consumption for a minimum configuration under typical voltage conditions:

  Base System + 1 FPC3 + 1 PIC =
  16.9 A + 6.8 A + 0.625 A = 24.3 A @ –48 VDC = 1,166 W

- Example of calculating power consumption for a maximum configuration under typical voltage conditions:

  Base System + 8 Enhanced Scaling FPC3 + 1 Host + 1 SCG + 32 PICs =
  16.9 A + 8(9.1 A) + 2.6 A + 0.2 A + 32(1.2 A) =
  16.9 A + 72.8 A + 2.6 A + 0.2 A + 38.4 A = 130.9 A @ –48 VDC = 6283 W

- Current requirement adjustment for fans running at full speed (high temperature environment or cooling component failure):

  Calculated system current (X) – Cooling (normal) + Cooling (full speed) =
  X A – 6.7 A + 22 A = X A + 15.3 A

Copyright © 2019, Juniper Networks, Inc.

- Input current from a DC source other than –48 VDC (based on maximum configuration):

  (–54 VDC input) x (input current X) = (–48 VDC) x (input current Y)
  54 x X = 48 x 94.1 A
  X = 48 x 94.1 A/54 = 83.6 A

- Example of calculating system thermal output:

  Watts DC/0.293 = BTU/hr
  6283/0.293 = 21,444 BTU/hr

Related Documentation

- T640 Power System Description on page 103
- T640 DC Power System Electrical Specifications on page 133
- T640 DC Power Supply Electrical Specifications on page 134
- T640 General Electrical Safety Guidelines and Electrical Codes on page 551

T640 DC Power Distribution

Most sites distribute DC power through a main conduit that leads to frame-mounted DC power distribution panels, one of which might be located at the top of the rack that houses the router. A pair of cables (one input and one return) connects each set of terminal studs to the power distribution panel.

NOTE: All inputs on the two-input 160-A DC power supply in slot **PEM0** must be powered by dedicated power feeds derived from feed A, and all inputs on the two-input 160-A DC power supply in slot **PEM1** must be powered by dedicated power feeds derived from feed B. This configuration provides the commonly deployed A/B feed redundancy for the system.

NOTE: **INPUT 0** and **INPUT 1** on the three-input 240-A DC power supply in slot **PEM0** must be powered by dedicated power feeds derived from feed A, and **INPUT 0** and **INPUT 1** on the three-input 240-A DC power supply in slot **PEM1** must be powered by dedicated power feeds derived from feed B. This configuration provides the commonly deployed A/B feed redundancy for the system.

NOTE: All inputs on the four-input 240-A DC power supply in slot **PEM0** must be powered by dedicated power feeds derived from feed A, and all inputs on the four-input 240-A DC power supply in slot **PEM1** must be powered by dedicated power feeds derived from feed B. This configuration provides the commonly deployed A/B feed redundancy for the system.

Copyright © 2019, Juniper Networks, Inc.

NOTE: All inputs on the six-input DC power supply in slot PEM0 must be powered by dedicated power feeds derived from feed A, and all inputs on the six-input DC power supply in slot PEM1 must be powered by dedicated power feeds derived from feed B. This configuration provides the commonly deployed A/B feed redundancy for the system.

Figure 54 on page 139 and Figure 55 on page 139 shows a typical DC source cabling arrangement.

Figure 54: Typical DC Source Cabling from PEM0 to Feed A

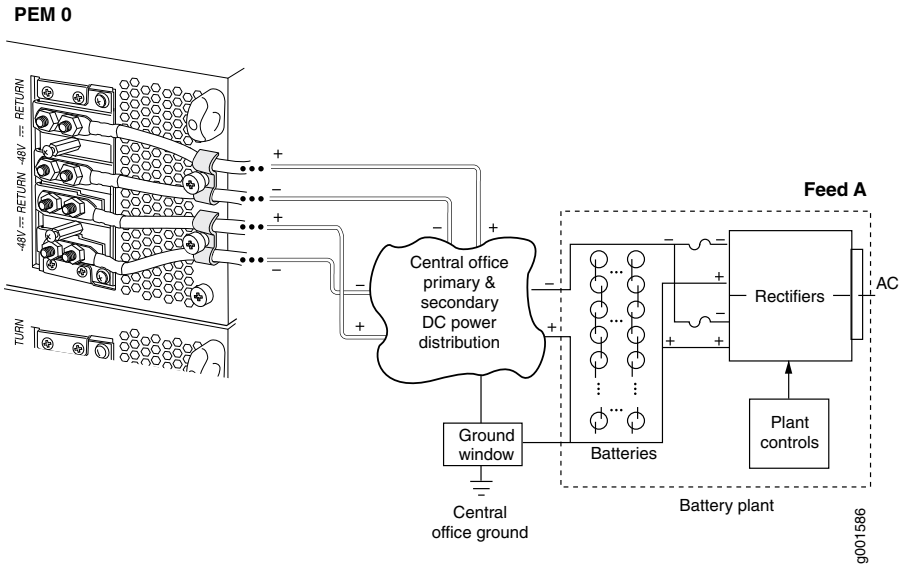

Figure 55: Typical DC Source Cabling from PEM1 to Feed B

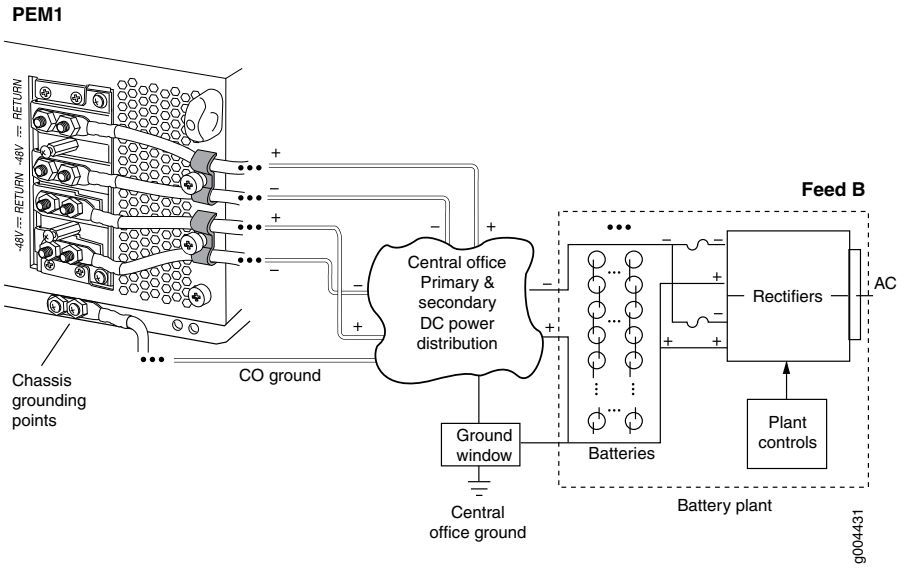

Related Documentation

- T640 Power System Description on page 103
- T640 DC Power System Electrical Specifications on page 133
- T640 DC Power Supply Electrical Specifications on page 134
- T640 General Electrical Safety Guidelines and Electrical Codes on page 551

T640 DC Power Cable and Lug Specifications

The accessory box shipped with the T640 router includes eighteen 4-AWG (21.2 mm^2) cable lugs for the DC cables that attach to the terminal studs of each power supply (see Figure 56 on page 140). the number of DC cables and cable lugs required varies depending on the power supply (see Table 79 on page 140). Each DC power cable requires one cable lug. One cable lug shown is also used for the grounding the chassis.

CAUTION: **Before router installation begins, a licensed electrician must attach a cable lug to the power cables that you supply. A cable with an incorrectly attached lug can damage the router.**

Figure 56: T640 DC Power Cable Lug

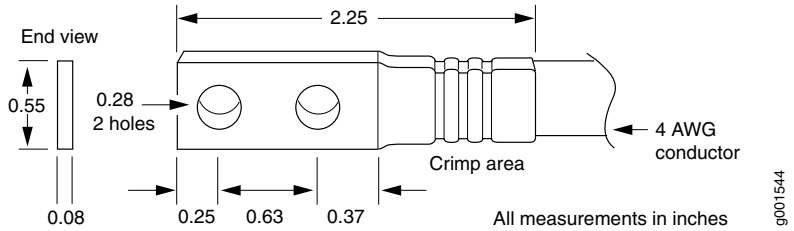

Table 79: Number of Cables Required

Power Supply	Number of DC Cables per Power Supply
2-input 160-A DC power supply	4
3-input 240-A DC power supply	6
4-input 240-A DC power supply	8

Table 80: T640 Power Cable Specifications

Quantity and Specification	Connector Specification
Eight 4-AWG (21.2 mm^2) (minimum) copper conductor, or as required by the local code.	Cable lug; dual hole, sized to fit 1/4-20 UNC terminal studs at 15.86-mm (0.625-in.) center line.

Copyright © 2019, Juniper Networks, Inc.

WARNING: For field-wiring connections, use copper conductors only.

For other electrical safety information, see "T640 General Electrical Safety Guidelines and Electrical Codes" on page 551.

CAUTION: You must ensure that power connections maintain the proper polarity. The power source cables might be labeled (+) and (–) to indicate their polarity. There is no standard color coding for DC power cables. The color coding used by the external DC power source at your site determines the color coding for the leads on the power cables that attach to the terminal studs on each power supply.

CAUTION: Power cables must not block access to router components or drape where people could trip on them.

Related Documentation

- T640 Power System Description on page 103
- T640 DC Power System Electrical Specifications on page 133
- T640 DC Power Supply Electrical Specifications on page 134
- T640 General Electrical Safety Guidelines and Electrical Codes on page 551

Copyright © 2019, Juniper Networks, Inc.

Copyright © 2019, Juniper Networks, Inc.

CHAPTER 11

AC Power Requirements and Specifications

- T640 AC Power System Specifications on page 143
- T640 Three-Phase Delta AC Power Supply Specifications on page 144
- T640 Three-Phase Wye AC Power Supply Specifications on page 144
- T640 AC Power Requirements on page 145
- T640 AC Power Cord Specifications on page 147

T640 AC Power System Specifications

Table 81 on page 143 lists the AC power system electrical specifications.

Table 81: T640 AC Power System Electrical Specifications

Item	Specification
AC input voltage	Delta operating range: 200 - 240 VAC (line-to-line) (nominal) Wye operating range: 346 - 415 VAC (line-to-line) (nominal)
AC input line frequency	Delta 60 Hz (nominal) Wye: 50 Hz (nominal)
AC system current rating	Delta: 34 A @ 200 VAC (line-to-line) Wye: 20 A @ 346 VAC (line-to-line)
AC system input power	Delta: 11765 W Wye: 11765 W

Related Documentation

- T640 Three-Phase Delta and Wye AC Power Supply Description on page 114
- T640 Three-Phase Delta AC Power Supply Specifications on page 144
- T640 Three-Phase Wye AC Power Supply Specifications on page 144
- T640 AC Power Electrical Safety Guidelines on page 559

T640 Three-Phase Delta AC Power Supply Specifications

Table 82 on page 144 lists the three-phase delta AC power supply electrical specifications.

Table 82: Three-Phase Delta AC Power Supply Electrical Specifications

Item	Specification
Maximum output power	10,000 W
AC input voltage	Operating range: 200 – 240 VAC (line-to-line) (nominal)
AC input line frequency	60 Hz (nominal)
AC input current rating	28.3 A @ 240 VAC maximum (line-to-line)
Maximum input	11,765 W per input

Related Documentation

- T640 Three-Phase Delta and Wye AC Power Supply Description on page 114
- Connecting AC Power to a T640 Router with Three-Phase Delta AC Power Supplies on page 249
- T640 AC Power Electrical Safety Guidelines on page 559
- T640 AC Power Cord Specifications on page 147

T640 Three-Phase Wye AC Power Supply Specifications

Table 83 on page 144 lists the three-phase wye AC power supply electrical specifications.

Table 83: Three-Phase Wye AC Power Supply Electrical Specifications

Item	Specification
Maximum output power	10,000 W
AC input voltage	Operating range: 346 – 415 VAC (line-to-line) (nominal)
AC input line frequency	50 Hz (nominal)
AC input current rating	16.4 A @ 415 VAC maximum (line-to-line)
Maximum input	11,775 W per input

Related Documentation

- T640 Three-Phase Delta and Wye AC Power Supply Description on page 114
- Connecting AC Power to a T640 Router with Three-Phase Wye AC Power Supplies on page 252

Copyright © 2019, Juniper Networks, Inc.

- T640 AC Power Electrical Safety Guidelines on page 559
- T640 AC Power Cord Specifications on page 147

T640 AC Power Requirements

To allow for future growth so that you can operate the router in any hardware configuration without upgrading the power infrastructure, we recommend that you provision 11,765 W per each three-phase delta AC power supply or 11,775 W per each three-phase wye AC power supply.

If you do not plan to provision 11,765 W per each three-phase delta AC power supply or 11,775 W per each three-phase wye AC power supply, you can use the information in Table 84 on page 145, Table 85 on page 145 and the *T640 Core Router Interface Module Reference* to calculate power consumption for various hardware configurations, input current from a different source voltage, and thermal output, as shown in the following examples for an AC-powered router.

Table 84 on page 145 lists the power requirements for various hardware components when the router is operating under typical voltage conditions. For power requirements for specific PICs, see the *T640 Core Router Interface Module Reference*.

Table 84: T640 Base AC Power Requirements

Component	Power Requirement (Watts)
Base system, not including FPCs and PICs (includes five SIBs, one host subsystem (T-CB and 600, 1600, or 2000 Routing Engine), one SCG, cooling system at normal speed, and craft interface), and two AC power supplies	954 W

Table 85: Typical AC Power Requirements for T640 Components

Component	Power Requirement (Watts)	Power Requirement (Watts) with 85% Efficiency
SIB: Standard SIB, standard SIB version B, or T640-SIB	38 W	44 W
Enhanced II FPC1	163.2 W	192 W
Enhanced Scaling FPC1	340.8 W	401 W
FPC2 and Enhanced II FPC2	163.2 W	192 W
FPC3 and Enhanced II FPC3	326.4 W	384 W
Enhanced Scaling FPC3	437.28 W	514 W
T640 Enhanced Scaling FPC4	393.6 W	463 W

Copyright © 2019, Juniper Networks, Inc.

Table 85: Typical AC Power Requirements for T640 Components (continued)

Component	Power Requirement (Watts)	Power Requirement (Watts) with 85% Efficiency
Host subsystem (600, 1600, or 2000 Routing Engine and T-CB)	124.8 W	147 W
SCG	9.6 W	11 W
Redundant backup three-phase delta AC power supply	Not applicable	91 W
Redundant backup three-phase wye AC power supply	Not applicable	91 W
Cooling system (full speed – normal speed)	1056 W — 321.6 W = 734.4 W	864 W
Craft interface	9.6 W	11 W
PIC —Generalized typical value	30 W	35 W
PIC (Type 3)—Generalized maximum value	57.6 W	68 W
PIC (Type 4)—Generalized maximum value	158.4 W	186 W

- Example of calculating typical power consumption for minimum configuration:

  Base System + 1 FPC3 + 1 PIC =
  954 W + 384 W + 35 W= 2193 W

- Example of calculating typical power consumption for maximum configuration:

  Base System +8 Enhanced Scaling FPC3 + 1 Host subsystem + 1 SCG + 32 PICs + fan tray (full speed – normal speed) =
  954 W + 8 (514 W) + 147 W + 11 W + 32 (68 W) + 864 W =
  954 W + 4112 W + 147 W + 11 W + 2176 W + 864 W = 8264 W

- Example of calculating system thermal output:

  Watts DC/0.293 = BTU/hr
  8264/0.293 = 28,205 BTU/hr

Related Documentation

- T640 Power System Description on page 103
- T640 AC Power System Specifications on page 143
- T640 Three-Phase Delta AC Power Supply Specifications on page 144
- T640 Three-Phase Wye AC Power Supply Specifications on page 144

Copyright © 2019, Juniper Networks, Inc.

• T640 AC Power Cord Specifications on page 147

T640 AC Power Cord Specifications

Most sites distribute power through a main conduit that leads to frame-mounted power distribution panels, one of which can be located at the top of the rack that houses the router. An AC power cord connects each power supply to the power distribution panel.

Each AC power supply has a metal wiring compartment that contains the AC terminal block and ground labeled **GND**. The wye AC terminal block consists of four input terminals labeled **L1**, **L2**, **L3**, and **N**, from left to right. The delta AC terminal block consists of three input terminals labeled **L1**, **L2**, and **L3**, from left to right.

Detachable AC power cords, each 4.5 m (approximately 14.8 ft) long, are supplied with the router. The AC power cord wires insert into the AC input terminals in the AC terminal block by screwdriver. The plug end of the power cord fits into the power source receptacle for your geographical location.

Table 86 on page 147 provides specifications and Figure 57 on page 147 and Figure 58 on page 148 depict the plug on the AC power cord provided for each region supported.

Table 86: Three-Phase Delta and Wye AC Power Cord Specifications

Country	Model Number	Electrical Specification	Plug Type	Plug Color
Europe	CBL-T-PWR-STR-WYE	32 A, 400 VAC	IEC 60309	Red
North America	CBL-T-PWR-STR-DELTA	60 A, 250 VAC	IEC 60309	Blue

Figure 57: Three-Phase Delta AC Power Cord

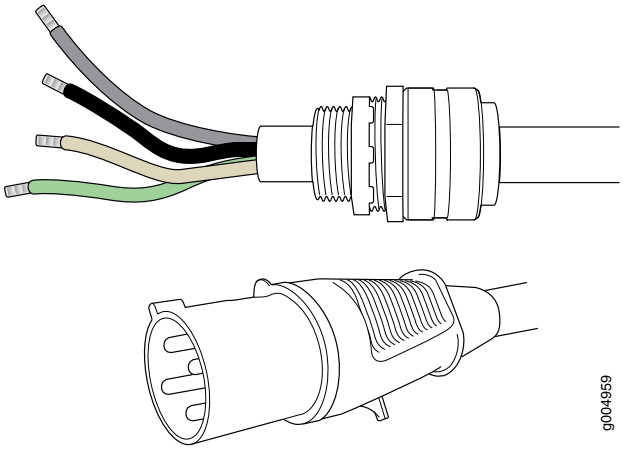

Figure 58: Three-Phase Wye AC Power Cord

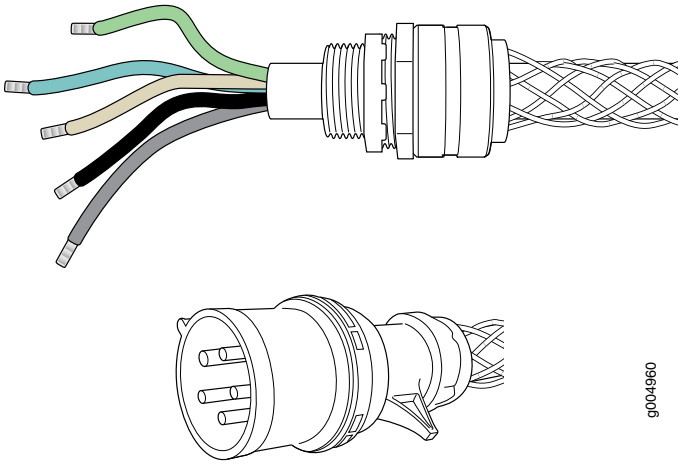

NOTE: In North America, AC power cords must not exceed 4.5 m (approximately 14.75 ft) in length, to comply with National Electrical Code (NEC) Sections 400-8 (NFPA 75, 5-2.2) and 210-52, and Canadian Electrical Code (CEC) Section 4-010(3). The cords supplied with the router are in compliance.

WARNING: The router is pluggable type A equipment installed in a restricted-access location. It has a separate protective earthing terminal (sized for UNC 1/4-20 ground lugs) provided on the chassis in addition to the grounding pin of the power supply cord. This separate protective earthing terminal must be permanently connected to earth.

CAUTION: Power cords and cables must not block access to device components or drape where people could trip on them.

Related Documentation

- Connecting AC Power to a T640 Router with Three-Phase Wye AC Power Supplies on page 252
- Connecting AC Power to a T640 Router with Three-Phase Delta AC Power Supplies on page 249
- Replacing a T640 Three-Phase Delta AC Power Supply Cord on page 420
- Replacing a T640 Three-Phase Wye AC Power Supply Cord on page 433
- T640 Three-Phase Delta AC Power Supply Specifications on page 144
- T640 Three-Phase Wye AC Power Supply Specifications on page 144

Copyright © 2019, Juniper Networks, Inc.

CHAPTER 12

Network Cable and Transceiver Planning

- Understanding Fiber-Optic Cable Signal Loss, Attenuation, and Dispersion on page 149
- Calculating Power Budget and Power Margin for Fiber-Optic Cables on page 150

Understanding Fiber-Optic Cable Signal Loss, Attenuation, and Dispersion

This topic describes signal loss, attenuation, and dispersion in fiber-optic cable.

- Signal Loss in Multimode and Single-Mode Fiber-Optic Cable on page 149
- Attenuation and Dispersion in Fiber-Optic Cable on page 149

Signal Loss in Multimode and Single-Mode Fiber-Optic Cable

Multimode fiber is large enough in diameter to allow rays of light to reflect internally (bounce off the walls of the fiber). Interfaces with multimode optics typically use LEDs as light sources. However, LEDs are not coherent sources. They spray varying wavelengths of light into the multimode fiber, which reflects the light at different angles. Light rays travel in jagged lines through a multimode fiber, causing signal dispersion. When light traveling in the fiber core radiates into the fiber cladding, higher-order mode loss results. Together these factors limit the transmission distance of multimode fiber compared with single-mode fiber.

Single-mode fiber is so small in diameter that rays of light can reflect internally through one layer only. Interfaces with single-mode optics use lasers as light sources. Lasers generate a single wavelength of light, which travels in a straight line through the single-mode fiber. Compared with multimode fiber, single-mode fiber has higher bandwidth and can carry signals for longer distances.

Exceeding the maximum transmission distances can result in significant signal loss, which causes unreliable transmission.

Attenuation and Dispersion in Fiber-Optic Cable

Correct functioning of an optical data link depends on modulated light reaching the receiver with enough power to be demodulated correctly. *Attenuation* is the reduction in power of the light signal as it is transmitted. Attenuation is caused by passive media components, such as cables, cable splices, and connectors. Although attenuation is significantly lower for optical fiber than for other media, it still occurs in both multimode

Copyright © 2019, Juniper Networks, Inc.

and single-mode transmission. An efficient optical data link must have enough light available to overcome attenuation.

Dispersion is the spreading of the signal over time. The following two types of dispersion can affect an optical data link:

- Chromatic dispersion—Spreading of the signal over time resulting from the different speeds of light rays.
- Modal dispersion—Spreading of the signal over time resulting from the different propagation modes in the fiber.

For multimode transmission, modal dispersion, rather than chromatic dispersion or attenuation, usually limits the maximum bit rate and link length. For single-mode transmission, modal dispersion is not a factor. However, at higher bit rates and over longer distances, chromatic dispersion rather than modal dispersion limits maximum link length.

An efficient optical data link must have enough light to exceed the minimum power that the receiver requires to operate within its specifications. In addition, the total dispersion must be less than the limits specified for the type of link in Telcordia Technologies document GR-253-CORE (Section 4.3) and International Telecommunications Union (ITU) document G.957.

When chromatic dispersion is at the maximum allowed, its effect can be considered as a power penalty in the power budget. The optical power budget must allow for the sum of component attenuation, power penalties (including those from dispersion), and a safety margin for unexpected losses.

Calculating Power Budget and Power Margin for Fiber-Optic Cables

Use the information in this topic and the specifications for your optical interface to calculate the power budget and power margin for fiber-optic cables.

TIP: You can use the Hardware Compatibility Tool to find information about the pluggable transceivers supported on your Juniper Networks device.

To calculate the power budget and power margin, perform the following tasks:

1. Calculating Power Budget for Fiber-Optic Cable on page 150
2. Calculating Power Margin for Fiber-Optic Cable on page 151

Calculating Power Budget for Fiber-Optic Cable

To ensure that fiber-optic connections have sufficient power for correct operation, you need to calculate the link's power budget, which is the maximum amount of power it can transmit. When you calculate the power budget, you use a worst-case analysis to provide a margin of error, even though all the parts of an actual system do not operate at the worst-case levels. To calculate the worst-case estimate of power budget (P_B), you assume minimum transmitter power (P_T) and minimum receiver sensitivity (P_R):

 Copyright © 2019, Juniper Networks, Inc.

$P_B = P_T - P_R$

The following hypothetical power budget equation uses values measured in decibels (dB) and decibels referred to one milliwatt (dBm):

$P_B = P_T - P_R$

$P_B = -15 \text{ dBm} - (-28 \text{ dBm})$

$P_B = 13 \text{ dB}$

Calculating Power Margin for Fiber-Optic Cable

After calculating a link's power budget, you can calculate the power margin (P_M), which represents the amount of power available after subtracting attenuation or link loss (LL) from the power budget (P_B). A worst-case estimate of P_M assumes maximum LL:

$P_M = P_B - LL$

P_M greater than zero indicates that the power budget is sufficient to operate the receiver.

Factors that can cause link loss include higher-order mode losses, modal and chromatic dispersion, connectors, splices, and fiber attenuation. Table 87 on page 151 lists an estimated amount of loss for the factors used in the following sample calculations. For information about the actual amount of signal loss caused by equipment and other factors, refer to vendor documentation.

Table 87: Estimated Values for Factors Causing Link Loss

Link-Loss Factor	Estimated Link-Loss Value
Higher-order mode losses	Single mode—None Multimode—0.5 dB
Modal and chromatic dispersion	Single mode—None Multimode—None, if product of bandwidth and distance is less than 500 MHz-km
Connector	0.5 dB
Splice	0.5 dB
Fiber attenuation	Single mode—0.5 dB/km Multimode—1 dB/km

The following sample calculation for a 2-km-long multimode link with a power budget (P_B) of 13 dB uses the estimated values from Table 87 on page 151 to calculate link loss (LL) as the sum of fiber attenuation (2 km @ 1 dB/km, or 2 dB) and loss for five connectors (0.5 dB per connector, or 2.5 dB) and two splices (0.5 dB per splice, or 1 dB) as well as higher-order mode losses (0.5 dB). The power margin (P_M) is calculated as follows:

$P_M = P_B - LL$

$P_M = 13\ dB - 2\ km\ (1\ dB/km) - 5\ (0.5\ dB) - 2\ (0.5\ dB) - 0.5\ dB$

$P_M = 13\ dB - 2\ dB - 2.5\ dB - 1\ dB - 0.5\ dB$

$P_M = 7\ dB$

The following sample calculation for an 8-km-long single-mode link with a power budget (P_B) of 13 dB uses the estimated values from Table 87 on page 151 to calculate link loss (LL) as the sum of fiber attenuation (8 km @ 0.5 dB/km, or 4 dB) and loss for seven connectors (0.5 dB per connector, or 3.5 dB). The power margin (P_M) is calculated as follows:

$P_M = P_B - LL$

$P_M = 13\ dB - 8\ km\ (0.5\ dB/km) - 7(0.5\ dB)$

$P_M = 13\ dB - 4\ dB - 3.5\ dB$

$P_M = 5.5\ dB$

In both examples, the calculated power margin is greater than zero, indicating that the link has sufficient power for transmission and does not exceed the maximum receiver input power.

Copyright © 2019, Juniper Networks, Inc.

CHAPTER 13

Management Cable Specifications and Pinouts

- T640 Routing Engine Interface Cable and Wire Specifications on page 153
- T640 DB-9 Connector Pinouts for the Routing Engine AUXILIARY and CONSOLE Ports on page 154
- T640 RJ-45 Connector Pinouts for the Routing Engine ETHERNET Port on page 154

T640 Routing Engine Interface Cable and Wire Specifications

Table 88 on page 153 lists the specifications for the cables that connect to management ports and the wires that connect to the alarm relay contacts.

Table 88: Cable and Wire Specifications for Routing Engine Management and Alarm Interfaces

Port	Cable Specification	Cable/Wire Supplied	Maximum Length	Router Receptacle
Routing Engine console or auxiliary interface	RS-232 (EIA-232) serial cable	One 6-ft (1.83-m) length with DB-9/DB-9 connectors	6 ft (1.83 m)	DB-9 male
Routing Engine Ethernet interface	Category 5 cable or equivalent suitable for 100Base-T operation	One 15-ft (4.57-m) length with RJ-45/RJ-45 connectors	328 ft (100 m)	RJ-45 autosensing
Alarm relay contacts	Wire with gauge between 28-AWG and 14-AWG (0.08 and 2.08 mm^2)	NO	None	—

Related Documentation

- T640 Routing Engine Description on page 36
- T640 Connector Interface Panel (CIP) Description on page 19

T640 DB-9 Connector Pinouts for the Routing Engine AUXILIARY and CONSOLE Ports

The ports on the CIP labeled **AUXILIARY** and **CONSOLE** are DB-9 receptacles that accept RS-232 (EIA-232) cable. The **AUXILIARY** port connects the Routing Engine to a laptop, modem, or other auxiliary unit, and the **CONSOLE** port connects it to a management console. The ports are configured as data terminal equipment (DTE). Table 89 on page 154 describes the DB-9 connector pinouts.

Table 89: DB-9 Connector Pinouts

Pin	Signal	Direction	Description
1	DCD	<–	Carrier Detect
2	RxD	<–	Receive Data
3	TxD	–>	Transmit Data
4	DTR	–>	Data Terminal Ready
5	Ground	—	Signal Ground
6	DSR	<–	Data Set Ready
7	RTS	–>	Request To Send
8	CTS	<–	Clear To Send
9	RING	<–	Ring Indicator

Related Documentation

- T640 Connector Interface Panel (CIP) Description on page 19
- Connecting the T640 Router to a Management Console or Auxiliary Device on page 218
- T640 Routing Engine Interface Cable and Wire Specifications on page 153

T640 RJ-45 Connector Pinouts for the Routing Engine ETHERNET Port

The port on the CIP labeled **ETHERNET** is an autosensing 10/100 millions of packets per second (Mbps) Ethernet RJ-45 receptacle that accepts an Ethernet cable for connecting the Routing Engine to a management LAN (or other device that supports out-of-band management). Table 90 on page 154 describes the RJ-45 connector pinouts.

Table 90: RJ-45 Connector Pinouts

Pin	Signal
1	TX+

Copyright © 2019, Juniper Networks, Inc.

Table 90: RJ-45 Connector Pinouts (continued)

Pin	Signal
2	TX –
3	RX+
4	Termination network
5	Termination network
6	RX–
7	Termination network
8	Termination network

Related Documentation

- T640 Connector Interface Panel (CIP) Description on page 19
- Connecting the T640 Router to a Network for Out-of-Band Management on page 221
- T640 Routing Engine Interface Cable and Wire Specifications on page 153

Copyright © 2019, Juniper Networks, Inc.

Copyright © 2019, Juniper Networks, Inc.

PART 3

Initial Installation and Configuration

- Installation Overview on page 159
- Unpacking the T640 on page 161
- Installing the Rack Mounting Hardware on page 167
- Installing the T640 Router into a Rack on page 173
- Installing the T640 Router With a Mechanical Lift on page 175
- Installing the T640 Router Without a Mechanical Lift on page 185
- Connecting the T640 to Ground on page 215
- Connecting the T640 to External Devices on page 217
- Providing Power to the T640 on page 227
- Configuring the Junos OS Software on page 259

Copyright © 2019, Juniper Networks, Inc.

Copyright © 2019, Juniper Networks, Inc.

CHAPTER 14

Installation Overview

- T640 Router Installation Summary on page 159

T640 Router Installation Summary

It is important to proceed through the installation process in the following order:

1. Prepare your installation site.

   See "T640 Site Preparation Checklist" on page 125.

2. Review the safety guidelines.

   See "General Safety Guidelines for Juniper Networks Devices" on page 525.

3. Unpack the router and verify the parts received.

   "Unpacking the T640 Router" on page 161.

4. Install the mounting hardware.

   See "Installing the T640 Mounting Hardware for a Four-Post Rack or Cabinet" on page 167 or "Installing the T640 Mounting Hardware for an Open-Frame Rack" on page 170.

5. Install the router.

   See "Mounting the T640 Chassis Using a Mechanical Lift" on page 179 or "Installing the T640 Chassis in the Rack Manually" on page 199.

6. Ground the router.

   See "Connecting the T640 Grounding Cable" on page 216.

7. Connect the router to a management device.

   See "Connecting the T640 Router to a Management Console or Auxiliary Device" on page 218.

Copyright © 2019, Juniper Networks, Inc.

8. Power on the router.

   See "Powering On a DC-Powered T640 Router" on page 247.

9. Perform the initial system configuration.

   See "Initially Configuring the T640 Router" on page 259.

Related Documentation

- T640 Chassis Description on page 15
- T640 Installation Safety Guidelines on page 533

Copyright © 2019, Juniper Networks, Inc.

CHAPTER 15

Unpacking the T640

- Tools and Parts Required to Unpack the T640 Router on page 161
- Unpacking the T640 Router on page 161
- Verifying the T640 Router Parts Received on page 163

Tools and Parts Required to Unpack the T640 Router

To unpack the router and prepare for installation, you need the following tools:

- Phillips (+) screwdriver, number 2
- 1/2-in. or 13-mm open-end or socket wrench to remove bracket bolts from the shipping pallet
- Blank panels to cover any slots not occupied by a component

Related Documentation

- T640 Chassis Description on page 15
- T640 Router Description on page 3

Unpacking the T640 Router

The router is shipped in a wooden crate. A wooden pallet forms the base of the crate. The router chassis is bolted to this pallet. Quick Start installation instructions and a cardboard accessory box are also included in the shipping crate.

The shipping crate measures 50 in. (127 cm) high, 30 in. (76.2 cm) wide, and 41 in. (104 cm) deep. The total weight of the crate containing the router and accessories can range from 582 lb (267 kg) to 650 lb (295 kg).

NOTE: **The router is maximally protected inside the shipping crate. Do not unpack it until you are ready to begin installation.**

To unpack:

1. Move the shipping crate to a staging area as close to the installation site as possible, where you have enough room to remove the components from the chassis. While the chassis is bolted to the pallet, you can use a forklift or pallet jack to move it.

2. Position the shipping crate with the arrows pointing up.

3. Open all the latches on the shipping crate.

4. Remove the front door of the shipping crate cover and set it aside.

5. Slide the remainder of the shipping crate cover off the pallet.

6. Remove the foam covering the top of the router.

7. Remove the accessory box and the Quick Start documentation.

8. Verify the parts received.

9. Remove the vapor corrosion inhibitor (VCI) packs attached to the pallet, being careful not to break the VCI packs open.

10. To remove the brackets holding the chassis on the pallet, use a 1/2-in. socket wrench and a number 2 Phillips screwdriver to remove the bolts and screws from the brackets.

11. Store the brackets and bolts inside the accessory box.

12. Save the shipping crate cover, pallet, and packing materials in case you need to move or ship the router at a later time.

13. Proceed with the installation.

Copyright © 2019, Juniper Networks, Inc.

Figure 59: Contents of the Shipping Crate

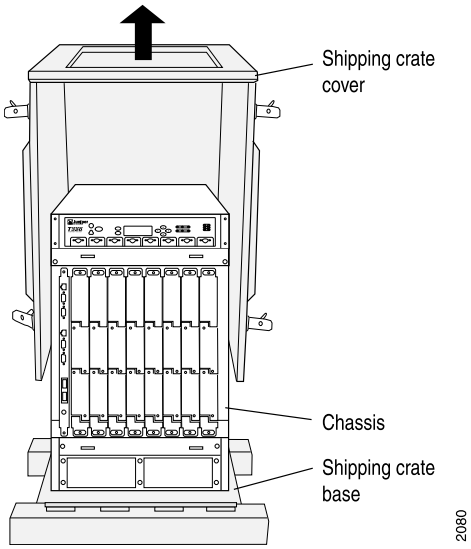

Related Documentation

- T640 Chassis Description on page 15
- Verifying the T640 Router Parts Received on page 163
- Installing the T640 Router Using a Mechanical Lift on page 176
- Installing the T640 Chassis in the Rack Manually on page 199

Verifying the T640 Router Parts Received

A packing list is included in each shipment. Check the parts in the shipment against the items on the packing list. The packing list specifies the part numbers and descriptions of each part in your order.

If any part is missing, contact a customer service representative.

The main shipment contains the router chassis with installed components, listed in Table 91 on page 163, and an accessory box, which contains the parts listed in Table 92 on page 165.

Table 91: Router Parts List

Component	Quantity
Chassis, including midplane, craft interface	1
FPCs	Up to 8
PICs	Up to 4 per FPC
SIBs	5

Table 91: Router Parts List (continued)

Component	Quantity
Routing Engines	1 or 2
Control boards	1 or 2 (one for each Routing Engine)
SCGs	1 or 2
Power supplies	2
CIP	1
Front fan trays	2
Rear fan tray	1
Quick Start installation	1
Large mounting shelf—Required for all mounting options.	1
Small mounting shelf—Required only for four-post rack or cabinet	1
Spacer bars (attached to the back of the front-mounting flanges on the chassis—Required only for four-post rack or cabinet	2
Blank panels for slots without components installed	One blank panel for each slot not occupied by a component

Copyright © 2019, Juniper Networks, Inc.

Table 92: Accessory Box Parts List

Part	Quantity
Affidavit for T1 connection	1
Connectors for alarm relay cables	2
DB-9 (male) to DB-25 (female) adapter	1
ESD wrist strap with cable	1
Ethernet cable, 15-ft length, to connect Routing Engine to management device	1
PCMCIA Card holder and hook-and-loop fasteners (male and female)	1 of each
DC power and grounding cable lugs	36 lugs are included. One lug is for the grounding cable. The remaining cable lugs are for the DC power cables. The number of cable lugs varies depending on the power supply and how many cables are being connected.
Screws to fasten grounding cable to chassis	2
Washers for grounding cable lug	2
Optional cable management restraints	2
Product warranty	1
Read me first document	1
Screws to mount chassis	Bag of 14
Serial cable, 6-ft length, to connect Routing Engine to management console	1
End User License Agreement	1

Related Documentation

- T640 Chassis Description on page 15
- Installing the T640 Router Using a Mechanical Lift on page 176

Copyright © 2019, Juniper Networks, Inc.

- Installing the T640 Chassis in the Rack Manually on page 199

Copyright © 2019, Juniper Networks, Inc.

CHAPTER 16

Installing the Rack Mounting Hardware

- Installing the T640 Mounting Hardware for a Four-Post Rack or Cabinet on page 167
- Installing the T640 Mounting Hardware for an Open-Frame Rack on page 170

Installing the T640 Mounting Hardware for a Four-Post Rack or Cabinet

To prepare to install the T640 router into a four-post rack or cabinet:

- Install cage nuts, if needed.
- Install the large mounting shelf and the spacer bars on the front rack rail.
- Install the small mounting shelf on the rear rack rail.
- Remove the center-mounting brackets from the chassis.

The mounting brackets and flanges have holes for rack-mounting screws, spaced at 5.25 in. (13.34 cm).

Table 93 on page 167 specifies the holes in which you insert mounting screws (an X indicates a mounting hole location), and cage nuts if needed. The hole distances are relative to one of the standard U divisions on the rack. The bottom of all mounting shelves is at 0.04 in. (0.02 U) above a U division.

Table 93: T640 Four-Post or Cabinet Rack Mounting Hole Locations

Hole	Distance Above U Division		Large Shelf	Spacer Bars	Small Shelf
60	34.75 in. (88.3 cm)	19.86 U		X	
51	29.51 in. (74.9 cm)	16.86 U		X	
42	24.26 in. (61.6 cm)	13.86 U		X	
33	19.01 in. (48.3 cm)	10.86 U		X	
24	13.76 in. (34.9 cm)	7.86 U		X	
15	8.51 in. (21.6 cm)	4.86 U		X	X

Copyright © 2019, Juniper Networks, Inc.

Table 93: T640 Four-Post or Cabinet Rack Mounting Hole Locations (continued)

Hole	Distance Above U Division		Large Shelf	Spacer Bars	Small Shelf
12	6.76 in. (17.1 cm)	3.86 U			X
9	5.01 in. (12.7 cm)	2.86 U			X
6	3.26 in. (8.3 cm)	1.86 U		X	X
3	1.51 in. (3.8 cm)	0.86 U			X
2	0.88 in. (2.2 cm)	0.50 U	X		

To install the mounting shelves and spacer bars:

1. Install cage nuts, if needed, in the mounting holes specified in Table 93 on page 167:
   - On the front rack rails, install cage nuts in the holes specified for the large shelf and the spacer bars.
   - On the rear rack rails, install cage nuts in the holes specified for the small shelf.
2. On the front of each front rack rail, partially insert a mounting screw into the lowest hole specified in Table 93 on page 167 for the large shelf and the spacer bars.
3. Install the large shelf on the front rack rails. Rest the bottom slot of each flange on a mounting screw.
4. Tighten all the screws completely.
5. The router is shipped with each spacer bar attached to the rear of each front-mounting flange. Remove each spacer bar by removing the screws that fasten the spacer bar to the front-mounting flange.

   Figure 4 on page 16 shows the front-mounting flanges.
6. Place one of the spacer bars over a flange of the installed large shelf. Position the notch in the rear of the spacer bar so the upper part of the bar is flush with the rack rail and the lower part is flush with the flange of the shelf (see Figure 60 on page 169).
7. Insert a mounting screw into each of the nonthreaded holes in the recesses of the spacer bar to secure the spacer bar. Each hole should have a cage nut behind it.
8. Repeat Steps 6 and 7 for the other spacer bar.
9. Tighten all the screws completely.

Copyright © 2019, Juniper Networks, Inc.

10. On the back of each rear rack rail, partially insert a mounting screw into the lowest hole specified in Table 93 on page 167 for the small shelf.

11. Install the small shelf on the back rack rails. Rest the bottom slot of each flange on a mounting screw. The small shelf installs on the back of the rear rails, extending toward the center of the rack. The bottom of the small shelf on the rear rack rails must align with the bottom of the large shelf on the front rack rails.

12. Partially insert screws into the open holes in the ears of the small shelf.

13. Tighten all the screws completely.

14. Remove the center-mounting brackets from the chassis by loosening the screws at the top and bottom of each bracket.

    Figure 4 on page 16 shows the center-mounting brackets.

Figure 60: Positioning the Spacer Bar on the Rack

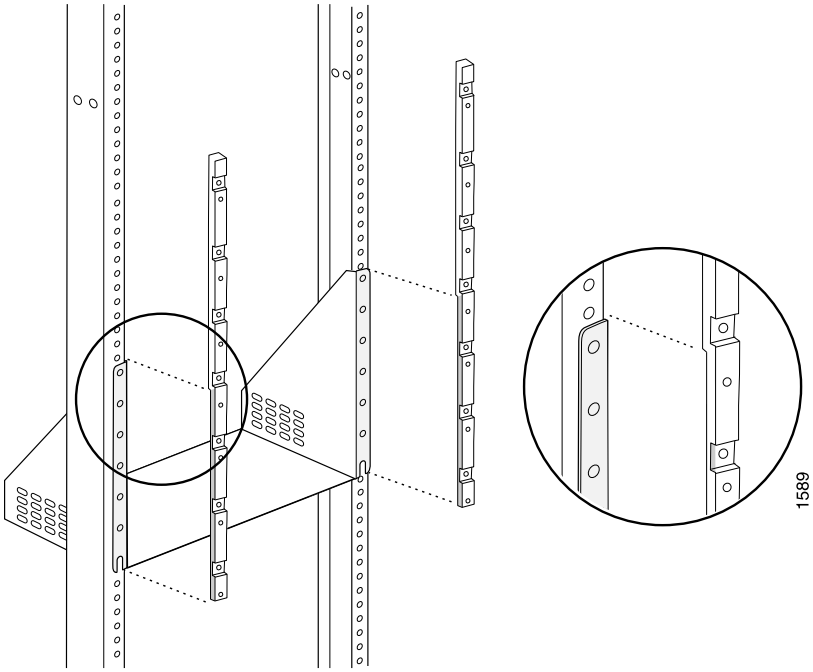

Figure 61: Installing the Mounting Hardware for a Four-Post Rack or Cabinet

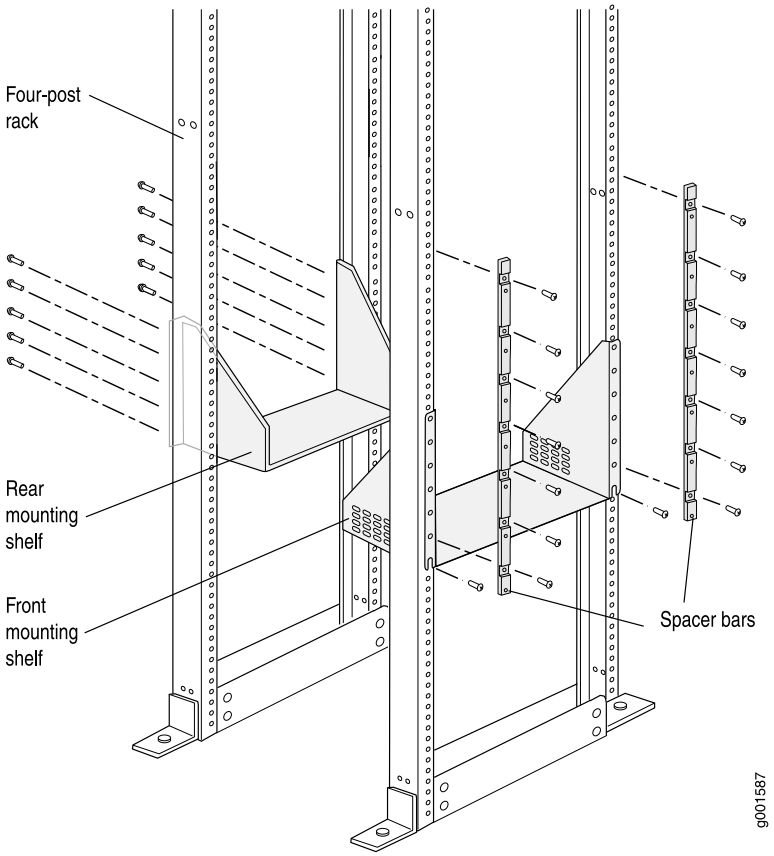

Related Documentation

- T640 Chassis Description on page 15
- Verifying the T640 Router Parts Received on page 163
- Installing the T640 Mounting Hardware for an Open-Frame Rack on page 170
- T640 Site Preparation Checklist on page 125

Installing the T640 Mounting Hardware for an Open-Frame Rack

Before installing the T640 router into an open-frame rack, you must first install the large mounting shelf on the rack. If you are front-mounting the router, you must remove the center-mounting brackets from the chassis. In an open-frame rack, center-mounting is generally preferable to front-mounting because the more even distribution of weight provides greater stability. The small mounting shelf and the spacer bars are not needed.

To install the mounting hardware for an open-frame rack (see Figure 62 on page 171):

1. Install cage nuts, if needed, in the mounting holes specified in Table 94 on page 172.

2. On the rear of each rack rail, partially insert a mounting screw into the lowest hole specified in Table 94 on page 172 for the large shelf.

Copyright © 2019, Juniper Networks, Inc.

3. Install the large shelf on the rack. Rest the bottom slot of each flange on a mounting screw.

4. Partially insert screws into the open holes in the ears of the large shelf.

5. Tighten all the screws completely.

6. Remove the mounting brackets from the chassis by loosening the screws at the top and bottom of each bracket.

The router is shipped with each spacer bar attached to the rear of each front-mounting flange. Remove each spacer bar by removing the screws that fasten the spacer bar to the front-mounting flange.

Figure 4 on page 16 shows the front-mounting flanges.

Figure 62: Installing the Mounting Hardware for an Open-Frame Rack

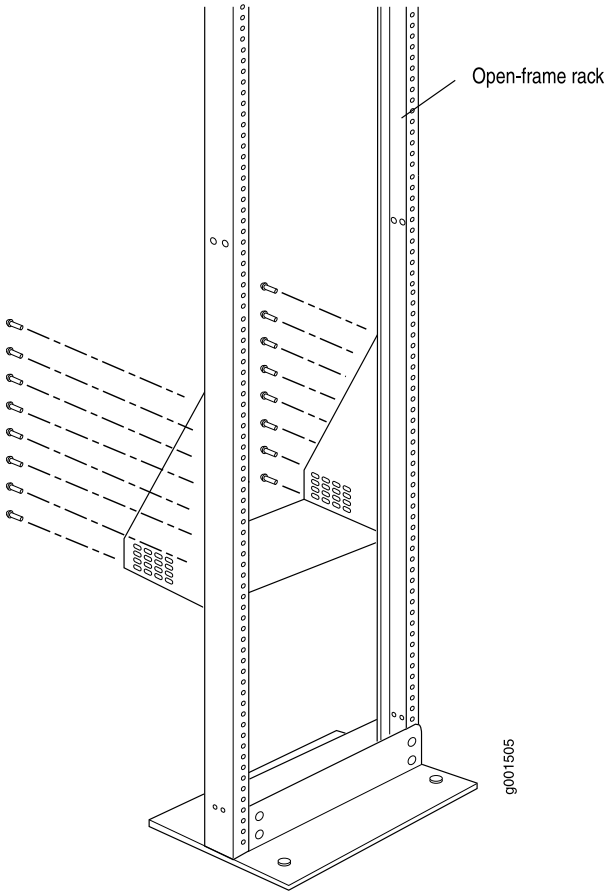

Table 94 on page 172 specifies the mounting holes in which you insert the mounting screws (an X indicates a mounting hole location), and cage nuts if needed. The hole distances

are relative to one of the standard U divisions on the rack. For reference, the bottom of all mounting shelves is at 0.04 in. (0.02 U) above a U division.

Table 94: T640 Open-Frame Rack Mounting Hole Locations

Hole	Distance Above U Division		Large Shelf
59	34.13 in. (86.7 cm)	19.50 U	X
53	30.63 in. (77.8 cm)	17.50 U	X
50	28.88 in. (73.3 cm)	16.50 U	X
44	25.38 in. (64.5 cm)	14.50 U	X
41	23.63 in. (60.0 cm)	13.50 U	X
35	20.13 in. (51.1 cm)	11.50 U	X
32	18.38 in. (46.7 cm)	10.50 U	X
31	17.75 in. (45.1 cm)	10.14 U	X

Related Documentation

- T640 Chassis Description on page 15
- Verifying the T640 Router Parts Received on page 163
- T640 Site Preparation Checklist on page 125

Copyright © 2019, Juniper Networks, Inc.

CHAPTER 17

Installing the T640 Router into a Rack

- Overview of Installing the T640 Router in a Rack on page 173

Overview of Installing the T640 Router in a Rack

Before installing the router in a rack, verify that the following tasks have been completed:

1. Review the "T640 Site Preparation Checklist" on page 125 to verify that all the tasks required to prepare the site for router installation have been completed.

2. Review the safety information. To avoid harm to yourself or the router as you install and maintain it, follow the guidelines for working with and near electrical equipment, as well as the safety procedures for working with routers. However, providing an exhaustive set of guidelines for working with electrical equipment is beyond the scope of this documentation.

   See"T640 Installation Safety Guidelines" on page 533 and "General Safety Guidelines for Juniper Networks Devices" on page 525.

3. Remove the router from the shipping crate.

   See "Unpacking the T640 Router" on page 161.

4. Install the mounting hardware.

   See "Installing the T640 Mounting Hardware for an Open-Frame Rack" on page 170 or "Installing the T640 Mounting Hardware for a Four-Post Rack or Cabinet" on page 167.

Because of the router's size and weight—up to 565 lb (256.3 kg) depending on the configuration—we strongly recommend that you install the router using a mechanical lift, as described in "Installing the T640 Router Using a Mechanical Lift" on page 176. If you do not use a lift to install the router, refer to "Installing the T640 Chassis in the Rack Manually" on page 199 for complete instructions to safely install the router. Without a mechanical lift, at least four people are needed to safely lift the chassis into the rack or cabinet.

Copyright © 2019, Juniper Networks, Inc.

CHAPTER 18

Installing the T640 Router With a Mechanical Lift

- Overview of Installing a T640 Router Using a Mechanical Lift on page 175
- Tools Required to Install the T640 Router Using a Mechanical Lift on page 175
- Installing the T640 Router Using a Mechanical Lift on page 176

Overview of Installing a T640 Router Using a Mechanical Lift

Because of the T640 router's size and weight—up to 565 lb (256.3 kg) depending on the configuration—we strongly recommend that you install the router using a mechanical lift.

1. Gather the tools required to install the router.

   See "Tools Required to Install the T640 Router Using a Mechanical Lift" on page 175

2. Install the router using a mechanical lift.

   See "Installing the T640 Router Using a Mechanical Lift" on page 176.

   a. Remove the power supplies.

   b. Attach the installation handle.

   c. Mount the chassis in the rack or cabinet.

   d. Remove the installation handle, and reinstall the power supplies.

Tools Required to Install the T640 Router Using a Mechanical Lift

To install the T320 chassis using a mechanical lift, you need the following tools:

- Mechanical lift
- Phillips (+) screwdrivers, number 2

Copyright © 2019, Juniper Networks, Inc.

Related Documentation

- T640 Router Installation Summary on page 159
- T640 Installation Safety Guidelines on page 533

Installing the T640 Router Using a Mechanical Lift

1. Removing the T640 Power Supplies on page 176
2. Attaching the T640 Router Installation Handle on page 177
3. Mounting the T640 Chassis Using a Mechanical Lift on page 179
4. Removing the T640 Router Installation Handle and Reinstalling the Power Supplies on page 182

Removing the T640 Power Supplies

The power supplies are located at the rear of the chassis below the SIBs. Each two-input 160-A DC power supply weighs approximately 23 lb (10.5 kg). Each three-input 240-A DC power supply weighs approximately 25 lb (11.3 kg). Each four-input 240-A DC power supply weighs approximately 26.6 lb (12.0 kg). Each six-input DC power supply weighs 39.7 lb (18.0 kg). Each AC power supply weighs 31.0 lb (14.06 kg).

To remove the power supplies, starting with the upper power supply:

1. Attach an electrostatic discharge (ESD) grounding strap to your bare wrist, and connect the strap to an approved site ESD grounding point. See the instructions for your site.

2. Switch the circuit breakers on the two-input 160-A, three-input 240-A, or four-input 240-A DC power supply faceplates to the off position (**O**), or the power switches on the AC power supply or six-input DC power supply faceplates to the standby position. We recommend this even though the power supplies are not connected to power sources.

3. Loosen the captive screws on the lower corners of the power supply faceplate completely.

4. Twist the ejector handles on the upper corners of the faceplate counterclockwise to unseat the power supply.

5. Grasp the handle on the power supply faceplate and pull firmly to start removing the power supply. Slide it halfway out of the chassis (see Figure 63 on page 177).

CAUTION: **Be prepared to support the full weight of the power supply as you remove it from the router.**

Copyright © 2019, Juniper Networks, Inc.

6. Place one hand underneath the power supply to support it and slide it completely out of the chassis.

7. Repeat the procedure for the other power supply.

NOTE: Figure 63 on page 177 shows the two-input 160-A DC power supply, but the procedure also applies to the three-input 240-A DC power supply, four-input 240-A DC power supply, or six-input DC power supply.

Figure 63: Removing a Power Supply Before Installing the Router

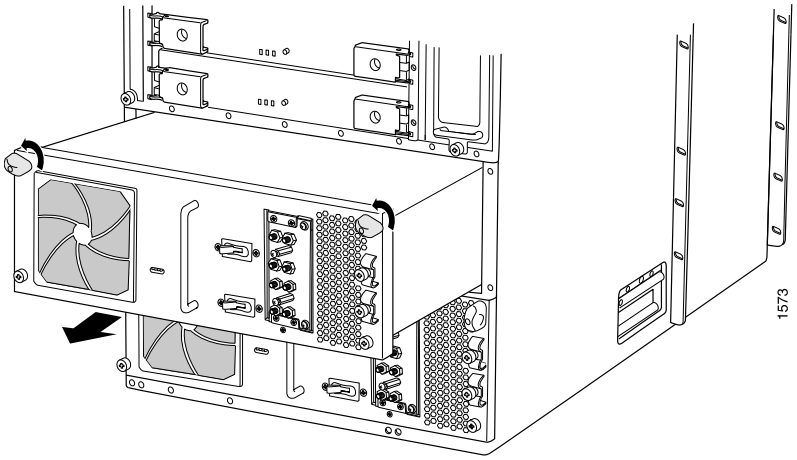

Attaching the T640 Router Installation Handle

To assist you with the installation of the T640 router, attach the installation handle over the power supply slots of the chassis. To remove the power supplies and attach the handle, starting with the upper power supply:

1. Attach an electrostatic discharge (ESD) grounding strap to your bare wrist, and connect the strap to an approved site ESD grounding point. See the instructions for your site.

2. Switch the circuit breakers on the two-input 160-A, three-input 240-A, or four-input 240-A power supply faceplate to the off position (**O**), or switch the power switch on the six-input DC power supply to the standby position. We recommend this even though the power supplies are not connected to power sources.

3. Loosen the captive screws on the lower corners of the power supply faceplate completely. Twist the ejector handles on the upper corners of the faceplate counterclockwise to unseat the power supply.

4. Twist the ejector handles on the upper corners of the faceplate counterclockwise to unseat the power supply.

5. Grasp the handle on the power supply faceplate and pull firmly to start removing the power supply. Slide it halfway out of the chassis (see Figure 64 on page 178).

   CAUTION: **Be prepared to support the full weight of the power supply as you remove it from the router.**

6. Place one hand underneath the power supply to support it and slide it completely out of the chassis.

7. Repeat the procedure for the other power supply.

8. Attach the installation handle by tightening the captive screws of the handle into the holes previously occupied by the captive screws of the power supplies (see Figure 65 on page 179).

Figure 64: Removing a Power Supply Before Installing the Installation Handle

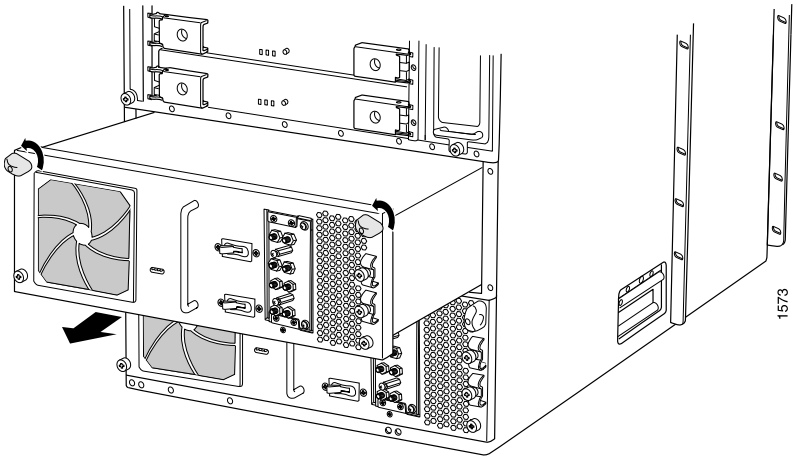

Copyright © 2019, Juniper Networks, Inc.

Figure 65: Attaching the Installation Handle

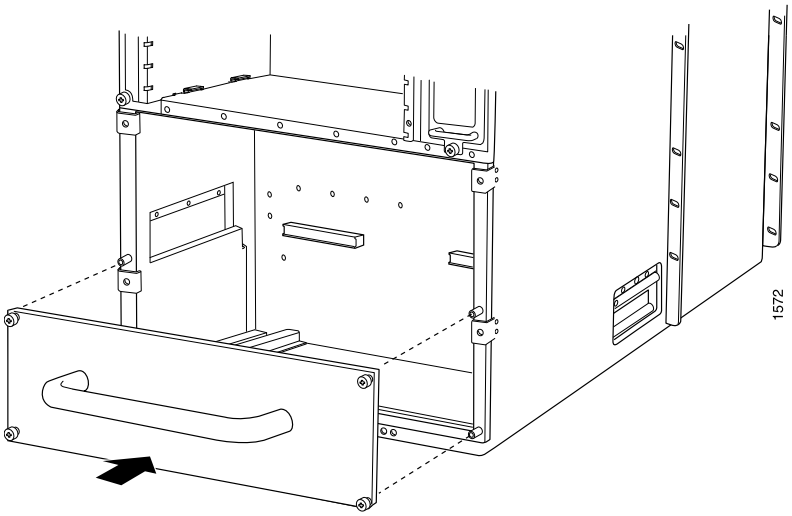

Mounting the T640 Chassis Using a Mechanical Lift

CAUTION: **Before front-mounting the router in a rack, have a qualified technician verify that the rack is strong enough to support the router's weight and is adequately supported at the installation site.**

To install the T640 router using a lift (see Figure 67 on page 182):

1. If you are installing the router in an open-frame rack, ensure that the rack is in its permanent location and is secured to the building. Ensure that the installation site allows adequate clearance for both airflow and maintenance. For details, see "T640 Clearance Requirements for Airflow and Hardware Maintenance" on page 130.

2. Load the router onto the lift, making sure it rests securely on the lift platform (see Figure 66 on page 181).

   CAUTION: **Do not lift the router using the installation handle, or the handles on the sides of the chassis. Use these handles only to help position the router.**

3. Using the lift, position the router in front of the rack or cabinet, centering it in front of the mounting shelves.

4. Lift the chassis approximately 0.75 in. above the surface of the mounting shelves and position it as close as possible to the shelves.

Copyright © 2019, Juniper Networks, Inc.

5. Carefully slide the router onto the mounting shelves so that the bottom of the chassis and the mounting shelves overlap by approximately 2 inches.

6. With one person pulling on the installation handle from the rear of the rack or cabinet while two people push on the front-mounting flanges, slide the router onto the mounting shelves until the mounting brackets or front-mounting flanges contact the rack rails or spacer bars (depending on your type of installation). The shelves ensure that the holes in the mounting brackets and the front-mounting flanges of the chassis align with the holes in the rack rails.

   If you center-mount the chassis, you use the center-mounting brackets attached to the chassis; if you front-mount the chassis, you use the front-mounting flanges.

7. Move the lift away from the rack.

8. If you are installing the router in a four-post rack or cabinet, install a mounting screw and a cage nut into each of the holes aligned with the threaded holes in the spacer bars. If you are installing the router in an open-frame rack, install a mounting screw into each of the open mounting holes aligned with the rack, starting from the bottom.

9. Visually inspect the alignment of the router. If the router is installed properly in the rack, all the mounting screws on one side of the rack should be aligned with the mounting screws on the opposite side and the router should be level.

Copyright © 2019, Juniper Networks, Inc.

Figure 66: Loading the Router onto the Lift

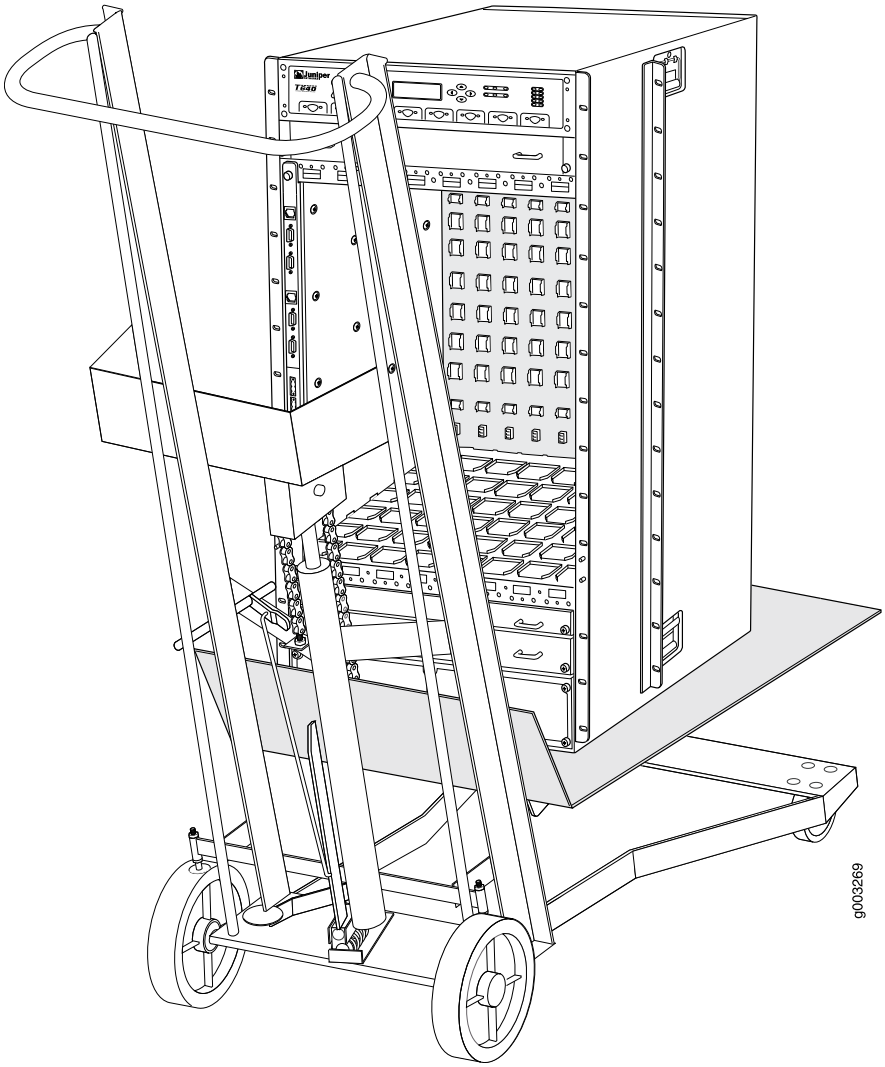

Figure 67: Installing the Router in the Rack

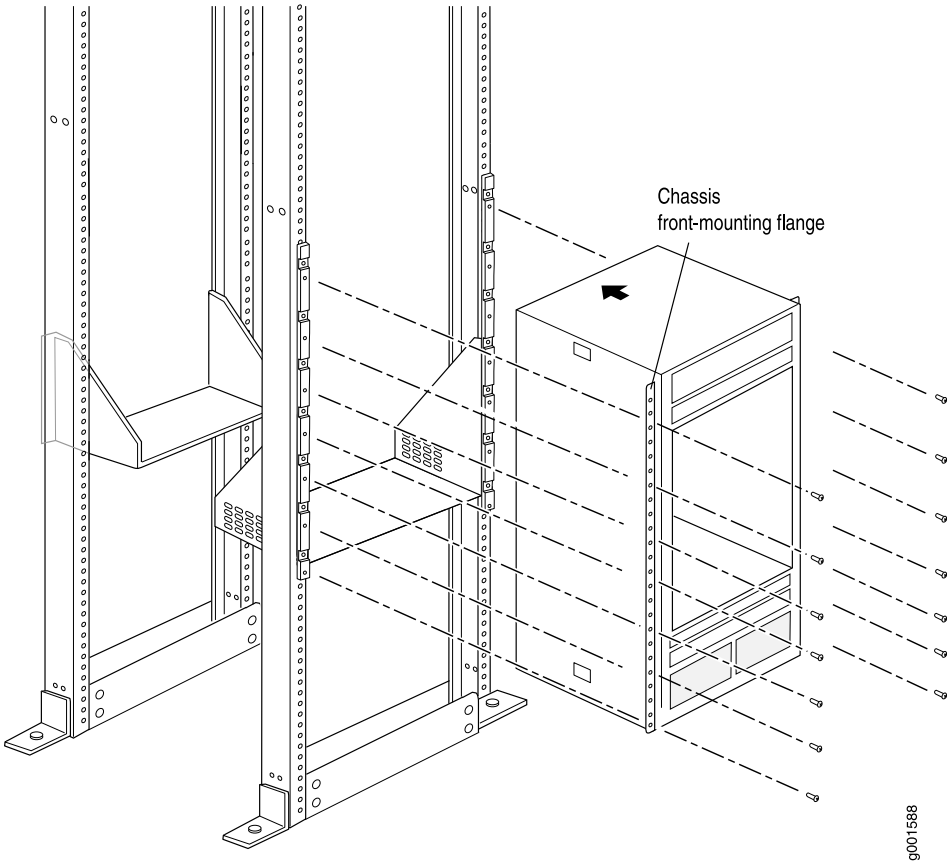

NOTE: This illustration depicts the router being installed in a four-post rack. For an illustration of the mounting hardware required for an open-frame rack, see Figure 62 on page 171.

Removing the T640 Router Installation Handle and Reinstalling the Power Supplies

After you have installed the T640 router, remove the installation handle and reinstall the two power supplies in the chassis, starting with the lower power supply:

1. Attach an electrostatic discharge (ESD) grounding strap to your bare wrist, and connect the strap to an approved site ESD grounding point. See the instructions for your site.

2. Loosen the captive screws on the installation handle completely, and remove the handle from the chassis.

3. Switch the circuit breakers on the two-input 160-A, three-input 240-A, or four-input 240-A power supply faceplate to the off position (**O**), or the power switch on the AC power supplies or six-input DC power supplies to the standby position.

Copyright © 2019, Juniper Networks, Inc.

4. Using both hands, slide the power supply into the chassis until you feel resistance.

5. Twist the ejector handles at the upper corners of the power supply faceplate clockwise until they stop.

6. Tighten the captive screws at the lower corners of the power supply faceplate to secure the power supply in the chassis.

7. Repeat the procedure for the upper power supply.

Figure 68: Reinstalling a Power Supply

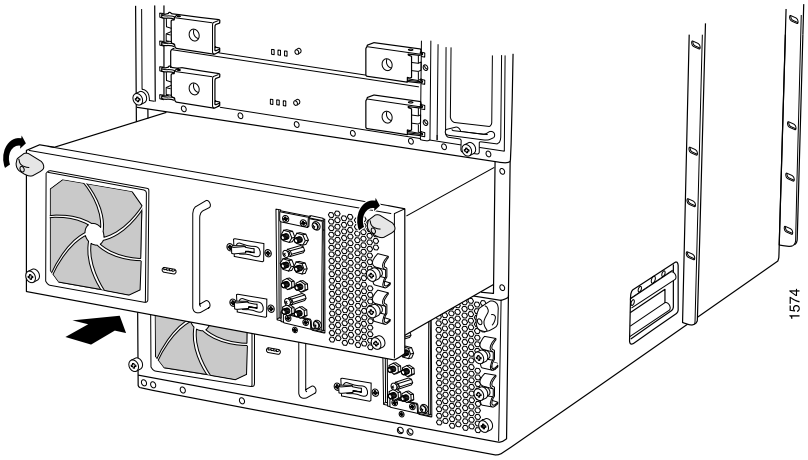

Related Documentation

- T640 Preventing Electrostatic Discharge Damage on page 528
- T640 Router Installation Summary on page 159
- T640 Installation Safety Guidelines on page 533

Copyright © 2019, Juniper Networks, Inc.

CHAPTER 19

Installing the T640 Router Without a Mechanical Lift

- Overview of Installing the T640 Router Without a Mechanical Lift on page 185
- Tools and Parts Required to Install the T640 Router Without a Mechanical Lift on page 186
- Removing Components from the T640 Chassis on page 186
- Attaching the T640 Router Installation Handle on page 198
- Installing the T640 Chassis in the Rack Manually on page 199
- Reinstalling Components in the T640 Chassis on page 202

Overview of Installing the T640 Router Without a Mechanical Lift

To install the T640 router without a mechanical lift:

1. Review the safety information. To avoid harm to yourself or the router as you install it, follow the safety guidelines and procedures for working with routers. However, providing an exhaustive set of guidelines for working with electrical equipment is beyond the scope of this documentation.

   See "General Safety Guidelines for Juniper Networks Devices" on page 525, and"T640 Installation Safety Guidelines" on page 533

2. Verify that the site has been prepared for the router installation.

   See "T640 Site Preparation Checklist" on page 125.

3. Verify that the mounting hardware has been installed.

   See"Installing the T640 Mounting Hardware for an Open-Frame Rack" on page 170 or"Installing the T640 Mounting Hardware for a Four-Post Rack or Cabinet" on page 167.

4. Remove the router from the shipping crate.

   See *Unpacking the T1600 Router*.

5. Gather the tools required to install the router.

See "Tools and Parts Required to Install the T640 Router Without a Mechanical Lift" on page 186.

6. Remove components from the chassis to make it easier to install into the rack or chassis.

   See "Removing Components from the T640 Chassis" on page 186.

7. Install the T640 Chassis in the Rack Manually.

   NOTE: **With components removed, the chassis weighs approximately 205 lb (93 kg). At least four people are needed to safely lift the chassis into the rack or cabinet.**

   See "Installing the T640 Chassis in the Rack Manually" on page 199.

8. Reinstall the components removed from the chassis.

   See "Reinstalling Components in the T640 Chassis" on page 202.

Related Documentation

- T640 Router Description on page 3

Tools and Parts Required to Install the T640 Router Without a Mechanical Lift

To install the T640 router, you need the following tools and parts:

- Phillips (+) screwdrivers, numbers 1 and 2
- Flat-blade (–) screwdriver, number 1
- 7/16-in.(11 mm) nut driver or socket wrench
- ESD grounding wrist strap

Related Documentation

- T640 Router Installation Summary on page 159
- T640 Installation Safety Guidelines on page 533

Removing Components from the T640 Chassis

If you cannot use a mechanical lift to install the T640 router (the preferred method), you can install it manually. Before installing the router manually, you must first remove most components from the chassis, and you must reinstall the components after the router is installed in the rack. With components removed, the chassis weighs approximately 205 lb (93 kg).

Copyright © 2019, Juniper Networks, Inc.

This procedure to remove components from the chassis is for initial installation only, and assumes that you have not connected power cables or cords to the router. The procedure describes how to remove components from the chassis, first from the rear and then from the front:

- Removing the T640 Power Supplies on page 187
- Removing the T640 SIBs on page 188
- Removing the T640 Control Boards on page 189
- Removing the T640 SCGs on page 191
- Removing the T640 Standard or Quiet Rear Fan Tray on page 192
- Removing the T640 Cable Management System on page 193
- Removing the T640 Standard or Quiet Front Fan Trays on page 194
- Removing the T640 FPCs on page 196

Removing the T640 Power Supplies

The power supplies are located at the rear of the chassis below the SIBs. Each two-input 160-A DC power supply weighs approximately 23 lb (10.5 kg). Each three-input 240-A DC power supply weighs approximately 25 lb (11.3 kg). Each four-input 240-A DC power supply weighs approximately 26.6 lb (12.0 kg). Each six-input DC power supply weighs 26.6 lb (12.0 kg). Each AC power supply weighs 31.0 lb (14.06 kg).

To remove the power supplies, starting with the upper power supply:

1. Attach an electrostatic discharge (ESD) grounding strap to your bare wrist, and connect the strap to an approved site ESD grounding point. See the instructions for your site.

2. Switch the circuit breakers on the DC power supply faceplates to the off position (**O**) or the power switches on the AC power supply faceplates to the standby position. We recommend this even though the power supplies are not connected to power sources.

3. Loosen the captive screws on the lower corners of the power supply faceplate completely.

4. Twist the ejector handles on the upper corners of the faceplate counterclockwise to unseat the power supply.

5. Grasp the handle on the power supply faceplate and pull firmly to start removing the power supply. Slide it halfway out of the chassis (see Figure 69 on page 188).

CAUTION: **Be prepared to support the full weight of the power supply as you remove it from the router.**

6. Place one hand underneath the power supply to support it and slide it completely out of the chassis.

7. Repeat the procedure for the other power supply.

NOTE: Figure 69 on page 188 shows the two-input 160-A DC power supply, but the procedure also applies to the three-input 240-A DC power supply, four-input 240-A DC power supply, or six-input DC power supply.

Figure 69: Removing a Power Supply Before Installing the Router

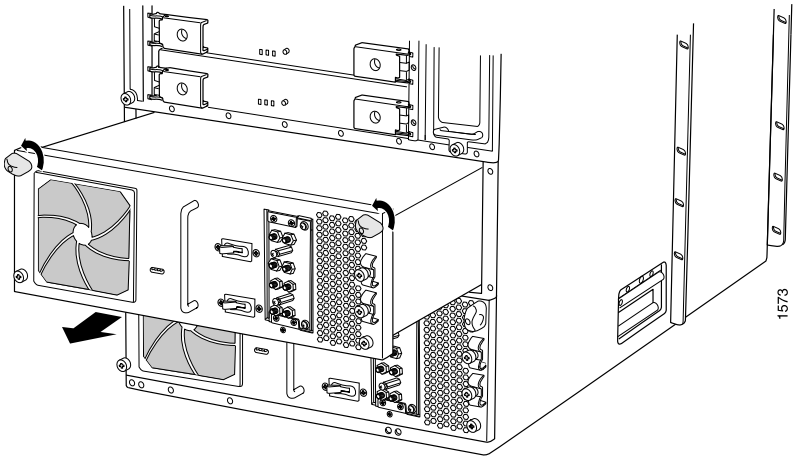

See Also

- T640 Preventing Electrostatic Discharge Damage on page 528
- T640 Power System Description on page 103
- Reinstalling the T640 Power Supplies on page 208
- T640 DC Power System Electrical Specifications on page 133

Removing the T640 SIBs

Five standard SIBs, SIB version B, or T640-SIBs are installed in the router. The SIBs are located in the rear of the chassis in the slots marked **SIB0** through **SIB4**. Each SIB weighs approximately 6.8 lb (3.1 kg).

To remove a SIB (see Figure 70 on page 189):

1. Place an electrostatic bag or antistatic mat on a flat, stable surface.

2. Attach an electrostatic discharge (ESD) grounding strap to your bare wrist, and connect the strap to an approved site ESD grounding point. See the instructions for your site.

Copyright © 2019, Juniper Networks, Inc.

3. Loosen the captive screws (using a Phillips (+) screwdriver, number 2) on the ejector handles on each side of the SIB faceplate.

4. Flip the ejector handles outward to unseat the SIB.

5. Grasp both ejector handles, pull firmly, and slide the SIB about three-quarters of the way out of the chassis.

6. Place one hand underneath the SIB to support it and slide it completely out of the chassis. Place it on the antistatic mat.

7. Repeat the procedure for each of the remaining SIBs.

Figure 70: Removing a SIB

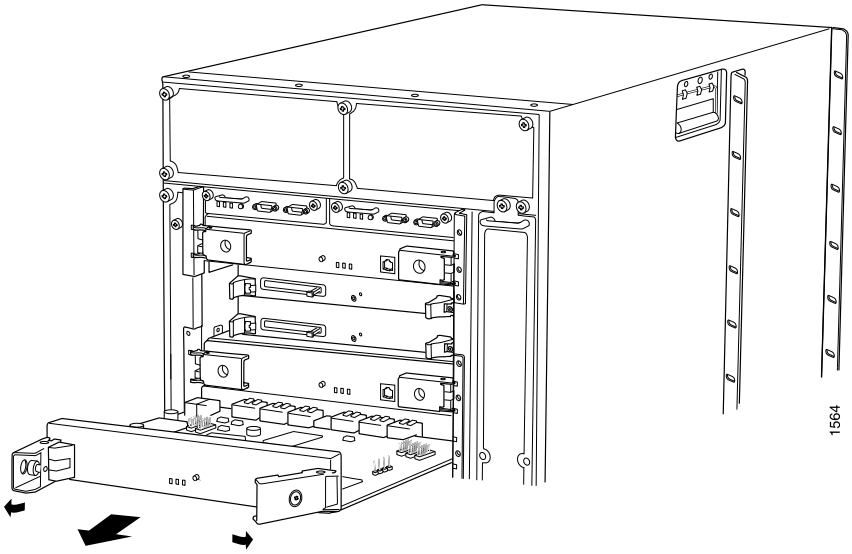

See Also

- T640 Switch Interface Boards (SIBs) Description on page 119
- Reinstalling the T640 SIBs on page 207
- Upgrading to a T640 Standard SIB Version B on page 446

Removing the T640 Control Boards

The router can have up to two control boards. These are located in the upper rear of the chassis in the slots marked **CB0** and **CB1**. Each one weighs approximately 5 lb (2.3 kg).

To remove the T640 control boards (see Figure 71 on page 190 and Figure 72 on page 191):

1. Place an electrostatic bag or antistatic mat on a flat, stable surface.

2. Attach an electrostatic discharge (ESD) grounding strap to your bare wrist, and connect the strap to an approved site ESD grounding point. See the instructions for your site.

3. Loosen the captive screws on the ejector handles on both sides of the control board faceplate.

4. Flip the ejector handles outward to unseat the control board.

5. Grasp the ejector handles and slide the control board about halfway out of the chassis.

6. Place one hand underneath the control board to support it and slide it completely out of the chassis. Place it on the antistatic mat.

   CAUTION: **Do not stack hardware components on one another after you remove them. Place each component on an antistatic mat resting on a stable, flat surface.**

7. Repeat the procedure for the second control board.

Figure 71: Removing a T-CB

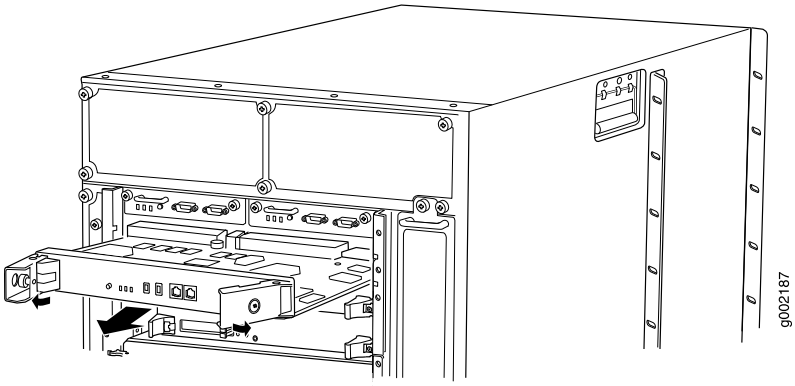

 Copyright © 2019, Juniper Networks, Inc.

Figure 72: Removing an LCC-CB

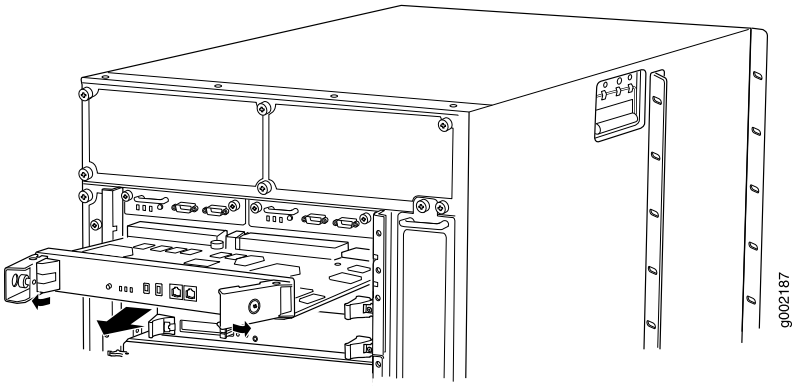

See Also

- *T640 Control Boards Description*
- T640 Standard Control Boards LEDs on page 70
- T640 T Series Control Boards (T-CBs) LEDs on page 72
- T640 LCC-CB LEDs on page 68
- Troubleshooting the T640 Host Subsystem on page 494
- Troubleshooting the T640 Control Board on page 495

Removing the T640 SCGs

The router can have one or two SCGs installed. The SCGs are located in the upper rear of the chassis, above the control boards and Routing Engines. Each SCG weighs approximately 1.9 lb (0.9 kg).

To remove the SCGs (see Figure 73 on page 192):

1. Place an electrostatic bag or antistatic mat on a flat, stable surface.
2. Attach an electrostatic discharge (ESD) grounding strap to your bare wrist, and connect the strap to an approved site ESD grounding point. See the instructions for your site.
3. Loosen the captive screws on the edges of the SCG faceplate.
4. Grasp the SCG by the handle on the faceplate, and slide it out of the chassis.
5. Place the SCG on the antistatic mat.
6. Repeat the procedure for the second SCG.

Figure 73: Removing an SCG

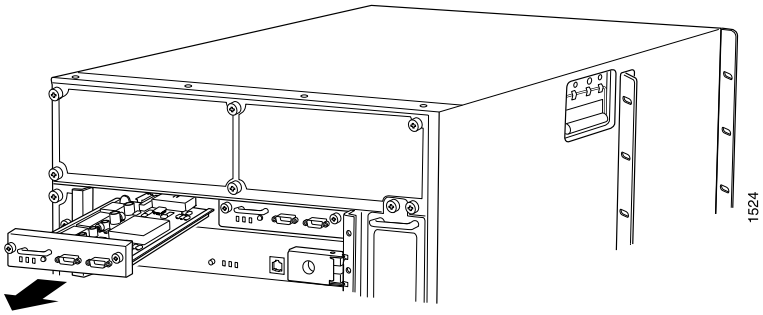

See Also

Removing the T640 Standard or Quiet Rear Fan Tray

WARNING: **Use this procedure only for routers that are powered off.**

The rear fan tray is mounted vertically on the right side of the rear of the chassis. Each standard or quiet rear fan tray weighs about 10 lb (4.5 kg).

To remove the rear fan tray (see Figure 74 on page 193):

1. Attach an electrostatic discharge (ESD) grounding strap to your bare wrist, and connect the strap to an approved site ESD grounding point. See the instructions for your site.

2. Loosen the captive screws on the top and bottom of the fan tray faceplate, using a Phillips (+) screwdriver, number 2.

3. Grasp the handles and pull the fan tray out of the chassis.

Copyright © 2019, Juniper Networks, Inc.

Figure 74: Removing the Rear Fan Tray

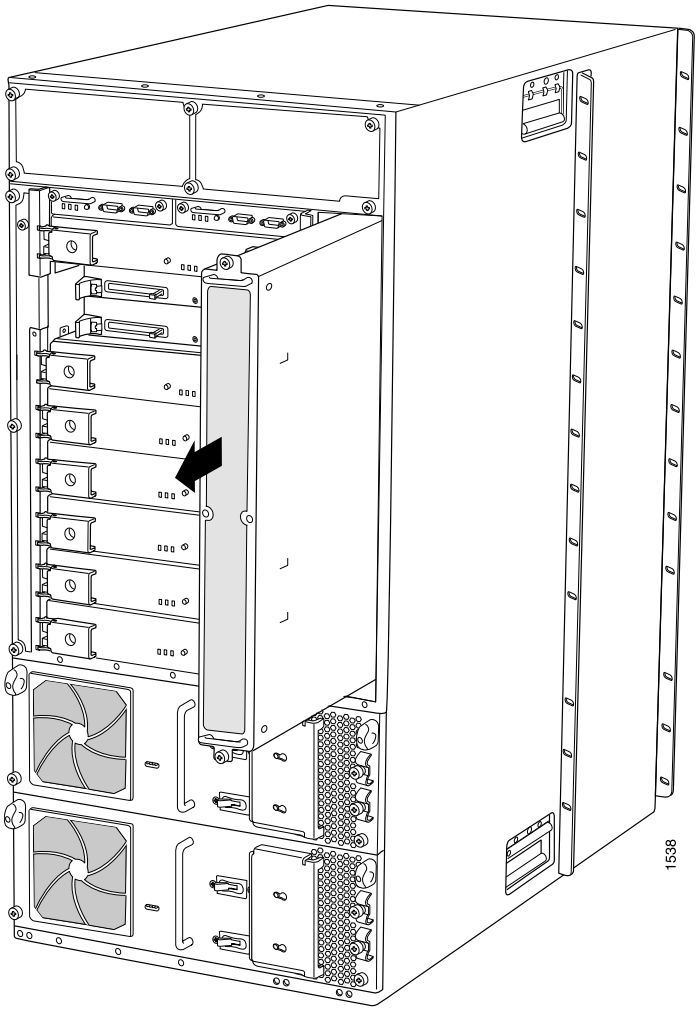

See Also

- T640 Chassis Description on page 15
- T640 Cooling System Description on page 31
- T640 Clearance Requirements for Airflow and Hardware Maintenance on page 130

Removing the T640 Cable Management System

The cable management system is located below the FPC card cage. The cable management system weighs approximately 5 lb (2.3 kg).

To remove the cable management system:

1. Attach an electrostatic discharge (ESD) grounding strap to your bare wrist, and connect the strap to an approved site ESD grounding point. See the instructions for your site.

2. Using a 3/8-in. nut driver, unscrew the nuts on the corners of the cable management system.

3. Grasp the bottom of the cable management system and pull it straight out from the studs on the front of the chassis.

See Also

- T640 Preventing Electrostatic Discharge Damage on page 528
- T640 Chassis Description on page 15
- Reinstalling the T640 Cable Management System on page 213

Removing the T640 Standard or Quiet Front Fan Trays

WARNING: **Use this procedure only for routers that are powered off.**

The upper front fan tray is located above the FPC card cage, and the lower front fan tray is located below the air filter. Each standard front fan tray weighs about 18.6 lb (8.4 kg). Each quiet front fan tray weighs about 17.8 lb (8.1 kg).

To remove the standard front fan trays (see Figure 75 on page 195):

1. Attach an electrostatic discharge (ESD) grounding strap to your bare wrist, and connect the strap to an approved site ESD grounding point. See the instructions for your site.

2. Loosen the captive screws on the corners of the faceplate of one of the fan trays.

3. Grasp the handles and pull the fan tray halfway out of the chassis.

4. Place one hand under the fan tray to support it and pull the fan tray completely out of the chassis.

5. Repeat the procedure to remove the remaining front fan tray.

To remove the quiet upper front fan tray (see Figure 76 on page 196):

1. Attach an electrostatic discharge (ESD) grounding strap to your bare wrist, and connect the strap to an approved site ESD grounding point. See the instructions for your site.

2. Loosen the captive screws on the corners of the fan tray faceplate.

3. Grasp both sides of the fan tray, and pull the fan tray out of the chassis approximately 1 to 3 inches.

Copyright © 2019, Juniper Networks, Inc.

4. Press the two latches located on each side of the fan tray up to release the fan tray from the chassis.

5. Place one hand under the fan tray to support it and pull the fan tray completely out of the chassis.

To remove the quiet lower front fan tray:

1. Attach an electrostatic discharge (ESD) grounding strap to your bare wrist, and connect the strap to an approved site ESD grounding point. See the instructions for your site.

2. Loosen the captive screws on the corners of the fan tray faceplate.

3. Grasp both sides of the fan tray, and pull the fan tray out of the chassis approximately 1 to 3 inches.

4. Press the two latches located on each side of the fan tray up to release the fan tray from the chassis.

5. Place one hand under the fan tray to support it and pull the fan tray completely out of the chassis.

Figure 75: Removing the Standard Upper Front Fan Tray

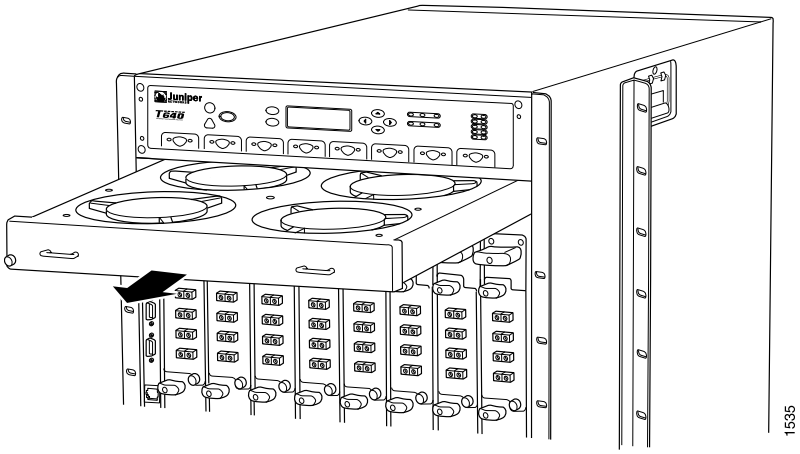

Figure 76: Removing the Quiet Upper Front Fan Tray

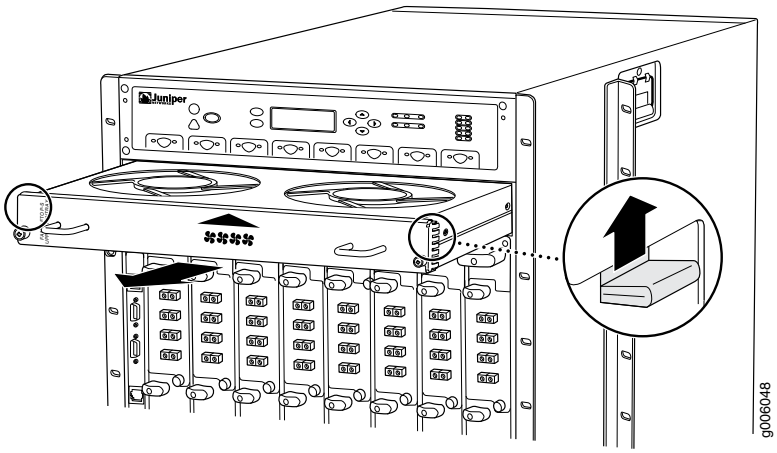

See Also

- T640 Cooling System Description on page 31
- T640 Clearance Requirements for Airflow and Hardware Maintenance on page 130
- Reinstalling T640 Standard or Quiet Front Fan Trays on page 211

Removing the T640 FPCs

The router holds up to eight FPCs, which are installed vertically in the front of the router. An empty FPC weighs approximately 25 lb (11.3 kg) and a fully configured FPC can weigh up to 32 lb (14.5 kg).

To remove an FPC (see Figure 77 on page 197):

1. Place an electrostatic bag or antistatic mat on a flat, stable surface.
2. Attach an electrostatic discharge (ESD) grounding strap to your bare wrist, and connect the strap to an approved site ESD grounding point. See the instructions for your site.
3. Before removing the FPCs, record their location in the chassis so that you can reinstall each FPC in the correct slot.
4. If you are removing a Type 2 FPC or Type 3 FPC, loosen the screws inside the ejector handles at the top and bottom of the FPC faceplate.
5. Simultaneously turn both the ejector handles counterclockwise to unseat the FPC.
6. Grasp the handles and slide the FPC straight out of the card cage halfway.
7. Place one hand around the front of the FPC (the PIC housing) and the other hand under it to support it. Slide the FPC completely out of the chassis, and place it on the antistatic mat or in the electrostatic bag.

Copyright © 2019, Juniper Networks, Inc.

CAUTION: The weight of the FPC is concentrated in the back end. Be prepared to accept the full weight—up to 32 lb (14.5 kg)—as you slide the FPC out of the chassis.

When the FPC is out of the chassis, do not hold it by the ejector handles or edge connectors. They cannot support its weight.

Do not stack FPCs on top of one another after removal. Place each one individually in an electrostatic bag or on its own antistatic mat on a flat, stable surface.

8. Repeat the procedure for each remaining FPC.

Figure 77: Removing a T640 FPC

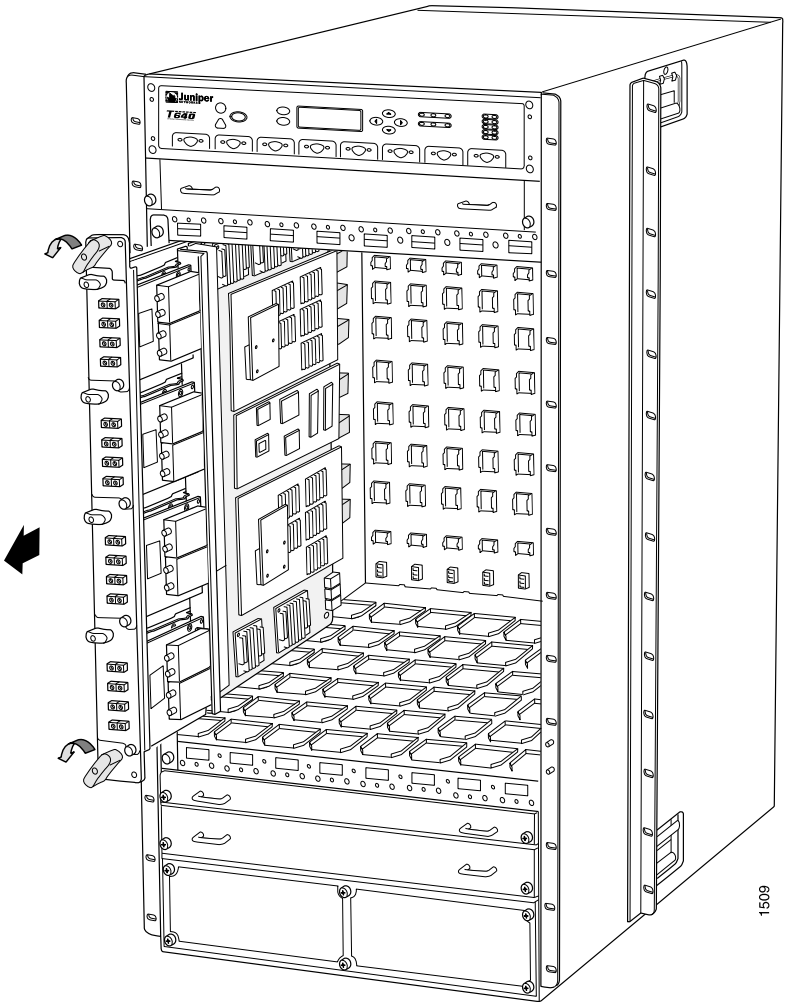

See Also • T640 FPC Description on page 73

- Holding and Storing T640 FPCs on page 471

Related Documentation

- T640 Preventing Electrostatic Discharge Damage on page 528
- T640 FPC Description on page 73
- T640 Switch Interface Boards (SIBs) Description on page 119
- T640 T Series Control Boards (T-CBs) Description on page 70
- T640 Power System Description on page 103
- T640 Cooling System Description on page 31

Attaching the T640 Router Installation Handle

To assist you with the installation of the T640 router, attach the installation handle over the power supply slots of the chassis. To remove the power supplies and attach the handle, starting with the upper power supply:

1. Attach an electrostatic discharge (ESD) grounding strap to your bare wrist, and connect the strap to an approved site ESD grounding point. See the instructions for your site.

2. Switch the circuit breakers on the two-input 160-A, three-input 240-A, or four-input 240-A power supply faceplate to the off position (**O**), or switch the power switch on the six-input DC power supply to the standby position. We recommend this even though the power supplies are not connected to power sources.

3. Loosen the captive screws on the lower corners of the power supply faceplate completely. Twist the ejector handles on the upper corners of the faceplate counterclockwise to unseat the power supply.

4. Twist the ejector handles on the upper corners of the faceplate counterclockwise to unseat the power supply.

5. Grasp the handle on the power supply faceplate and pull firmly to start removing the power supply. Slide it halfway out of the chassis (see Figure 64 on page 178).

   CAUTION: **Be prepared to support the full weight of the power supply as you remove it from the router.**

6. Place one hand underneath the power supply to support it and slide it completely out of the chassis.

Copyright © 2019, Juniper Networks, Inc.

7. Repeat the procedure for the other power supply.

8. Attach the installation handle by tightening the captive screws of the handle into the holes previously occupied by the captive screws of the power supplies (see Figure 65 on page 179).

Figure 78: Removing a Power Supply Before Installing the Installation Handle

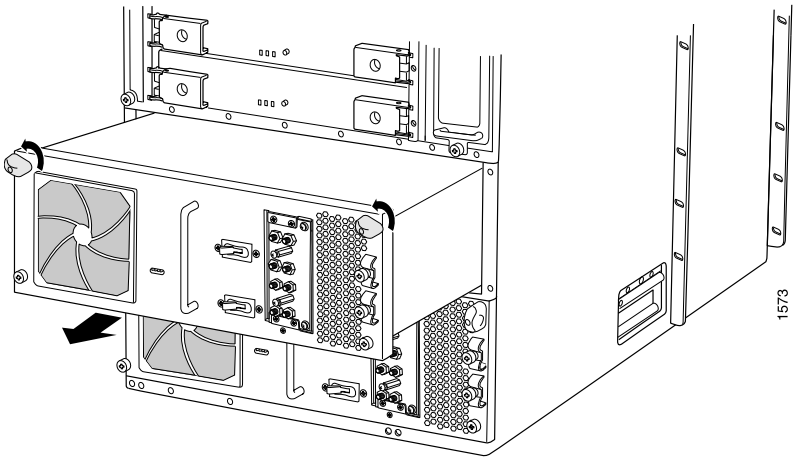

Figure 79: Attaching the Installation Handle

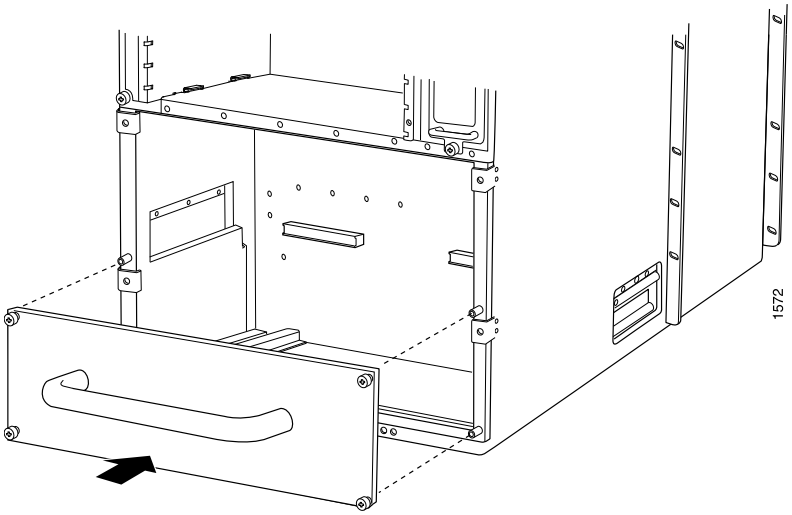

Installing the T640 Chassis in the Rack Manually

To install the T640 router in the rack (see Figure 81 on page 202):

CAUTION: If you are installing two routers in one rack, install the lower one first. Installing a router in the upper position in a rack or cabinet requires a lift.

CAUTION: Before front-mounting the router in a rack, have a qualified technician verify that the rack is strong enough to support the router's weight and is adequately supported at the installation site.

CAUTION: Lifting the chassis and mounting it in a rack requires four people. The empty chassis weighs approximately 205 lb (93 kg).

1. If you are installing the router in an open-frame rack, ensure that the rack is in its permanent location and is secured to the building. Ensure that the installation site allows adequate clearance for both airflow and maintenance. For details, see "T640 Clearance Requirements for Airflow and Hardware Maintenance" on page 130.

2. Attach the installation handle by tightening the captive screws of the handle into the holes previously occupied by the captive screws of the power supplies (see Figure 80 on page 200). Tighten the screws, using a Phillips (+) screwdriver, number 2.

Figure 80: Attaching the Installation Handle

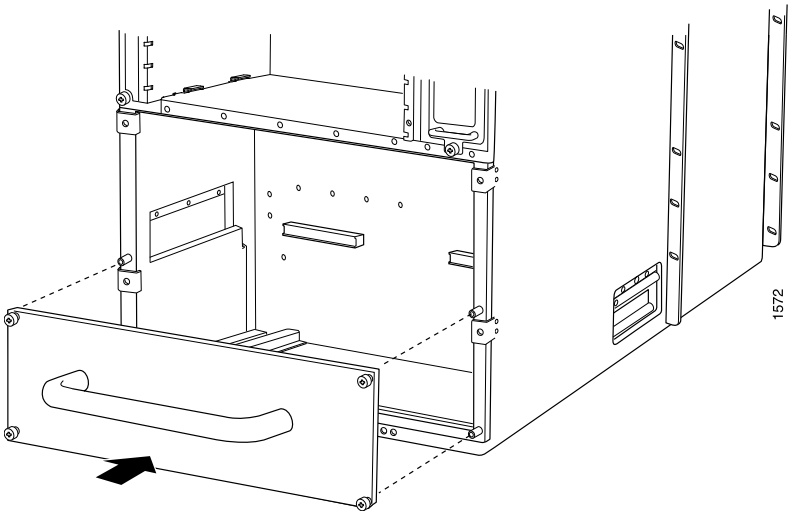

3. Position the router in front of the rack or cabinet, centering it in front of the mounting shelves. Use a pallet jack if one is available.

CAUTION: Do not lift the router using the installation handle, or the handles on the sides of the chassis. Use these handles only to help position the router.

4. With two people in the front and two people in the back, hold onto the bottom of the chassis and carefully lift it onto the mounting shelves.

Copyright © 2019, Juniper Networks, Inc.

WARNING: **To prevent injury, keep your back straight and lift with your legs, not your back. Avoid twisting your body as you lift. Balance the load evenly and be sure that your footing is solid.**

5. With one person pulling on the installation handle from the rear of the rack or cabinet while two people push on the front-mounting flanges, slide the router onto the mounting shelves until the mounting brackets or front-mounting flanges contact the rack rails or spacer bars (depending on your type of installation). The shelves ensure that the holes in the mounting brackets and the front-mounting flanges of the chassis align with the holes in the rack rails.

   If you center-mount the chassis, you use the center-mounting brackets attached to the chassis; if you front-mount the chassis, you use the front-mounting flanges.

6. If you are installing the router in a four-post rack or cabinet, install a mounting screw and a cage nut into each of the holes aligned with the threaded holes in the spacer bars. If you are installing the router in an open-frame rack, install a mounting screw into each of the open mounting holes aligned with the rack, starting from the bottom.

7. Loosen the captive screws on the installation handle completely, and remove the handle from the chassis.

8. Visually inspect the alignment of the router. If the router is installed properly in the rack, all the mounting screws on one side of the rack should be aligned with the mounting screws on the opposite side and the router should be level.

Copyright © 2019, Juniper Networks, Inc.

Figure 81: Installing the Router in the Rack

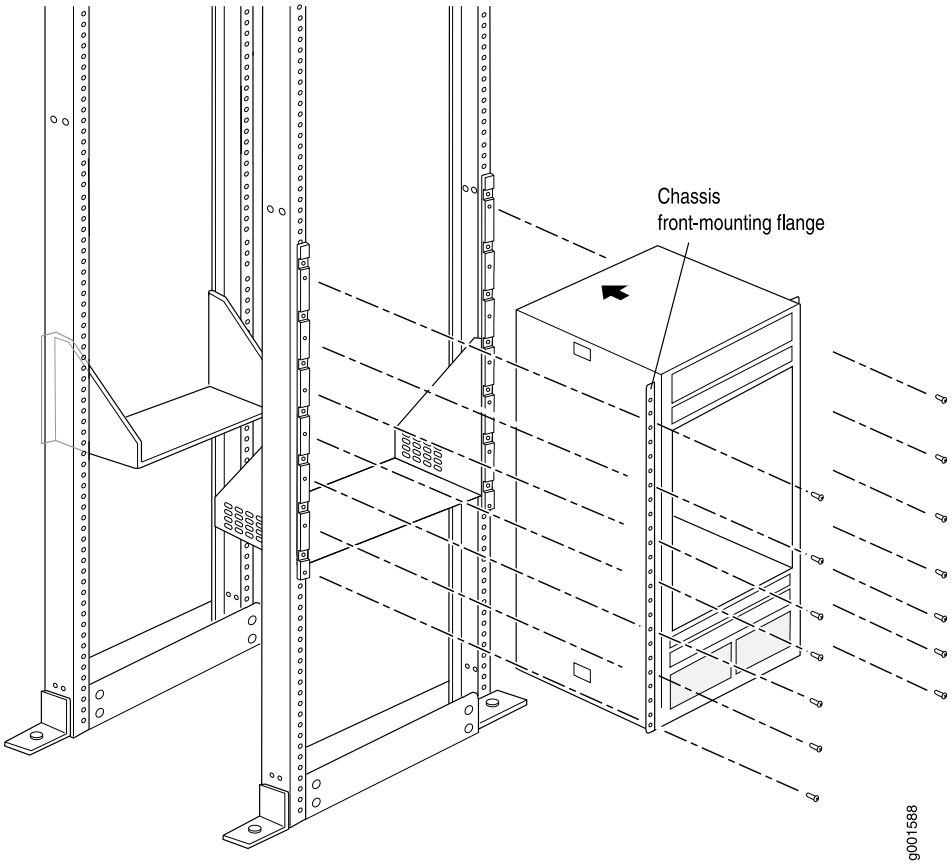

NOTE: This illustration depicts the router being installed in a four-post rack. For an illustration of the mounting hardware required for an open-frame rack, see Figure 62 on page 171.

Related Documentation

- T640 Preventing Electrostatic Discharge Damage on page 528
- T640 Router Installation Summary on page 159
- Installing the T640 Router Using a Mechanical Lift on page 176
- T640 Installation Safety Guidelines on page 533

Reinstalling Components in the T640 Chassis

After the T640 chassis is installed in the rack, you reinstall the removed components before booting and configuring the router. The following procedures describe how to reinstall components in the chassis, first in the rear and then in the front:

1. Reinstalling the T640 Standard or Quiet Rear Fan Tray on page 203
2. Reinstalling the T640 SCGs on page 204

Copyright © 2019, Juniper Networks, Inc.

3. Reinstalling the T640 Control Boards on page 205
4. Reinstalling the T640 SIBs on page 207
5. Reinstalling the T640 Power Supplies on page 208
6. Reinstalling the T640 FPCs on page 209
7. Reinstalling T640 Standard or Quiet Front Fan Trays on page 211
8. Reinstalling the T640 Cable Management System on page 213

Reinstalling the T640 Standard or Quiet Rear Fan Tray

To reinstall the rear fan tray (see Figure 82 on page 204):

1. Attach an electrostatic discharge (ESD) grounding strap to your bare wrist, and connect the strap to an approved site ESD grounding point. See the instructions for your site.

2. Grasp the fan tray by its handles and insert it straight into the chassis.

3. Tighten the captive screws on the top and bottom of the fan tray faceplate to secure it in the chassis.

Figure 82: Reinstalling the Rear Fan Tray

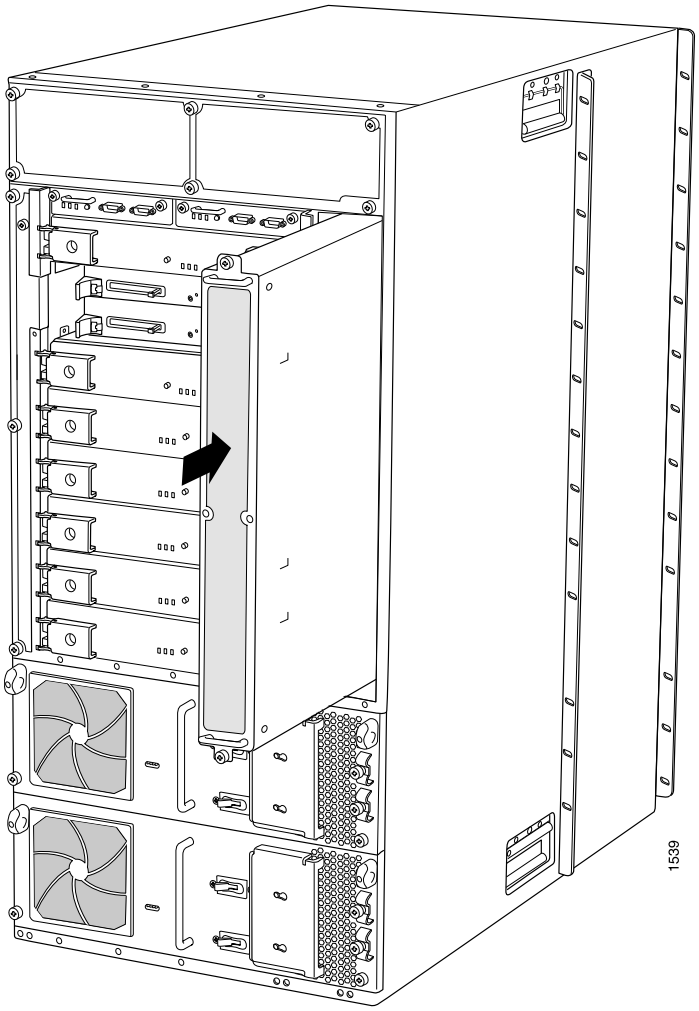

See Also

- T640 Cooling System Description on page 31
- Maintaining the T640 Fan Trays on page 465
- Troubleshooting the T640 Cooling System on page 491

Reinstalling the T640 SCGs

To reinstall the SCGs (see Figure 83 on page 205):

1. Attach an electrostatic discharge (ESD) grounding strap to your bare wrist, and connect the strap to an approved site ESD grounding point. See the instructions for your site.

2. Carefully align the sides of the SCG with the guides in the SCG slot.

Copyright © 2019, Juniper Networks, Inc.

3. Grasp the SCG by its handle and slide it straight into the chassis until it contacts the midplane.

4. Tighten the captive screws on the corners of the SCG faceplate.

5. Repeat the procedure to reinstall the remaining SCG.

Figure 83: Reinstalling an SCG

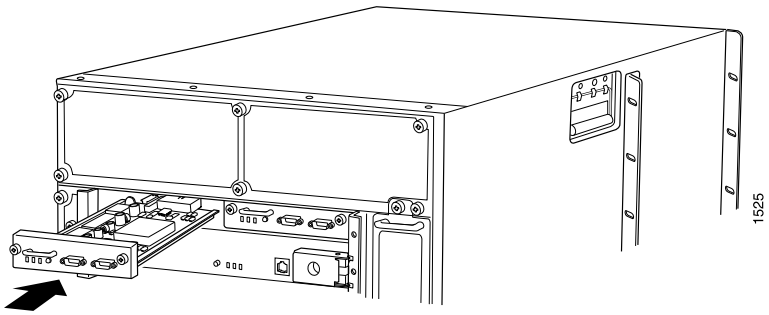

See Also

- T640 SONET Clock Generators (SCGs) Description on page 27
- Installing a T640 SCG on page 286
- Maintaining the T640 SCGs on page 463

Reinstalling the T640 Control Boards

To reinstall the control boards (see Figure 84 on page 206 and Figure 85 on page 206):

1. Attach an electrostatic discharge (ESD) grounding strap to your bare wrist, and connect the strap to an approved site ESD grounding point. See the instructions for your site.

2. Carefully align the sides of the control board with the guides inside the chassis.

3. Slide the control board into the chassis, carefully ensuring that it is correctly aligned.

4. Grasp both ejector handles and press them inward to seat the control board.

5. Tighten the captive screws on the ejector handles, using a Phillips (+) screwdriver, number 2.

6. Repeat the procedure to reinstall the remaining control board.

Copyright © 2019, Juniper Networks, Inc.

Figure 84: Reinstalling a T-CB

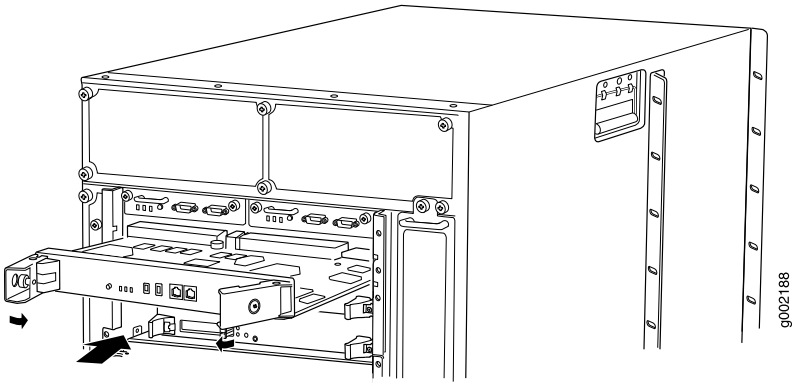

Figure 85: Reinstalling an LCC-CB

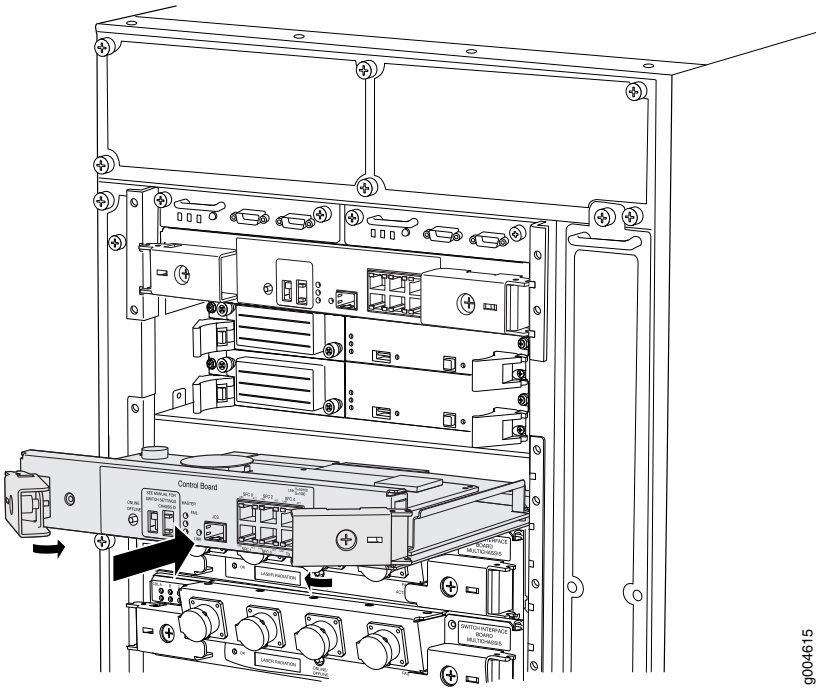

See Also

- T640 Preventing Electrostatic Discharge Damage on page 528
- T640 T Series Control Boards (T-CBs) Description on page 70
- T640 T Series Control Boards (T-CBs) LEDs on page 72
- Maintaining the T640 Control Boards on page 469

Copyright © 2019, Juniper Networks, Inc.

Reinstalling the T640 SIBs

To reinstall the SIBs (see Figure 86 on page 207):

1. Attach an electrostatic discharge (ESD) grounding strap to your bare wrist, and connect the strap to an approved site ESD grounding point. See the instructions for your site.
2. Place one hand underneath the SIB to support it. With the other hand, hold one of the ejector handles on the SIB faceplate.
3. Carefully align the sides of the SIB with the guides inside the chassis.
4. Slide the SIB into the chassis, carefully ensuring that it is correctly aligned.
5. Grasp both ejector handles and press them inward to seat the SIB.
6. Tighten the captive screws on the ejector handles.
7. Repeat the procedure for each of the remaining SIBs.

Figure 86: Reinstalling a SIB

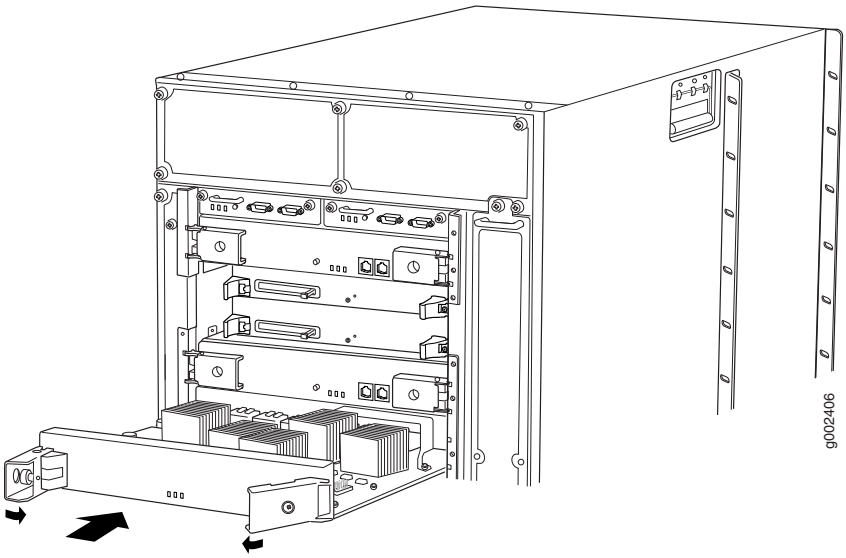

See Also

- T640 Preventing Electrostatic Discharge Damage on page 528
- T640 Switch Interface Boards (SIBs) Description on page 119
- Maintaining the T640 SIBs on page 481
- Replacing a T640 SIB on page 443

Copyright © 2019, Juniper Networks, Inc.

Reinstalling the T640 Power Supplies

Each two-input 160-A DC power supply weighs approximately 23 lb (10.5 kg). Each three-input 240-A DC power supply weighs approximately 25 lb (11.3 kg). Each four-input 240–A weighs approximately 26.6 lb (12.0 kg). Each six-input DC power supply weighs 39.7 lb (18.0 kg).

Reinstall the lower power supply first, then the upper power supply. To reinstall the power supplies, see Figure 87 on page 209.

1. Attach an electrostatic discharge (ESD) grounding strap to your bare wrist, and connect the strap to an approved site ESD grounding point. See the instructions for your site.

2. Switch the circuit breakers on the two-input 160-A, three-input 240-A, or four-input 240-A power supply faceplate to the off position (**O**), or the power switch on the AC power supplies or six-input DC power supplies to the standby position.

3. Using both hands, slide the power supply into the chassis until you feel resistance.

4. Twist the ejector handles at the upper corners of the power supply faceplate clockwise until they stop.

5. Tighten the captive screws at the lower corners of the power supply faceplate to secure the power supply in the chassis.

6. Repeat the procedure for the upper power supply.

CAUTION: "Removing the T640 Power Supplies" on page 187 shows the two-input 160-A DC power supply, but the procedure also applies to the three-input 240-A DC power supply, four-input 240-A DC power supply, or six-input DC power supply.

Copyright © 2019, Juniper Networks, Inc.

Figure 87: Reinstalling a Power Supply

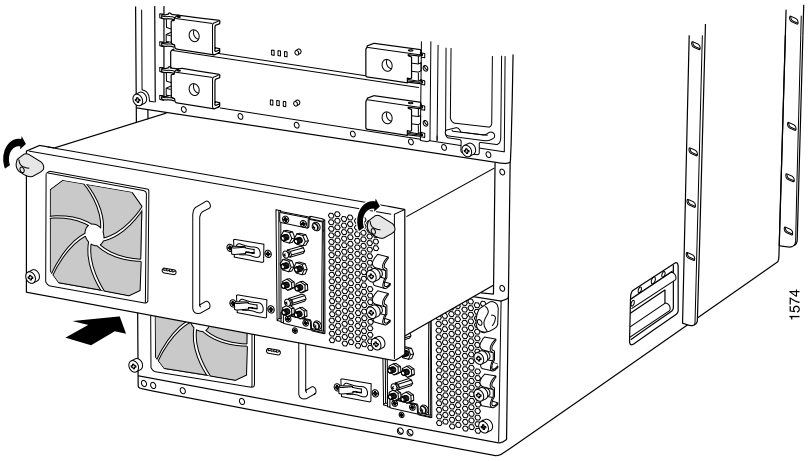

See Also

- T640 Power System Description on page 103
- Troubleshooting the T640 Power System on page 498
- T640 DC Power System Electrical Specifications on page 133

Reinstalling the T640 FPCs

To reinstall FPCs (see Figure 88 on page 210):

1. Attach an electrostatic discharge (ESD) grounding strap to your bare wrist, and connect the strap to an approved site ESD grounding point. See the instructions for your site.

2. Using the list you created when you removed the FPCs, locate the slot in the FPC card cage in which you plan to install the FPC.

3. Inspect the slots in the FPC card cage to verify that there are no missing or bent pins on the midplane.

4. Inspect each FPC to verify that the connectors are not misaligned or damaged.

   CAUTION: **When the FPC is out of the chassis, do not hold it by the ejector handles, bus bars, or edge connectors. They cannot support its weight.**

5. Lift the FPC into place and carefully align first the bottom and top of the FPC with the guides inside the card cage. Be sure the FPC is right-side up, with the components on the right of the FPC.

6. Gently rest the bottom edge of the FPC on the bottom edge of the slot opening, making contact a short distance forward of the power connector.

CAUTION: Take care not to bend or otherwise damage the power connector prongs.

7. Slide the FPC all the way into the card cage until you feel resistance.

8. Starting with the ejector handles on the FPC faceplate nearly horizontal, simultaneously turn both ejector handles clockwise to seat the FPC.

9. If you are installing a Type 2 FPC or Type 3 FPC, tighten the screws inside the ejector handles to secure the FPC. Do not overtighten them.

10. Repeat the procedure to reinstall each remaining FPC.

Figure 88: Reinstalling an FPC

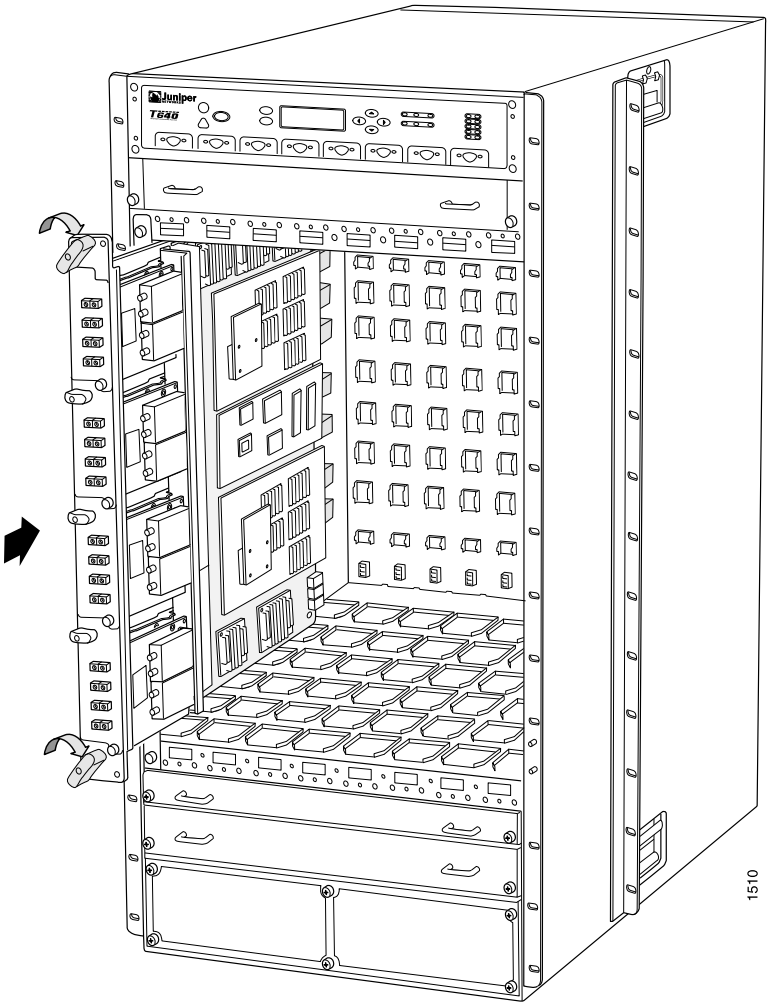

Copyright © 2019, Juniper Networks, Inc.

See Also

- T640 Preventing Electrostatic Discharge Damage on page 528
- T640 FPC Description on page 73
- Maintaining T640 FPCs on page 470
- Troubleshooting the T640 FPCs on page 496

Reinstalling T640 Standard or Quiet Front Fan Trays

To reinstall the standard front fan trays (see Figure 91 on page 212):

1. Attach an electrostatic discharge (ESD) grounding strap to your bare wrist, and connect the strap to an approved site ESD grounding point. See the instructions for your site.
2. Grasp one of the fan trays by its handles and insert it straight into the chassis.
3. Tighten the captive screw on each side of the fan tray faceplate to secure it in the chassis.
4. Repeat the procedure to reinstall the remaining fan tray.

To reinstall the quiet front fan trays:

1. Attach an electrostatic discharge (ESD) grounding strap to your bare wrist, and connect the strap to an approved site ESD grounding point. See the instructions for your site.
2. Locate the fan tray labeled **FAN-T-FTOP-S UPPER FANTRAY**.
3. Press the two latches located on each side of the quiet upper front fan tray up, and insert the fan tray straight into the upper front fan tray slot (see Figure 89 on page 212).
4. Grasp the upper front fan tray by its handles and insert it straight into the upper fan tray slot (see Figure 89 on page 212.
5. Tighten the captive screws on each side of the fan tray faceplate to secure it in the chassis.
6. Locate the quiet lower fan tray labeled **FAN-T-FBOT-S LOWER FANTRAY**.
7. Press the two latches located on each side of the quiet lower front fan tray up, and insert the fan tray straight into the lower front fan tray slot (see Figure 90 on page 212).
8. Tighten the captive screws on each side of the quiet lower front fan tray faceplate to secure it in the chassis.

Copyright © 2019, Juniper Networks, Inc.

Figure 89: Reinstalling the Quiet Upper Front Fan Tray

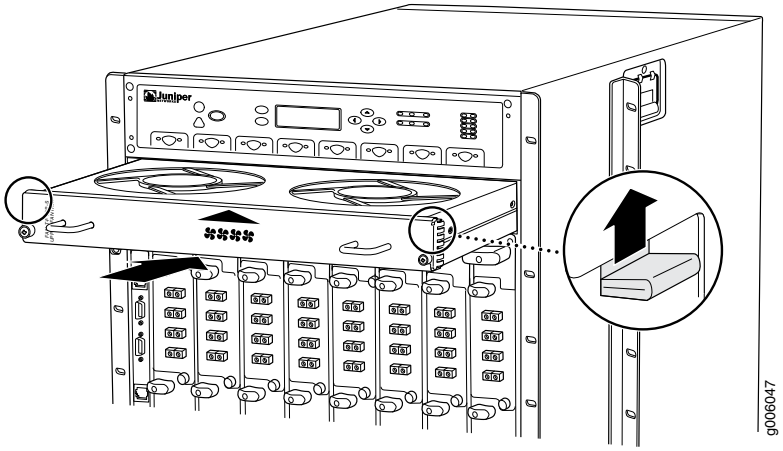

Figure 90: ReInstalling the Quiet Lower Front Fan Tray

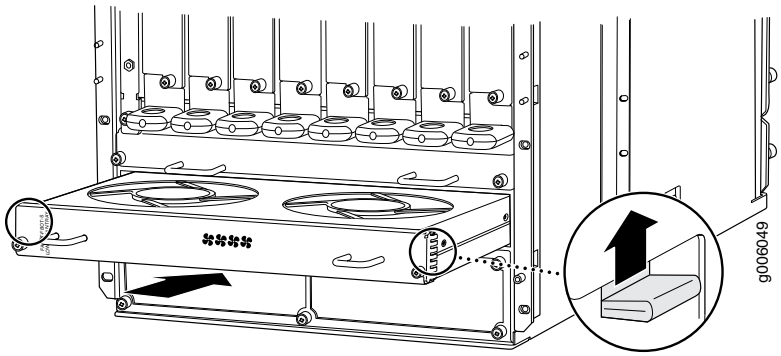

Figure 91: Reinstalling the Standard Upper Front Fan Tray

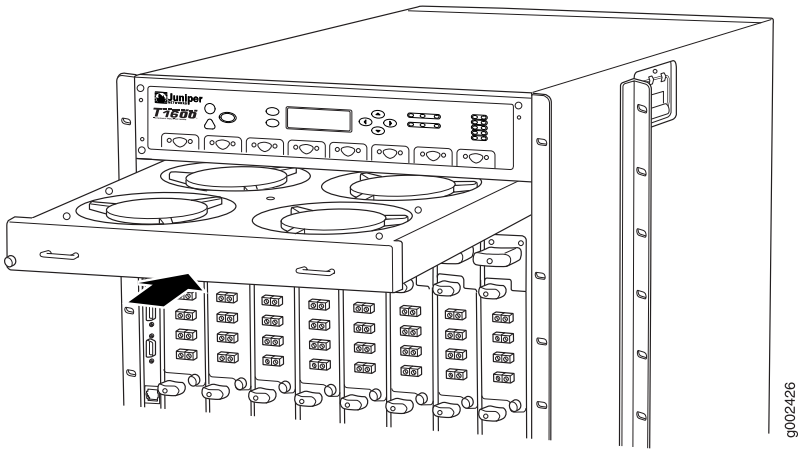

See Also

- T640 Preventing Electrostatic Discharge Damage on page 528
- T640 Cooling System Description on page 31
- Maintaining the T640 Fan Trays on page 465

Copyright © 2019, Juniper Networks, Inc.

- Troubleshooting the T640 Cooling System on page 491

Reinstalling the T640 Cable Management System

To reinstall the cable management system:

1. Attach an electrostatic discharge (ESD) grounding strap to your bare wrist, and connect the strap to one of the ESD points on the chassis.
2. Position the cable management system on the studs on the lower front of the chassis.
3. Insert the nuts through the holes in the cable management system onto the studs on the chassis.
4. Using a 3/8-in. nut driver, tighten the nuts securely.

See Also

- T640 Preventing Electrostatic Discharge Damage on page 528
- T640 Chassis Description on page 15
- Removing the T640 Cable Management System on page 193

Related Documentation

- T640 Preventing Electrostatic Discharge Damage on page 528
- T640 Chassis Description on page 15
- T640 Cooling System Description on page 31
- T640 SONET Clock Generators (SCGs) Description on page 27
- T640 T Series Control Boards (T-CBs) Description on page 70
- T640 Switch Interface Boards (SIBs) Description on page 119

Copyright © 2019, Juniper Networks, Inc.

Copyright © 2019, Juniper Networks, Inc.

CHAPTER 20

Connecting the T640 to Ground

- Tools and Parts Required to Ground the T640 Router on page 215
- Connecting the T640 Grounding Cable on page 216

Tools and Parts Required to Ground the T640 Router

- Grounding cable (which you must provide)
- Grounding lug (provided with the router)

Figure 92: Grounding Lug

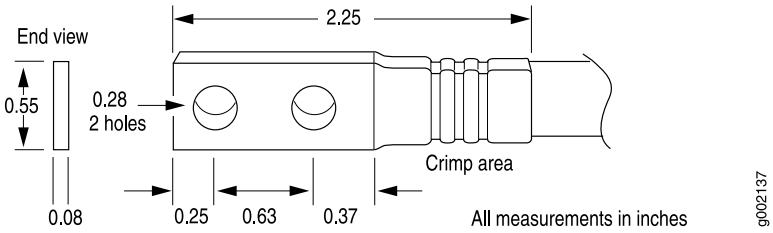

- M6 screws or UNC 1/4-20 screws
- Electrostatic discharge (ESD) grounding wrist strap

Related Documentation

- T640 Chassis Grounding Cable and Lug Specifications on page 126
- Connecting the T640 Grounding Cable on page 216

Connecting the T640 Grounding Cable

You ground the T640 router by attaching a grounding cable to the grounding points on the chassis. You must provide the grounding cable (the cable lugs are supplied with the router). For grounding cable specifications, see "T640 Chassis Grounding Cable and Lug Specifications" on page 126.

1. Attach an electrostatic discharge (ESD) grounding strap to your bare wrist, and connect the strap to an approved site ESD grounding point. See the instructions for your site.

2. Make sure that grounding surfaces are clean and brought to a bright finish before grounding connections are made.

3. Connect the grounding cable to a proper earth ground.

4. Verify that a licensed electrician has attached the cable lug provided with the router to the grounding cable.

5. Place the grounding cable lug over the grounding The left pair is sized for M6 bolts, and the right pair is sized for UNC 1/4-20 bolts.

6. Secure the grounding cable lug to the grounding points, first with the washers, then with the screws.

7. Verify that the grounding cabling is correct, that the grounding cable does not touch or block access to router components, and that it does not drape where people could trip on it.

Related Documentation

- T640 General Electrical Safety Guidelines and Electrical Codes on page 551
- Site Electrical Wiring Guidelines for Juniper Networks Devices on page 560

Copyright © 2019, Juniper Networks, Inc.

CHAPTER 21

Connecting the T640 to External Devices

- Overview of Connecting the T640 Router to External Devices on page 217
- Tools and Parts Required to Connect the T640 Router to External Devices on page 218
- Connecting the T640 Router to a Management Console or Auxiliary Device on page 218
- Connecting the T640 Router to a Network for Out-of-Band Management on page 221
- Connecting the T640 Router to an External Alarm-Reporting Device on page 223
- Connecting the T640 Router to an External Clocking Device on page 224
- Connecting PIC Cables to the T640 Router on page 225

Overview of Connecting the T640 Router to External Devices

After you have grounded the T640 Core Router, you can connect the following external devices:

- An external console or auxiliary device to the **CONSOLE** ports on the Connector Interface Panel (CIP).

  See "Connecting the T640 Router to a Management Console or Auxiliary Device" on page 218

- A laptop, modem, or other auxiliary device to the **AUXILIARY** ports on the Connector Interface Panel (CIP).

  See "Connecting the T640 Router to a Management Console or Auxiliary Device" on page 218.

- A management network to the **ETHERNET** ports on the Connector Interface Panel (CIP).

  See "Connecting the T640 Router to a Network for Out-of-Band Management" on page 221.

- An external alarm-reporting device to the alarm relay contacts on the CIP.

  See "Connecting the T640 Router to an External Alarm-Reporting Device" on page 223.

- An external clocking device to the **EXTERNAL CLOCK INPUTS** on the SONET clock generator with RJ-48 ports.

  See "Connecting the T640 Router to an External Clocking Device" on page 224.

Copyright © 2019, Juniper Networks, Inc.

NOTE: The external clock inputs on the SCG with DB-9 ports are not supported.

- A network connection to the ports on the PICs.

  See "Connecting PIC Cables to the T640 Router" on page 225.

Related Documentation

- Tools and Parts Required to Connect the T640 Router to External Devices on page 218

Tools and Parts Required to Connect the T640 Router to External Devices

To connect the router to management devices and PICs, you need the following tools and parts:

- Phillips (+) screwdrivers, numbers 1 and 2
- 2.5-mm flat-blade (-) screwdriver
- Electrostatic discharge (ESD) grounding wrist strap

Related Documentation

- Overview of Connecting the T640 Router to External Devices on page 217

Connecting the T640 Router to a Management Console or Auxiliary Device

To use a system console to configure and manage the Routing Engine, connect it to the appropriate **CONSOLE** port on the CIP. To use a laptop, modem, or other auxiliary device, connect it to the appropriate **AUXILIARY** port on the CIP. Both ports accept an RS-232 (EIA-232) serial cable with a DB-9 female connector. One DB-9/DB-9 cable is provided with the router. To connect a device to the **CONSOLE** port, and another device to the **AUXILIARY** port, you must supply another cable.

To connect a management console or auxiliary device:

1. Turn off the power to the console or auxiliary device.

2. Attach an electrostatic discharge (ESD) grounding strap to your bare wrist, and connect the strap to one of the ESD points on the chassis.

3. Connect one end (shown in Figure 93 on page 219) of a serial cable with a DB-9 female connector to the appropriate **CONSOLE** or **AUXILIARY** port (see Figure 94 on page 220). The ports labeled **HOST 0** connect to the Routing Engine in the upper Routing Engine slot (**RE0**), and the ports labeled **HOST 1** connect to the Routing Engine in the lower Routing Engine slot (**RE1**).

Copyright © 2019, Juniper Networks, Inc.

NOTE:

For console devices, configure the serial port to the following values:

- Baud rate—9600
- Parity—N
- Data bits—8
- Stop bits—1
- Flow control—none

4. Using a 2.5-mm flat-blade screwdriver, tighten the screws on the connector.

5. Attach the other end of the cable to the console or auxiliary device.

Figure 93: Console and Auxiliary Serial Port Connector

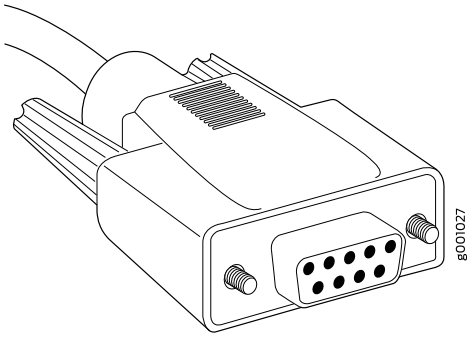

Figure 94: Console and Auxiliary Ports on the CIP

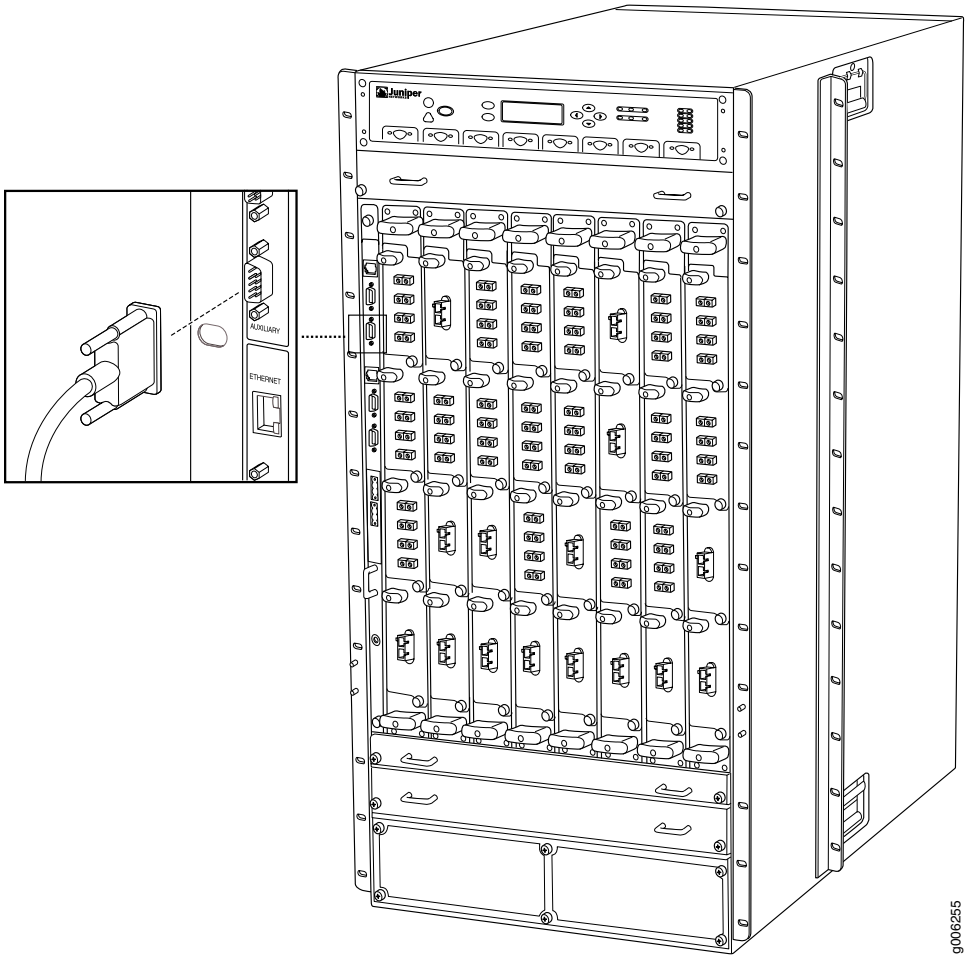

Related Documentation

- Overview of Connecting the T640 Router to External Devices on page 217
- Tools and Parts Required to Connect the T640 Router to External Devices on page 218
- T640 DB-9 Connector Pinouts for the Routing Engine AUXILIARY and CONSOLE Ports on page 154
- T640 Routing Engine Interface Cable and Wire Specifications on page 153

Copyright © 2019, Juniper Networks, Inc.

Connecting the T640 Router to a Network for Out-of-Band Management

To connect the Routing Engine to a network for out-of-band management, connect an Ethernet with RJ-45 connectors to the **ETHERNET** port on the CIP. One cable is provided with the router.

1. Attach an electrostatic discharge (ESD) grounding strap to your bare wrist, and connect the strap to one of the ESD points on the chassis.

2. Turn off the power to the management device.

3. Plug one end of the Ethernet cable (Figure 95 on page 221 shows the connector) in to the appropriate **ETHERNET** port on the CIP (see Figure 96 on page 222). The ports labeled **HOST 0** connect to the Routing Engine in the upper Routing Engine slot (**RE0**), and the ports labeled **HOST 1** connect to the Routing Engine in the lower Routing Engine slot (**RE1**).

4. Plug the other end of the cable into the network device.

Figure 95: Routing Engine Ethernet Cable Connector

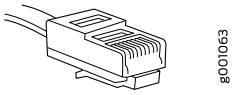

Figure 96: ETHERNET Port on the CIP

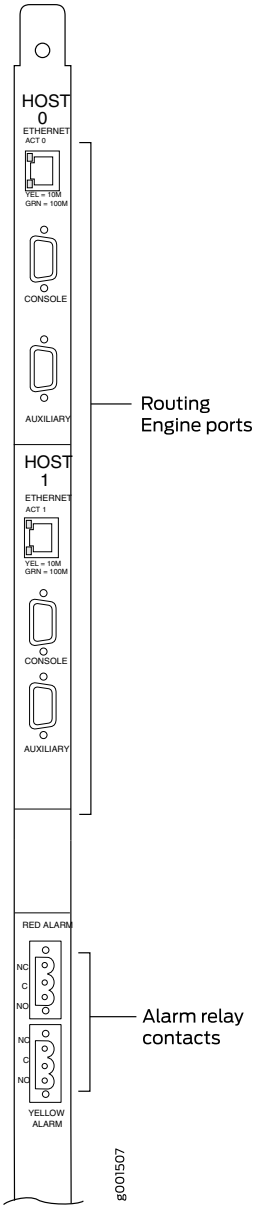

Related Documentation

- Overview of Connecting the T640 Router to External Devices on page 217
- Tools and Parts Required to Connect the T640 Router to External Devices on page 218
- T640 Routing Engine Interface Cable and Wire Specifications on page 153
- T640 RJ-45 Connector Pinouts for the Routing Engine ETHERNET Port on page 154

Copyright © 2019, Juniper Networks, Inc.

Connecting the T640 Router to an External Alarm-Reporting Device

To connect the router to external alarm-reporting devices, attach wires to the **RED ALARM** and **YELLOW ALARM** relay contacts on the CIP. A system condition that triggers the red or yellow alarm LED on the craft interface also activates the corresponding alarm relay contact.

The terminal blocks that plug into the alarm relay contacts are supplied with the router. They accept wire of any gauge between 28-AWG and 14-AWG (0.08 and 2.08 mm^2), which is not provided. Use the gauge of wire appropriate for the external device you are connecting.

To connect an external device to an alarm relay contact:

1. Prepare the required length of wire with gauge between 28-AWG and 14-AWG (0.08 and 2.08 mm^2).

2. Attach an electrostatic discharge (ESD) grounding strap to your bare wrist, and connect the strap to one of the ESD points on the chassis.

3. While the terminal block is not plugged into the relay contact, use a 2.5-mm flat-blade screwdriver to loosen the small screws on its side. With the small screws on its side facing left, insert wires into the slots in the front of the block based on the wiring for the external device. Tighten the screws to secure the wire.

4. Orient the terminal block according to the labels to the left of the appropriate relay contact (**NC** means “normally closed, **C** means “common,” and (**NO** means “normally open”).

5. Plug the terminal block into the relay contact and use a 2.5-mm flat-blade screwdriver to tighten the screws on the face of the block.

6. Attach the other end of the wires to the external device.

If attaching a reporting device for the other kind of alarm, repeat the procedure.

Related Documentation

- Overview of Connecting the T640 Router to External Devices on page 217
- T640 Routing Engine Interface Cable and Wire Specifications on page 153
- Tools and Parts Required to Connect the T640 Router to External Devices on page 218

Copyright © 2019, Juniper Networks, Inc.

Connecting the T640 Router to an External Clocking Device

To connect the router to one or two external clocking devices, connect a cable with RJ-48 connectors to one of the **EXTERNAL CLOCK INPUTS** ports on the SCG.

1. Attach an electrostatic discharge (ESD) grounding strap to your bare wrist, and connect the strap to one of the ESD points on the chassis.

2. Plug one end of the cable into the appropriate **EXTERNAL CLOCK INPUTS** port on the SCG.

3. Plug the other end of the cable into the T1 external clocking device.

4. Repeat the procedure for the other **EXTERNAL CLOCK INPUTS** port on the SCG.

5. Verify that the **LINK** LED for each port is lit steadily green.

6. Configure the port. See the **synchronization** statement for M Series and T Series in the .

7. Issue the **show chassis synchronization** command to check the status of the port.

   `user@host>` **show chassis synchronization**

```
user@host> show chassis synchronization

    Clock Synchronization Status :
      Clock module on SCG 0
        Current state            : master
        Current clock state      : locked to external-a
          Selected for           : 2 hours, 28 minutes, 4 seconds
          Selected since         : 2006-02-17 01:12:58 PST
        Configured sources
          Source      Priority   Deviation    Last deviation   Status
                                 (in ppm)     (in ppm)
          external-a  primary    measuring    -0.10            in-use
          external-b  secondary  -0.10        -0.10            qualified
    Clock Synchronization Status :
      Clock module on SCG 1
        Current state            : backup
        Current clock state      : locked to master SCG
          Selected for           : 19 hours, 49 minutes, 14 seconds
          Selected since         : 2006-02-16 07:51:48 PST
        Configured sources
          Source      Priority   Deviation    Last deviation   Status
                                 (in ppm)     (in ppm)
          external-a  primary    -0.25        -0.25            qualified
          external-b  secondary  -0.25        -0.25            qualified
```


Copyright © 2019, Juniper Networks, Inc.

Related Documentation

- T640 SONET Clock Generators (SCGs) Description on page 27
- T640 SONET Clock Generators (SCGs) LEDs on page 28
- Overview of Connecting the T640 Router to External Devices on page 217
- Tools and Parts Required to Connect the T640 Router to External Devices on page 218
- *T640 RJ-48 Connector Pinouts for the SCG EXTERNAL CLOCK INPUTS Ports*

Connecting PIC Cables to the T640 Router

The router supports PICs that use various kinds of network cable, including multimode and single-mode fiber-optic cable. For information about the type of cable used by each PIC, see the PIC guide for your router.

You connect PICs to the network by plugging in network cable. To connect cable to the PICs (see Figure 97 on page 226, which shows a fiber-optic PIC):

1. Have ready a length of the type of cable used by the PIC. For cable specifications, see *Determining Transceiver Support and Specifications for M Series and T Series Routers* in the *T640 Core Router Interface Module Reference*.

2. If the PIC cable connector port is covered by a rubber safety plug, remove the plug.

   WARNING: **Do not look directly into a fiber-optic transceiver or into the ends of fiber-optic cables. Fiber-optic transceivers and fiber-optic cable connected to a transceiver emit laser light that can damage your eyes.**

   CAUTION: **Do not leave a fiber-optic transceiver uncovered except when inserting or removing cable. The safety cap keeps the port clean and prevents accidental exposure to laser light.**

3. Insert the cable connector into the cable connector port on the PIC faceplate.

4. Arrange the cable in the cable management system to prevent it from dislodging or developing stress points. Secure the cable so that it is not supporting its own weight as it hangs to the floor. Place excess cable out of the way in a neatly coiled loop in the cable management system. Placing fasteners on the loop helps to maintain its shape.

   CAUTION: **Avoid bending fiber-optic cable beyond its minimum bend radius. An arc smaller than a few inches in diameter can damage the cable and cause problems that are difficult to diagnose.**

CAUTION: Do not let fiber-optic cable hang free from the connector. Do not allow fastened loops of cable to dangle, which stresses the cable at the fastening point.

Figure 97: Attaching a Cable to a PIC

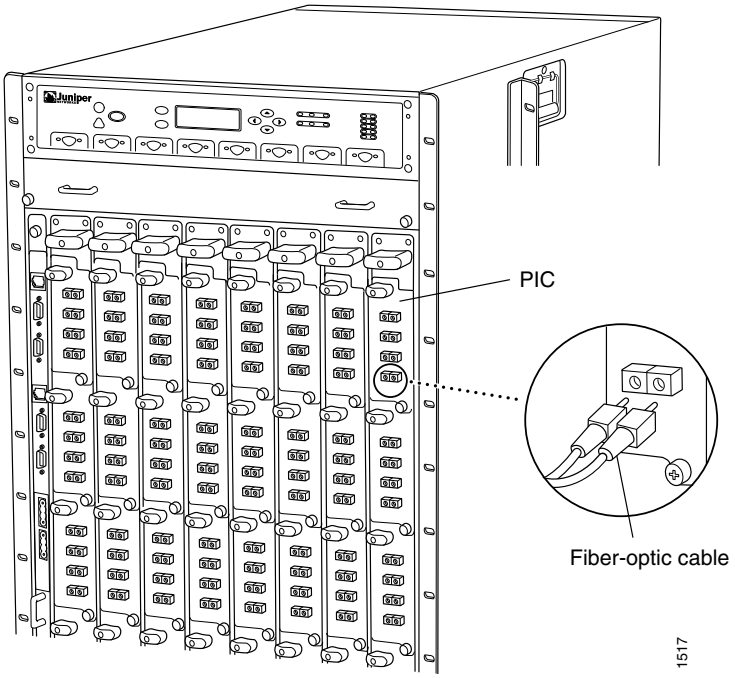

Related Documentation

- T640 PIC Description on page 85
- Overview of Connecting the T640 Router to External Devices on page 217
- Tools and Parts Required to Connect the T640 Router to External Devices on page 218

Copyright © 2019, Juniper Networks, Inc.

CHAPTER 22

Providing Power to the T640

- Tools and Parts Required to Provide Power to the T640 Router on page 227
- Connecting DC Power to a T640 Router with Two-Input 160-A DC Power Supplies on page 228
- Connecting DC Power to a T640 Router with Three-input 240-A DC Power Supplies (2-INPUT Mode) on page 230
- Connecting DC Power to a T640 Router with Four-Input 240-A DC Power Supplies on page 232
- Connecting DC Power to the T640 Router (Six 60-A Inputs to Six-Input DC Power Supplies) on page 235
- Connecting DC Power to the T640 Router (Five 60-A Inputs to Six-Input DC Power Supplies) on page 239
- Connecting DC Power to the T640 Router (Four 60-A Inputs to Six-Input DC Power Supplies) on page 244
- Powering On a DC-Powered T640 Router on page 247
- Connecting AC Power to a T640 Router with Three-Phase Delta AC Power Supplies on page 249
- Connecting AC Power to a T640 Router with Three-Phase Wye AC Power Supplies on page 252
- Powering On an AC-Powered T640 Router on page 254
- Powering Off the T640 Router on page 256

Tools and Parts Required to Provide Power to the T640 Router

To provide power to the router, you need:

- DC-powered routers: 7/16-in. (11 mm) hexagonal-head external drive socket wrench, or nut driver, with a torque range between 23 lb-in. (2.6 Nm) and 25 lb-in. (2.8 Nm), for tightening nuts to terminal studs on each power supply on a DC-powered router.

CAUTION: You must use an appropriate torque-controlled tool to tighten the nuts. Applying excessive torque damages the terminal studs and the power supply. The absolute maximum torque that may be applied to this nut is 45 lb-in. (5.0 Nm).

- AC-powered router:
  - Phillips (+) screwdriver, number 2 to access the metal AC wiring compartment
  - 1/4-in. slotted screwdriver or 5/32-in (4-mm) Allen wrench to attach the ground wire and input terminal wires of the AC power cord.

NOTE: The terminal connections have either slotted screws or hex screws. Use a 1/4-in. slotted screwdriver for the slotted screws. Use a 5/32-in (4-mm) Allen wrench for the 5/16-in hex screws.

- Electrostatic discharge (ESD) grounding wrist strap

Related Documentation

- Connecting DC Power to a T640 Router with Two-Input 160-A DC Power Supplies on page 228
- Connecting DC Power to a T640 Router with Three-input 240-A DC Power Supplies (2-INPUT Mode) on page 230
- Connecting DC Power to a T640 Router with Four-Input 240-A DC Power Supplies on page 232
- Connecting DC Power to the T640 Router (Six 60-A Inputs to Six-Input DC Power Supplies) on page 235
- Connecting DC Power to the T640 Router (Five 60-A Inputs to Six-Input DC Power Supplies) on page 239
- Connecting DC Power to the T640 Router (Four 60-A Inputs to Six-Input DC Power Supplies) on page 244
- Connecting AC Power to a T640 Router with Three-Phase Wye AC Power Supplies on page 252
- Connecting AC Power to a T640 Router with Three-Phase Delta AC Power Supplies on page 249
- T640 General Electrical Safety Guidelines and Electrical Codes on page 551

Connecting DC Power to a T640 Router with Two-Input 160-A DC Power Supplies

To connect the DC source power cables to each power supply in the T640 router:

1. Switch off the dedicated customer site circuit breakers. Follow the instructions for your site. Ensure that the voltage across the DC power source cable leads is 0 V and that there is no chance that the cable leads might become active during installation.

2. Switch the circuit breakers on the power supply faceplate to the off position (**O**).

3. Remove the clear plastic cover protecting the terminal studs on the faceplate.

Copyright © 2019, Juniper Networks, Inc.

4. Remove the nut and washer from each power terminal stud. If no washers and nuts are already installed, they should be in the accessory box.

5. Secure the cable lug on the DC power cable to the terminal stud, first with a washer, then with a nut (see Figure 98 on page 230). Use a 7/16-in. (11 mm) nut driver or wrench to tighten the nut. Apply between 23 lb-in. (2.6 Nm) and 25 lb-in. (2.8 Nm) of torque to each nut:

   a. Secure each positive (+) DC source power cable lug to a **RTN** (return) terminal.

   b. Secure each negative (–) DC source power cable lug to a **–48V** (input) terminal.

NOTE: All inputs on the two-input 160-A DC power supply in slot **PEM0** must be powered by dedicated power feeds derived from feed A, and all inputs on the two-input 160-A DC power supply in slot **PEM1** must be powered by dedicated power feeds derived from feed B. This configuration provides the commonly deployed A/B feed redundancy for the system.

CAUTION: You must ensure that power connections maintain the proper polarity. The power source cables might be labeled **(+)** and **(–)** to indicate their polarity. There is no standard color coding for DC power cables. The color coding used by the external DC power source at your site determines the color coding for the leads on the power cables that attach to the terminal studs on each power supply.

6. Loosen the captive screws on the cable restraints on the right edge of the power supply faceplate.

7. Route the positive and negative DC power cables through the top and bottom of each cable restraint.

8. Tighten the cable restraint captive screws to hold the power cables in place.

9. Verify that the power cabling is correct, that the power cables are not touching or blocking access to router components, and that they do not drape where people could trip on them.

10. Replace the clear plastic cover over the terminal studs on the faceplate.

Copyright © 2019, Juniper Networks, Inc.

Figure 98: Connecting DC Power to a Two-Input 160-A DC Power Supply

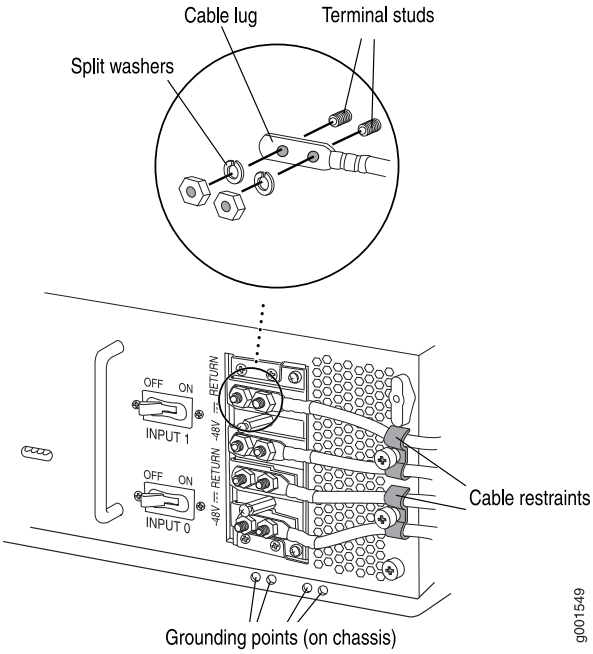

Related Documentation

- Connecting the T640 Grounding Cable on page 216
- Connecting DC Power to a T640 Router with Three-input 240-A DC Power Supplies (2-INPUT Mode) on page 230
- T640 General Electrical Safety Guidelines and Electrical Codes on page 551
- Site Electrical Wiring Guidelines for Juniper Networks Devices on page 560

Connecting DC Power to a T640 Router with Three-input 240-A DC Power Supplies (2-INPUT Mode)

To connect the DC source power cables to the T640 router:

1. Ensure that the voltage across the DC power source cable leads is 0 V and that there is no chance that the cable leads might become active during installation.

2. Attach an electrostatic discharge (ESD) grounding strap to your bare wrist, and connect the strap to one of the ESD points on the chassis.

3. Verify that the input mode switch is correctly set to **2–INPUT** mode. See "Setting the Input Mode Switch on a Three-Input 240-A DC Power Supply for a T640 Router" on page 374.

4. Replace the cable restraint, if needed. See "Replacing the T640 Cable Restraint on a Three-Input 240-A DC Power Supply" on page 376.

Copyright © 2019, Juniper Networks, Inc.

5. Switch the circuit breakers on the power supply faceplate to the **OFF** position (**O**).

6. Remove the clear plastic cover protecting the terminal studs on the faceplate.

7. Remove the nut and washer from the power terminal studs for **INPUT O** and **INPUT 1**. **INPUT 2** is not supported for the T640 router. If no washers and nuts are already installed, they should be in the accessory box.

8. Secure the cable lug on the DC power cable to the terminal studs for **INPUT O** and **INPUT 1**, first with a washer, then with a nut (see Figure 99 on page 232). Use a 7/16-in. (11 mm) nut driver or wrench to tighten the nut. Apply between 23 lb-in. (2.6 Nm) and 25 lb-in. (2.8 Nm) of torque to each nut):

   a. Secure each positive (+) DC source power cable lug to a **RTN** (return) terminal.

   b. Secure each negative (–) DC source power cable lug to a **–48V** (input) terminal.

NOTE: **INPUT 0** and **INPUT 1** on the three-input 240-A DC power supply in slot **PEM0** must be powered by dedicated power feeds derived from feed A, and **INPUT 0** and **INPUT 1** on the three-input 240-A DC power supply in slot **PEM1** must be powered by dedicated power feeds derived from feed B. This configuration provides the commonly deployed A/B feed redundancy for the system. **INPUT 2** is not used for the T640 router.

CAUTION: You must ensure that power connections maintain the proper polarity. The power source cables might be labeled **(+)** and **(–)** to indicate their polarity. There is no standard color coding for DC power cables. The color coding used by the external DC power source at your site determines the color coding for the leads on the power cables that attach to the terminal studs on each power supply.

9. Loosen the captive screw or screws on the cable restraint on the right edge of the power supply faceplate.

10. Route the DC power cables through the cable restraint.

11. Tighten the cable restraint captive screw or screws to hold the power cables in place.

Copyright © 2019, Juniper Networks, Inc.

12. Verify that the power cabling is correct, that the power cables are not touching or blocking access to router components, and that they do not drape where people could trip on them.

13. Replace the clear plastic cover over the terminal studs on the faceplate.

Figure 99: Connecting DC Power to a Three-Input 240-A DC Power Supply in 2-INPUT Mode

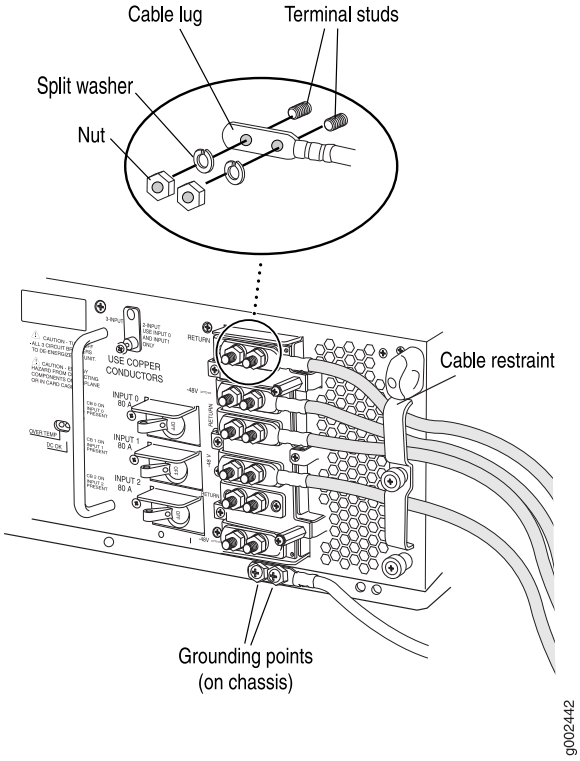

Related Documentation

- T640 Preventing Electrostatic Discharge Damage on page 528
- T640 Power System Description on page 103
- T640 DC Power Distribution on page 138
- T640 DC Power Cable and Lug Specifications on page 140
- T640 General Electrical Safety Guidelines and Electrical Codes on page 551
- Site Electrical Wiring Guidelines for Juniper Networks Devices on page 560

Connecting DC Power to a T640 Router with Four-Input 240-A DC Power Supplies

You connect DC power to the router by attaching power cables from the DC power sources to the terminal studs on the power supply faceplates. You must provide power cables (the cable lugs are supplied with the router).

Copyright © 2019, Juniper Networks, Inc.

To connect the DC source power cables to the router, follow this procedure for each power supply:

1. Ensure that the voltage across the DC power source cable leads is 0 V and that there is no chance that the cable leads might become active during installation.

   CAUTION: **You must ensure that power connections maintain the proper polarity. The power source cables might be labeled (+) and (–) to indicate their polarity. There is no standard color coding for DC power cables. The color coding used by the external DC power source at your site determines the color coding for the leads on the power cables that attach to the terminal studs on each power supply.**

2. Attach an electrostatic discharge (ESD) grounding strap to your bare wrist, and connect the strap to one of the ESD points on the chassis.

3. Switch the circuit breakers on the power supply faceplate to the **OFF** position (**O**).

4. Remove the clear plastic cover protecting the terminal studs on the faceplate.

5. Remove the nut and washer from each power terminal stud. If no washers and nuts are already installed, they should be in the accessory box.

6. Attach the lugs on the DC source power cables to the terminal studs. Secure the cable lugs to the terminal studs, first with the washers, then with the nuts.

   a. Attach the positive (+) DC source power cable lugs to the **RTN** (return) terminals.

   b. Attach the negative (–) DC source power cable lugs to the **–48V** (input) terminals.

   Using a 7/16-in. (11 mm) nut driver, tighten the nuts (see Figure 100 on page 234). Apply between 23 lb-in. (2.6 Nm) and 25 lb-in. (2.8 Nm) of torque to each nut.

   CAUTION: **You must use an appropriate torque-controlled tool to tighten the nuts. Applying excessive torque damages the terminal studs and the power supply. The absolute maximum torque that may be applied to this nut is 45 lb-in. (5.0 Nm).**

   CAUTION: **All inputs on the DC power supply in slot PEM0 must be powered by dedicated power feeds derived from feed A, and all inputs on the DC power supply in slot PEM1 must be powered by dedicated power**

feeds derived from feed B. This configuration provides the commonly deployed A/B feed redundancy for the system.

7. Loosen the captive screws on the cable restraint on the right edge of the power supply faceplate (using a Phillips (+) screwdriver, number 2).

8. Route the positive and negative DC power cables through the cable restraint.

9. Tighten the cable restraint captive screws to hold the power cables in place.

10. Verify that the power cabling is correct, that the power cables are not touching or blocking access to router components, and that they do not drape where people could trip on them.

11. Replace the clear plastic cover over the terminal studs on the faceplate.

Figure 100: Connecting Power to the Four-Input 240-A DC Power Supply

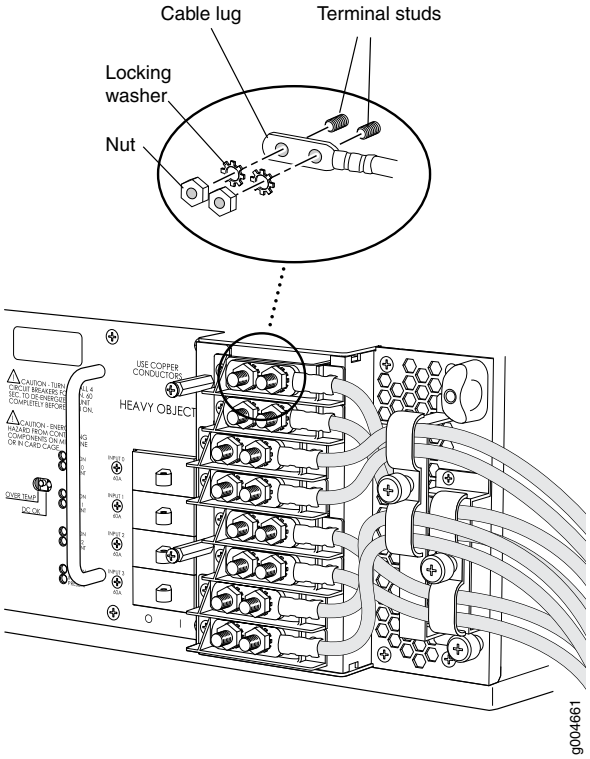

Related Documentation

- T640 Power System Description on page 103
- T640 DC Power Distribution on page 138

Copyright © 2019, Juniper Networks, Inc.

- T640 DC Power Cable and Lug Specifications on page 140
- T640 General Electrical Safety Guidelines and Electrical Codes on page 551
- Site Electrical Wiring Guidelines for Juniper Networks Devices on page 560

Connecting DC Power to the T640 Router (Six 60-A Inputs to Six-Input DC Power Supplies)

You connect DC power to the router by attaching power cables from the DC power sources to the terminal studs on the power supply faceplates. You must provide power cables (the cable lugs are supplied with the router).

CAUTION: All connected inputs on the DC power supply in slot PEM0 must be powered by dedicated power feeds derived from feed A, and all connected inputs on the DC power supply in slot PEM1 must be powered by dedicated power feeds derived from feed B. This configuration provides the commonly deployed A/B feed redundancy for the system.

NOTE: We recommend that the positive (+) DC source power cables for the RTN (return) terminals be 2.6 in. (6.6 cm) longer than the negative (–) DC source power cables for the –48 V (input) terminals.

CAUTION: You must use an appropriate torque-controlled tool to tighten the nuts. Applying excessive torque damages the terminal studs and the power supply. The absolute maximum torque that may be applied to this nut is 45 lb-in. (5.0 Nm).

CAUTION: You must ensure that power connections maintain the proper polarity. The power source cables might be labeled (+) and (–) to indicate their polarity. There is no standard color coding for DC power cables. The color coding used by the external DC power source at your site determines the color coding for the leads on the power cables that attach to the terminal studs on each power supply.

Copyright © 2019, Juniper Networks, Inc.

To connect DC source power cables to the router, follow this procedure for each DC power supply:

1. Verify that a properly rated customer site circuit breaker for each DC power cable has been installed. See the DC power electrical safety guidelines for your router for more information.

2. Switch off the customer site circuit breakers. Ensure that the voltage across the DC power source cable leads is 0 V and that there is no chance that the cable leads might become active during installation.

3. Verify that a licensed electrician has attached appropriate cable lugs to the DC power cables. See the DC power cable and lug specifications for your router for more information.

4. Switch the power switch on the power supply faceplate to the standby position.

5. Remove the clear plastic cover protecting the terminal studs on the faceplate.

6. Remove the nut and washer from each power terminal stud to be connected. If no washers and nuts are already installed, they should be in the accessory box.

7. Remove the captive screws on all three cable restraints on the right edge of the power supply faceplate (using a Phillips (+) screwdriver, number 2).

8. Route the negative (–) DC source power cables for **INPUT 0**, **INPUT 1**, **INPUT 3**, and **INPUT 4** over the smallest cable restraint on the far right. The cable restraint is marked as follows top to bottom: **INPUT 0**, **INPUT 1**, **INPUT 3**, and **INPUT 4**.

   NOTE: **You must route the cables in the locations as marked to be able to replace the clear plastic cover over the terminal studs.**

   Attach the negative (–) DC source power cable lugs **INPUT 0**, **INPUT 1**, **INPUT 3**, and **INPUT 4** to the –48 V (input) terminals on the right. Secure the cable lugs to the terminal studs, first with the washers, then with the nuts. Using a 7/16-in. (11 mm) nut driver, tighten the nuts. Apply between 23 lb-in. (2.6 Nm) and 25 lb-in. (2.8 Nm) of torque to each nut.

Copyright © 2019, Juniper Networks, Inc.

Figure 101: Connecting DC Power Cables

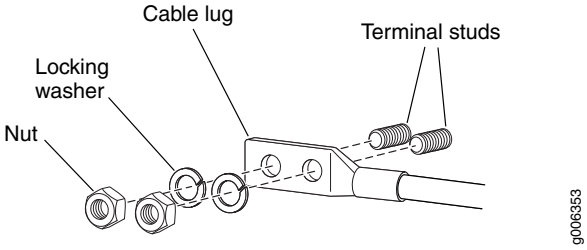

Figure 102: Connecting Negative (–) DC Power Cables to INPUT 0, INPUT 1, INPUT 3, and INPUT 4

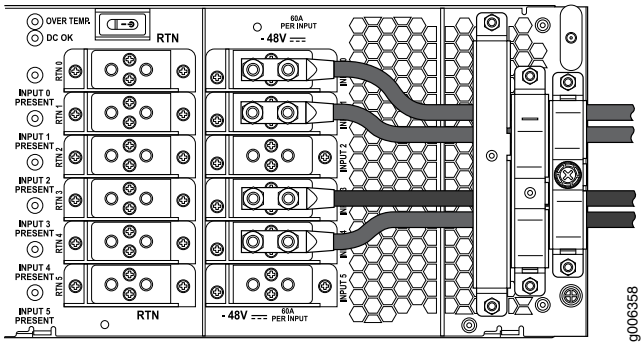

9. Replace the smallest cable restraint on the far right, and tighten the captive screw to hold the power cables for **INPUT 0**, **INPUT 1**, **INPUT 3**, and **INPUT 4** in place.

10. Route the negative (–) DC source power cables for **INPUT 2** and **INPUT 5** through the middle cable restraint. The middle cable restraint is marked as follows from top to bottom: **INPUT 2**, **RTN 2**, **RTN 5**, and **INPUT 5**.

    NOTE: **You must route the cables in the locations as marked to be able to replace the clear plastic cover over the terminal studs.**

    Attach the negative (–) DC source power cable lugs to the –48 V (input) terminals on the right. Secure the cable lugs to the terminal studs, first with the washers, then with the nuts. Using a 7/16-in. (11 mm) nut driver, tighten the nuts. Apply between 23 lb-in. (2.6 Nm) and 25 lb-in. (2.8 Nm) of torque to each nut.

Copyright © 2019, Juniper Networks, Inc.

Figure 103: Connecting Negative (–) DC Power Cables to INPUT 2 and INPUT 5

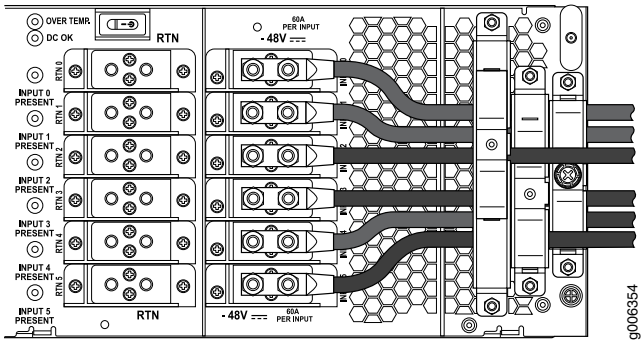

11. Route the positive (+) DC source power cables for **RTN 2** and **RTN 5** over the middle cable restraint. The middle cable restraint is marked as follows from top to bottom: **INPUT 2**, **RTN 2**, **RTN 5**, and **INPUT 5**.

    NOTE: **You must route the cables as marked to be able to replace the clear plastic cover over the terminal studs.**

    Attach the positive (+) DC source power cable lugs **RTN 2** and **RTN 5** to the RTN (return) terminals on the left. Secure the cable lugs to the terminal studs, first with the washers, then with the nuts. Using a 7/16-in. (11 mm) nut driver, tighten the nuts. Apply between 23 lb-in. (2.6 Nm) and 25 lb-in. (2.8 Nm) of torque to each nut.

12. Replace the middle cable restraint, and tighten the captive screw to hold the power cables for **INPUT 2**, **INPUT 5**, **RTN 2**, and **RTN 5** in place.

13. Route the positive (+) DC source power cables for **RTN 0**, **RTN 1**, **RTN 3**, and **RTN 4** over the largest cable restraint on the left. The left cable restraint is marked as follows from top to bottom: **RTN 0**, **RTN 1**, **RTN 3**, and **RTN 4**.

    NOTE: **You must route the cables as marked to be able to replace the clear plastic cover over the terminal studs.**

    Attach the positive (+) DC source power cable lugs to the **RTN 0**, **RTN 1**, **RTN 3**, and **RTN 4** terminals on the left. Secure the cable lugs to the terminal studs, first with the washers, then with the nuts. Using a 7/16-in. (11 mm) nut driver, tighten the nuts. Apply between 23 lb-in. (2.6 Nm) and 25 lb-in. (2.8 Nm) of torque to each nut.

14. Replace the left cable restraint, and tighten the captive screw to hold the power cables for **RTN 0**, **RTN 1**, **RTN 3**, and **RTN 4** in place.

Copyright © 2019, Juniper Networks, Inc.

Figure 104: Connecting Positive (+) DC Power Cables to RTN 2, RTN 5, RTN 0, RTN 1, RTN 3, and RTN 4

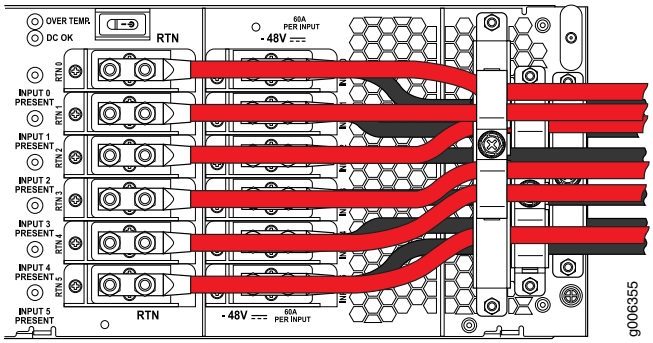

15. Verify that the power cabling is correct, that the power cables are not touching or blocking access to router components, and that they do not drape where people could trip on them.

16. Replace the clear plastic cover over the terminal studs on the faceplate.

Related Documentation

- Tools and Parts Required to Provide Power to the T640 Router on page 227
- Connecting DC Power to the T640 Router (Four 60-A Inputs to Six-Input DC Power Supplies) on page 244
- Connecting DC Power to the T640 Router (Five 60-A Inputs to Six-Input DC Power Supplies) on page 239
- *Powering On the T640 Router*
- Configuring DC Power on a T640 Router on page 263
- Troubleshooting the T640 Power System on page 498
- T640 DC Power System Requirements on page 136
- T640 DC Power Cable and Lug Specifications on page 140
- T640 General Electrical Safety Guidelines and Electrical Codes on page 551
- Site Electrical Wiring Guidelines for Juniper Networks Devices on page 560

Connecting DC Power to the T640 Router (Five 60-A Inputs to Six-Input DC Power Supplies)

You connect DC power to the router by attaching power cables from the DC power sources to the terminal studs on the power supply faceplates. You must provide power cables (the cable lugs are supplied with the router).

CAUTION: Do not use a terminal jumper for 60-A DC power cables. Using a terminal jumper is not supported for this procedure. Doing so will cause a short across the inputs and trip your external circuit breaker.

CAUTION: All connected inputs on the DC power supply in slot PEM0 must be powered by dedicated power feeds derived from feed A, and all connected inputs on the DC power supply in slot PEM1 must be powered by dedicated power feeds derived from feed B. This configuration provides the commonly deployed A/B feed redundancy for the system.

CAUTION: You must use an appropriate torque-controlled tool to tighten the nuts. Applying excessive torque damages the terminal studs and the power supply. The absolute maximum torque that may be applied to this nut is 45 lb-in. (5.0 Nm).

CAUTION: You must ensure that power connections maintain the proper polarity. The power source cables might be labeled (+) and (–) to indicate their polarity. There is no standard color coding for DC power cables. The color coding used by the external DC power source at your site determines the color coding for the leads on the power cables that attach to the terminal studs on each power supply.

NOTE: We recommend that the positive (+) DC source power cables to be connected to the RTN (return) terminals be 2.6 in. (6.6 cm) longer than the negative (–) DC source power cables to be connected to the –48 V (input) terminals.

To connect five 60-A DC source power cables to the router, follow this procedure for each DC power supply:

1. Verify that a properly rated customer site circuit breaker for each DC power cable has been installed. See the DC power electrical safety guidelines for your router for more information.

2. Switch off the customer site circuit breakers. Ensure that the voltage across the DC power source cable leads is 0 V and that there is no chance that the cable leads might become active during installation.

Copyright © 2019, Juniper Networks, Inc.

3. Verify that a licensed electrician has attached appropriate cable lugs to the DC power cables. See the DC power cable and lug specifications for your router for more information.

4. Switch the power switch on the power supply faceplate to the standby position.

5. Remove the clear plastic cover protecting the terminal studs on the faceplate.

6. Remove the nut and washer from each power terminal stud to be connected. If no washers and nuts are already installed, they should be in the accessory box.

7. Remove the captive screws on all three cable restraints on the right edge of the power supply faceplate (using a Phillips (+) screwdriver, number 2).

8. Route the negative (–) DC source power cables for **INPUT 0**, **INPUT 1**, **INPUT 3**, and **INPUT 4**, over the smallest cable restraint on the far right. The cable restraint is marked as follows top to bottom: **INPUT 0**, **INPUT 1**, **INPUT 3**, and **INPUT 4**,

   NOTE: **You must route the cables in the locations as marked to be able to replace the clear plastic cover over the terminal studs.**

   Attach the negative (–) DC source power cable lugs to the –48V (input) terminals on the right: **INPUT 0**, **INPUT 1**, **INPUT 3**, and **INPUT 4**. Secure the cable lugs to the terminal studs, first with the washers, then with the nuts. Using a 7/16-in. (11 mm) nut driver, tighten the nuts. Apply between 23 lb-in. (2.6 Nm) and 25 lb-in. (2.8 Nm) of torque to each nut.

Figure 105: Connecting DC Power Cables

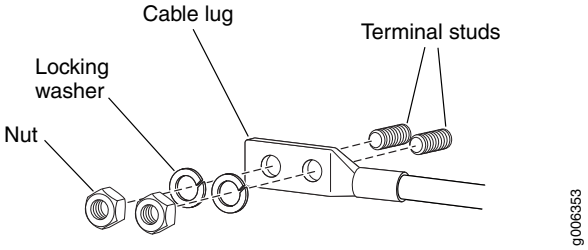

Figure 106: Connecting Negative (–) DC Power Cables to INPUT 0, INPUT 1, INPUT 3, and INPUT 4

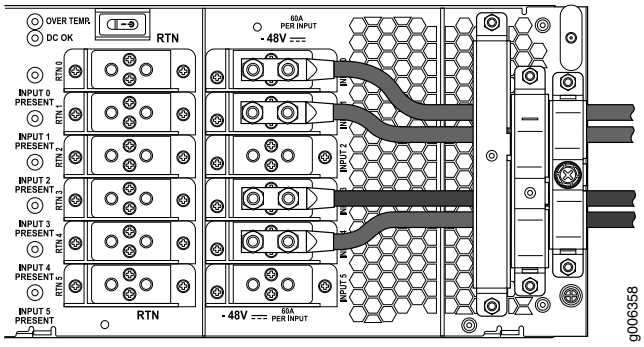

9. Replace the smallest cable restraint on the far right, and tighten the captive screw to hold the power cables for **INPUT 0**, **INPUT 1**, **INPUT 3**, and **INPUT 4** in place.

10. Route the negative (–) DC source power cables for **INPUT 2**, through the middle cable restraint. The middle cable restraint is marked as follows from top to bottom: **INPUT 2**, **RTN 2**, **RTN 5**, and **INPUT 5**.

    NOTE: **You must route the cable in the location as marked to be able to replace the clear plastic cover over the terminal studs.**

    Attach the negative (–) DC source power cable lugs to the **INPUT 2** –48 V (input) terminal on the right. Secure the cable lug to the terminal studs, first with the washer, then with the nut. Using a 7/16-in. (11 mm) nut driver, tighten the nut. Apply between 23 lb-in. (2.6 Nm) and 25 lb-in. (2.8 Nm) of torque to each nut.

Figure 107: Connecting Negative (–) DC Power Cable to INPUT 2

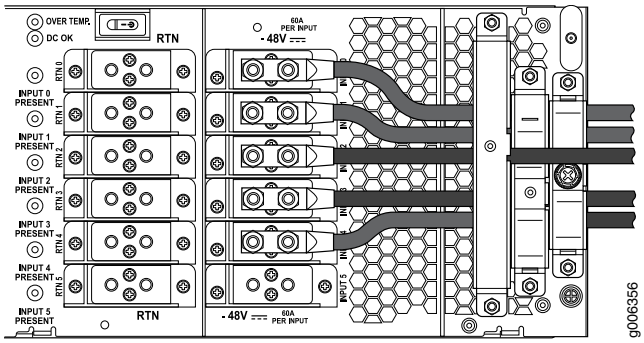

11. Route the positive (+) DC source power cables for **RTN 2** over the middle cable restraint. The middle cable restraint is marked as follows from top to bottom: **INPUT 2**, **RTN 2**, **RTN 5**, and **INPUT 5**,

Copyright © 2019, Juniper Networks, Inc.

NOTE: You must route the cables as marked to be able to replace the clear plastic cover over the terminal studs.

Attach the positive (+) DC source power cable lug to the **RTN 2** (return) terminal on the left. Secure the cable lug to the terminal stud, first with the washer, then with the nut. Using a 7/16-in. (11 mm) nut driver, tighten the nuts. Apply between 23 lb-in. (2.6 Nm) and 25 lb-in. (2.8 Nm) of torque to the nut.

12. Replace the middle cable restraint, and tighten the captive screw to hold the power cables for **INPUT 2** and **RTN 2** in place.

13. Route the positive (+) DC source power cables for **RTN 0**, **RTN 1**, **RTN 3**, and **RTN 4** over the largest cable restraint on the left. The left cable restraint is marked as follows from top to bottom **RTN 0**, **RTN 1**, **RTN 3**, and **RTN 4**,

    NOTE: You must route the cables as marked to be able to replace the clear plastic cover over the terminal studs.

    Attach the positive (+) DC source power cable lugs to the RTN terminals on the left: **RTN 0**, **RTN 1**, **RTN 3**, and **RTN 4**. Secure the cable lugs to the terminal studs, first with the washers, then with the nuts. Using a 7/16-in. (11 mm) nut driver, tighten the nuts. Apply between 23 lb-in. (2.6 Nm) and 25 lb-in. (2.8 Nm) of torque to each nut.

14. Replace the left cable restraint, and tighten the captive screw to hold the power cables for **RTN 0**, **RTN 1**, **RTN 3**, and **RTN 4** in place.

Figure 108: Connecting Positive (+) DC Power Cable to RTN 2, RTN 0, RTN 1, RTN 3, RTN 4

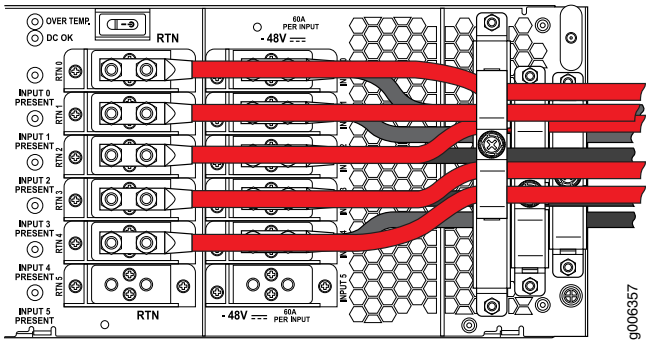

15. Verify that the power cabling is correct, that the power cables are not touching or blocking access to router components, and that they do not drape where people could trip on them.

16. Replace the clear plastic cover over the terminal studs on the faceplate.

Related Documentation

- Tools and Parts Required to Provide Power to the T640 Router on page 227
- Connecting DC Power to the T640 Router (Four 60-A Inputs to Six-Input DC Power Supplies) on page 244
- Connecting DC Power to the T640 Router (Six 60-A Inputs to Six-Input DC Power Supplies) on page 235
- *Powering On the T640 Router*
- Configuring DC Power on a T640 Router on page 263
- Troubleshooting the T640 Power System on page 498
- T640 DC Power System Requirements on page 136
- T640 General Electrical Safety Guidelines and Electrical Codes on page 551
- T640 DC Power Cable and Lug Specifications on page 140
- Site Electrical Wiring Guidelines for Juniper Networks Devices on page 560

Connecting DC Power to the T640 Router (Four 60-A Inputs to Six-Input DC Power Supplies)

You connect DC power to the router by attaching power cables from the DC power sources to the terminal studs on the power supply faceplates. You must provide power cables (the cable lugs are supplied with the router).

CAUTION: Do not use a terminal jumper for 60-A DC power cables. Using a terminal jumper is not supported for this procedure. Doing so will cause a short across the inputs and trip your external circuit breaker.

CAUTION: All connected inputs on the DC power supply in slot PEM0 must be powered by dedicated power feeds derived from feed A, and all connected inputs on the DC power supply in slot PEM1 must be powered by dedicated power feeds derived from feed B. This configuration provides the commonly deployed A/B feed redundancy for the system.

CAUTION: You must use an appropriate torque-controlled tool to tighten the nuts. Applying excessive torque damages the terminal studs and the power supply. The absolute maximum torque that may be applied to this nut is 45 lb-in. (5.0 Nm).

CAUTION: You must ensure that power connections maintain the proper polarity. The power source cables might be labeled (+) and (–) to indicate their polarity. There is no standard color coding for DC power cables. The

Copyright © 2019, Juniper Networks, Inc.

color coding used by the external DC power source at your site determines the color coding for the leads on the power cables that attach to the terminal studs on each power supply.

NOTE: Both DC power supplies (PEM 0 and PEM 1) must be cabled and configured exactly the same. The DC power cables must be connected to the same input terminals on each power supply.

To connect four 60-A DC source power cables to the router, follow this procedure for each DC power supply:

1. Switch off the customer site circuit breakers. Ensure that the voltage across the DC power source cable leads is 0 V and that there is no chance that the cable leads might become active during installation.

2. Verify that a licensed electrician has attached the cable lugs provided with the router to the power cables. See the DC power cable and lug specifications for your router for more information.

3. Switch the power switch on the power supply faceplate to the standby position.

4. Remove the clear plastic cover protecting the terminal studs on the faceplate.

5. Remove the nut and washer from each power terminal stud to be connected (**INPUT 0**, **INPUT 1**, **INPUT 3**, **INPUT 4**, and **RTN 0**, **RTN 1**, **RTN 3**, and **RTN 4**). If no washers and nuts are already installed, they should be in the accessory box.

6. Remove the captive screws on the smallest cable restraint on the right edge of the power supply faceplate, and the largest cable restraint to the left (using a Phillips (+) screwdriver, number 2).

7. Route the negative (–) DC source power cables for **INPUT 0**, **INPUT 1**, **INPUT 3**, and **INPUT 4**, over the smallest cable restraint on the far right. The cable restraint is marked as follows top to bottom: **INPUT 0**, **INPUT 1**, **INPUT 3**, and **INPUT 4**.

   NOTE: You must route the cables in the locations as marked to be able to replace the clear plastic cover over the terminal studs.

   Attach the negative (–) DC source power cable lugs to the –48V (input) terminals on the right: **INPUT 0**, **INPUT 1**, **INPUT 3**, and **INPUT 4** . Secure the cable lugs to the terminal studs, first with the washers, then with the nuts. Using a 7/16-in. (11 mm) nut driver, tighten the nuts. Apply between 23 lb-in. (2.6 Nm) and 25 lb-in. (2.8 Nm) of torque to each nut.

Figure 109: Connecting DC Power Cables

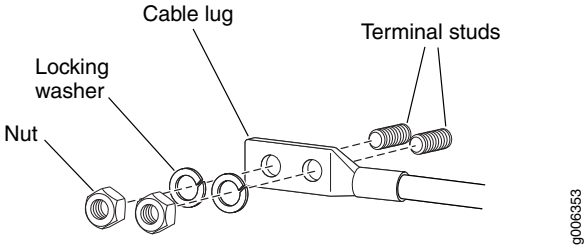

Figure 110: Connecting Negative (–) DC Power Cables to INPUT 0, INPUT 1, INPUT 3, and INPUT 4

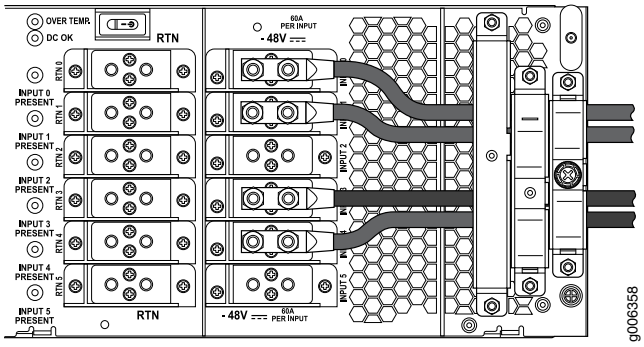

8. Replace the smallest cable restraint on the far right, and tighten the captive screw to hold the power cables for **INPUT 0**, **INPUT 1**, **INPUT 3**, and **INPUT 4** in place.

9. Route the positive (+) DC source power cables for **RTN 0**, **RTN 1**, **RTN 3**, and **RTN 4** over the largest cable restraint on the left. The left cable restraint is marked as follows from top to bottom **RTN 0**, **RTN 1**, **RTN 3**, and **RTN 4**.

   NOTE: **You must route the cables as marked to be able to replace the clear plastic cover over the terminal studs.**

   Attach the negative (–) DC source power cable lugs to the RTN terminals on the left: **RTN 0**, **RTN 1**, **RTN 3**, and **RTN 4**. Secure the cable lugs to the terminal studs, first with the washers, then with the nuts. Using a 7/16-in. (11 mm) nut driver, tighten the nuts. Apply between 23 lb-in. (2.6 Nm) and 25 lb-in. (2.8 Nm) of torque to each nut.

10. Replace the left cable restraint, and tighten the captive screw to hold the power cables for **RTN 0**, **RTN 1**, **RTN 3**, and **RTN 4** in place.

Copyright © 2019, Juniper Networks, Inc.

Figure 111: Connecting Positive (+) DC Power Cables to RTN 0, RTN 1, RTN 3, and RTN 4

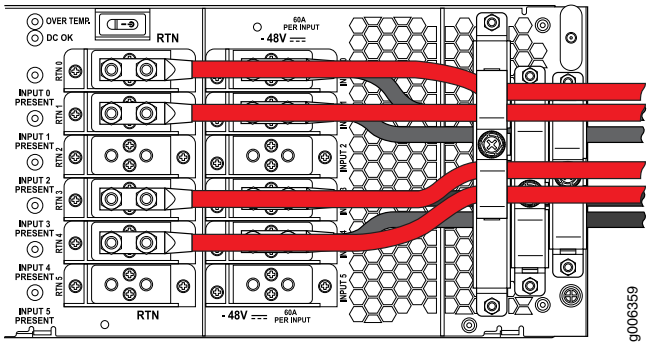

11. Verify that the power cabling is correct, that the power cables are not touching or blocking access to router components, and that they do not drape where people could trip on them.

12. Replace the clear plastic cover over the terminal studs on the faceplate.

Related Documentation

- Tools and Parts Required to Provide Power to the T640 Router on page 227
- Connecting DC Power to the T640 Router (Five 60-A Inputs to Six-Input DC Power Supplies) on page 239
- Connecting DC Power to the T640 Router (Six 60-A Inputs to Six-Input DC Power Supplies) on page 235
- *Powering On the T640 Router*
- Configuring DC Power on a T640 Router on page 263
- Troubleshooting the T640 Power System on page 498
- T640 DC Power Cable and Lug Specifications on page 140
- T640 General Electrical Safety Guidelines and Electrical Codes on page 551
- Site Electrical Wiring Guidelines for Juniper Networks Devices on page 560

Powering On a DC-Powered T640 Router

To power on a DC-powered router:

1. Verify that the power supply is fully inserted in the chassis and that the captive screws on their faceplates are tightened.

2. Verify that the source power cables are connected to the appropriate terminal: the positive (+) source cable to the return terminal (labeled **RTN**) and the negative (–) source cable to the input terminal (labeled **–48V**).

3. Verify that an external management device is connected to one of the Routing Engine ports on the CIP (**AUXILIARY**, **CONSOLE**, or **ETHERNET**). For more information about connecting management devices, see "Overview of Connecting the T640 Router to External Devices" on page 217.

4. Turn on the power to the external management device.

5. Switch on the customer site circuit breakers to provide voltage to the DC power source cables.

6. For a three-input 240-A DC power supply in **2–INPUT** mode, four-input 240-A DC, or six-input DC power supply, verify that the **INPUT PRESENT** LEDs on the power supply faceplate are lit steadily, indicating that the inputs are receiving power.

7. Attach an electrostatic discharge (ESD) grounding strap to your bare wrist, and connect the strap to one of the ESD points on the chassis.

8. Switch the circuit breakers on the two-input 160-A, three-input 240-A, or four-input 240-A DC power supply faceplate to the on position (**|**), or the power switch on the AC power supplies or six-input DC power supplies to the on position.

   NOTE: **After a power supply is powered on, it can take up to 60 seconds for status indicators—such as the LEDs on the power supply, the command output displays, and messages on the LED display on the craft interface—to indicate that the power supply is functioning normally. Ignore error indicators that appear during the first 60 seconds.**

9. For the two-input 160-A, three-input 240-A, or four-input 240-A power supplies, verify that the **CB ON** LEDs on the power supply faceplate are lit steadily. The **CB ON** LEDs blink momentarily, then light steadily to indicate that the circuit breakers are on.

10. Verify that the **DC OK** LED on the power supply faceplate is lit steadily, indicating that the power supply is correctly installed and is functioning properly.

    NOTE: **If any of the output status LEDs do not light steadily, repeat the installation and cabling procedures.**

11. On the external management device connected to the Routing Engine, monitor the startup process to verify that the system has booted properly.

Copyright © 2019, Juniper Networks, Inc.

NOTE: The Routing Engine boots as the power supply completes its startup sequence. If the Routing Engine finishes booting and you need to power off the system, see "Powering Off the T640 Router" on page 256.

Related Documentation

- Setting the Input Mode Switch on a Three-Input 240-A DC Power Supply for a T640 Router on page 374
- Powering Off the T640 Router on page 256
- T640 Preventing Electrostatic Discharge Damage on page 528
- T640 General Electrical Safety Guidelines and Electrical Codes on page 551
- Site Electrical Wiring Guidelines for Juniper Networks Devices on page 560

Connecting AC Power to a T640 Router with Three-Phase Delta AC Power Supplies

You connect AC power to the router with three-phase delta AC power supplies by connecting the AC power cord from an AC power supply to an AC power source.

To connect an AC power cord to an AC power source:

1. Attach an electrostatic discharge (ESD) grounding strap to your bare wrist, and connect the strap to an approved site ESD grounding point. See the instructions for your site.
2. Switch off the customer site circuit breakers. Ensure that the voltage across the AC power source is 0 V and that there is no chance that the voltage might become active during installation.
3. Detach the ESD grounding strap from the approved site ESD grounding point, and connect the strap to one of the ESD points on the chassis.
4. Switch the power switch on the power supply faceplate to the standby position.
5. Using a number 2 Phillips (+) screwdriver, unscrew the two captive screws located on the right side of the metal AC wiring compartment.
6. Open the metal door of the metal AC wiring compartment.
7. Unscrew the retaining nut from the AC power cord.
8. Place the retaining nut inside the metal wiring compartment.
9. Put the wires of the AC power cord through the hole of the metal wiring compartment.

Copyright © 2019, Juniper Networks, Inc.

10. Screw the retaining nut onto the AC power cord to secure it to the metal wiring compartment.

Copyright © 2019, Juniper Networks, Inc.

11. Connect the wires to the AC terminal block on the three-phase delta AC power supply (Figure 112 on page 251). Loosen the input terminal or grounding point screw, insert each wire into the grounding point or input terminal, and tighten the screw.

NOTE: The terminal connections have either slotted screws or hex screws. Use a 1/4-in. slotted screwdriver for the slotted screws. Use a 5/32-in (4-mm) Allen wrench for the 5/16-in hex screws.

a. Insert the wire labeled **GND** into the grounding point labeled **GND**.

b. Insert the wire labeled **L1** into the **L1** input terminal.

c. Insert the wire labeled **L2** into the **L2** input terminal.

d. Insert the wire labeled **L3** into the **L3** input terminal.

Figure 112: Connecting Power to a Three-Phase Delta AC Power Supply

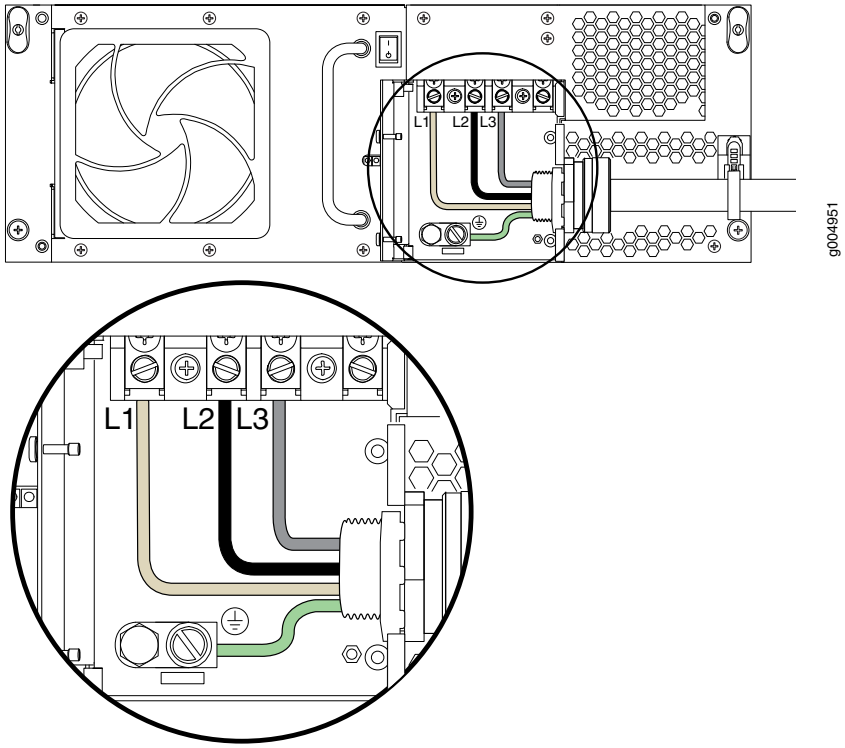

NOTE: The color of each AC power wire might vary.

12. Verify that the power cable connections are correct.

13. Using a number 2 Phillips (+) screwdriver, tighten the two captive screws on the metal AC wiring compartment.

14. Use the provided plastic cable tie to fasten the AC power cord to the power supply.

15. Verify that the AC power cord is not touching or blocking access to router components, and that it does not drape where people could trip on it.

16. Repeat the procedure for the other three-phase delta AC power supply.

Related Documentation

- T640 Three-Phase Delta and Wye AC Power Supply Description on page 114
- Powering On an AC-Powered T640 Router on page 254
- T640 AC Power Electrical Safety Guidelines on page 559
- T640 AC Power Cord Specifications on page 147
- T640 Preventing Electrostatic Discharge Damage on page 528

Connecting AC Power to a T640 Router with Three-Phase Wye AC Power Supplies

To connect an AC power cord:

1. Attach an electrostatic discharge (ESD) grounding strap to your bare wrist, and connect the strap to an approved site ESD grounding point. See the instructions for your site.

2. Switch off the customer site circuit breakers. Ensure that the voltage across the AC power source is 0 V and that there is no chance that the voltage might become active during installation.

3. Detach the ESD grounding strap from the approved site ESD grounding point, and connect the strap to one of the ESD points on the chassis.

4. Switch the power switch on the power supply faceplate to the standby position.

5. Using a number 2 Phillips (+) screwdriver, loosen the two captive screws on the metal AC wiring compartment.

6. Open the metal door of the metal AC wiring compartment.

7. Unscrew the retaining nut from the AC power cord.

8. Place the retaining nut inside the metal wiring compartment.

9. Put the wires of the AC power cord through the hole of the metal wiring compartment.

Copyright © 2019, Juniper Networks, Inc.

10. Screw the retaining nut onto the AC power cord to secure it to the metal wiring compartment.

11. Connect the wires to the AC terminal block on the three-phase wye AC power supply (Figure 113 on page 253). Loosen each of the input terminals or grounding point screws, insert each wire into the grounding point or input terminal, and tighten the screw.

    NOTE: The terminal connections have either slotted screws or hex screws. Use a 1/4-in. slotted screwdriver for the slotted screws. Use a 5/32-in (4-mm) Allen wrench for the 5/16-in hex screws.

    a. Insert the wire labeled **GND** into the grounding point labeled **GND**.

    b. Insert the wire labeled **L1** into the **L1** input terminal.

    c. Insert the wire labeled **L2** into the **L2** input terminal.

    d. Insert the wire labeled **L3** into the **L3** input terminal.

    e. Insert the wire labeled **N** into the **N** input terminal

Figure 113: Connecting Power to the Three-Phase Wye AC Power Supply

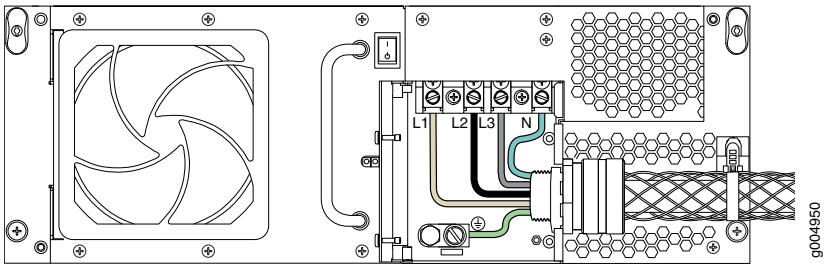

12. Verify that the power cable connections are correct.

13. Using a number 2 Phillips (+) screwdriver, tighten the two captive screws on the metal AC wiring compartment.

14. Use the provided plastic cable tie to fasten the AC power cord to the power supply.

Figure 114: Fastening the AC Power Cord to the Power Supply

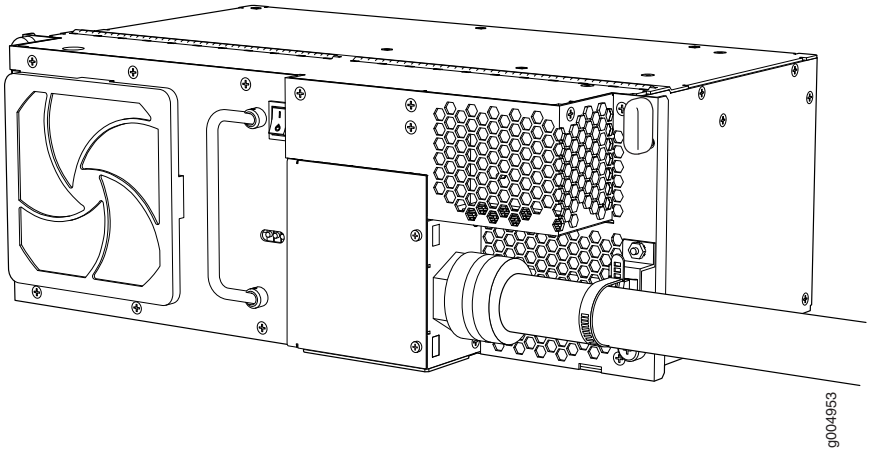

15. Verify that the AC power cord is not touching or blocking access to router components, and that it does not drape where people could trip on it.

16. Repeat the procedure for the other three-phase wye AC power supply.

Related Documentation

- T640 Three-Phase Delta and Wye AC Power Supply Description on page 114
- Powering On an AC-Powered T640 Router on page 254
- T640 AC Power Electrical Safety Guidelines on page 559
- T640 AC Power Cord Specifications on page 147
- T640 Preventing Electrostatic Discharge Damage on page 528

Powering On an AC-Powered T640 Router

You can use this procedure for a router with either three-phase delta AC power supplies or three-phase wye AC power supplies. To power on the AC-powered router:

1. Verify that the power supplies are fully inserted in the chassis and that the captive screws on their faceplates are tightened.

2. Verify that the AC power cords are connected correctly.

3. Verify that an external management device is connected to one of the Routing Engine ports on the CIP (**AUXILIARY** or **CONSOLE**).

NOTE: **The management Ethernet port will not be functional until you have completed the initial configuration.**

Copyright © 2019, Juniper Networks, Inc.

4. Turn on the power to the external management device.

5. Switch on the dedicated customer site circuit breakers to provide power to the AC power cables. Follow your site's procedures.

6. Verify that the **AC OK** LED on both AC power supply faceplates are lit steadily green, indicating that the power supplies are receiving power.

7. Attach an electrostatic discharge (ESD) grounding strap to your bare wrist, and connect the strap to one of the ESD points on the chassis.

8. Switch the power switch on one of the power supplies to the **ON** position (**|**). The **DC OK** LED blinks momentarily, then lights steadily.

   NOTE: After a power supply is powered on, it can take up to 60 seconds for status indicators—such as the output status LEDs on the power supply, the command output, and messages on the LCD on the craft interface—to indicate that the power supply is functioning normally. Ignore error indicators that appear during the first 60 seconds.

9. Verify that the **DC OK** LED on the AC power supply faceplate is lit steadily, indicating that power supply is correctly installed, functioning properly, and providing power to the DC outputs.

10. On the external management device connected to the Routing Engine, monitor the startup process to verify that the system has booted properly.

    NOTE: If the system is completely powered off when you power on the power supply, the Routing Engine boots as the power supply completes its startup sequence. If the Routing Engine finishes booting, you must power off the router before powering it on again. After powering on a power supply, wait at least 60 seconds before turning it off. After powering off a power supply, wait at least 60 seconds before turning it back on.

Related Documentation

- T640 Three-Phase Delta and Wye AC Power Supply Description on page 114
- Connecting AC Power to a T640 Router with Three-Phase Delta AC Power Supplies on page 249
- Connecting AC Power to a T640 Router with Three-Phase Wye AC Power Supplies on page 252
- Powering Off the T640 Router on page 256

Copyright © 2019, Juniper Networks, Inc.

- T640 Preventing Electrostatic Discharge Damage on page 528
- T640 General Electrical Safety Guidelines and Electrical Codes on page 551
- T640 AC Power Electrical Safety Guidelines on page 559
- T640 Preventing Electrostatic Discharge Damage on page 528

Powering Off the T640 Router

To power off a T640 router:

1. On the external management device connected to the Routing Engine, issue the **request system halt** operational mode command. The command shuts down both Routing Engines cleanly, so their state information is preserved. (If the router contains only one Routing Engine, issue the **request system halt** command.)

   `user@host>` **request system halt both-routing-engines**

   For more information about these commands, see *request system halt*.

2. Wait until a message appears on the console confirming that the operating system has halted.

   ```
   Halt the system ? [yes,no] (no) yes

   *** FINAL System shutdown message from root@section2 ***

   System going down IMMEDIATELY

   Terminated

   ...

   syncing disks... 11 8 done

   The operating system has halted.

   Please press any key to reboot.
   ```

3. Attach an electrostatic discharge (ESD) grounding strap to your bare wrist, and connect the strap to one of the ESD points on the chassis.

4. Switch the circuit breakers on each two-input 160-A DC power supply, three-input 240-A DC power supply, or four-input 240-A DC power supply faceplate to the off position (**O**) or switch the power switch on each AC power supply or six-input DC power supply faceplate to the standby position.

Related Documentation

- T640 Preventing Electrostatic Discharge Damage on page 528
- Powering On a DC-Powered T640 Router on page 247

Copyright © 2019, Juniper Networks, Inc.

- Powering On an AC-Powered T640 Router on page 254
- T640 General Electrical Safety Guidelines and Electrical Codes on page 551

Copyright © 2019, Juniper Networks, Inc.

CHAPTER 23

Configuring the Junos OS Software

- Preparing to Configure the T640 Router on page 259
- Initially Configuring the T640 Router on page 259
- Configuring DC Power on a T640 Router on page 263

Preparing to Configure the T640 Router

Gather the following information before configuring the router:

- Name the router will use on the network
- Domain name the router will use
- IP address and prefix length information for the Ethernet interface
- IP address of a default router
- IP address of a DNS server
- Password for the root user

Related Documentation

- Initially Configuring the T640 Router on page 259

Initially Configuring the T640 Router

The T640 Core Router is shipped with the Junos OS preinstalled and ready to be configured when the T640 router is powered on. These procedures connect a router to the network but do not enable it to forward traffic. For complete information about enabling the router to forward traffic, including examples, see the Junos OS configuration guides.

You configure the router by issuing Junos OS command-line interface (CLI) commands, either on a console device attached to the **CONSOLE** port on the CIP, or over a telnet connection to a network connected to the **ETHERNET** port on the CIP.

NOTE: These procedures enable you to use the ETHERNET management port. For the initial configuration, use a device attached to the CONSOLE port on the CIP.

1. Entering Configuration Mode on page 260
2. Configuring User Accounts and Passwords on page 260
3. Configuring System Attributes on page 261
4. Committing the Configuration on page 262

Entering Configuration Mode

1. Verify that the network device is powered on.

2. Log in as the root user. There is no password.

```
Amnesiac <ttyd0>
login: root
```

3. Start the CLI.

```
root@% cli
root>
```

4. Enter configuration mode.

```
root> configure
Entering configuration mode.
[edit]
root#
```

Configuring User Accounts and Passwords

For information about using an encrypted password or an SSH public key string (DSA or RSA), see *Configuring the Root Password* and *authentication (Login)*.

1. Add a password to the root administration user account. Enter a cleartext password.

```
[edit]
root@host# set system root-authentication plain-text-password
New password: password
Retype new password: password
```

2. Create a management console user account.

```
[edit]
root@host# set system login user user-name authentication plain-text-password
```

 Copyright © 2019, Juniper Networks, Inc.

New Password: ***password***
Retype new password: ***password***

3. Set the user account class to **super-user**.

   [edit]
   root@host# **set system login user** ***user-name*** **class super-user**

Configuring System Attributes

For more information on configuring the backup routing and static routes, see the *Junos OS Administration Library*.

1. Configure the name of the router. If the name includes spaces, enclose the name in quotation marks (“ ”).

   [edit]
   root@host# **set system host-name** ***host-name***

   NOTE: The DNS server does not use the hostname to resolve to the correct IP address. This hostname is used to display the name of the routing engine in the CLI. For example, this hostname shows on the command-line prompt when the user is logged on to the CLI:

   ```
   user-name@host-name>
   ```

2. Configure the IP address of the DNS server.

   ```
   [edit]
   root# set system name-server address
   ```

3. Configure the router’s domain name.

   [edit]
   root@# **set system domain-name** ***domain-name***

4. Configure the IP address and prefix length for the router’s management Ethernet interface.

   NOTE: The RE-C1800 Routing Engine (RE-DUO-1800) does not support the fxp0 interface or the fxp1 and fxp2 internal Ethernet interfaces. Use the em0 interface for the RE-C1800 Routing Engine, and fxp0 interface for all other Routing Engines supported for the router.

```
[edit]
root@# set interfaces fxp0 unit 0 family inet address address/prefix-length

[edit]
root@# set interfaces em0 unit 0 family inet address address/prefix-length
```

5. Configure the IP address of a backup routing engine. The backup routing engine is used while the local router is booting and if the routing process fails to start. After the routing process starts, the backup routing engine address is removed from the local routing and forwarding tables.

```
[edit]
root# set system backup-router address
```

6. (Optional) Configure the static routes to remote subnets with access to the management port. Access to the management port is limited to the local subnet. To access the management port from a remote subnet, you must add a static route to that subnet within the routing table.

```
[edit]
root# set routing-options static route remote-subnet next-hop destination-IP
 retain no-readvertise
```

7. Configure the telnet service at the **[edit system services]** hierarchy level.

```
[edit]
set system services telnet
```

Committing the Configuration

1. Display the configuration to verify that it is correct.

```
[edit]
root@# show
system {
  host-name host-name;
  domain-name domain-name;
  backup-router address;
  root-authentication {
    authentication-method (password | public-key);
  }
  name-server {
    address;
  }
}
interfaces {
  fxp0 {
    unit 0 {
      family inet {
        address address/prefix-length;
```

 Copyright © 2019, Juniper Networks, Inc.

```
            }
          }
        }
      }
```

2. Commit the configuration to activate it on the router.

   ```
   [edit]
   root@# commit
   ```

3. Optionally, configure additional properties by adding the necessary configuration statements. Then commit the changes to activate them on the router.

   ```
   [edit]
   root@host# commit
   ```

4. When you have finished configuring the router, exit configuration mode.

   ```
   [edit]
   root@host# exit
   root@host>
   ```

Related Documentation

- T640 Router Description on page 3
- Powering On a DC-Powered T640 Router on page 247
- Preparing to Configure the T640 Router on page 259

Configuring DC Power on a T640 Router

After you have connected the DC power and initially configured the router, you need to configure the number of input feeds if you connected fewer than six cables to the six-input DC power supply.

For more information about configuring the DC power supply and the commands used in the procedures, see the *Junos OS Administration Library*.

- Configuring DC Power on a T640 Router (Five 60-A Cables on a Six-Input DC Power Supply) on page 264
- Configuring DC Power on a T640 (Four 60-A Cables on a Six-Input DC Power Supply) on page 264

Configuring DC Power on a T640 Router (Five 60-A Cables on a Six-Input DC Power Supply)

When you connect five cables on a six-input DC power supply, you must specify the number of input feeds connected in the software. If the number of physical input feeds receiving power does not match the number of configured input feeds, the router displays an alarm message.

1. Configure the number of input feeds to indicate that five DC power cables are connected.

```
[edit]
user@host# set chassis pem feeds 5
```

NOTE: The default number of input feeds is 6.

2. (Optional) Use the **show** statement to display the configuration to verify that it is correct.

```
[edit]
user@host# show
pem {
   feeds 5;
}
```

3. Commit the configuration to activate it on the router, and exit configuration mode.

```
[edit]
user@host# commit
user@host# exit
user@host>
```

Configuring DC Power on a T640 (Four 60-A Cables on a Six-Input DC Power Supply)

When you connect four cables on a six-input DC power supply, you must specify the number of input feeds connected in the software. If the number of physical input feeds receiving power does not match the number of configured input feeds, the router displays an alarm message.

1. Configure the number of input feeds to indicate that four DC power cables are connected.

```
[edit]
user@host# set chassis pem feeds 4
```

NOTE: The default number of input feeds is 6.

Copyright © 2019, Juniper Networks, Inc.

2. (Optional) If the power has been underprovisioned for your configuration, some FPCs might not be brought online if the available power capacity is exceeded. When you reboot the router, FPCs are brought online based on the default setting of the **fru-poweron-sequence** command. You can use the **fru-poweron-sequence** command to change the default order in which FPCs are brought online when the router is rebooted. The default sequence is the numerical order of the FPC slots (0 through 7).

   ```
   [edit]
   user@host# set chassis fru-poweron-sequence fru-poweron-sequence
   ```

3. (Optional) Use the **show** statement to display the configuration to verify that it is correct.

   ```
   [edit]
   user@host# show
   pem {
      feeds 4;
   }
   ```

4. Commit the configuration to activate it on the router, and exit configuration mode.

   ```
   [edit]
   user@host# commit
   user@host# exit
   user@host>
   ```

Related Documentation

- T640 Power System Description on page 103
- Connecting DC Power to the T640 Router (Four 60-A Inputs to Six-Input DC Power Supplies) on page 244
- Connecting DC Power to the T640 Router (Five 60-A Inputs to Six-Input DC Power Supplies) on page 239
- Troubleshooting the T640 Power System on page 498
- T640 DC Power System Requirements on page 136

Copyright © 2019, Juniper Networks, Inc.

Copyright © 2019, Juniper Networks, Inc.

PART 4

Installing and Replacing Components

- Overview of Installing and Replacing Components on page 269
- Replacing Chassis Components on page 273
- Replacing Cooling System Components on page 289
- Replacing Host Subsystem Components on page 319
- Replacing Line Card Components on page 345
- Replacing Power System Components on page 363
- Replacing Switch Fabric Components on page 439

Copyright © 2019, Juniper Networks, Inc.

Copyright © 2019, Juniper Networks, Inc.

CHAPTER 24

Overview of Installing and Replacing Components

- T640 Field-Replaceable Units on page 269
- Tools and Parts Required to Replace the T640 Hardware Components on page 270

T640 Field-Replaceable Units

Field-replaceable units (FRUs) are router components that can be replaced at the customer site. Replacing most FRUs requires minimal router downtime. The router uses the following types of FRUs:

- Hot-removable and hot-insertable FRUs—You can remove and replace these components without powering off the router or disrupting the routing functions.
- Hot-pluggable FRUs—You can remove and replace these components without powering down the router, but the routing functions of the system are interrupted when the component is removed.

NOTE: Before you replace most host subsystem components, such as a control board or Routing Engine, you must take the host subsystem offline. However, it is not necessary to halt the host subsystem to insert or remove a PC card.

You must power off the Routing Engine before replacing a CompactFlash card or solid-state disk in a Routing Engine.

Table 95 on page 270 lists the FRUs for the router.

Table 95: Field-Replaceable Units

Hot-Removable and Hot-Insertable FRUs	Hot-Pluggable FRUs
Air filters	Connector Interface Panel (CIP)
Craft Interface	Nonredundant control board
Flexible PIC Concentrators (FPCs)	Master control board (if nonstop active routing is not configured)
Front and rear fan trays	Nonredundant Routing Engine
Physical Interface Cards (PICs)	Master Routing Engine (if nonstop active routing is not configured)
Power supplies	Master and nonredundant SCGs
Backup SONET Clock Generators (SCGs)	
Switch Interface Boards (SIBs)	
Master control board (if nonstop active routing is configured)	
Backup control board	
Backup Routing Engine	

Related Documentation

- T640 Router Description on page 3
- Taking the T640 Host Subsystem Offline on page 319

Tools and Parts Required to Replace the T640 Hardware Components

To replace hardware components, you need the tools and parts listed in Table 96 on page 270.

Table 96: Tools and Parts Required for Component Replacement

Components	Tool or Part
All	Electrostatic discharge (ESD) grounding wrist strap
AC power supply	Phillips (+) screwdriver, number 2 1/4-in. slotted screwdriver or 5/32-in. (4 mm) allen wrench NOTE: The terminal connections have either slotted screws or hex screws. Use a 1/4-in. slotted screwdriver for the slotted screws. Use a 5/32-in (4-mm) Allen wrench for the 5/16-in hex screws.

Copyright © 2019, Juniper Networks, Inc.

Table 96: Tools and Parts Required for Component Replacement (continued)

Components	Tool or Part
AC power supply cord	Phillips (+) screwdriver, number 2 1/4-in. slotted screwdriver or 5/32-in. (4 mm) allen wrench NOTE: The terminal connections have either slotted screws or hex screws. Use a 1/4-in. slotted screwdriver for the slotted screws. Use a 5/32-in (4-mm) Allen wrench for the 5/16-in hex screws.
Air filter (front or rear)	Phillips (+) screwdrivers, numbers 1 and 2
CIP	Phillips (+) screwdrivers, numbers 1 and 2
Control board	Phillips (+) screwdrivers, numbers 1 and 2 Electrostatic bag or antistatic mat Blank panel (if component is not reinstalled)
Craft interface	Phillips (+) screwdrivers, numbers 1 and 2
DC power supply	Phillips (+) screwdrivers, numbers 1 and 2 7/16-in. (11 mm) nut driver
DC power supply cable	7/16-in. (11 mm) nut driver
Fan tray (front or rear)	Phillips (+) screwdrivers, numbers 1 and 2
FPC	Phillips (+) screwdrivers, numbers 1 and 2 Blank panel (if component is not reinstalled) Electrostatic bag or antistatic mat
PIC	Phillips (+) screwdrivers, numbers 1 and 2 Rubber safety cap for fiber-optic PICs or fiber-optic PIC cables Flat-blade (−) screwdriver for Type 1 PICs Electrostatic bag or antistatic mat Blank panel (if component is not reinstalled)
Routing Engine	Phillips (+) screwdrivers, numbers 1 and 2 Electrostatic bag or antistatic mat Blank panel (if component is not reinstalled)

Copyright © 2019, Juniper Networks, Inc.

Table 96: Tools and Parts Required for Component Replacement (continued)

Components	Tool or Part
Serial cable to **AUXILIARY** or **CONSOLE** Routing Engine port	Flat-blade (–) screwdriver
Standard SIB or T640-SIB	Phillips (+) screwdrivers, numbers 1 and 2 Electrostatic bag or antistatic mat Blank panel (if component is not reinstalled)
SCG	Phillips (+) screwdrivers, numbers 1 and 2

Related Documentation

- T640 Chassis Description on page 15
- Returning a Hardware Component to Juniper Networks, Inc. on page 515

Copyright © 2019, Juniper Networks, Inc.

CHAPTER 25

Replacing Chassis Components

- Replacing a T640 Craft Interface on page 273
- Replacing the T640 CIP on page 275
- Replacing the T640 Alarm Relay Wires on page 278
- Replacing the T640 Console or Auxiliary Cable on page 281
- Replacing the T640 Management Ethernet Cable on page 283
- Replacing a T640 SCG on page 285

Replacing a T640 Craft Interface

The craft interface is hot-insertable and hot-removable. When you install the craft interface, allow several minutes for the display to reflect the current state of the router. Before you remove the craft interface, remove the front upper fan tray. For instructions on removing a front fan tray, see"Removing the T640 Standard or Quiet Front Fan Trays" on page 194.

1. Removing a T640 Craft Interface on page 273
2. Installing a T640 Craft Interface on page 274

Removing a T640 Craft Interface

The craft interface is located on the front of the chassis above the FPC card cage and weighs approximately 2 lb (0.9 kg). To remove the craft interface (see Figure 115 on page 274):

1. Attach an electrostatic discharge (ESD) grounding strap to your bare wrist, and connect the strap to one of the ESD points on the chassis.

2. Completely loosen the screws at the four corners of the craft interface.

3. Insert the blade of a flat-blade screwdriver into the slot on one side of the craft interface, and then gently pry that side out from the chassis.

4. Insert the blade of a flat-blade screwdriver into the slot on the other side of the craft interface, and then gently pry that side out from the chassis.

5. Grasp the craft interface by the top and bottom edges, and carefully pull it straight out of the chassis.

Figure 115: Removing a Craft Interface

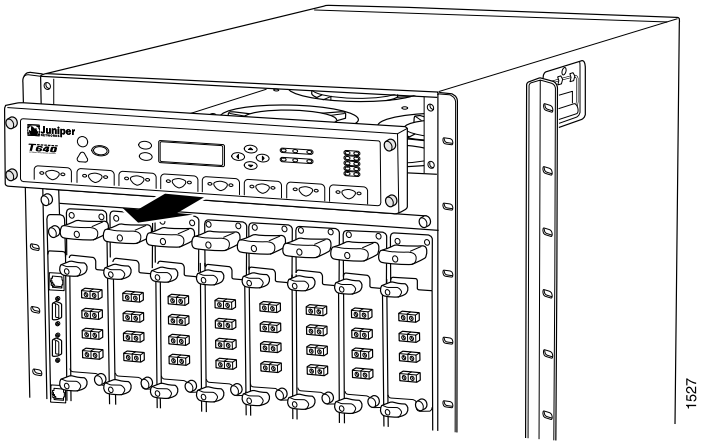

See Also

- T640 Craft Interface Description on page 22
- T640 Craft Interface LCD and Navigation Buttons on page 25
- T640 Preventing Electrostatic Discharge Damage on page 528

Installing a T640 Craft Interface

To install the craft interface (see Figure 116 on page 275):

1. Attach an electrostatic discharge (ESD) grounding strap to your bare wrist, and connect the strap to one of the ESD points on the chassis.

2. Grasping the craft interface by the top and bottom edges, press it into place.

3. Tighten the screws at the corners of the craft interface.

NOTE: **When you install the craft interface in an operating router, allow several minutes for the LEDs on the craft interface to reflect the current state of the router.**

After you install the replacement craft interface, immediately reinstall the upper front fan tray.

Copyright © 2019, Juniper Networks, Inc.

Figure 116: Installing a Replacement Craft Interface

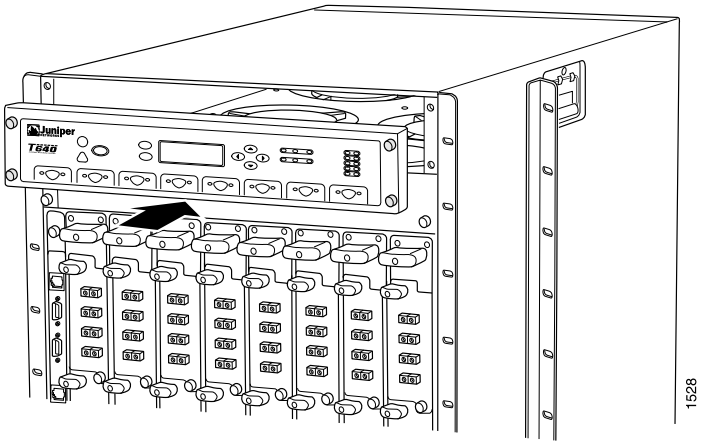

See Also

- T640 Craft Interface Description on page 22
- T640 Craft Interface LCD and Navigation Buttons on page 25
- T640 Preventing Electrostatic Discharge Damage on page 528

Related Documentation

- T640 Craft Interface Description on page 22
- T640 Craft Interface LCD and Navigation Buttons on page 25
- T640 Preventing Electrostatic Discharge Damage on page 528

Replacing the T640 CIP

1. Removing a T640 CIP on page 275
2. Installing a T640 CIP on page 277

Removing a T640 CIP

The CIP is located to the left side of the FPC card cage. It houses the Routing Engine interface ports, which accept connections to external management and alarm-reporting devices.

The CIP is hot-pluggable. It weighs approximately 8 lb (3.6 kg). When the CIP is removed, you cannot control or communicate with the router using an external device.

To remove the CIP (see Figure 117 on page 276):

1. Attach an electrostatic discharge (ESD) grounding strap to your bare wrist, and connect the strap to one of the ESD points on the chassis.

2. Disconnect any external devices connected to the CIP.

3. Loosen the captive screws at the top and bottom of the CIP faceplate.

4. Grasp the handle on the CIP faceplate, and carefully pull the CIP straight out of the chassis.

CAUTION: **Be sure to slide the CIP straight within the slot to avoid damaging the connector pins on the front of the midplane.**

Figure 117: Removing a CIP

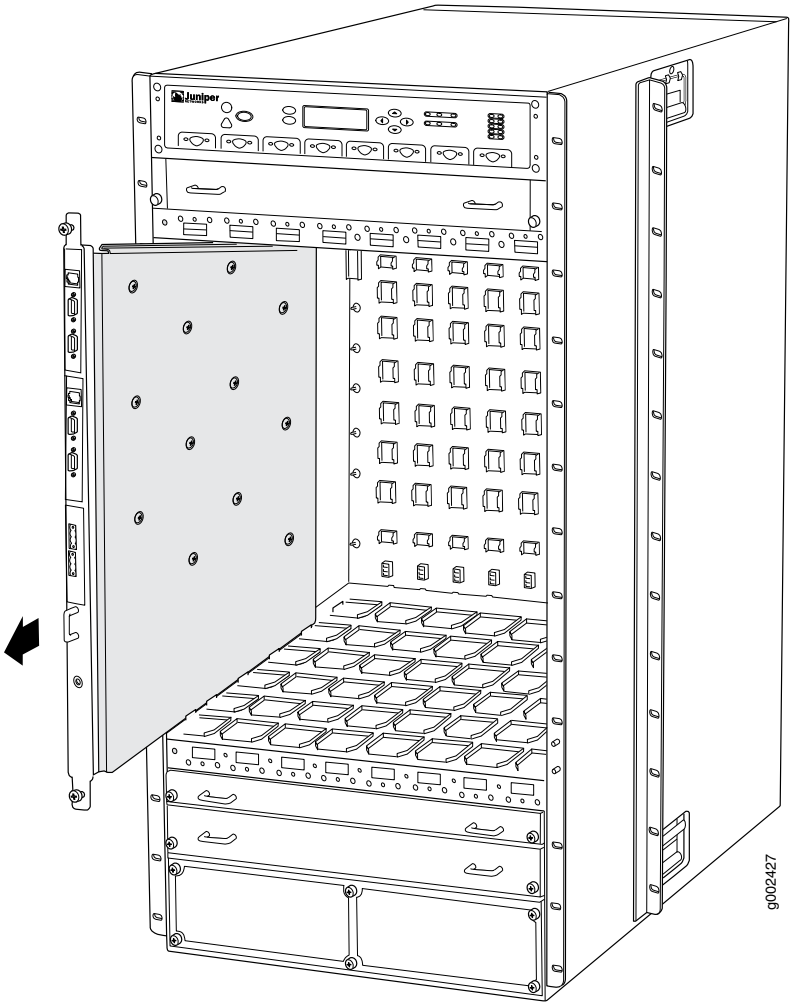

See Also

- T640 Chassis Description on page 15
- T640 Connector Interface Panel (CIP) Description on page 19
- Maintaining the T640 Routing Engines on page 468
- *Replacing the T640 Connections to Routing Engine Interface Ports*

Copyright © 2019, Juniper Networks, Inc.

- T640 Preventing Electrostatic Discharge Damage on page 528

Installing a T640 CIP

To install the CIP (see Figure 118 on page 278):

1. Attach an electrostatic discharge (ESD) grounding strap to your bare wrist, and connect the strap to one of the ESD points on the chassis.

2. Grasp the CIP handle with one hand and hold the bottom edge of the CIP with the other hand to support its weight.

   NOTE: **The components on the CIP are on the left side of the board, unlike the components of an FPC, which are on the right side. Verify that the components are on the left before inserting the CIP.**

3. Insert the CIP into the leftmost slot of the FPC card cage, carefully aligning the top and bottom of the CIP with the guides in the card cage.

4. Carefully push the CIP straight into the chassis until it contacts the midplane.

5. Tighten the screws at the top and bottom of the CIP faceplate.

6. Reattach any external devices connected to the CIP.

   CAUTION: **Be sure to slide the CIP straight within the slot to avoid damaging the connector pins on the front of the midplane.**

7. To verify that the CIP is installed correctly, plug an Ethernet cable into the Ethernet port on the CIP. If the host module is operational, the **ACTIVE** LED blinks to indicate Ethernet activity. If you can run the CLI, the CIP is installed correctly.

Copyright © 2019, Juniper Networks, Inc.

Figure 118: Installing a CIP

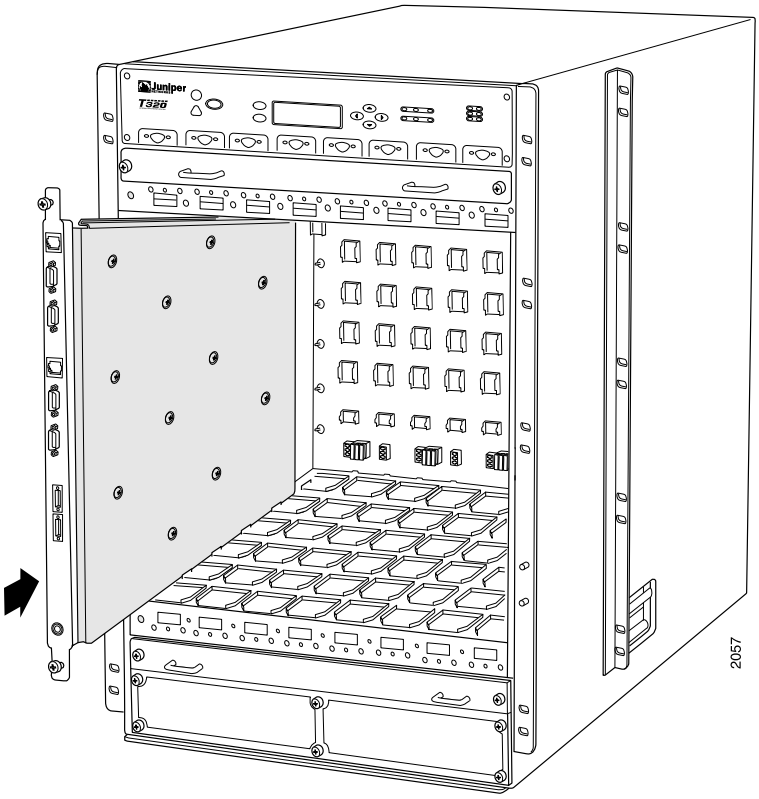

See Also

- T640 Preventing Electrostatic Discharge Damage on page 528
- T640 Connector Interface Panel (CIP) Description on page 19
- Maintaining the T640 Routing Engines on page 468

Related Documentation

- T640 Preventing Electrostatic Discharge Damage on page 528
- T640 Connector Interface Panel (CIP) Description on page 19
- Connecting the T640 Router to a Management Console or Auxiliary Device on page 218
- *Replacing the T640 Connections to Routing Engine Interface Ports*
- T640 Routing Engine Interface Cable and Wire Specifications on page 153

Replacing the T640 Alarm Relay Wires

To connect the router to external alarm-reporting devices, attach wires to the **RED ALARM** and **YELLOW ALARM** relay contacts on the CIP. A system condition that triggers the red or yellow alarm LED on the craft interface also activates the corresponding alarm relay contact.

Copyright © 2019, Juniper Networks, Inc.

The terminal blocks that plug into the alarm relay contacts are supplied with the router. They accept wire of any gauge between 28-AWG and 14-AWG (0.08 and 2.08 mm^2), which is not provided. Use the wire gauge appropriate for the external device you are connecting.

To replace the wires connecting to an alarm-reporting device (see Figure 119 on page 280):

1. Disconnect the existing wire at the external device.

2. Prepare the required length of replacement wire with gauge between 28-AWG and 14-AWG (0.08 and 2.08 mm^2).

3. Using a 2.5-mm flat-blade screwdriver, loosen the small screws on the face of the terminal block, and remove the block from the relay contact.

4. Using the 2.5-mm flat-blade screwdriver, loosen the small screws on the side of the terminal block. Remove existing wires from the slots in the front of the block, and insert replacement wires. Tighten the screws to secure the wire.

5. Plug the terminal block into the relay contact and use a 2.5-mm flat-blade screwdriver to tighten the screws on the face of the block.

6. Attach the other end of the wires to the external device.

Copyright © 2019, Juniper Networks, Inc.

Figure 119: Routing Engine Alarm Relay Wires

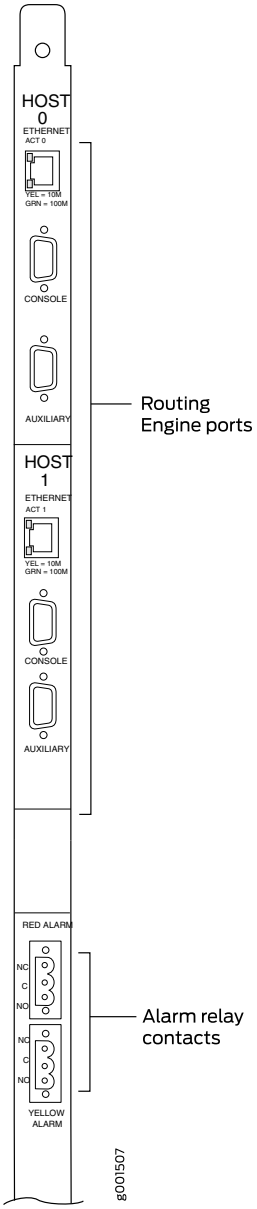

Related Documentation

- T640 Connector Interface Panel (CIP) Description on page 19
- Overview of Connecting the T640 Router to External Devices on page 217

Copyright © 2019, Juniper Networks, Inc.

Replacing the T640 Console or Auxiliary Cable

To use a system console to configure and manage the Routing Engine, connect it to the appropriate **CONSOLE** port on the CIP. To use a laptop, modem, or other auxiliary device, connect it to the appropriate **AUXILIARY** port on the CIP. Both ports accept a cable with an RJ-45 connector. One RJ-45/DB-9 cable is provided with the router. If you want to connect a device to both ports, you must supply another cable.

To connect a management console or auxiliary device:

1. Plug one end of the replacement cable into the appropriate **CONSOLE** or **AUXILIARY** port. Figure 120 on page 282 shows the external device ports on the CIP. The ports labeled **HOST 0** connect to the Routing Engine in the upper Routing Engine slot (**RE0**), and the ports labeled **HOST 1** connect to the Routing Engine in the lower Routing Engine slot (**RE1**).

2. Plug the other end of the cable into the device's serial port.

Figure 120: Routing Engine Console

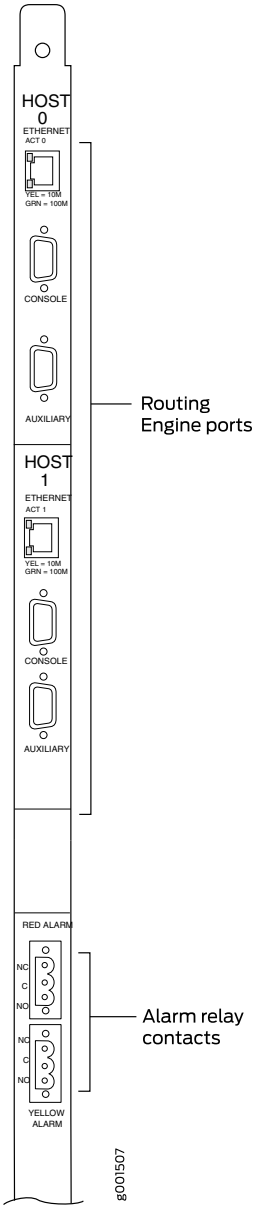

Related Documentation

- Connecting the T640 Router to a Management Console or Auxiliary Device on page 218
- T640 Routing Engine Interface Cable and Wire Specifications on page 153
- T640 DB-9 Connector Pinouts for the Routing Engine AUXILIARY and CONSOLE Ports on page 154

Copyright © 2019, Juniper Networks, Inc.

Replacing the T640 Management Ethernet Cable

To replace the management Ethernet cable:

1. Press the tab on the connector and pull the connector straight out of the **ETHERNET** port. Figure 121 on page 284 shows the connector.

2. Disconnect the cable from the network device.

3. Plug one end of the replacement cable into the appropriate **ETHERNET** port. The ports labeled **HOST 0** connect to the Routing Engine in the upper Routing Engine slot (**RE0**), and the ports labeled **HOST 1** connect to the Routing Engine in the lower Routing Engine slot (**RE1**).

4. Plug the other end of the cable into the network device.

Figure 121: Ethernet Cable Connectors

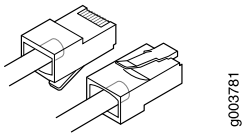

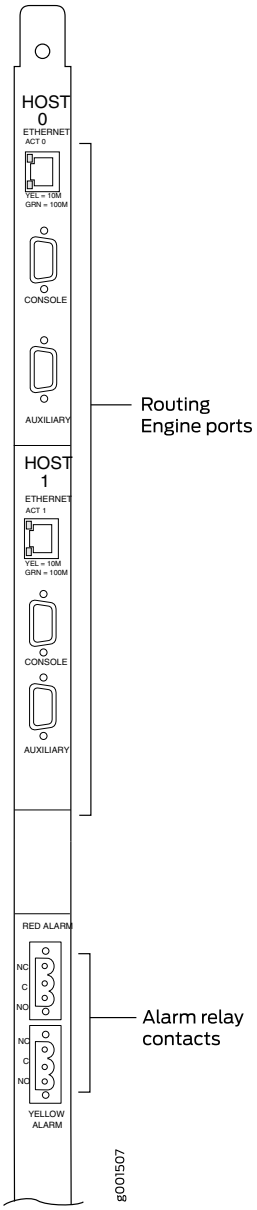

Related Documentation

- T640 Routing Engine Interface Cable and Wire Specifications on page 153
- T640 RJ-45 Connector Pinouts for the Routing Engine ETHERNET Port on page 154

Copyright © 2019, Juniper Networks, Inc.

Replacing a T640 SCG

Backup SCGs are hot-removable and hot-insertable. Master and nonredundant SCGs are hot-pluggable.

To replace an SCG, perform the following procedures:

1. Removing a T640 SCG on page 285
2. Installing a T640 SCG on page 286

Removing a T640 SCG

The router can have one or two SCGs installed. The SCGs are located in the upper rear of the chassis, above the control boards and Routing Engines. Each SCG weighs approximately 1.9 lb (0.9 kg).

If two SCGs are installed and both are functioning normally, **SCG0** is the master and **SCG1** is the backup. Removing the backup SCG does not affect the functioning of the router. Taking the master SCG offline might result in a brief loss of SONET clock lock while the backup SCG becomes the master.

To remove an SCG (see Figure 122 on page 286):

1. Determine if the SCG is functioning as the master:
   - Check the blue **MASTER** LED on the SCG faceplate. If this LED is on steadily, the SCG is functioning as the master.
   - Use the following CLI command to display which SCG is functioning as the master:

     ```
     user@host> show chassis clocks
     ```

2. Place an electrostatic bag or antistatic mat on a flat, stable surface.
3. Attach an electrostatic discharge (ESD) grounding strap to your bare wrist, and connect the strap to one of the ESD points on the chassis.
4. Press the online/offline button on the SCG faceplate and hold it down until the **OK** LED goes out (about 5 seconds).
5. If an external device is connected to one or both RJ-48 ports, disconnect the cables.
6. Loosen the captive screws on the edges of the SCG faceplate.
7. Grasp the SCG by the handle on the faceplate, and slide it out of the chassis.
8. Place the SCG on the antistatic mat.

Copyright © 2019, Juniper Networks, Inc.

Figure 122: Removing an SCG

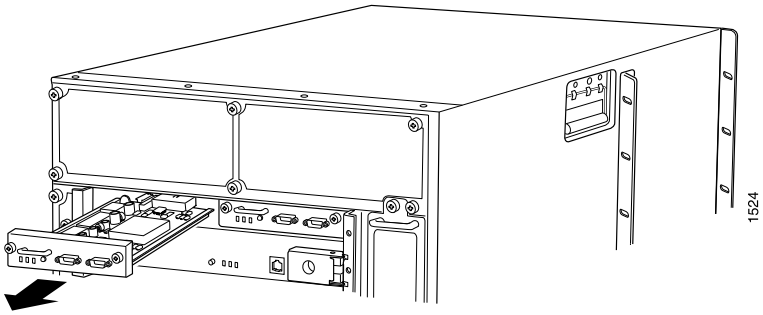

See Also

- T640 SONET Clock Generators (SCGs) Description on page 27
- T640 SONET Clock Generators (SCGs) LEDs on page 28
- Maintaining the T640 SCGs on page 463
- T640 Preventing Electrostatic Discharge Damage on page 528

Installing a T640 SCG

To install a replacement SCG (see Figure 123 on page 287):

1. Attach an electrostatic discharge (ESD) grounding strap to your bare wrist, and connect the strap to one of the ESD points on the chassis.

2. Carefully align the sides of the SCG with the guides in the SCG slot.

3. Grasp the SCG by its handle, and slide it straight into the chassis until it contacts the midplane.

4. Tighten the captive screws on the corners of the SCG faceplate.

5. To bring the SCG online, press the online/offline button until the green **OK** LED lights.

6. To verify that the SCG is installed correctly and is functioning normally, check the LEDs on the SCG faceplate. The green **OK** LED should light steadily. If the SCG is master, the blue **MASTER** LED should also light steadily.

   To check the status of the SCGs, use the following CLI command:

   ```
   user@host> show chassis environment scg
   ```

   For more information about using the CLI, see the Junos OS manuals.

7. If an external clocking device was connected to one or both RJ-48 ports, reconnect the cables.

Copyright © 2019, Juniper Networks, Inc.

Figure 123: Installing an SCG

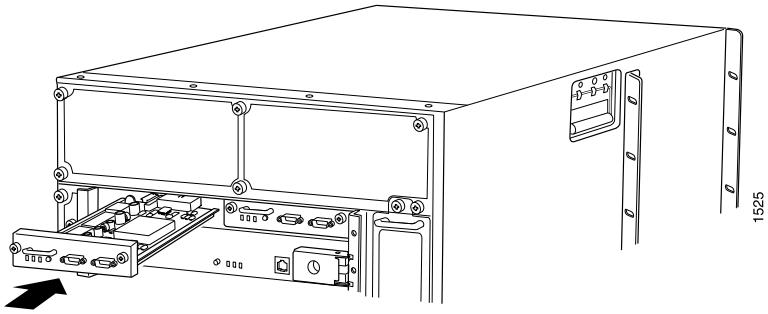

See Also

- T640 SONET Clock Generators (SCGs) Description on page 27
- T640 SONET Clock Generators (SCGs) LEDs on page 28
- Maintaining the T640 SCGs on page 463
- T640 Preventing Electrostatic Discharge Damage on page 528

Related Documentation

- T640 SONET Clock Generators (SCGs) Description on page 27
- T640 SONET Clock Generators (SCGs) LEDs on page 28
- Maintaining the T640 SCGs on page 463

Copyright © 2019, Juniper Networks, Inc.

CHAPTER 26

Replacing Cooling System Components

- Replacing a T640 Air Filter on page 289
- Replacing the T640 Standard Lower Front Fan Tray on page 296
- Replacing the T640 Standard Upper Front Fan Tray on page 298
- Replacing the T640 Standard Rear Fan Tray on page 300
- Upgrading to the T640 Quiet Fan Trays on page 303
- Replacing the T640 Quiet Lower Front Fan Tray on page 309
- Replacing the T640 Quiet Upper Front Fan Tray on page 312
- Replacing the T640 Quiet Rear Fan Tray on page 314

Replacing a T640 Air Filter

1. Removing a Front T640 Air Filter on page 289
2. Installing a Front T640 Air Filter on page 291
3. Removing a Rear T640 Air Filter on page 292
4. Installing a Rear T640 Air Filter on page 294

Removing a Front T640 Air Filter

The front air filter, located below the FPC card cage in the front of the chassis, and installs horizontally. The front air filter weighs approximately 1 lb (0.5 kg).The air filters are hot-insertable and hot-removable.

To remove the front air filter (see Figure 124 on page 290):

1. Attach an electrostatic discharge (ESD) grounding strap to your bare wrist, and connect the strap to one of the ESD points on the chassis.

2. Unwrap any PIC cables from the spools on the cable management system, and remove the cables from the tray. Arrange the cables so that they do not block the front of the cable management system and tray, and secure them with temporary fasteners so that they are not supporting their own weight as they hang from the connector.

Copyright © 2019, Juniper Networks, Inc.

CAUTION: Do not let fiber-optic cable hang free from the connector. Do not allow fastened loops of cable to dangle, which stresses the cable at the fastening point.

3. Simultaneously pull the two releases on the cable management system. Lift it up and outward to lock it in place to access the air filter.

4. Loosen the captive screws on the corners of the air filter faceplate.

5. Grasp the handles and pull the air filter straight out of the chassis.

6. Remove the filter element from the air filter frame (see Figure 125 on page 290).

Figure 124: Removing the Front Air Filter

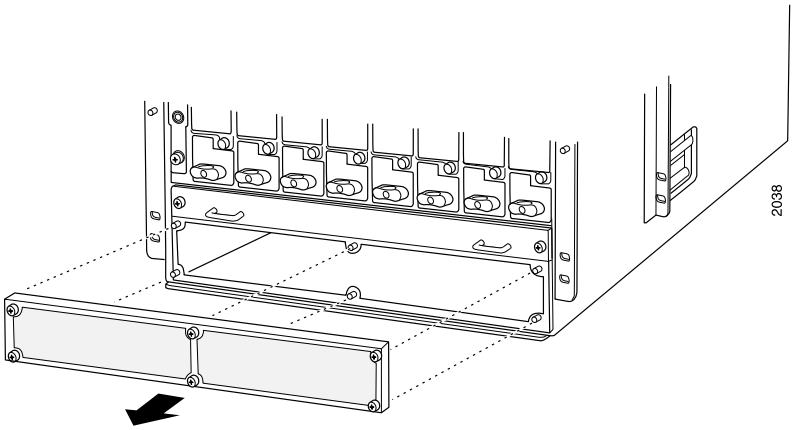

Figure 125: Replacing the Front Filter Element

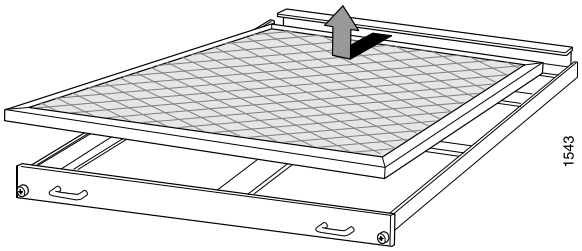

See Also

- T640 Preventing Electrostatic Discharge Damage on page 528
- T640 Cooling System Description on page 31
- Maintaining the T640 Air Filters on page 464
- Troubleshooting the T640 Cooling System on page 491

Copyright © 2019, Juniper Networks, Inc.

Installing a Front T640 Air Filter

To install the front air filter (see Figure 126 on page 291):

1. Attach an electrostatic discharge (ESD) grounding strap to your bare wrist, and connect the strap to one of the ESD points on the chassis.
2. Insert the filter element into the air filter frame.
3. Grasp the air filter by the handles on its faceplate, and slide it straight into the chassis.
4. Tighten the captive screws on the corners of the faceplate.
5. Unlock the cable management system, and lower it to the fully lowered position.
6. Rearrange the PIC cables in the cable management system.

Figure 126: Installing the Front Air Filter

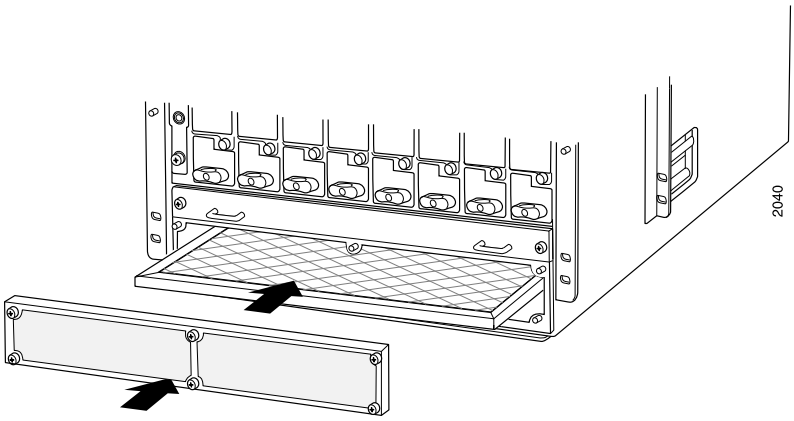

See Also

- T640 Preventing Electrostatic Discharge Damage on page 528
- T640 Cooling System Description on page 31
- Maintaining T640 PICs and PIC Cables on page 476
- Maintaining the T640 Air Filters on page 464
- Troubleshooting the T640 Cooling System on page 491

Copyright © 2019, Juniper Networks, Inc.

Removing a Rear T640 Air Filter

The rear air filter is located at the left rear edge of the chassis. The rear air filter weighs less than 1 lb (0.5 kg).

To remove the rear air filter:

1. Attach an electrostatic discharge (ESD) grounding strap to your bare wrist, and connect the strap to one of the ESD points on the chassis.

2. Loosen the captive screws at the top, center, and bottom of the air filter, using a Phillips (+) screwdriver, number 2.

3. Grasp the air filter cover by the captive screws, and pull firmly to remove the cover and honeycomb assembly from the chassis (see Figure 127 on page 293).

4. Press the filter element inward until it clears the hooks at the top and bottom of the air filter slot, then push it to the left to unseat it.

5. Move the tabs on the filter element to a horizontal position.

6. Grasp the tabs on the filter element and carefully pull it straight out from the chassis (see Figure 128 on page 294).

Copyright © 2019, Juniper Networks, Inc.

Figure 127: Removing the Rear Air Filter

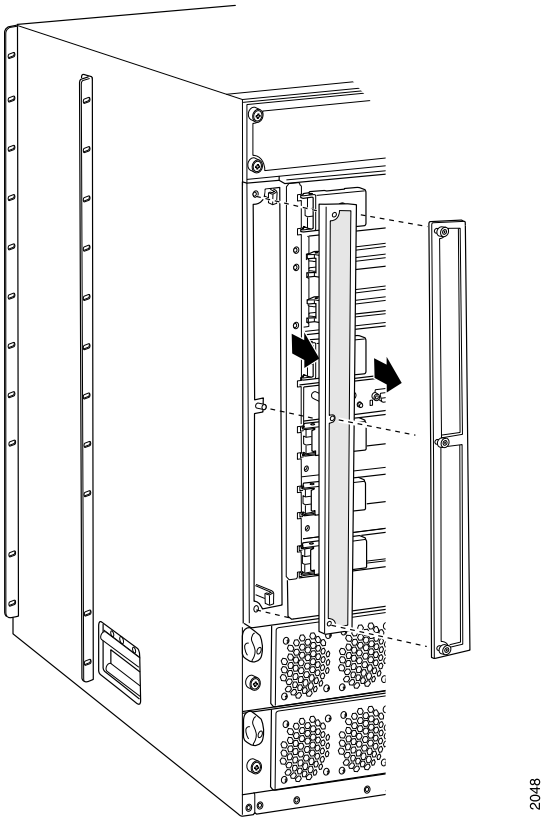

Figure 128: Removing the Rear Air Filter Element

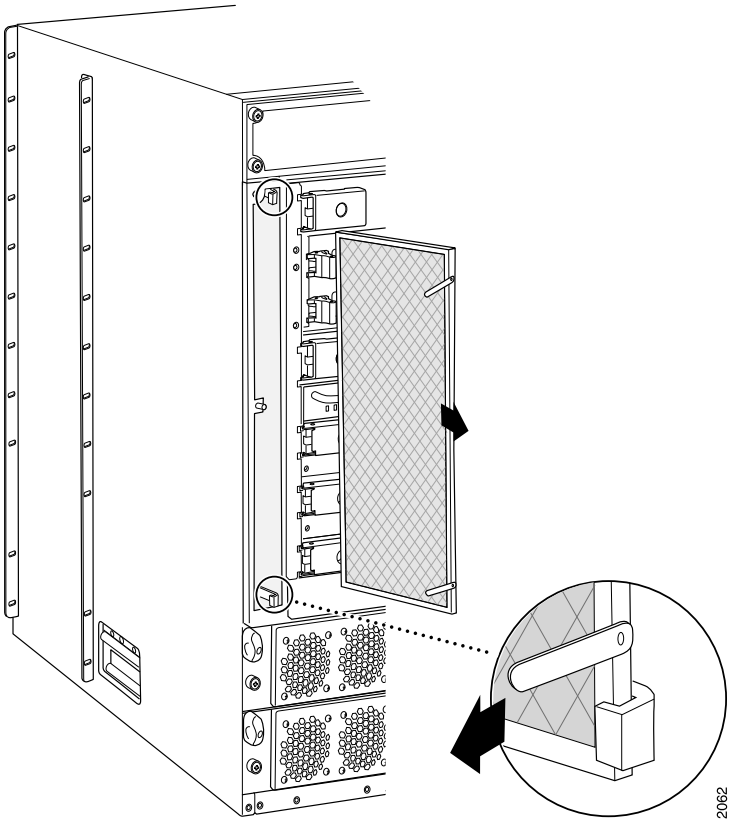

See Also

- T640 Preventing Electrostatic Discharge Damage on page 528
- T640 Cooling System Description on page 31
- Maintaining the T640 Air Filters on page 464
- Troubleshooting the T640 Cooling System on page 491

Installing a Rear T640 Air Filter

To install the rear air filter (see Figure 129 on page 295):

1. Attach an electrostatic discharge (ESD) grounding strap to your bare wrist, and connect the strap to one of the ESD points on the chassis.

2. Holding the filter by the tabs, carefully push the filter all the way into the air filter slot.

3. Holding the filter all the way in, push it to the right side of the slot until it is held in place behind the hooks.

4. Move the tabs to a vertical position.

Copyright © 2019, Juniper Networks, Inc.

5. Place the right edge of the honeycomb against the flange of the air filter slot.

6. Line up the holes at the top, center, and bottom of the honeycomb with the pins in the slot, and press the honeycomb into place.

7. Replace the air filter cover.

8. Firmly tighten the captive screws at the top, center, and bottom of the filter cover to secure it to the chassis, using a Phillips (+) screwdriver, number 2.

Figure 129: Installing the Rear Air Filter

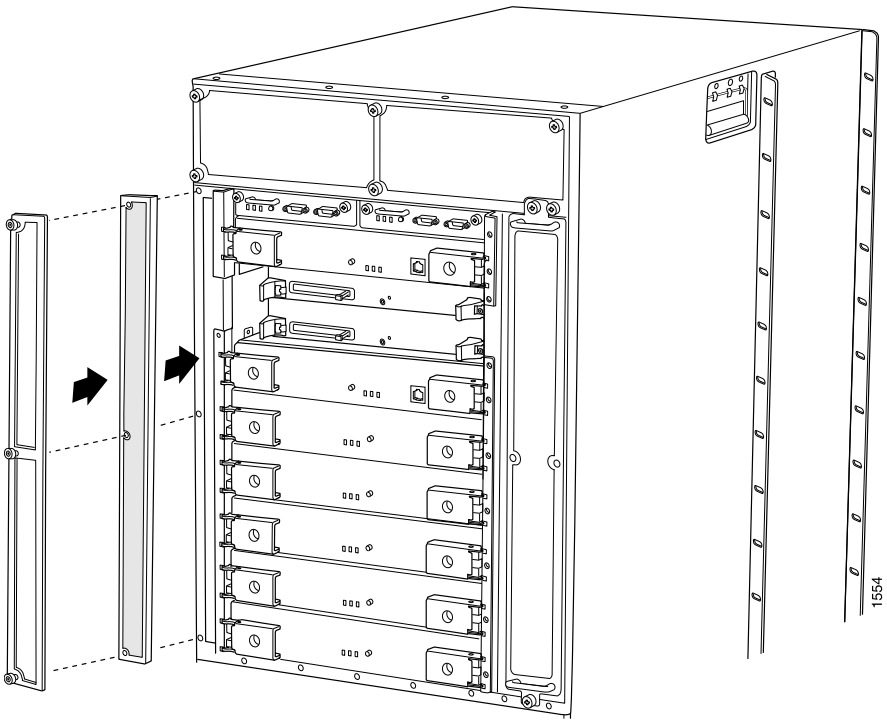

See Also

- T640 Preventing Electrostatic Discharge Damage on page 528
- T640 Cooling System Description on page 31
- Maintaining the T640 Air Filters on page 464
- Troubleshooting the T640 Cooling System on page 491

Related Documentation

- T640 Preventing Electrostatic Discharge Damage on page 528
- T640 Cooling System Description on page 31
- Maintaining the T640 Air Filters on page 464
- Troubleshooting the T640 Cooling System on page 491

Copyright © 2019, Juniper Networks, Inc.

Replacing the T640 Standard Lower Front Fan Tray

The lower front fan tray is located below the front air filter. Each standard front fan tray weighs about 18.6 lb (8.4 kg). The fan trays are hot-insertable and hot-removable. The standard upper and lower fan trays are interchangeable with each other.

1. Removing the T640 Standard Lower Front Fan Tray on page 296
2. Installing the T640 Standard Lower Front Fan Tray on page 297

Removing the T640 Standard Lower Front Fan Tray

The upper front fan tray is located above the FPC card cage, and the lower front fan tray is located below the front air filter. Each fan tray weighs about 18.6 lb (8.4 kg).

To remove a standard lower front fan tray:

1. Attach an electrostatic discharge (ESD) grounding strap to your wrist, and connect the strap to one of the ESD points on the chassis.

2. Unwrap any PIC cables from the spools on the cable management system and remove the cables from the tray. Arrange the cables so that they do not block the cable management system and tray, and secure them with temporary fasteners so that they are not supporting their own weight as they hang from the connector.

   CAUTION: **Do not let fiber-optic cable hang free from the connector. Do not allow fastened loops of cable to dangle, which stresses the cable at the fastening point.**

3. Simultaneously pull the two releases on the cable management system. Lift it up and outward to lock it in place to access the lower fan tray.

4. Rearrange the PIC cables in the cable management system. For more information about proper cable arrangement, see "Maintaining T640 PICs and PIC Cables" on page 476.

5. Loosen the captive screws on the corners of the fan tray faceplate.

6. Grasp the handles and pull the fan tray halfway out of the chassis.

   WARNING: **To avoid injury, keep tools and your fingers away from the fans as you slide the fan tray out of the chassis. The fans might still be spinning.**

7. When the fans stop spinning, place one hand under the fan tray to support it and pull the fan tray completely out of the chassis.

Copyright © 2019, Juniper Networks, Inc.

See Also

- T640 Cooling System Description on page 31
- Maintaining the T640 Fan Trays on page 465
- Troubleshooting the T640 Cooling System on page 491
- T640 Preventing Electrostatic Discharge Damage on page 528

Installing the T640 Standard Lower Front Fan Tray

To install a standard lower front fan tray:

1. Attach an electrostatic discharge (ESD) grounding strap to your wrist, and connect the strap to one of the ESD points on the chassis.
2. Grasp the fan tray by its handles and insert it straight into the chassis.
3. Tighten the captive screws on each side of the fan tray faceplate to secure it in the chassis.
4. Unlock the cable management system and lower it to the fully lowered position.
5. Rearrange the PIC cables in the cable management system. For more information about proper cable arrangement, see "Maintaining T640 PICs and PIC Cables" on page 476.

See Also

- T640 Cooling System Description on page 31
- Maintaining the T640 Fan Trays on page 465
- Troubleshooting the T640 Cooling System on page 491
- T640 Preventing Electrostatic Discharge Damage on page 528

Related Documentation

- T640 Cooling System Description on page 31
- Maintaining the T640 Fan Trays on page 465
- Troubleshooting the T640 Cooling System on page 491
- T640 Preventing Electrostatic Discharge Damage on page 528

Copyright © 2019, Juniper Networks, Inc.

Replacing the T640 Standard Upper Front Fan Tray

The upper front fan tray is located above the FPC card cage. Each standard front fan tray weighs about 18.6 lb (8.4 kg). The fan trays are hot-insertable and hot-removable. The standard upper and lower fan trays are interchangeable with each other.

1. Removing the T640 Standard Upper Front Fan Tray on page 298
2. Installing the T640 Standard Upper Front Fan Tray on page 299

Removing the T640 Standard Upper Front Fan Tray

To remove a standard upper front fan tray (see Figure 130 on page 298):

1. Attach an electrostatic discharge (ESD) grounding strap to your wrist, and connect the strap to one of the ESD points on the chassis.

2. Loosen the captive screws on the corners of the fan tray faceplate.

3. Grasp the handles and pull the fan tray halfway out of the chassis.

   WARNING: **To avoid injury, keep tools and your fingers away from the fans as you slide the fan tray out of the chassis. The fans might still be spinning.**

4. When the fans stop spinning, place one hand under the fan tray to support it and pull the fan tray completely out of the chassis.

Figure 130: Removing a Standard Upper Front Fan Tray

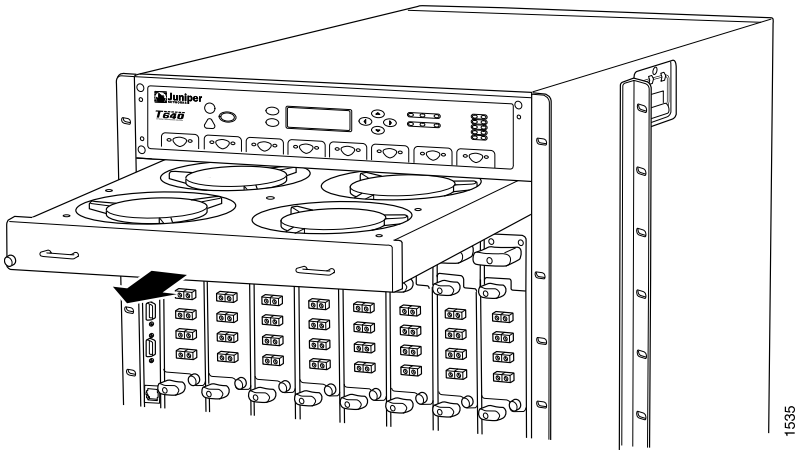

See Also

- T640 Cooling System Description on page 31
- Maintaining the T640 Fan Trays on page 465
- Troubleshooting the T640 Cooling System on page 491

Copyright © 2019, Juniper Networks, Inc.

- T640 Preventing Electrostatic Discharge Damage on page 528

Installing the T640 Standard Upper Front Fan Tray

To install a standard upper front fan tray (see Figure 131 on page 299):

1. Attach an electrostatic discharge (ESD) grounding strap to your wrist, and connect the strap to one of the ESD points on the chassis.

2. Grasp the fan tray by its handles and insert it straight into the chassis.

3. Tighten the captive screws on each side of the fan tray faceplate to secure it in the chassis.

Figure 131: Installing an Upper Front Fan Tray

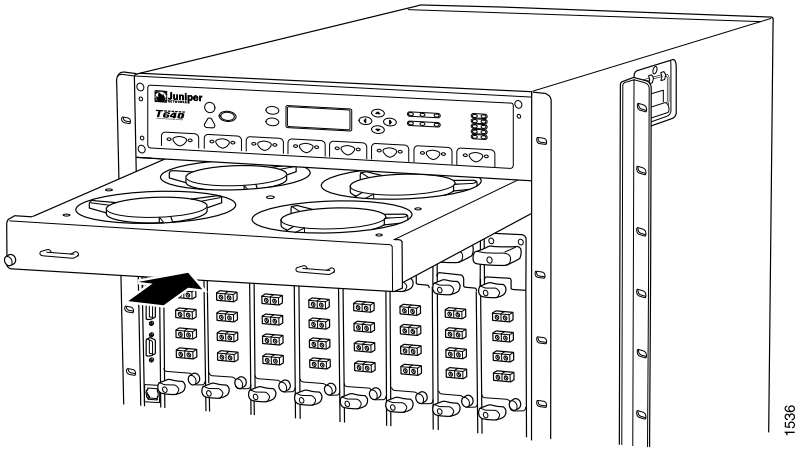

See Also

- T640 Cooling System Description on page 31
- Maintaining the T640 Fan Trays on page 465
- Troubleshooting the T640 Cooling System on page 491
- T640 Preventing Electrostatic Discharge Damage on page 528

Related Documentation

- T640 Cooling System Description on page 31
- Maintaining the T640 Fan Trays on page 465
- Troubleshooting the T640 Cooling System on page 491
- T640 Preventing Electrostatic Discharge Damage on page 528

Replacing the T640 Standard Rear Fan Tray

1. Removing the T640 Standard Rear Fan Tray on page 300
2. Installing the T640 Standard Rear Fan Tray on page 301

Removing the T640 Standard Rear Fan Tray

The rear fan tray is mounted vertically on the right side of the rear of the chassis. The fan tray weighs about 10 lb (4.5 kg).

CAUTION: **To maintain proper cooling, do not operate the router with the rear fan tray removed for more than 1 minute.**

To remove the rear fan tray (see Figure 132 on page 301):

1. Attach an electrostatic discharge (ESD) grounding strap to your bare wrist, and connect the strap to one of the ESD points on the chassis.

2. Loosen the captive screws on the top and bottom of the fan tray faceplate, using a Phillips (+) screwdriver, number 2.

3. Grasp the handles and pull the fan tray halfway out of the chassis.

   WARNING: **To avoid injury, keep tools and your fingers away from the fans as you slide the fan tray out of the chassis. The fans might still be spinning.**

4. When the fans stop spinning, grasp the handles and pull the fan tray completely out of the chassis.

Copyright © 2019, Juniper Networks, Inc.

Figure 132: Removing the Standard Rear Fan Tray

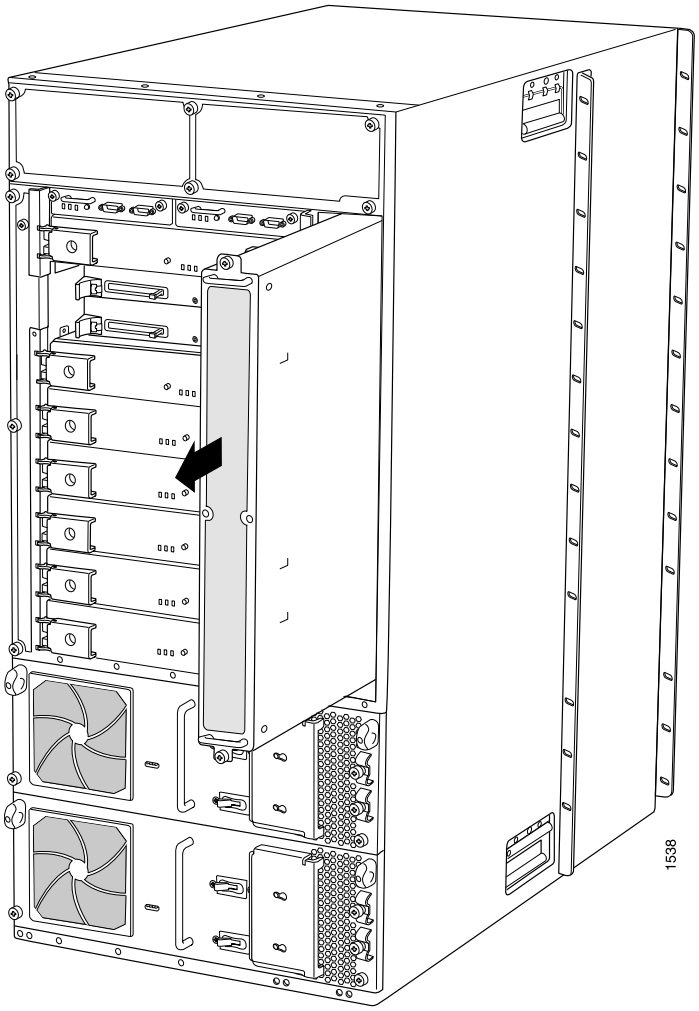

See Also

- T640 Cooling System Description on page 31
- Maintaining the T640 Fan Trays on page 465
- Troubleshooting the T640 Cooling System on page 491
- T640 Preventing Electrostatic Discharge Damage on page 528

Installing the T640 Standard Rear Fan Tray

To install a replacement standard rear fan tray (see Figure 133 on page 302):

1. Attach an electrostatic discharge (ESD) grounding strap to your bare wrist, and connect the strap to one of the ESD points on the chassis.

2. Grasp the fan tray by its handles, and insert it straight into the chassis.

3. Tighten the captive screws on the fan tray faceplate to secure it in the chassis, using a Phillips (+) screwdriver, number 2.

Figure 133: Installing a Rear Fan Tray

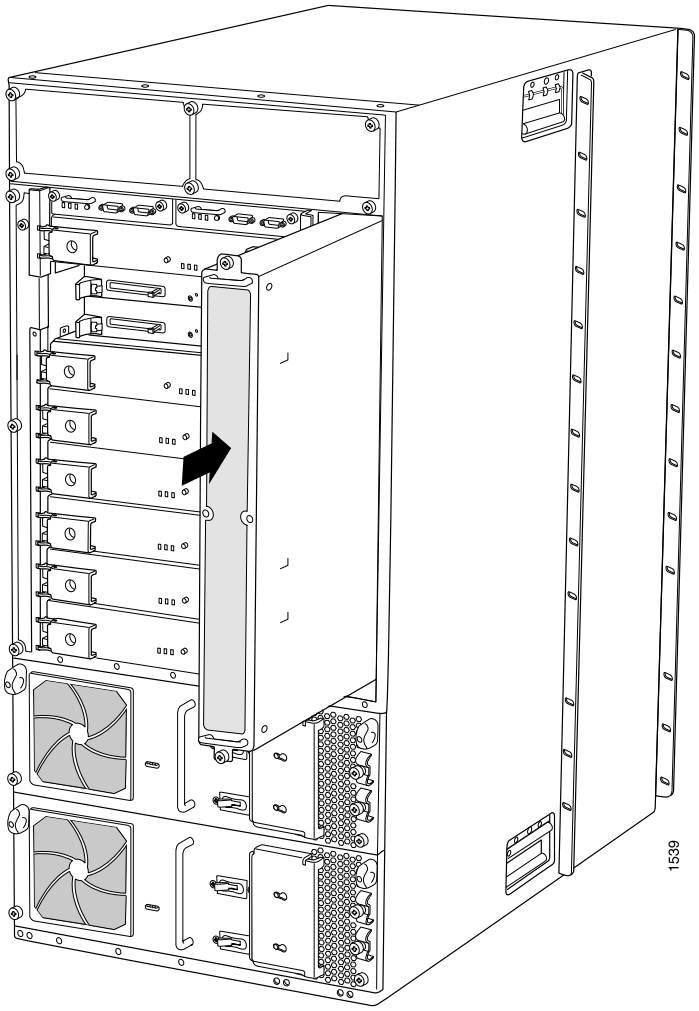

See Also

- T640 Cooling System Description on page 31
- Maintaining the T640 Fan Trays on page 465
- Troubleshooting the T640 Cooling System on page 491
- T640 Preventing Electrostatic Discharge Damage on page 528

Related Documentation

- T640 Cooling System Description on page 31
- Maintaining the T640 Fan Trays on page 465
- Troubleshooting the T640 Cooling System on page 491
- T640 Preventing Electrostatic Discharge Damage on page 528

Copyright © 2019, Juniper Networks, Inc.

Upgrading to the T640 Quiet Fan Trays

1. Upgrading the Standard Lower Front Fan Tray to a Quiet Lower Front Fan Tray on page 303
2. Removing the Standard Upper Front Fan Tray on page 304
3. Removing the Craft Interface on page 305
4. Installing the Air Deflector and Craft Interface on page 306
5. Installing the Quiet Upper Front Fan Tray on page 306
6. Upgrading the Standard Rear Fan Tray to a Quiet Rear Fan Tray on page 307

Upgrading the Standard Lower Front Fan Tray to a Quiet Lower Front Fan Tray

Each standard front fan tray weighs about 18.6 lb (8.4 kg). Each quiet front fan tray weighs about 17.8 lb (8.1 kg).

1. Attach an electrostatic discharge (ESD) grounding strap to your wrist, and connect the strap to one of the ESD points on the chassis.

2. Unwrap any PIC cables from the spools on the cable management system and remove the cables from the tray. Arrange the cables so that they do not block the cable management system and tray, and secure them with temporary fasteners so that they are not supporting their own weight as they hang from the connector.

   CAUTION: **Do not let fiber-optic cable hang free from the connector. Do not allow fastened loops of cable to dangle, which stresses the cable at the fastening point.**

3. Simultaneously pull the two releases on the cable management system. Lift it up and outward to lock it in place to access the lower fan tray.

4. Rearrange the PIC cables in the cable management system. For more information about proper cable arrangement, see "Maintaining T640 PICs and PIC Cables" on page 476.

5. Loosen the captive screws on the corners of the standard lower front fan tray faceplate.

6. Grasp the handles and pull the standard lower front fan tray halfway out of the chassis.

   WARNING: **To avoid injury, keep tools and your fingers away from the fans as you slide the fan tray out of the chassis. The fans might still be spinning.**

Copyright © 2019, Juniper Networks, Inc.

7. When the fans stop spinning, place one hand under the standard lower front fan tray to support it and pull the fan tray completely out of the chassis.

8. Locate the fan tray labeled **FAN-T-FBOT-S LOWER FANTRAY**.

9. Press the two latches located on each side of the quiet lower front fan tray up, and insert the fan tray straight into the lower front fan tray slot. See Figure 134 on page 304

10. Tighten the captive screws on each side of the quiet lower front fan tray faceplate to secure it in the chassis.

11. Unlock the cable management system and lower it to the fully lowered position.

12. Rearrange the PIC cables in the cable management system. For more information about proper cable arrangement, see "Maintaining T640 PICs and PIC Cables" on page 476.

Figure 134: Installing a Quiet Lower Front Fan Tray

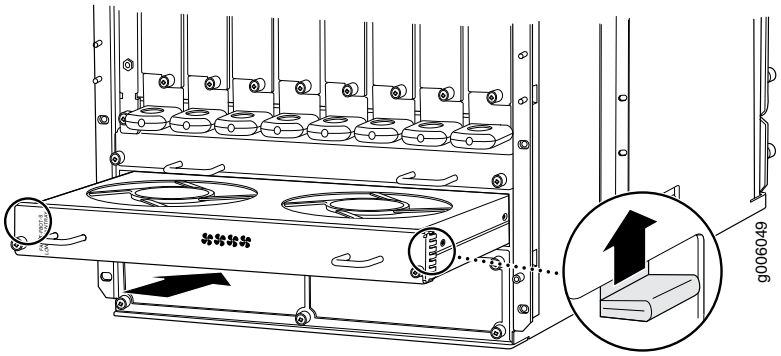

Removing the Standard Upper Front Fan Tray

The upper front fan tray is located above the FPC card cage. Each standard front fan tray weighs about 18.6 lb (8.4 kg). The fan trays are hot-removable.

To remove a standard upper front fan tray (see Figure 135 on page 305):

1. Attach an electrostatic discharge (ESD) grounding strap to your wrist, and connect the strap to one of the ESD points on the chassis.

2. Loosen the captive screws on the corners of the fan tray faceplate.

3. Grasp the handles and pull the fan tray halfway out of the chassis.

 Copyright © 2019, Juniper Networks, Inc.

WARNING: To avoid injury, keep tools and your fingers away from the fans as you slide the fan tray out of the chassis. The fans might still be spinning.

4. When the fans stop spinning, place one hand under the fan tray to support it and pull the fan tray completely out of the chassis.

Figure 135: Removing a Standard Upper Front Fan Tray

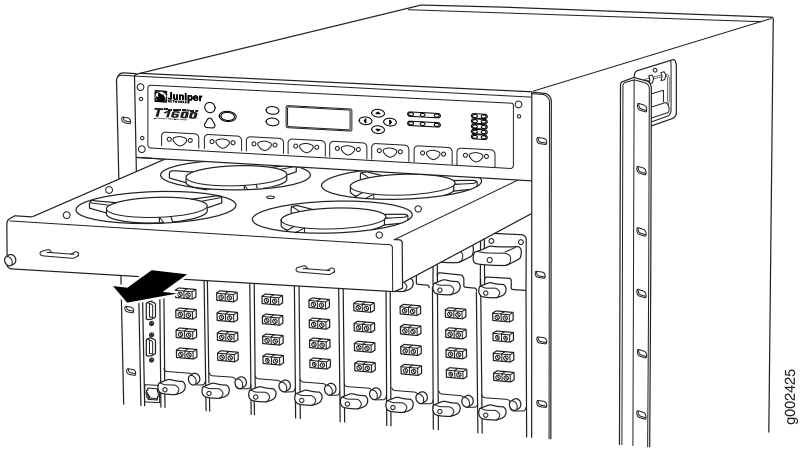

Removing the Craft Interface

The craft interface is located on the front of the chassis above the FPC card cage. The craft interface is hot-removable. To remove the craft interface (see Figure 136 on page 306):

1. Attach an electrostatic discharge (ESD) grounding strap to your bare wrist, and connect the strap to one of the ESD points on the chassis.

2. Completely loosen the screws at the four corners of the craft interface.

3. Insert the blade of a flat-blade screwdriver into the slot on one side of the craft interface, then gently pry that side out from the chassis.

4. Repeat Step 3 for the other side of the craft interface.

5. Grasp the craft interface by the top and bottom edges and carefully pull it straight out of the chassis.

6. Remove the Craft Interface Panel by loosening the four fasteners.

Figure 136: Removing the Craft Interface

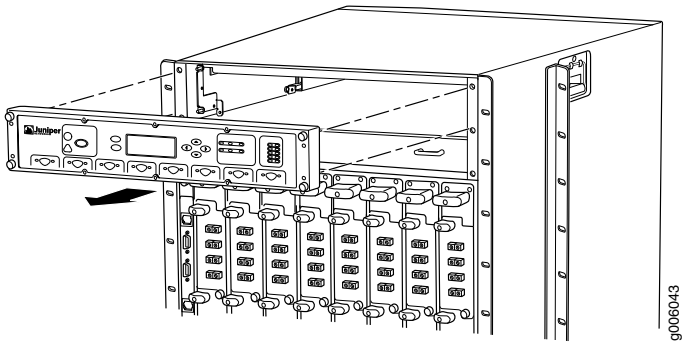

Installing the Air Deflector and Craft Interface

NOTE: If an air deflector is already installed, installing another air deflector is not required.

To install the air deflector:

1. Slide in the air deflector. See Figure 137 on page 306 for proper orientation of air deflector. Four holes align with the four standoffs used for mounting the craft interface.

2. Replace the craft interface and secure with the four fasteners.

Figure 137: Installing the Air Deflector

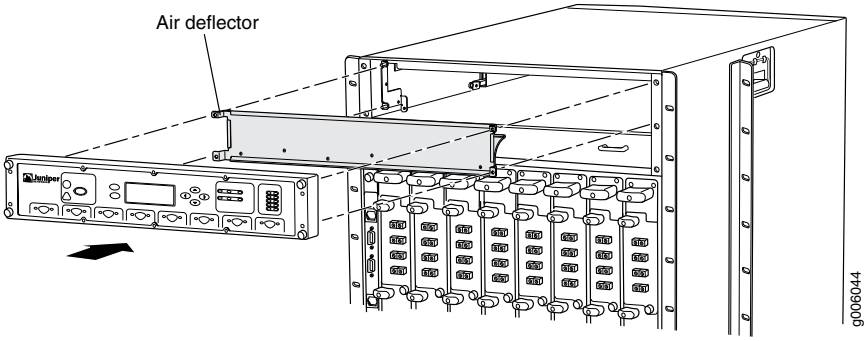

Installing the Quiet Upper Front Fan Tray

The upper front fan tray is located above the FPC card cage. Each quiet front fan tray weighs about 17.8 lb (8.1 kg). The fan trays are hot-insertable. The quiet upper and lower fan trays are not interchangeable with each other. The quiet upper front fan tray is labeled **FAN-T-FTOP-S UPPER FANTRAY**.

Copyright © 2019, Juniper Networks, Inc.

To install a quiet upper front fan tray (see Figure 138 on page 307):

1. Attach an electrostatic discharge (ESD) grounding strap to your wrist, and connect the strap to one of the ESD points on the chassis.

2. Locate the fan tray labeled **FAN-T-FTOP-S UPPER FANTRAY**.

3. Press the two latches located on each side of the quiet upper front fan tray up, and insert the fan tray straight into the upper front fan tray slot.

4. Tighten the captive screws on each side of the fan tray faceplate to secure it in the chassis.

Figure 138: Installing the Quiet Upper Front Fan Tray

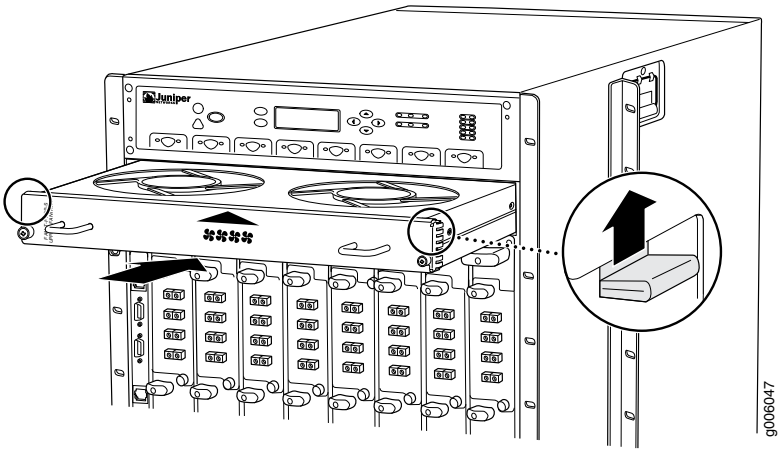

Upgrading the Standard Rear Fan Tray to a Quiet Rear Fan Tray

To upgrade the rear fan tray (see Figure 139 on page 308) and Figure 140 on page 309:

1. Attach an electrostatic discharge (ESD) grounding strap to your wrist, and connect the strap to one of the ESD points on the chassis.

2. Loosen the captive screws on the top and bottom of the standard fan tray faceplate.

3. Grasp the handles, and pull the standard rear fan tray halfway out of the chassis.

   WARNING: To avoid injury, keep tools and your fingers away from the fans as you slide the fan tray out of the chassis. The fans might still be spinning.

4. Wait for the fans to stop spinning.

5. After the fans stop spinning, place one hand under the fan tray to support it, and pull the standard fan tray completely out of the chassis.

6. Locate the quiet rear fan tray labeled **REAR FANTRAY FAN-R-S**.

7. Grasp the quiet rear fan tray by its handles and insert it straight into the chassis.

8. Tighten the captive screws on the quiet rear fan tray faceplate to secure it in the chassis, using a Phillips (+) screwdriver, number 2.

Figure 139: Removing the Standard Rear Fan Tray

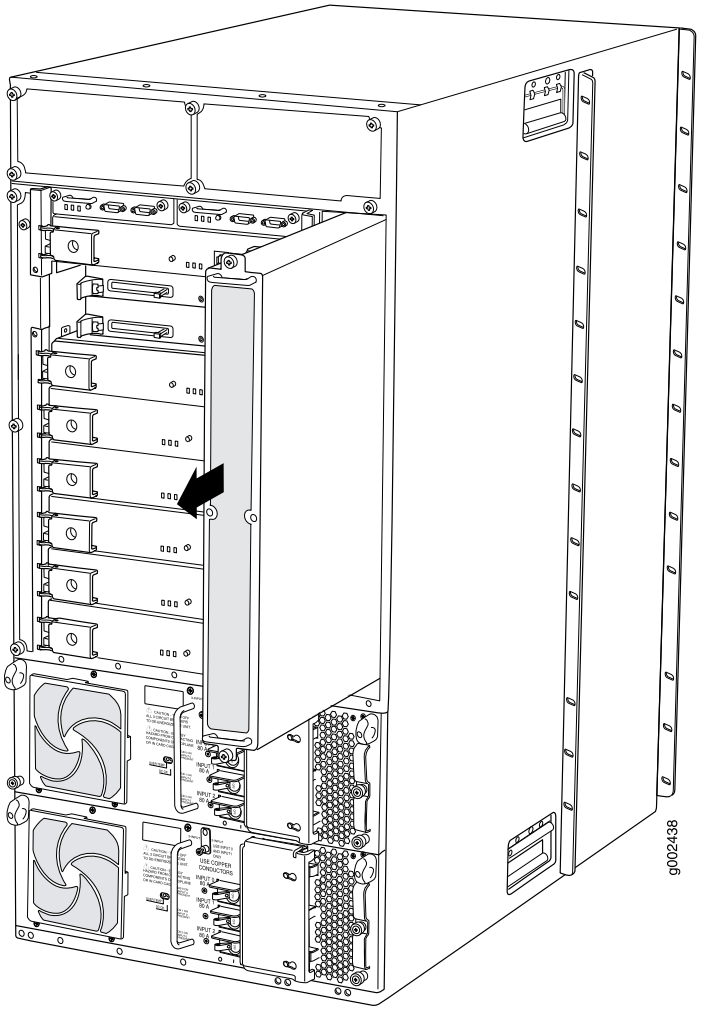

 Copyright © 2019, Juniper Networks, Inc.

Figure 140: Installing the Quiet Rear Fan Tray

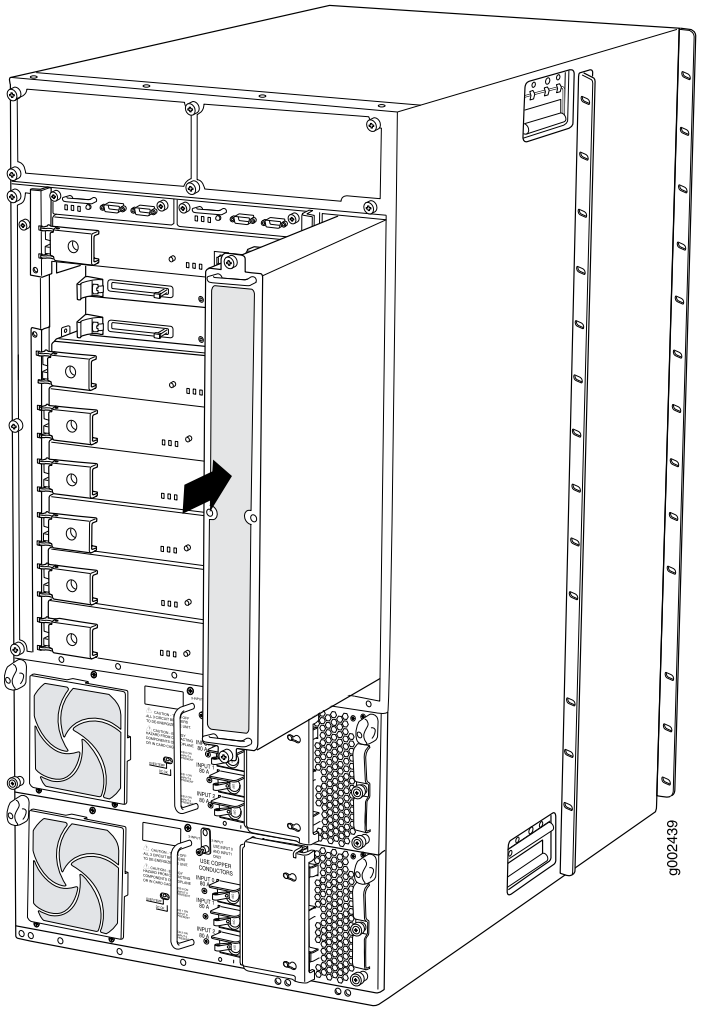

See Also

- T640 Cooling System Description on page 31
- Maintaining the T640 Fan Trays on page 465
- Troubleshooting the T640 Cooling System on page 491
- T640 Preventing Electrostatic Discharge Damage on page 528

Replacing the T640 Quiet Lower Front Fan Tray

The lower front fan tray is located below the front air filter. Each quiet front fan tray weighs about 17.8 lb (8.1 kg). The fan trays are hot-insertable and hot-removable. The quiet upper and lower fan trays are not interchangeable with each other. The quiet lower front fan tray is labeled **FAN-T-FBOT-S LOWER FANTRAY**.

1. Removing the T640 Quiet Lower Front Fan Tray on page 310
2. Installing the T640 Quiet Lower Front Fan Tray on page 311

Removing the T640 Quiet Lower Front Fan Tray

To remove the quiet lower front fan tray:

1. Attach an electrostatic discharge (ESD) grounding strap to your wrist, and connect the strap to one of the ESD points on the chassis.

2. Unwrap any PIC cables from the spools on the cable management system and remove the cables from the tray. Arrange the cables so that they do not block the cable management system and tray, and secure them with temporary fasteners so that they are not supporting their own weight as they hang from the connector.

   CAUTION: **Do not let fiber-optic cable hang free from the connector. Do not allow fastened loops of cable to dangle, which stresses the cable at the fastening point.**

3. Simultaneously pull the two releases on the cable management system. Lift it up and outward to lock it in place to access the lower fan tray.

4. Rearrange the PIC cables in the cable management system. For more information about proper cable arrangement, see "Maintaining T640 PICs and PIC Cables" on page 476.

5. Loosen the captive screws on the corners of the fan tray faceplate.

6. Grasp both sides of the fan tray, and pull the fan tray out of the chassis approximately 1 to 3 inches.

   WARNING: **To avoid injury, keep tools and your fingers away from the fans as you slide the fan tray out of the chassis. The fans might still be spinning.**

7. Press the two latches located on each side of the fan tray up to release the fan tray from the chassis.

8. When the fans stop spinning, place one hand under the fan tray to support it and pull the fan tray completely out of the chassis.

Copyright © 2019, Juniper Networks, Inc.

Figure 141: Removing the Quiet Lower Front Fan Tray

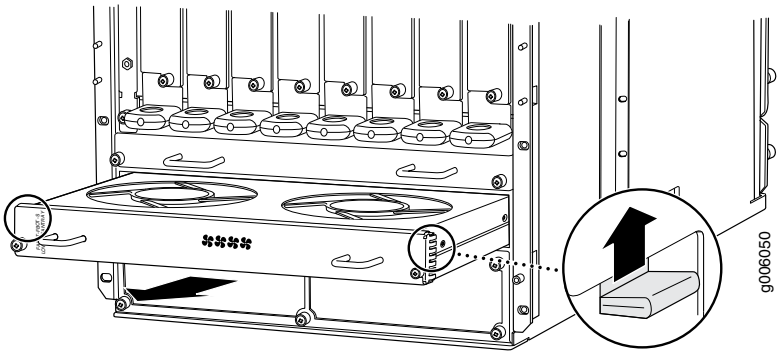

See Also

- T640 Cooling System Description on page 31
- Maintaining the T640 Fan Trays on page 465
- Troubleshooting the T640 Cooling System on page 491
- T640 Preventing Electrostatic Discharge Damage on page 528

Installing the T640 Quiet Lower Front Fan Tray

To install a quiet lower front fan tray (see Figure 142 on page 312):

1. Attach an electrostatic discharge (ESD) grounding strap to your wrist, and connect the strap to one of the ESD points on the chassis.
2. Locate a replacement quiet lower fan tray labeled **FAN-T-FBOT-S LOWER FANTRAY**.
3. Grasp the quiet lower front fan tray by its handles and insert it straight into the chassis.
4. Press the two latches located on each side of the quiet lower front fan tray up, and insert the fan tray straight into the lower front fan tray slot.
5. Tighten the captive screws on each side of the quiet lower front fan tray faceplate to secure it in the chassis.
6. Unlock the cable management system and lower it to the fully lowered position.
7. Rearrange the PIC cables in the cable management system. For more information about proper cable arrangement, see "Maintaining T640 PICs and PIC Cables" on page 476.

Figure 142: Installing the Quiet Lower Front Fan Tray

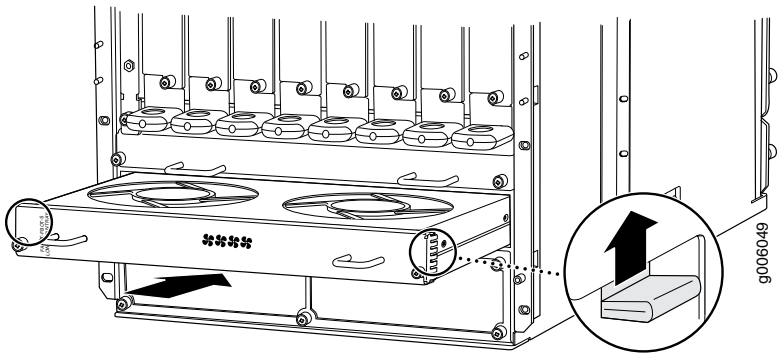

See Also

- T640 Cooling System Description on page 31
- Maintaining the T640 Fan Trays on page 465
- Troubleshooting the T640 Cooling System on page 491
- T640 Preventing Electrostatic Discharge Damage on page 528

Related Documentation

- T640 Cooling System Description on page 31
- Maintaining the T640 Fan Trays on page 465
- Troubleshooting the T640 Cooling System on page 491
- T640 Preventing Electrostatic Discharge Damage on page 528

Replacing the T640 Quiet Upper Front Fan Tray

The upper front fan tray is located above the FPC card cage. Each quiet front fan tray weighs about 17.8 lb (8.1 kg). The fan trays are hot-insertable and hot-removable. The quiet upper and lower fan trays are not interchangeable with each other. The quiet upper front fan tray is labeled **FAN-T-FTOP-S UPPER FANTRAY**.

1. Removing the T640 Quiet Upper Front Fan Tray on page 312
2. Installing the T640 Quiet Upper Front Fan Tray on page 313

Removing the T640 Quiet Upper Front Fan Tray

To remove a quiet upper front fan tray (see Figure 143 on page 313):

1. Attach an electrostatic discharge (ESD) grounding strap to your wrist, and connect the strap to one of the ESD points on the chassis.

2. Loosen the captive screws on the corners of the fan tray faceplate.

3. Grasp both sides of the fan tray, and pull the fan tray out of the chassis approximately 1 to 3 inches.

Copyright © 2019, Juniper Networks, Inc.

WARNING: To avoid injury, keep tools and your fingers away from the fans as you slide the fan tray out of the chassis. The fans might still be spinning.

4. Press the two latches located on each side of the fan tray up to release the fan tray from the chassis.

5. When the fans stop spinning, place one hand under the fan tray to support it and pull the fan tray completely out of the chassis.

Figure 143: Removing the Quiet Upper Front Fan Tray

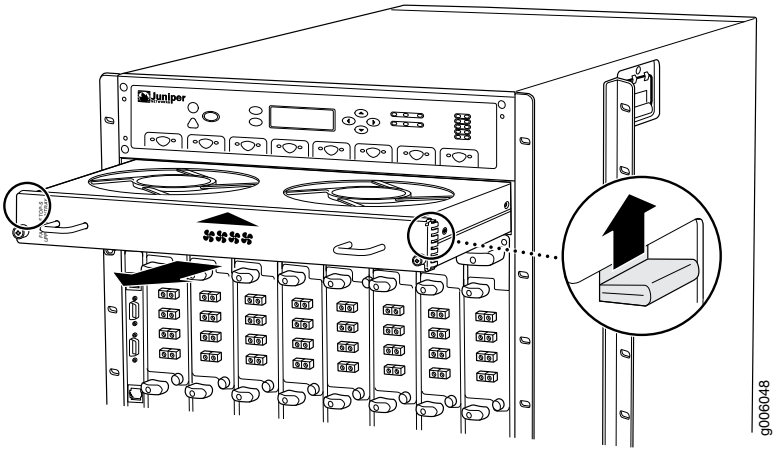

See Also

- T640 Cooling System Description on page 31
- Maintaining the T640 Fan Trays on page 465
- Troubleshooting the T640 Cooling System on page 491
- T640 Preventing Electrostatic Discharge Damage on page 528

Installing the T640 Quiet Upper Front Fan Tray

To install a quiet upper front fan tray (see Figure 144 on page 314):

1. Attach an electrostatic discharge (ESD) grounding strap to your wrist, and connect the strap to one of the ESD points on the chassis.

2. Locate a quiet upper front fan tray labeled **FAN-T-FTOP-S UPPER FANTRAY**.

3. Press the two latches located on each side of the quiet upper front fan tray up, and insert the fan tray straight into the upper front fan tray slot.

4. Tighten the captive screws on each side of the fan tray faceplate to secure it in the chassis.

Figure 144: Installing the Quiet Upper Front Fan Tray

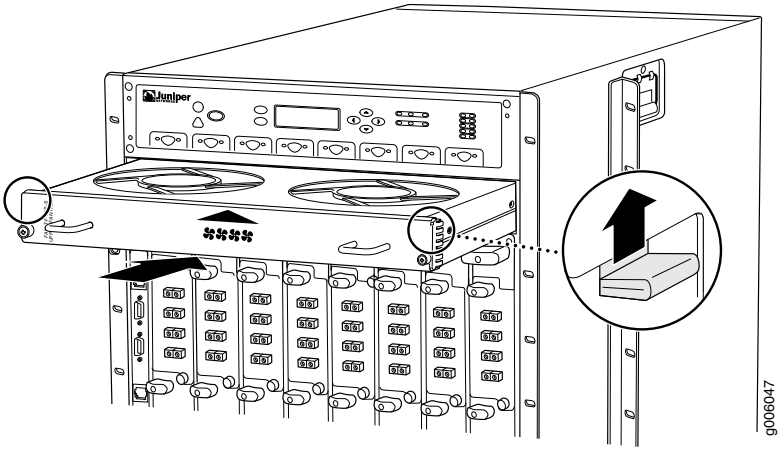

See Also

- T640 Cooling System Description on page 31
- Maintaining the T640 Fan Trays on page 465
- Troubleshooting the T640 Cooling System on page 491
- T640 Preventing Electrostatic Discharge Damage on page 528

Related Documentation

- T640 Cooling System Description on page 31
- Maintaining the T640 Fan Trays on page 465
- Troubleshooting the T640 Cooling System on page 491
- T640 Preventing Electrostatic Discharge Damage on page 528

Replacing the T640 Quiet Rear Fan Tray

The rear fan tray is mounted vertically on the right side of the rear of the chassis. The quiet rear fan tray contains eight fans, and is not interchangeable with the front fan trays. The quiet rear fan tray must be used in conjunction with the quiet front fan trays. The quiet rear fan tray weighs about 10 lb (4.5 kg).

1. Removing the T640 Quiet Rear Fan Tray on page 315
2. Installing the T640 Quiet Rear Fan Tray on page 316

Copyright © 2019, Juniper Networks, Inc.

Removing the T640 Quiet Rear Fan Tray

To remove the quiet rear fan tray (see Figure 145 on page 316):

1. Attach an electrostatic discharge (ESD) grounding strap to your bare wrist, and connect the strap to an approved site ESD grounding point.

2. Loosen the captive screws on the top and bottom of the fan tray faceplate.

3. Grasp the handles, and pull the fan tray halfway out of the chassis.

   WARNING: **To avoid injury, keep tools and your fingers away from the fans as you slide the fan tray out of the chassis. The fans might still be spinning.**

4. Wait for all the fans to stop spinning.

5. After the fans stop spinning, place one hand under the fan tray to support it, and pull the fan tray completely out of the chassis.

Copyright © 2019, Juniper Networks, Inc.

Figure 145: Removing the Quiet Rear Fan Tray

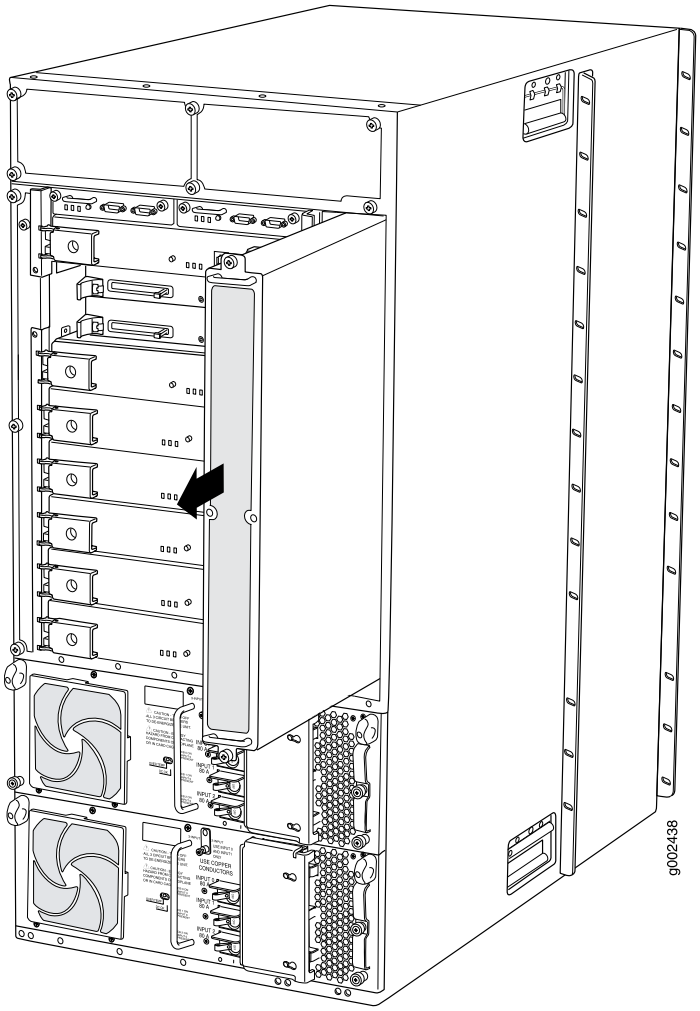

See Also

- T640 Cooling System Description on page 31
- Maintaining the T640 Fan Trays on page 465
- Troubleshooting the T640 Cooling System on page 491
- T640 Preventing Electrostatic Discharge Damage on page 528

Installing the T640 Quiet Rear Fan Tray

To install a replacement quiet rear fan tray (see Figure 146 on page 317):

1. Attach an electrostatic discharge (ESD) grounding strap to your wrist, and connect the strap to one of the ESD points on the chassis.

2. Locate a replacement quiet rear fan tray labeled **REAR FANTRAY FAN-R-S**.

 Copyright © 2019, Juniper Networks, Inc.

3. Grasp the fan tray by its handles and insert it straight into the chassis.

4. Tighten the captive screws on the fan tray faceplate to secure it in the chassis, using a Phillips (+) screwdriver, number 2.

Figure 146: Installing the Quiet Rear Fan Tray

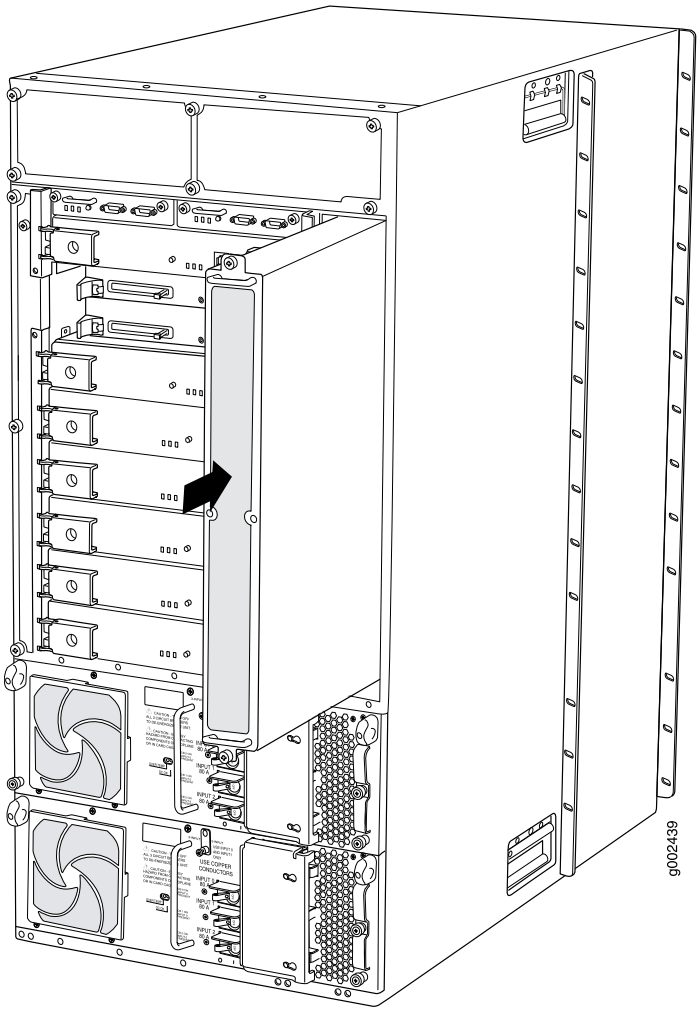

See Also

- T640 Cooling System Description on page 31
- Maintaining the T640 Fan Trays on page 465
- Troubleshooting the T640 Cooling System on page 491
- T640 Preventing Electrostatic Discharge Damage on page 528

Related Documentation

- T640 Cooling System Description on page 31
- Maintaining the T640 Fan Trays on page 465

- Troubleshooting the T640 Cooling System on page 491
- T640 Preventing Electrostatic Discharge Damage on page 528

Copyright © 2019, Juniper Networks, Inc.

CHAPTER 27

Replacing Host Subsystem Components

- Replacing the T640 Host Subsystem Components on page 319
- Replacing a T640 LCC-CB on page 322
- Replacing a T640 Standard Control Board or T-CB on page 325
- Replacing a T640 Routing Engine on page 329
- Replacing a CompactFlash Card in a T640 RE-C1800 Routing Engine on page 333
- Replacing a DIMM Module in a T640 Routing Engine on page 337
- Replacing a PC Card in a T640 Routing Engine on page 338
- Replacing a Solid-State Disk in a T640 RE-C1800 Routing Engine on page 341

Replacing the T640 Host Subsystem Components

- Taking the T640 Host Subsystem Offline on page 319

Taking the T640 Host Subsystem Offline

The host subsystem is taken offline and brought online as a unit. Before you replace a control board or Routing Engine, you must take the host subsystem offline.

Normally, if two host subsystems are installed in the T640 router, **RE0** functions as the master and **RE1** functions as the backup. You can remove the backup host subsystem (or either of its components) without interrupting the functioning of the router. If you take the master host subsystem offline, the backup host subsystem becomes the master (the router might reboot, depending on your configuration). If the router has only one host subsystem, taking the host subsystem offline causes the router to shut down.

Table 97 on page 319 explains the effect of taking the host subsystem offline.

Table 97: Effect of Taking the Host Subsystem Offline

Type of Host Subsystem	Effect of Taking the Host Subsystem Offline
Nonredundant host subsystem	The router shuts down.
Backup host subsystem	The functioning of the router is not interrupted. The backup host subsystem is hot-removable and hot-insertable.

Copyright © 2019, Juniper Networks, Inc.

Table 97: Effect of Taking the Host Subsystem Offline (continued)

Type of Host Subsystem	Effect of Taking the Host Subsystem Offline
Master host subsystem	The backup host subsystem becomes the master. The backup Routing Engine assumes Routing Engine functions. The master host subsystem is hot-pluggable. Removal or failure of the master Routing Engine affects forwarding and routing based on the high availability configuration: • Dual Routing Engines without any high availability features enabled—Traffic is interrupted while the Packet Forwarding Engine is reinitialized. All kernel and forwarding processes are restarted. When the switchover to the new master Routing Engine is complete, routing convergence takes place and traffic is resumed. • Graceful Routing Engine switchover (GRES) is enabled—Graceful Routing Engine switchover preserves interface and kernel information. Traffic is not interrupted. However, graceful Routing Engine switchover does not preserve the control plane. Neighboring routers detect that the router has restarted and react to the event in a manner prescribed by individual routing protocol specifications. To preserve routing without interruption during a switchover, graceful Routing Engine switchover must be combined with nonstop active routing. • Nonstop active routing is enabled (graceful Routing Engine switchover must be configured for nonstop active routing to be enabled)—Nonstop active routing supports Routing Engine switchover without alerting peer nodes that a change has occurred. Nonstop active routing uses the same infrastructure as graceful Routing Engine switchover to preserve interface and kernel information. However, nonstop active routing also preserves routing information and protocol sessions by running the routing protocol process (rpd) on both Routing Engines. In addition, nonstop active routing preserves TCP connections maintained in the kernel. • Graceful restart is configured—Graceful restart provides extensions to routing protocols so that neighboring helper routers restore routing information to a restarting router. These extensions signal neighboring routers about the graceful restart and prevent the neighbors from reacting to the router restart and from propagating the change in state to the network during the graceful restart period. Neighbors provide the routing information that enables the restarting router to stop and restart routing protocols without causing network reconvergence. Neighbors are required to support graceful restart. The routing protocol process (rpd) restarts. A graceful restart interval is required. For certain protocols, a significant change in the network can cause graceful restart to stop.

NOTE: Router performance might change if the backup Routing Engine's configuration differs from the former master's configuration. For the most predictable performance, configure the two Routing Engines identically, except for parameters unique to each Routing Engine.

NOTE: For information about configuring graceful Routing Engine switchover, graceful restart, and nonstop active routing, see the *High Availability Feature Guide*.

NOTE: The first supported release for graceful Routing Engine switchover and nonstop active routing on the T640 router is Junos OS Release 7.0 and Junos OS Release 8.4, respectively. Graceful restart software requirements depend on the routing protocols configured on the router. For the minimum software requirements for graceful restart, see the *High Availability Feature Guide*.

Copyright © 2019, Juniper Networks, Inc.

To take a host subsystem offline:

1. Determine whether the host subsystem is functioning as the master or as the backup, using one of the two following methods:

   - Check the Routing Engine LEDs on the craft interface. If the green **MASTER** LED is lit, the corresponding host subsystem is functioning as the master.
   - Issue the following CLI command. The master Routing Engine is designated **Master** in the **Current state** field:

     user@host> **show chassis routing-engine**

     ```
     Routing Engine status:
       Slot 0:
       Current state             Master
       Election priority         Master (default)
       Temperature            34 degrees C / 93 degrees F
         DRAM               2048 Mbytes
         CPU utilization:
         User                  0 percent
         Background            0 percent
         Kernel                1 percent
         Interrupt             0 percent
         Idle                 99 percent
         Start time             2002-01-22 05:21:31 UTC
         Uptime                 10 days, 16 hours, 4 minutes, 52 seconds
         Load averages:         1 minute   5 minute  15 minute
                                    0.00       0.00       0.00
     Routing Engine status:
       Slot 1:
       Current state             Empty
     ```

2. If the host subsystem is functioning as the master, switch it to backup using the CLI command:

   user@host> **request chassis routing-engine master switch**

3. To halt the router:

   user@host> **request system halt**

   Wait until a message appears on the console confirming that the operating system has halted.

   The command shuts down the Routing Engine cleanly, so its state information is preserved. For more information about the command, see *request system halt*.

   NOTE: **The SIBs might continue forwarding traffic for approximately 5 minutes after the request system halt command has been issued.**

4. On the console or other management device connected to the other Routing Engine, enter CLI operational mode and issue the following command.

```
user@host> request chassis cb offline slot n
```

n is 0 or 1 for the slot number of the host subsystem being taken offline.

5. Verify that the control board is offline:

```
user@host> show chassis environment cb
```

See Also

- T640 Host Subsystem Description on page 35

Related Documentation

- T640 Preventing Electrostatic Discharge Damage on page 528
- T640 Host Subsystem Description on page 35
- Taking the T640 Host Subsystem Offline on page 319
- Maintaining the T640 Host Subsystem on page 467
- T640 Routing Engine Functions on page 5
- T640 Routing Engine Interface Cable and Wire Specifications on page 153
- T640 Preventing Electrostatic Discharge Damage on page 528

Replacing a T640 LCC-CB

1. Removing a T640 LCC-CB on page 323
2. Installing a T640 LCC-CB on page 324

Copyright © 2019, Juniper Networks, Inc.

Removing a T640 LCC-CB

The router can have up to two LCC-CBs. They are located in the upper rear of the chassis in the slots marked **CB0** and **CB1**. Each LCC-CB weighs approximately 5 lb (2.3 kg).

CAUTION: **Before you replace an LCC-CB, you must take the host subsystem offline. If there is only one host subsystem, taking the host subsystem offline shuts down the router.**

The backup LCC-CB is hot-removable and hot-insertable.

CAUTION: **If the LCC-CB to be replaced is associated with the Routing Engine currently functioning as the master Routing Engine, switch it to the backup before removing the LCC-CB.**

To remove an LCC-CB (see Figure 147 on page 324):

1. Take the host subsystem offline. See *Taking the T1600 Host Subsystem Offline* .
2. Place an electrostatic bag or antistatic mat on a flat, stable surface.
3. Attach an electrostatic discharge (ESD) grounding strap to your bare wrist, and connect the strap to one of the ESD points on the chassis.
4. Loosen the captive screws (using a Phillips (+) screwdriver, number 2) on the ejector handles on both sides of the LCC-CB faceplate.
5. Flip the ejector handles outward to unseat the LCC-CB.
6. Grasp the ejector handles and slide the LCC-CB about halfway out of the chassis.
7. Place one hand underneath the LCC-CB to support it and slide it completely out of the chassis.
8. Place the LCC-CB on the antistatic mat.
9. If you are not replacing the LCC-CB now, install a blank panel over the empty slot.

Copyright © 2019, Juniper Networks, Inc.

Figure 147: Removing an LCC-CB

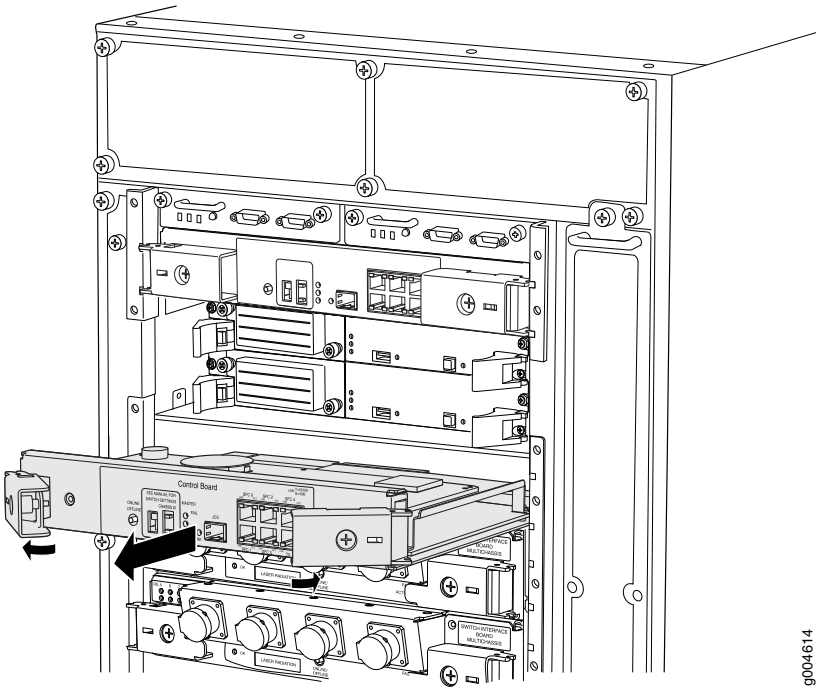

Installing a T640 LCC-CB

To install an LCC-CB (see Figure 148 on page 325):

1. Attach an electrostatic discharge (ESD) grounding strap to your bare wrist, and connect the strap to one of the ESD points on the chassis.

2. Carefully align the sides of the LCC-CB with the guides inside the chassis.

3. Slide the LCC-CB into the chassis, carefully ensuring that it is correctly aligned.

4. Grasp both ejector handles, and press them inward to seat the LCC-CB.

5. Tighten the captive screws on the ejector handles, using a Phillips (+) screwdriver, number 2.

6. Verify that the LCC-CB is functioning normally:

   - Check the LEDs on the LCC-CB faceplate. The green **OK** LED should light steadily a few minutes after the LCC-CB is installed. If power is applied to the Routing Engine and its corresponding LCC-CB is functioning normally, the LCC-CB comes online automatically.

 Copyright © 2019, Juniper Networks, Inc.

If the **FAIL** LED is lit steadily, remove and install the LCC-CB again. If the **FAIL** LED still lights steadily, the LCC-CB is not functioning properly. Contact your customer support representative.

- Use the **show chassis environment cb** command to check the status of the LCC-CB.

Figure 148: Installing an LCC-CB

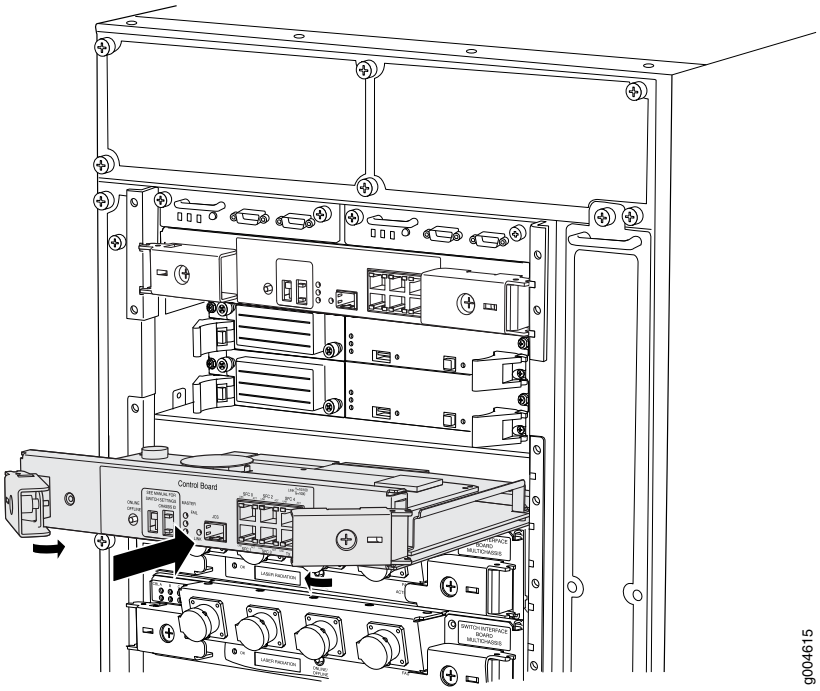

See Also

- T640 Preventing Electrostatic Discharge Damage on page 528
- T640 LCC-CB Description on page 67
- T640 LCC-CB LEDs on page 68
- Maintaining the T640 Control Boards on page 469
- Troubleshooting the T640 Control Board on page 495

Replacing a T640 Standard Control Board or T-CB

The router can have up to two control boards. You can use this procedure for either standard control boards or T-CBs. They are located in the upper rear of the chassis in the slots marked **CB0** and **CB1**. Each weighs approximately 5 lb (2.3 kg).

To replace a standard control board or T-CB, perform the following procedures:

1. Removing a T640 Standard Control Board or T-CB on page 326
2. Installing a T640 Standard Control Board or T-CB on page 327

Removing a T640 Standard Control Board or T-CB

CAUTION: Before you replace a control board, you must take the host subsystem offline. If there is only one host subsystem, taking the host subsystem offline shuts down the router. See "Taking the T640 Host Subsystem Offline" on page 319.

CAUTION: If the control board to be replaced is associated with the Routing Engine currently functioning as the master Routing Engine, switch it to the backup before removing the control board. See "Taking the T640 Host Subsystem Offline" on page 319.

To remove a standard control board or T-CB (see Figure 149 on page 327 and Figure 150 on page 327):

1. Take the host subsystem offline. See "Taking the T640 Host Subsystem Offline" on page 319.
2. Place an electrostatic bag or antistatic mat on a flat, stable surface.
3. Attach an electrostatic discharge (ESD) grounding strap to your bare wrist, and connect the strap to one of the ESD points on the chassis.
4. For T-CBs in a T640 router connected to a TX matrix router, disconnect the cable plugged into the port labeled **CIP**.
5. Loosen the captive screws (using a Phillips (+) screwdriver, number 2) on the ejector handles on both sides of the control board faceplate.
6. Flip the ejector handles outward to unseat the control board.
7. Grasp the ejector handles, and slide the control board about halfway out of the chassis.
8. Place one hand underneath the control board to support it, and slide it completely out of the chassis.
9. Place the control board on the antistatic mat.
10. If you are not replacing the control board now, install a blank panel over the empty slot.

Copyright © 2019, Juniper Networks, Inc.

Figure 149: Removing a Standard Control Board

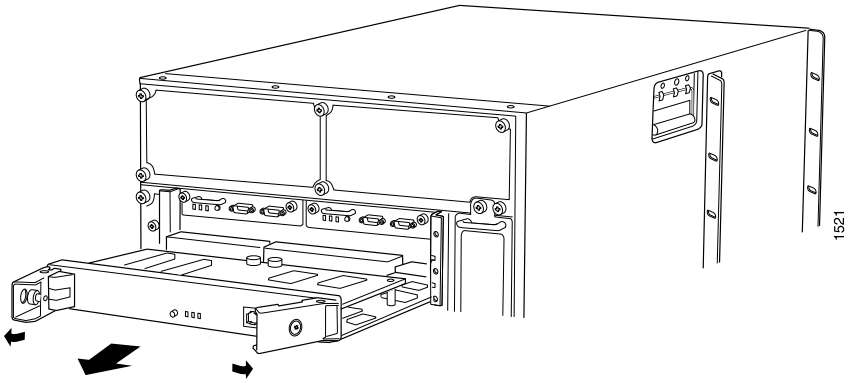

Figure 150: Removing a T-CB

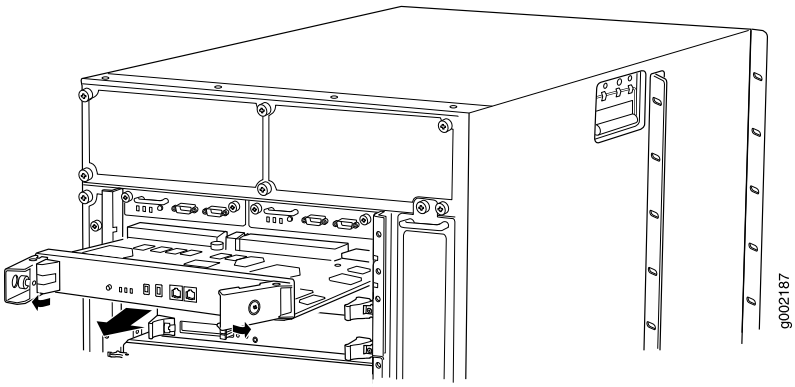

See Also

- T640 T Series Control Boards (T-CBs) Description on page 70
- T640 T Series Control Boards (T-CBs) LEDs on page 72
- Maintaining the T640 Control Boards on page 469
- T640 Preventing Electrostatic Discharge Damage on page 528

Installing a T640 Standard Control Board or T-CB

To install a standard control board or T-CB (see Figure 151 on page 328 and Figure 152 on page 329):

1. Attach an electrostatic discharge (ESD) grounding strap to your bare wrist, and connect the strap to one of the ESD points on the chassis.

2. Carefully align the sides of the control board with the guides inside the chassis.

3. Slide the control board into the chassis, carefully ensuring that it is correctly aligned.

4. Grasp both ejector handles, and press them inward to seat the control board.

5. Tighten the captive screws on the ejector handles, using a Phillips (+) screwdriver, number 2.

NOTE: **If power is applied to the Routing Engine and its corresponding control board is functioning normally, the control board comes online automatically.**

6. For a T-CB in a T640 router connected to a TX matrix router, reconnect the cable previously plugged into the **CIP** port.

7. Verify that the control board is functioning normally:

   - Check the LEDs on the control board faceplate. The green **OK** LED should light steadily a few minutes after the control board is installed. If the **FAIL** LED is lit steadily, remove and install the control board again. If the **FAIL** LED still lights steadily, the control board is not functioning properly. Contact your customer support representative.
   - Use the CLI command **show chassis environment cb** to check the status of the control board.

Figure 151: Installing a Standard Control Board

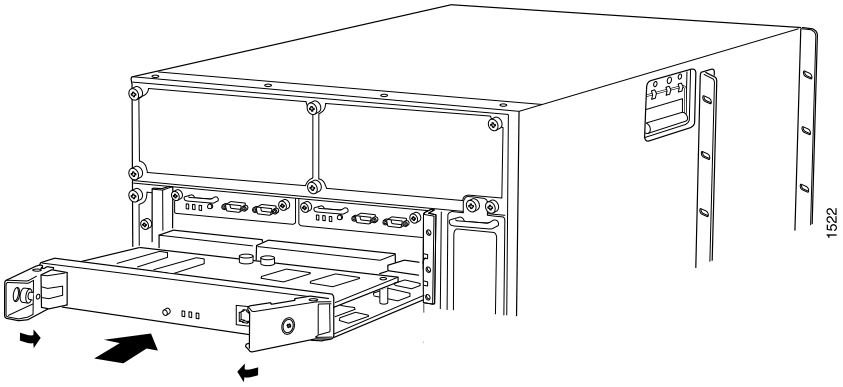

Copyright © 2019, Juniper Networks, Inc.

Figure 152: Installing a T-CB

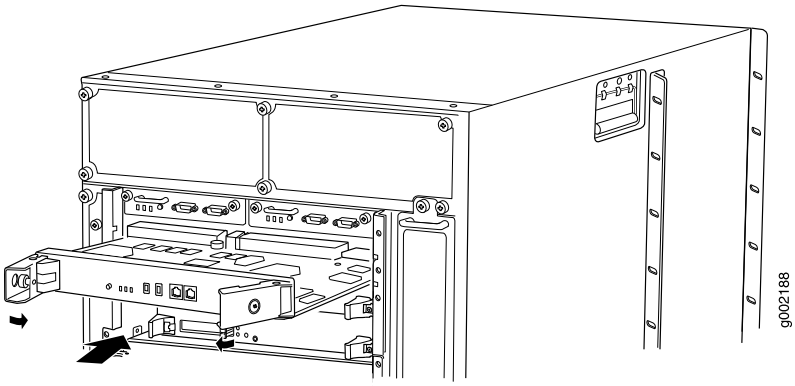

See Also

- T640 Preventing Electrostatic Discharge Damage on page 528
- T640 T Series Control Boards (T-CBs) Description on page 70
- T640 T Series Control Boards (T-CBs) LEDs on page 72
- Maintaining the T640 Control Boards on page 469

Related Documentation

- T640 Preventing Electrostatic Discharge Damage on page 528
- T640 Standard Control Boards LEDs on page 70
- T640 Standard Control Boards Description on page 69
- T640 T Series Control Boards (T-CBs) Description on page 70
- T640 T Series Control Boards (T-CBs) LEDs on page 72
- Maintaining the T640 Control Boards on page 469

Replacing a T640 Routing Engine

To replace a Routing Engine, perform the following procedures:

1. Removing a T640 Routing Engine on page 330
2. Installing a T640 Routing Engine on page 331

Removing a T640 Routing Engine

The router can have one or two Routing Engines. They are located in the upper rear of the chassis in the slots marked **RE0** and **RE1**. Each Routing Engine can weigh up to 2.4 lb (1.1 kg).

To remove a Routing Engine:

1. Take the host subsystem offline as described in "Taking the T640 Host Subsystem Offline" on page 319.

   CAUTION: **Before you replace a Routing Engine, you must take the host subsystem offline. If the Routing Engine to be replaced is currently functioning as the master Routing engine, switch it to be the backup before taking the host subsystem offline. If there is only one host subsystem, taking the host subsystem offline shuts down the router.**

2. Place an electrostatic bag or antistatic mat on a flat, stable surface.

3. Attach an electrostatic discharge (ESD) grounding strap to your bare wrist, and connect the strap to one of the ESD points on the chassis.

4. Loosen the captive screws on the corners of the Routing Engine cover.

5. Grasp the Routing Engine cover by its edges, and pull it free from the chassis (see Figure 153 on page 331).

6. If applicable, loosen the screws on the extractor handles at either end of the Routing Engine faceplate, using a Phillips screwdriver.

7. Press the red tabs on the ejector handles on both sides of the Routing Engine faceplate.

8. Flip the ejector handles outward to unseat the Routing Engine.

9. Grasp the Routing Engine by the ejector handles, and slide it about halfway out of the chassis.

10. Place one of your hands underneath the Routing Engine to support it and slide it completely out of the chassis.

Copyright © 2019, Juniper Networks, Inc.

11. Place the Routing Engine on the antistatic mat.

12. If you are not replacing the Routing Engine now, reinstall the Routing Engine cover and tighten the screws on the corners of the cover to secure it to the chassis (see "Reinstalling the Routing Engine Cover" on page 333).

Figure 153: Removing the Routing Engine Cover

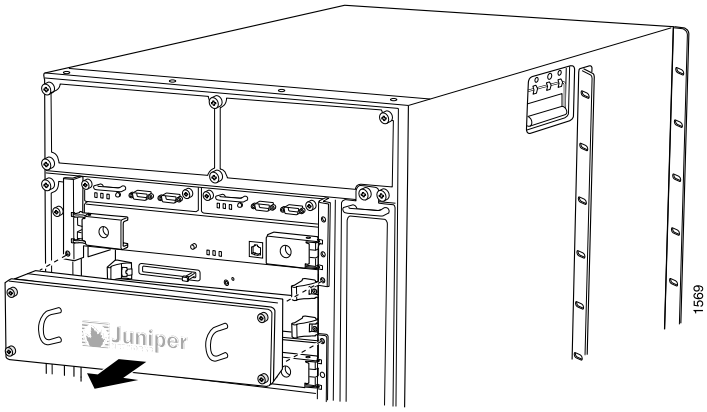

Figure 154: Removing a Routing Engine

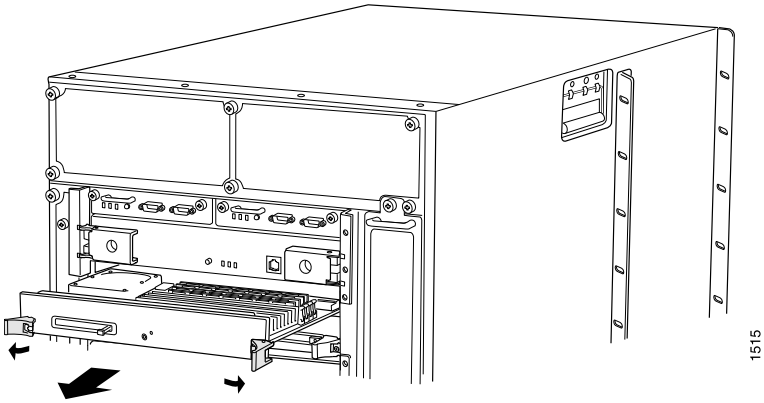

See Also

- T640 Routing Engine Functions on page 5
- Maintaining the T640 Host Subsystem on page 467
- T640 Routing Engine Interface Cable and Wire Specifications on page 153
- T640 Preventing Electrostatic Discharge Damage on page 528

Installing a T640 Routing Engine

To install a Routing Engine (see Figure 155 on page 333):

1. Attach an electrostatic discharge (ESD) grounding strap to your bare wrist, and connect the strap to one of the ESD points on the chassis.

2. Ensure that the ejector handles are not in the locked position. If necessary, press the red tabs and flip the ejector handles outward.

3. Place one hand underneath the Routing Engine to support it. With the other hand, grasp one of the ejector handles on the faceplate.

4. Carefully align the sides of the Routing Engine with the guides inside the chassis.

5. Slide the Routing Engine into the chassis until you feel resistance, then press the Routing Engine's faceplate until it engages the midplane connectors.

6. Press both the ejector handles inward to seat the Routing Engine.

   The Routing Engine might require several minutes to boot.

   If the router is powered on and the Routing Engine's corresponding control board is functioning normally, the Routing Engine comes online automatically.

7. If applicable, tighten the screws on the extractor handles, using a Phillips screwdriver. Be sure to tighten the screws enough to seat the Routing Engine properly.

8. Press the Routing Engine cover into place, then tighten the captive screws on the corners of the cover to secure it to the chassis (see Figure 156 on page 333).

9. Verify that the Routing Engine is installed correctly.

   - Check the **HOST0** and **HOST1** LEDs on the craft interface. If the router is operational and the Routing Engine is functioning properly, the green **OK** LED lights steadily. If the red **FAIL** LED lights steadily instead, remove and install the Routing Engine again. If the red **FAIL** LED still lights steadily, the Routing Engine is not functioning properly. Contact your customer support representative.
   - Check the status of the Routing Engine, use the CLI command:

     ```
     user@host> show chassis routing-engine
     ```

   For more information about using the CLI, see the Junos OS manuals.

 Copyright © 2019, Juniper Networks, Inc.

Figure 155: Installing a Routing Engine

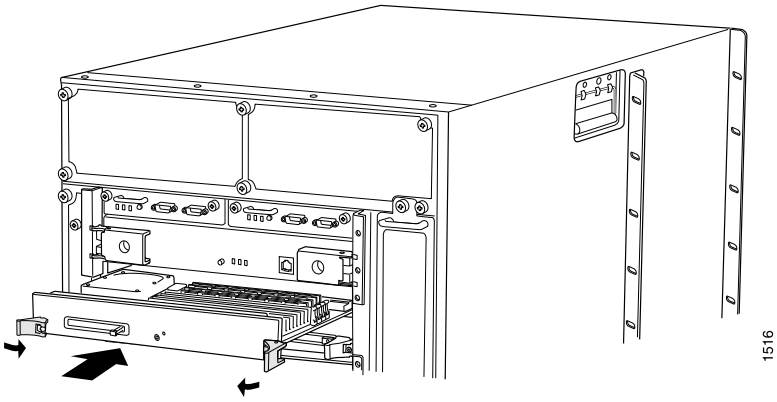

Figure 156: Reinstalling the Routing Engine Cover

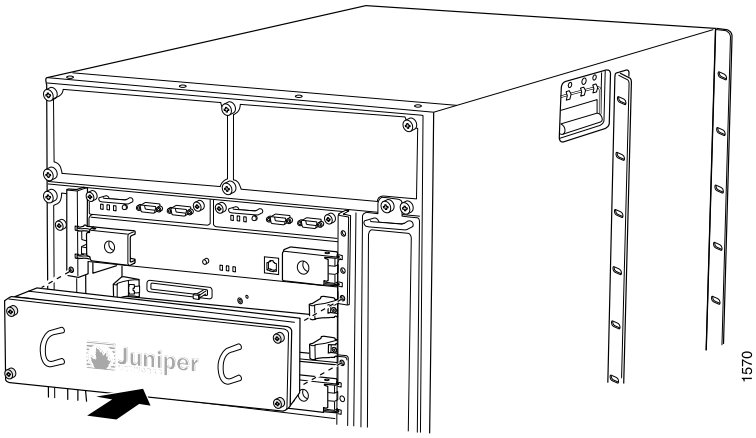

See Also

- Maintaining the T640 Host Subsystem on page 467
- T640 Routing Engine Functions on page 5
- T640 Preventing Electrostatic Discharge Damage on page 528

Related Documentation

- Maintaining the T640 Host Subsystem on page 467
- T640 Routing Engine Functions on page 5
- T640 Preventing Electrostatic Discharge Damage on page 528
- *Synchronizing Routing Engines* in the *CLI User Guide*

Replacing a CompactFlash Card in a T640 RE-C1800 Routing Engine

1. Preparing to Replace a CompactFlash Card in a T640 RE-C180 Routing Engine on page 334
2. Removing a CompactFlash Card in a T640 RE-C1800 Routing Engine on page 334

3. Installing a CompactFlash Card in a T640 RE-C1800 Routing Engine on page 335
4. Copying the Junos OS to the CompactFlash Card in a T640 RE-C1800 Routing Engine on page 336

Preparing to Replace a CompactFlash Card in a T640 RE-C180 Routing Engine

To prepare to replace a CompactFlash card in a T60 RE-C1800 Routing Engine:

1. Determine whether the host subsystem is functioning as the master or as the backup, using one of these methods:
   - Check the Host Subsystem LEDs on the craft interface. If the green **MASTER** LED is lit, the corresponding host subsystem is functioning as the master.
   - Check the **MASTER** LED on the control board. If the blue **MASTER** LED is lit, the host subsystem is functioning as the master.
   - Issue the **show chassis routing-engine** command:

     user@host> **show chassis routing-engine**

     ```
     Routing Engine status:
       Slot 0:
         Current state                  Master
     ...
     ```

     In this example, the Routing Engine in **Slot 0** is designated **Master** in the **Current state** field.
2. If the host subsystem is functioning as the master, switch it to backup. Issue the **request chassis routing-engine master switch** command.
3. From the master Routing Engine, power down the backup Routing Engine. Issue the **request system power-off other-routing-engine** command.

Removing a CompactFlash Card in a T640 RE-C1800 Routing Engine

The CompactFlash card is located in the slot labeled **CF** on the Routing Engine faceplate.

To remove the CompactFlash card (see Figure 157 on page 335):

1. Place an electrostatic bag or antistatic mat on a flat, stable surface.
2. Verify that the **Online**, **DISK1**, and **CF** LEDs on the backup Routing Engine faceplate are off.
3. Attach an electrostatic discharge (ESD) grounding strap to your bare wrist, and connect the strap to one of the ESD points on the chassis.
4. Using a Phillips (+) screwdriver, number 2, loosen the captive screws on the corners of the cover over the Routing Engine slots.

 Copyright © 2019, Juniper Networks, Inc.

5. Remove the cover from the Routing Engine slots.

   CAUTION: **Do not remove the cover if any of the LEDs are lit.**

6. Press the eject button on the right side of the CompactFlash card slot to release the CompactFlash card.

7. The CompactFlash card pops partially out of the slot. Grasp the card and pull it completely out of the slot.

8. Place the CompactFlash card on the antistatic mat.

Figure 157: Removing a CompactFlash Card

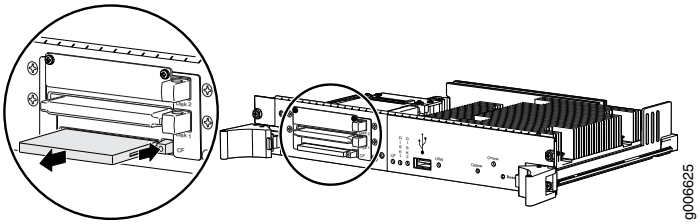

Installing a CompactFlash Card in a T640 RE-C1800 Routing Engine

To install a CompactFlash card (see Figure 158 on page 336):

1. Attach an electrostatic discharge (ESD) grounding strap to your bare wrist, and connect the strap to one of the ESD points on the chassis.

2. Remove the cover from the Routing Engine slots by loosening the captive screws on the corners of the cover (using a Phillips (+) screwdriver, number 2).

3. Insert the CompactFlash card into the CompactFlash card slot on the Routing Engine, with the logo facing up.

   CAUTION: **Be sure to insert the CompactFlash card with the label facing up. Inserting the CompactFlash card incorrectly might damage the Routing Engine.**

4. Press the card firmly all the way into the slot.

Copyright © 2019, Juniper Networks, Inc.

5. Reinstall the Routing Engine cover. Using a Phillips (+) screwdriver, number 2, tighten the screws on the corners of the cover to secure it to the Routing Engine.

6. From the master Routing Engine, power on the Routing Engine. For a standalone router, issue the **request system power-on other-routing-engine** command.

NOTE: After you replace a CompactFlash card, the Routing Engine boots from the solid-state disk (SSD). You may get an error message and be prompted for a keystroke. After you press the keystroke, it might take up to 10 minutes for the Routing Engine to reset and for the router to boot from the SSD.

Figure 158: Installing a CompactFlash Card

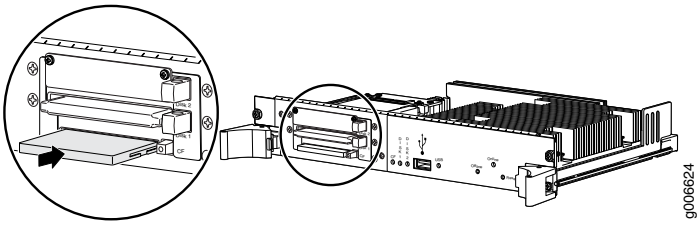

Copying the Junos OS to the CompactFlash Card in a T640 RE-C1800 Routing Engine

After installing the CompactFlash card for the first time, you must copy the software from the Routing Engine's solid-state disk (SSD) to the CompactFlash card.

NOTE: For more information about the commands for this procedure, see *request system snapshot*, *request system reboot*, and *show system boot-messages*.

To copy software to the CompactFlash card:

1. On the console or other management device connected to the Routing Engine, enter CLI operational mode.

2. Copy the currently running and active file system partitions on the router to standby partitions on the CompactFlash card. Issue the **request system snapshot partition** command.

3. Wait until a message appears on the console confirming that the snapshot partition procedure is complete.

4. Issue the **request system reboot** command to reboot the router's software.

Copyright © 2019, Juniper Networks, Inc.

5. Issue the **show system boot-messages** command to verify that the CompactFlash card is listed as the primary boot device. The output lists the devices mounted. The CompactFlash card is located at **ad0**.

Related Documentation

- T640 Routing Engine Description on page 36
- T640 RE-C1800 Description on page 42
- T640 RE-C1800 LEDs on page 43
- T640 Preventing Electrostatic Discharge Damage on page 528

Replacing a DIMM Module in a T640 Routing Engine

1. Removing a T640 DIMM Module on page 337
2. Installing a T640 DIMM Module on page 337

Removing a T640 DIMM Module

The DIMM modules are located on the top of the Routing Engine. To remove a DIMM module:

1. Place an electrostatic bag or antistatic mat on a flat, stable surface.
2. Attach an electrostatic discharge (ESD) grounding strap to your bare wrist, and connect the strap to one of the ESD points on the chassis.
3. Remove the Routing Engine.
4. Depending on which Routing Engine you are using, there are two different procedures for ejecting the DIMMs:
   - For Routing Engines with an ejector on one side of the DIMM, press the plastic ejector of the DIMM module. The edge of the module raises upward.
   - For Routing Engines with ejectors on each side of the DIMM, press the plastic ejectors on both sides of the DIMM module.
5. Grasp the DIMM module, being careful not to touch any electrical components on the module, and firmly pull it out of the slot on the Routing Engine.
6. Place the DIMM module on the antistatic mat or in the electrostatic bag.
7. Push the plastic ejectors to close the empty DIMM module slot.

See Also

- T640 Routing Engine Description on page 36
- Replacing a T640 Routing Engine on page 329

Installing a T640 DIMM Module

To insert a DIMM module into the Routing Engine:

1. Attach an electrostatic discharge (ESD) grounding strap to your bare wrist, and connect the strap to one of the ESD points on the chassis.
2. Remove the DIMM module from its electrostatic bag.
3. To open the empty DIMM slot, press the plastic ejectors open.
4. Grasp the DIMM module by the edges, being careful not to touch any electrical components.
5. Pressing firmly on both ends, push the module into the slot until the ejectors return completely to the closed position.
6. Install the Routing Engine.
7. You can view the the SDRAM configuration and verify the DIMM was installed correctly by issuing the **show chassis routing-engine** command.

Figure 159: Installing the DIMM Module

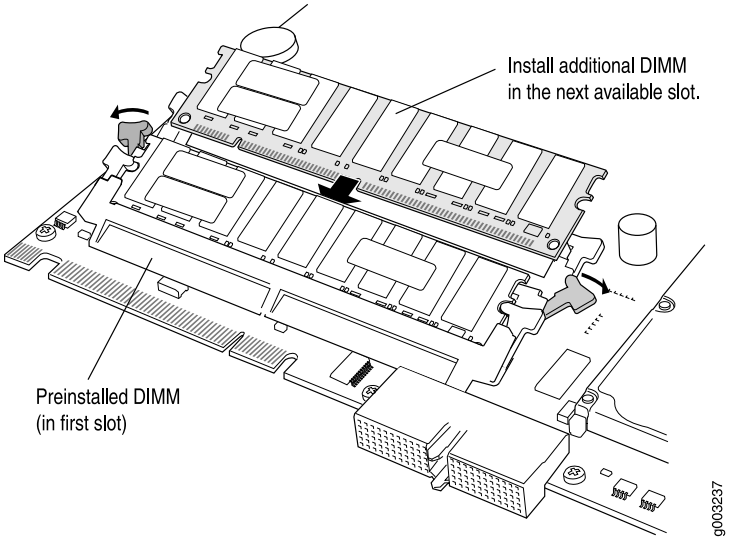

See Also

- T640 Routing Engine Description on page 36
- Replacing a T640 Routing Engine on page 329

Related Documentation

- T640 Routing Engine Description on page 36
- Replacing a T640 Routing Engine on page 329

Replacing a PC Card in a T640 Routing Engine

To replace a PC Card, perform the following procedures:

1. Removing a T640 PC Card on page 339
2. Installing a T640 PC Card on page 340

Copyright © 2019, Juniper Networks, Inc.

Removing a T640 PC Card

The PC Card is located in the slot labeled **PC CARD** on the Routing Engine. To remove the PC Card (see Figure 160 on page 340):

1. Place an electrostatic bag or antistatic mat on a flat, stable surface.

2. Attach an electrostatic discharge (ESD) grounding strap to your bare wrist, and connect the strap to one of the ESD points on the chassis.

3. Remove the Routing Engine cover by loosening the captive screws on the corners of its faceplate.

4. On the Routing Engine faceplate, press the eject button on the right side of the PC Card slot once to release the button. Press again to release the PC Card.

   NOTE: **The Routing Engine in your router might have two PC Card slots. In this case, use either slot. Do not install more than one PC Card in the Routing Engine.**

5. The PC Card pops partially out of the slot. Grasp the card and pull it completely out of the slot.

6. Place the PC Card on the antistatic mat.

7. If you are not replacing the PC Card now, reinstall the Routing Engine cover and tighten the screws on the corners of the cover to secure it to the chassis.

Copyright © 2019, Juniper Networks, Inc.

Figure 160: Removing a PC Card

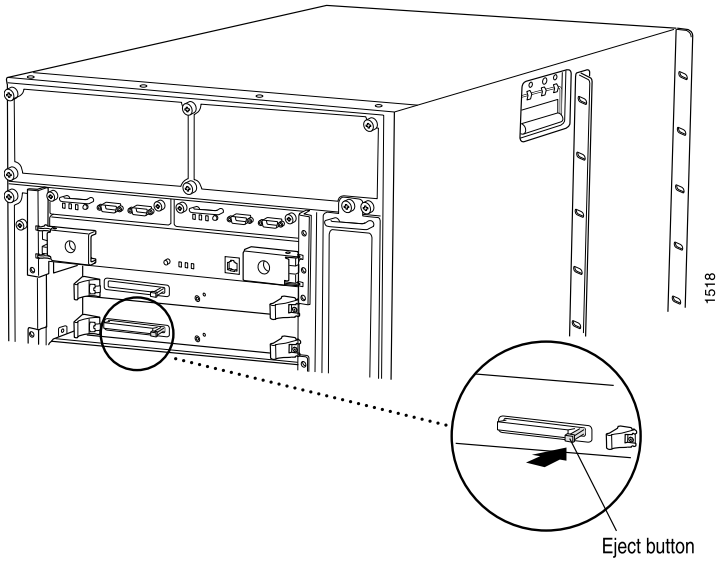

See Also

- Maintaining the T640 Host Subsystem on page 467
- T640 Routing Engine Functions on page 5
- T640 Preventing Electrostatic Discharge Damage on page 528

Installing a T640 PC Card

To install a PC Card (see Figure 161 on page 341):

1. Attach an electrostatic discharge (ESD) grounding strap to your bare wrist, and connect the strap to one of the ESD points on the chassis.

2. If the Routing Engine cover is in place, remove the cover by loosening the captive screws on the corners of its faceplate.

3. Insert the PC Card into the PC Card slot on the Routing Engine, with the Juniper Networks logo facing downward.

CAUTION: Be sure to insert the PC Card with the label facing downward. Inserting the PC Card incorrectly might damage the Routing Engine.

NOTE: The Routing Engine in your router might have two PC Card slots. In this case, use either slot. Do not install more than one PC Card in the Routing Engine.

Copyright © 2019, Juniper Networks, Inc.

4. Press the card firmly all the way into the slot.

5. Reinstall the Routing Engine cover and tighten the screws on the corners of the cover to secure it to the chassis.

Figure 161: Installing a PC Card

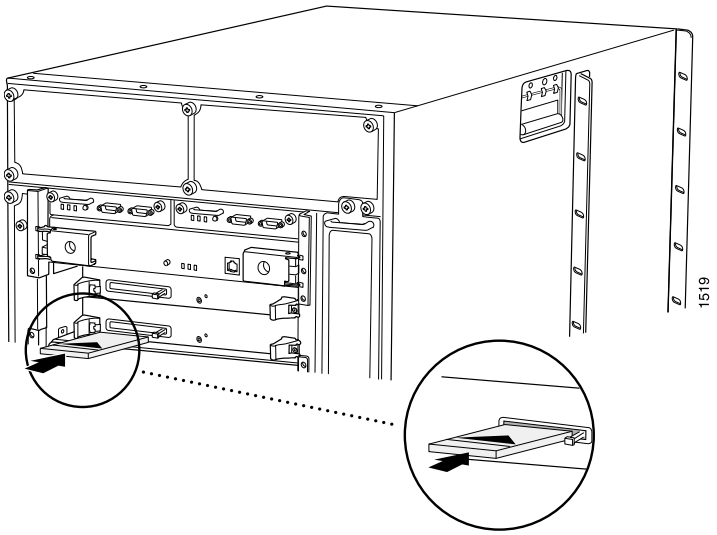

See Also

- Maintaining the T640 Host Subsystem on page 467
- T640 Routing Engine Functions on page 5
- T640 Preventing Electrostatic Discharge Damage on page 528

Related Documentation

- Maintaining the T640 Host Subsystem on page 467
- T640 Routing Engine Functions on page 5

Replacing a Solid-State Disk in a T640 RE-C1800 Routing Engine

1. Preparing to Replace a Solid-State Disk in a T640 RE-C1800 Routing Engine on page 341
2. Removing a Solid-State Disk in a T640 RE-C1800 Routing Engine on page 342
3. Installing a Solid-State Disk in a T640 RE-C1800 Routing Engine on page 343
4. Copying the Junos OS to the Solid-State Disk in a T640 RE-C1800 Routing Engine on page 344

Preparing to Replace a Solid-State Disk in a T640 RE-C1800 Routing Engine

To prepare to replace an SSD:

1. Determine whether the host subsystem is functioning as the master or as the backup, using one of these methods:

- Check the Host Subsystem LEDs on the craft interface. If the green **MASTER** LED is lit, the corresponding host subsystem is functioning as the master.
- Check the **MASTER** LED on the control board. If the blue **MASTER** LED is lit, the host subsystem is functioning as the master.
- Issue the **show chassis routing-engine** command.

  ```
  user@host> show chassis routing-engine
  Routing Engine status:
    Slot 0:
      Current state                  Master
  ...
  ```

  In this example, the Routing Engine in **Slot 0** is designated **Master** in the **Current state** field.

2. If the host subsystem is functioning as the master, switch it to backup. Issue the **request chassis routing-engine master switch** command.

3. From the master Routing Engine, power down the backup Routing Engine. Issue the **request system power-off other-routing-engine** command.

Removing a Solid-State Disk in a T640 RE-C1800 Routing Engine

The SSD is located in the slot labeled **DISK1** on the Routing Engine faceplate.

NOTE: **The DISK2 slot is not currently supported.**

To remove an SSD from a Routing Engine (see Figure 162 on page 343):

1. Place an electrostatic bag or antistatic mat on a flat, stable surface.

2. Verify that the **Online**, **DISK1**, and **CF** LEDs on the backup Routing Engine faceplate are off.

3. Attach an electrostatic discharge (ESD) grounding strap to your bare wrist, and connect the strap to one of the ESD points on the chassis.

4. Using a Phillips (+) screwdriver, number 2, loosen the captive screws on the corners of the cover.

5. Remove the cover from the Routing Engine slots.

   CAUTION: **Do not remove the cover if any of the LEDs on the Routing Engine faceplate are lit.**

Copyright © 2019, Juniper Networks, Inc.

6. Press the eject button on the right side of the **DISK1** slot to release the SSD.

7. The SSD pops partially out of the slot. Grasp the SSD and carefully slide it completely out of the slot.

8. Place the SSD on the antistatic mat.

Figure 162: Removing an SSD

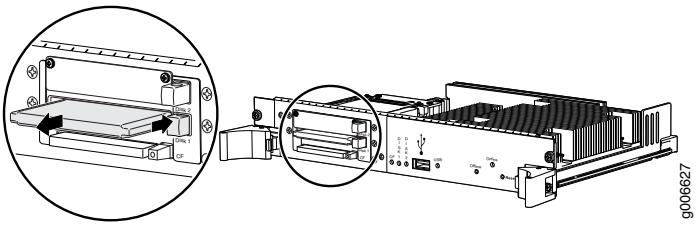

Installing a Solid-State Disk in a T640 RE-C1800 Routing Engine

To install an SSD in a Routing Engine (see Figure 163 on page 343):

1. Insert the SSD into the **DISK1** slot on the Routing Engine, with the logo facing down.

   CAUTION: **Be sure to insert the SSD with the label facing down. Inserting the SSD incorrectly might damage the Routing Engine.**

2. Slide the SSD into the slot until you feel resistance, carefully ensuring that it is correctly aligned.

3. Reinstall the Routing Engine cover. Using a Phillips (+) screwdriver, number 2, tighten the screws on the corners of the cover to secure it to the Routing Engine .

4. From the master Routing Engine, power on the Routing Engine. For a standalone router, issue the **request system power-on other-routing-engine** command.

Figure 163: Installing an SSD

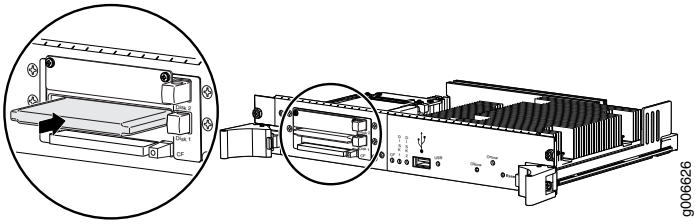

Copying the Junos OS to the Solid-State Disk in a T640 RE-C1800 Routing Engine

After installing an SSD for the first time, you must copy the software from the Routing Engine's CompactFlash card to the SSD.

NOTE: For more information about the commands for this procedure, see *request system partition hard-disk*, *request system reboot*, *request system snapshot*, and *show system boot-messages*.

To copy software to the SSD:

1. On the console or other management device connected to the Routing Engine, enter CLI operational mode.
2. Partition the SSD. Issue the **request system partition hard-disk** command.
3. Wait until a message appears on the console confirming that the partition procedure is complete.
4. Reboot the router's software. Issue the **request system reboot** command.
5. Back up the currently running and active file system partitions on the router to standby partitions that are not running. Issue the **request system snapshot** command.
6. Wait until a message appears on the console confirming that the snapshot procedure is complete.
7. Reboot the router's software again. Issue the **request system reboot** command.
8. Verify that the SSD is listed as the secondary boot device. The output lists the devices mounted. The SSD is located at **ad1**. Issue the **show system boot-messages** command.

Related Documentation

- T640 Routing Engine Description on page 36
- T640 RE-C1800 Description on page 42
- T640 RE-C1800 LEDs on page 43
- T640 Preventing Electrostatic Discharge Damage on page 528

Copyright © 2019, Juniper Networks, Inc.

CHAPTER 28

Replacing Line Card Components

- Replacing a T640 FPC on page 345
- Replacing a T640 PIC on page 352
- Replacing T640 PIC Cables on page 358

Replacing a T640 FPC

The FPCs are hot-insertable and hot-removable. When you remove an FPC, the router continues to function, although the PIC interfaces installed on the FPC being removed no longer function.

The router holds up to eight FPCs, which are installed vertically in the front of the router. An empty FPC weighs approximately 25 lb (11.3 kg) and a fully configured FPC can weigh up to 32 lb (14.5 kg).

1. Removing a T640 FPC on page 345
2. Installing a T640 FPC on page 348

Removing a T640 FPC

To remove an FPC (see Figure 164 on page 348):

1. Have ready a replacement FPC or FPC blank panel and an antistatic mat for the FPC. Also have ready rubber safety caps for each PIC using an optical interface on the FPC that you are removing.

2. Attach an electrostatic discharge (ESD) grounding strap to your bare wrist, and connect the strap to one of the ESD points on the chassis.

3. Label the cables connected to each PIC on the FPC so that you can later reconnect the cables to the correct PICs.

4. Use one of the following methods to take the FPC offline:

   - Press and hold the FPC online/offline button. The green OK LED next to the button begins to blink. Hold the button down until the LED goes out. The LEDs and online/offline button for each FPC are located directly above it on the craft interface.

- Issue the CLI command:

  `user@host>`**request chassis fpc slot** *`slot-number`* **offline**

  For more information about the command, see *request chassis fpc*.

5. Disconnect the cables from the PICs installed in the FPC. Immediately cover each fiber-optic transceiver and the end of each cable with a rubber safety cap. Arrange the disconnected cables in the cable management system, to prevent the cables from developing stress points.

   WARNING: Do not look directly into the ends of fiber-optic cables or into the transceivers on the PIC faceplate. Fiber-optic transceivers and cable connected to transceivers emit laser light that can damage your eyes.

   CAUTION: Do not leave a fiber-optic transceiver uncovered except when inserting or removing cable. The safety cap keeps the port clean and prevents accidental exposure to laser light.

   CAUTION: Avoid bending fiber-optic cable beyond its minimum bend radius. An arc smaller than a few inches in diameter can damage the cable and cause problems that are difficult to diagnose.

6. If you are removing a Type 2 FPC or Type 3 FPC, loosen the screws inside the ejector handles at the top and bottom of the FPC faceplate.

7. Simultaneously turn both the ejector handles counterclockwise to unseat the FPC.

8. Grasp the handles, and slide the FPC straight out of the card cage halfway.

9. Place one hand around the front of the FPC (the PIC housing) and the other hand under it to support it. Slide the FPC completely out of the chassis, and place it on the antistatic mat or in the electrostatic bag.

   CAUTION: The weight of the FPC is concentrated in the back end. Be prepared to accept the full weight—up to 32 lb (14.5 kg)—as you slide the FPC out of the chassis.

   When the FPC is out of the chassis, do not hold it by the ejector handles or edge connectors. They cannot support its weight.

Copyright © 2019, Juniper Networks, Inc.

Do not stack FPCs on top of one another after removal. Place each one individually in an electrostatic bag or on its own antistatic mat on a flat, stable surface.

10. If necessary, remove each installed PIC from the FPC. For information about removing a PIC, see "Removing a T640 PIC" on page 353.

11. After you remove each PIC, immediately place it on an antistatic mat or in an electrostatic bag.

12. If you are not reinstalling a FPC into the emptied FPC slot within a short time, install a blank FPC panel over the slot to maintain proper airflow in the FPC card cage.

CAUTION: After removing an FPC from the chassis, wait at least 30 seconds before reinserting it, removing an FPC from a different slot, or inserting an FPC into a different slot.

Figure 164: Removing a T640 FPC

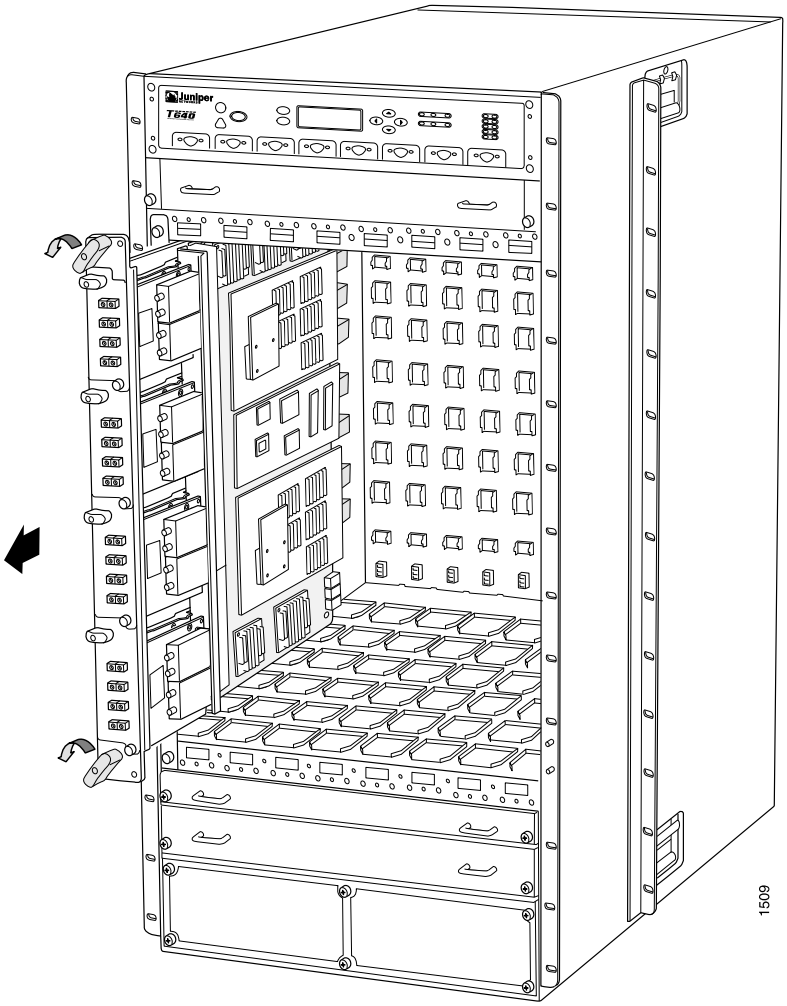

See Also

- T640 FPC Description on page 73
- Maintaining T640 FPCs on page 470
- Troubleshooting the T640 FPCs on page 496
- T640 Preventing Electrostatic Discharge Damage on page 528

Installing a T640 FPC

To install an FPC (see Figure 166 on page 352):

1. Attach an electrostatic discharge (ESD) grounding strap to your bare wrist, and connect the strap to one of the ESD points on the chassis.

2. Place the FPC on an antistatic mat.

Copyright © 2019, Juniper Networks, Inc.

3. Take each PIC to be installed in the replacement FPC out of its electrostatic bag, and identify the slot on the FPC where it will be connected.

4. Verify that each fiber-optic PIC has a rubber safety cap covering the PIC transceiver. If it does not, cover the transceiver with a safety cap.

5. Install each PIC into the appropriate slot on the FPC. For information on installing a PIC, see "Installing a T640 PIC" on page 355.

6. Locate the slot in the FPC card cage in which you plan to install the FPC.

7. Inspect the slot in the FPC card cage to verify that there are no missing or bent pins on the midplane.

8. Inspect the FPC to verify that the connectors are not misaligned or damaged.

   CAUTION: **When the FPC is out of the chassis, do not hold it by the ejector handles or edge connectors. They cannot support its weight.**

9. Verify that the FPC is right-side up, with the components on the right of the FPC.

10. Lift the FPC into place and carefully align the bottom and top of the FPC with the guides inside the card cage.

Figure 165: Installing an FPC

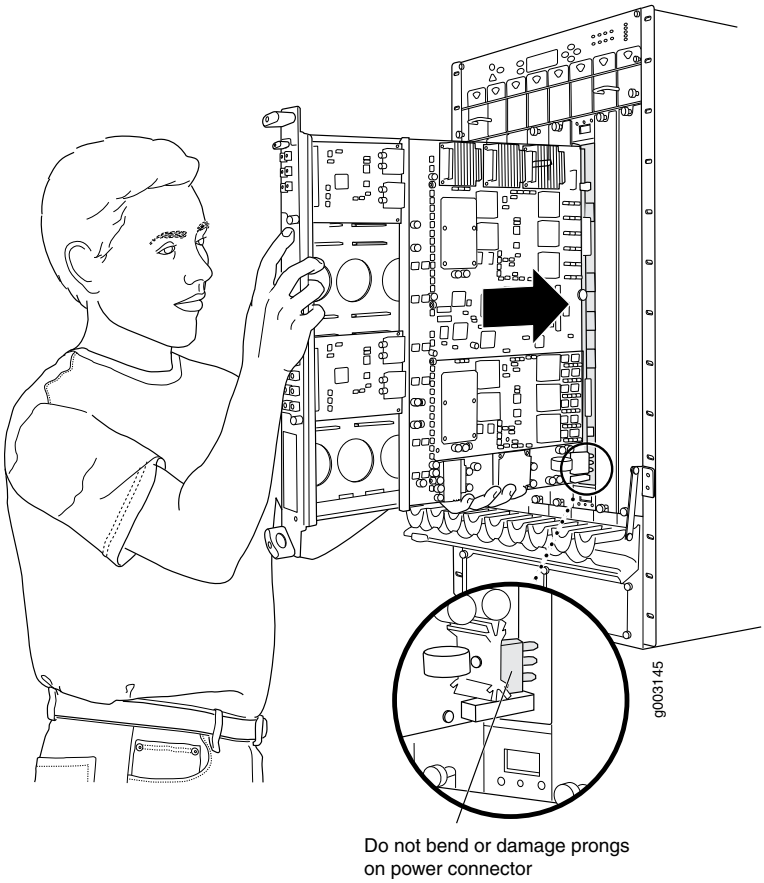

11. Gently rest the bottom edge of the FPC on the bottom edge of the slot opening, making contact a short distance forward of the power connector.

CAUTION: Take care not to bend or otherwise damage the power connector prongs.

12. Slowly slide the FPC all the way into the card cage until you feel resistance.

CAUTION: To avoid damaging the FPC, make sure that you keep the bottom of the FPC flat as you slide it into the slot.

13. Starting with the ejector handles on the FPC faceplate nearly horizontal, simultaneously turn both ejector handles clockwise to seat the FPC.

Copyright © 2019, Juniper Networks, Inc.

14. If you are installing a Type 2 FPC or Type 3 FPC, tighten the screws inside the ejector handles to secure the FPC. Do not overtighten them.

15. Remove the rubber safety cap from each fiber-optic transceiver and cable.

WARNING: **Do not look directly into the ends of fiber-optic cables or into the transceivers on the PIC faceplate. Fiber-optic transceivers and cable connected to transceivers emit laser light that can damage your eyes.**

16. Insert the appropriate cable into the cable connector ports on each PIC on the FPC. Secure the cables so that they are not supporting their own weight. Place excess cable out of the way in a neatly coiled loop, using the cable management system. Placing fasteners on a loop helps to maintain its shape.

CAUTION: **Do not let fiber-optic cable hang free from the connector. Do not allow fastened loops of cable to dangle, which stresses the cable at the fastening point.**

CAUTION: **Avoid bending fiber-optic cable beyond its minimum bend radius. An arc smaller than a few inches in diameter can damage the cable and cause problems that are difficult to diagnose.**

17. Use one of the following methods to bring the FPC online:

- Press and hold the FPC online/offline button until the green **OK** LED next to the button lights steadily, in about 5 seconds. The LEDs and online/offline button for each FPC are located directly above it on the craft interface.
- Issue the CLI command:

  `user@host>`**request chassis fpc slot** *`slot-number`* **online**

  For more information about the command, see *request chassis fpc*.

CAUTION: **After the OK LED lights steadily, wait at least 30 seconds before removing the FPC again, removing an FPC from a different slot, or inserting an FPC in a different slot.**

You can verify correct FPC and PIC functioning by issuing the **show chassis fpc** and **show chassis fpc pic-status** commands, as described in "Maintaining T640 FPCs" on page 470 and "Maintaining T640 PICs and PIC Cables" on page 476.

Copyright © 2019, Juniper Networks, Inc.

Figure 166: Installing a T640 FPC

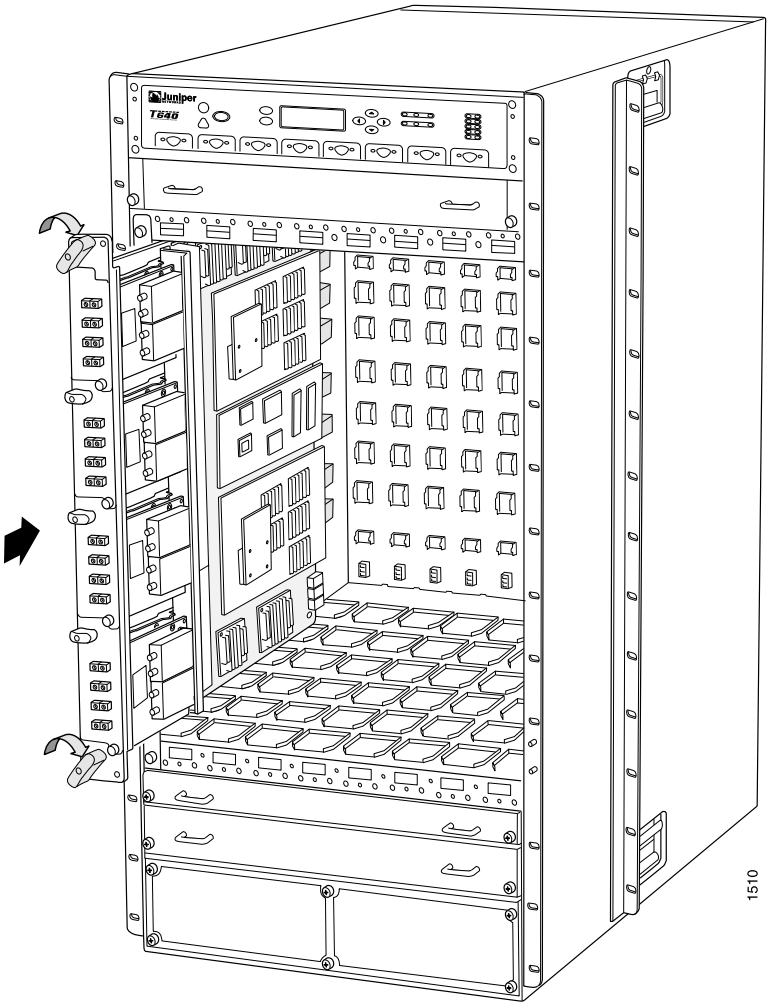

See Also

- T640 FPC Description on page 73
- Troubleshooting the T640 FPCs on page 496
- T640 Preventing Electrostatic Discharge Damage on page 528

Related Documentation

- T640 FPC Description on page 73
- Troubleshooting the T640 FPCs on page 496

Replacing a T640 PIC

1. Removing a T640 PIC on page 353
2. Installing a T640 PIC on page 355

Copyright © 2019, Juniper Networks, Inc.

Removing a T640 PIC

PICs are hot-insertable and hot-removable. When you remove a PIC, the router continues to function, although the PIC interfaces being removed no longer function.

The PICs are located in the FPCs installed in the front of the router. A PIC weighs less than 2 lb (0.9 kg).

To remove a PIC (see Figure 167 on page 355):

1. Place an electrostatic bag or antistatic mat on a flat, stable surface to receive the PIC. If the PIC connects to fiber-optic cable, have ready a rubber safety cap for each transceiver and cable.

2. Attach an electrostatic discharge ESD grounding strap to your bare wrist, and connect the strap to one of the ESD points on the chassis.

3. Use one of the following methods to take the PIC offline:

   - Press and hold the online/offline button until the PIC LED goes out (about 5 seconds).

     For a PIC installed in a Type 1 FPC, use a tool—such as a flat-blade screwdriver—to press the button slightly beneath the faceplate of the PIC. For a PIC installed in a Type 2 FPC or Type 3 FPC, use a narrow-ended tool that fits inside the opening that leads to the button.

   - Issue the following CLI command:

     `user@host>` **request chassis pic fpc-slot** *`fpc-slot`* **pic-slot** *`pic-slot`* **offline**

     For more information about the command, see *request chassis pic*.

4. Label the cables connected to the PIC so that you can later reconnect each cable to the correct PIC.

5. Disconnect the cables from the PIC. If the PIC uses fiber-optic cable, immediately cover each transceiver and the end of each cable with a rubber safety cap.

WARNING: **Do not look directly into a fiber-optic transceiver or into the ends of fiber-optic cables. Fiber-optic transceivers and fiber-optic cable connected to a transceiver emit laser light that can damage your eyes.**

CAUTION: **Do not leave a fiber-optic transceiver uncovered except when inserting or removing cable. The safety cap keeps the port clean and prevents accidental exposure to laser light.**

6. Arrange the cable in the cable management system to prevent it from dislodging or developing stress points. Secure the cable so that it is not supporting its own weight as it hangs to the floor. Place excess cable out of the way in a neatly coiled loop in the cable management system. Placing fasteners on the loop helps to maintain its shape.

   CAUTION: **Avoid bending fiber-optic cable beyond its minimum bend radius. An arc smaller than a few inches in diameter can damage the cable and cause problems that are difficult to diagnose.**

7. Unseat the PIC:
   - Type 1 or Type 2 PIC—Loosen the captive screws at the top and bottom of the PIC faceplate.
   - Type 3 PIC—Loosen the captive screw at the bottom of the PIC faceplate, then twist the ejector handle at the top of the faceplate and counterclockwise to unseat the PIC.
   - Type 4 PIC—Twist the ejector handle at the bottom of the PIC faceplate, then twist the ejector handle at the top of the faceplate and counterclockwise to unseat the PIC.
8. Slide the PIC out of the FPC card carrier, and place it in the electrostatic bag or on the antistatic mat.
9. If you are not reinstalling a PIC into the emptied PIC slot within a short time, install a blank PIC panel over the slot to maintain proper airflow in the FPC card cage.

Copyright © 2019, Juniper Networks, Inc.

Figure 167: Removing a PIC

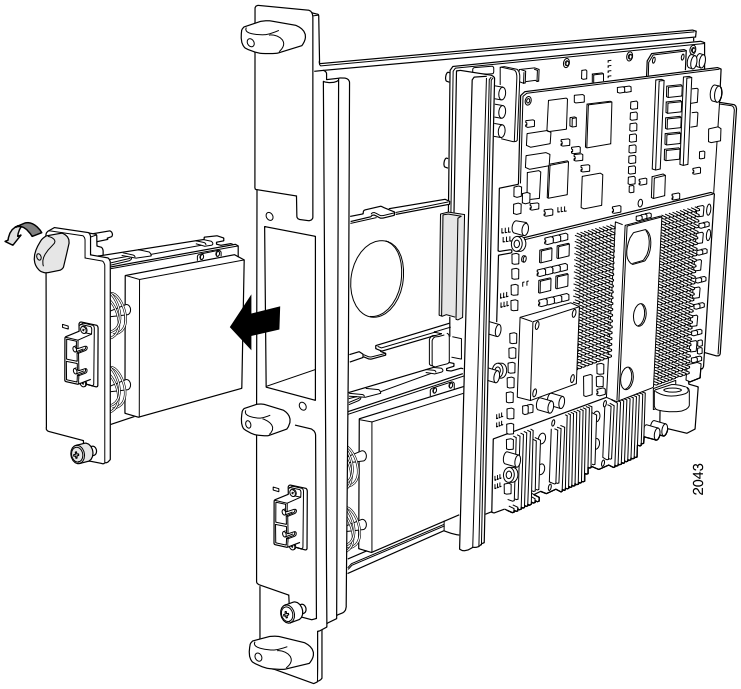

See Also

- T640 Preventing Electrostatic Discharge Damage on page 528
- T640 PIC Description on page 85
- Maintaining T640 PICs and PIC Cables on page 476
- Troubleshooting the T640 PICs on page 497

Installing a T640 PIC

To install a PIC (see Figure 168 on page 357):

1. Attach an electrostatic discharge (ESD) grounding strap to your bare wrist, and connect the strap to one of the ESD points on the chassis.

2. If the PIC uses fiber-optic cable, verify that there is a rubber safety cap over each transceiver on the faceplate. Install a cap if necessary.

3. Align the notches in the connector at the rear of the PIC with the notches in the PIC slot in the FPC and then slide the PIC in until it lodges firmly in the FPC.

CAUTION: **Slide the PIC straight into the slot to avoid damaging the components on the bottom of the PIC.**

4. Secure the PIC to the FPC faceplate:
   - Type 1 or Type 2 PICs—Tighten the captive screws at the top and bottom of the faceplate.
   - Type 3 PICs—Turn the ejector handle at the top of the PIC faceplate clockwise, then tighten the captive screw at the bottom of the faceplate.
   - Type 4 PIC—Twist the ejector handle at the bottom of the PIC faceplate, then twist the ejector handle at the top of the faceplate and counterclockwise to unseat the PIC.
5. If the PIC uses fiber-optic cable, remove the rubber safety cap from each transceiver and the end of each cable.

   WARNING: **Do not look directly into a fiber-optic transceiver or into the ends of fiber-optic cables. Fiber-optic transceivers and fiber-optic cable connected to a transceiver emit laser light that can damage your eyes.**

   CAUTION: **Do not leave a fiber-optic transceiver uncovered except when inserting or removing cable. The safety cap keeps the port clean and prevents accidental exposure to laser light.**

6. Insert the appropriate cables into the cable connectors on the PIC.
7. Arrange each cable in the cable management system to prevent the cable from dislodging or developing stress points. Secure the cable so that it is not supporting its own weight as it hangs to the floor. Place excess cable out of the way in a neatly coiled loop in the cable management system. Placing fasteners on the loop helps to maintain its shape.

   CAUTION: **Do not let fiber-optic cable hang free from the connector. Do not allow fastened loops of cable to dangle, which stresses the cable at the fastening point.**

   CAUTION: **Avoid bending fiber-optic cable beyond its minimum bend radius. An arc smaller than a few inches in diameter can damage the cable and cause problems that are difficult to diagnose.**

8. Use one of the following methods to bring the PIC online:
   - Press the PIC offline/online button until the PIC LED lights green. For a PIC installed in a Type 1 FPC, use a tool—such as a flat-blade screwdriver—to press the button

Copyright © 2019, Juniper Networks, Inc.

slightly beneath the faceplate of the PIC. For a PIC installed in a Type 2 FPC or Type 3 FPC, use a narrow-ended tool that fits inside the opening that leads to the button.

- Issue the following CLI command:

  `user@host>` **request chassis pic fpc-slot** *`fpc-slot`* **pic-slot** *`pic-slot`* **online**

  For more information about the command, see *request chassis pic*.

The normal functioning status LED confirms that the PIC is online. You can also verify correct PIC functioning by issuing the **show chassis fpc pic-status** command.

Figure 168: Installing a PIC

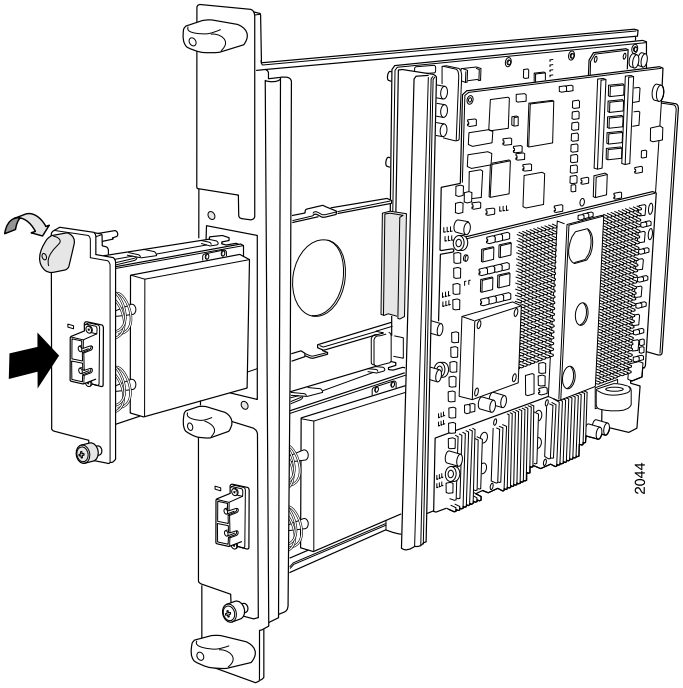

See Also

- T640 Preventing Electrostatic Discharge Damage on page 528
- T640 PIC Description on page 85
- Maintaining T640 PICs and PIC Cables on page 476
- Troubleshooting the T640 PICs on page 497

Related Documentation

- T640 Preventing Electrostatic Discharge Damage on page 528
- T640 PIC Description on page 85
- Maintaining T640 PICs and PIC Cables on page 476
- Troubleshooting the T640 PICs on page 497

Replacing T640 PIC Cables

Removing and installing PIC cables do not affect router function, except that a PIC does not receive or transmit data while its cable is disconnected. To replace a PIC cable, , perform the following procedures:

1. Removing a T640 PIC Cable on page 358
2. Installing a T640 PIC Cable on page 359

Removing a T640 PIC Cable

To remove a PIC cable:

1. If the PIC connects to fiber-optic cable, have ready a rubber safety cap for each cable and transceiver.

2. If removing all cables connected to the PIC, use one of the following methods to take the PIC offline:

   - Press its online/offline button. For a PIC installed in a Type 1 FPC, use a tool—such as a flat-blade screwdriver—to press the button slightly beneath the faceplate of the PIC. For a PIC installed in a Type 2 FPC or Type 3 FPC, use a narrow-ended tool that fits inside the opening that leads to the button. Press and hold the button until the PIC LED goes out (about 5 seconds).

   - Issue the CLI command:

     `user@host>` **request chassis pic fpc-slot** *`fpc-slot`* **pic-slot** *`pic-slot`* **offline**

     For more information about the command, see *request chassis pic*.

3. Unplug the cable from the cable connector port. If the PIC uses fiber-optic cable, immediately cover each transceiver and the end of each cable with a rubber safety cap.

   WARNING: **Do not look directly into the ends of fiber-optic cables or into the transceivers on the PIC faceplate. Fiber-optic transceivers and cable connected to transceivers emit laser light that can damage your eyes.**

   CAUTION: **Do not leave a fiber-optic transceiver uncovered except when inserting or removing cable. The safety cap keeps the port clean and prevents accidental exposure to laser light.**

4. Remove the cable from the cable management system and detach it from the destination port.

Copyright © 2019, Juniper Networks, Inc.

See Also

- T640 Preventing Electrostatic Discharge Damage on page 528
- T640 PIC Description on page 85
- Connecting PIC Cables to the T640 Router on page 225
- Maintaining T640 PICs and PIC Cables on page 476

Installing a T640 PIC Cable

To install a PIC cable (see Figure 169 on page 360):

1. Have ready a length of the type of cable used by the PIC. For cable specifications, see the *T640 Core Router Interface Module Reference*.

2. If the PIC cable connector port is covered by a rubber safety plug, remove the plug.

   WARNING: **Do not look directly into the ends of fiber-optic cables or into the transceivers on the PIC faceplate. Fiber-optic transceivers and cable connected to transceivers emit laser light that can damage your eyes.**

   CAUTION: **Do not leave a fiber-optic transceiver uncovered except when inserting or removing cable. The safety cap keeps the port clean and prevents accidental exposure to laser light.**

3. Insert the cable connector into the cable connector port on the PIC faceplate.

4. Arrange the cable in the cable management system, to prevent it from dislodging or developing stress points. Secure the cable so that it is not supporting its own weight as it hangs to the floor. Place excess cable out of the way in a neatly coiled loop in the cable management system. Placing fasteners on the loop helps to maintain its shape.

   CAUTION: **Avoid bending fiber-optic cable beyond its minimum bend radius. An arc smaller than a few inches in diameter can damage the cable and cause problems that are difficult to diagnose.**

   CAUTION: **Do not let fiber-optic cable hang free from the connector. Do not allow fastened loops of cable to dangle, which stresses the cable at the fastening point.**

5. Insert the other end of the cable into the destination port.

6. Repeat the previous steps for any additional cables.

7. If the PIC is offline (its failure indicator LED is lit), use one of the following methods to bring the PIC online:

   - Press the PIC offline/online button until the PIC LED lights green. For a PIC installed in a Type 1 FPC, use a tool—such as a flat-blade screwdriver—to press the button slightly beneath the faceplate of the PIC. For a PIC installed in a Type 2 FPC or Type 3 FPC, use a narrow-ended tool that fits inside the opening that leads to the button.
   - Issue the CLI command:

     `user@host>`**request chassis pic fpc-slot** *`fpc-slot`* **pic-slot** *`pic-slot`* **online**

     For more information about the command, see *request chassis pic*.

   The normal functioning indicator LED confirms that the PIC is online. You can also verify correct PIC functioning by issuing the **show chassis fpc pic-status** command described in "Maintaining T640 PICs and PIC Cables" on page 476.

Figure 169: Connecting Fiber-Optic Cable to a PIC

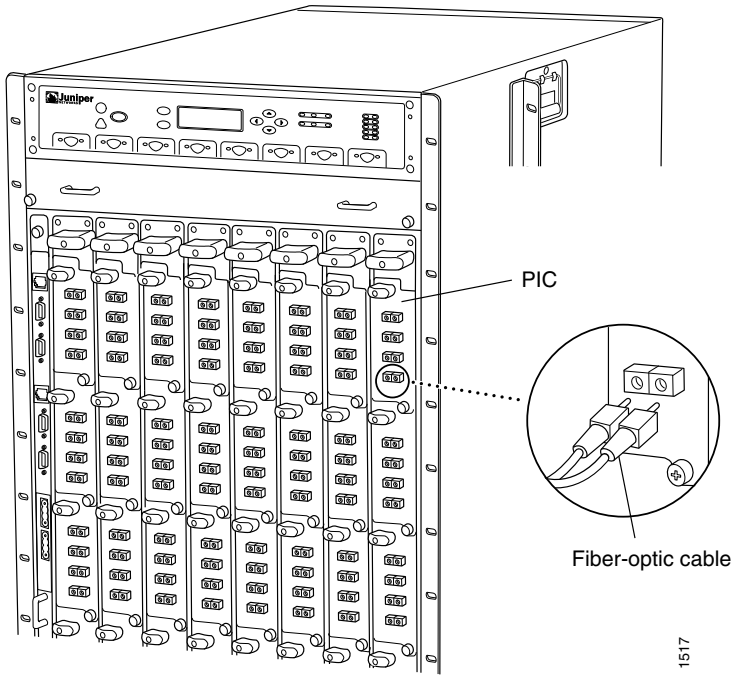

See Also

- T640 PIC Description on page 85
- Connecting PIC Cables to the T640 Router on page 225
- Troubleshooting the T640 PICs on page 497

Copyright © 2019, Juniper Networks, Inc.

Related Documentation

- T640 PIC Description on page 85
- Connecting PIC Cables to the T640 Router on page 225
- Troubleshooting the T640 PICs on page 497

Copyright © 2019, Juniper Networks, Inc.

Copyright © 2019, Juniper Networks, Inc.

CHAPTER 29

Replacing Power System Components

- Replacing a T640 Two-Input 160-A DC Power Supply on page 363
- Replacing a T640 Three-Input 240-A DC Power Supply on page 370
- Replacing a T640 Four-Input 240-A DC Power Supply on page 382
- Replacing a T640 DC Power Supply Cable on a Two-Input 160-A Power Supply, Three-Input 240-A DC Power Supply, or a Four-Input 240-A DC Power Supply on page 388
- Replacing a T640 Six-Input DC Power Supply on page 395
- Replacing a T640 DC Power Supply Cable on a Six-Input DC Power Supply on page 401
- Replacing a T640 Six-Input DC Power Supply Front Air Filter on page 404
- Replacing a T640 Six-Input DC Power Supply Side Air Filter on page 404
- Replacing a Front Air Filter Element on a T640 AC or DC Power Supply on page 406
- Replacing a Side Air Filter on a T640 AC Power Supply on page 408
- Replacing a T640 Three-Phase Delta AC Power Supply on page 412
- Replacing a T640 Three-Phase Delta AC Power Supply Cord on page 420
- Replacing a T640 Three-Phase Wye AC Power Supply on page 426
- Replacing a T640 Three-Phase Wye AC Power Supply Cord on page 433

Replacing a T640 Two-Input 160-A DC Power Supply

1. Removing a T640 Two-Input 160-A DC Power Supply on page 363
2. Installing a T640 Two-Input DC Power Supply on page 366

Removing a T640 Two-Input 160-A DC Power Supply

CAUTION: **Do not leave a power supply slot empty for more than 30 minutes while the router is operational. For proper airflow, the power supply must remain in the chassis, or a blank panel must be used in an empty slot.**

The router has either one nonredundant power supply or two redundant, load-sharing power supplies. Each redundant power supply is hot-insertable and hot-removable. When a redundant power supply is powered down or removed, the other power supply

automatically assumes the entire electrical load for the router. If you have only one power supply, you must power off the system before removing the power supply.

To remove a two-input 160-A DC power supply:

1. Make sure that the voltage across the DC power source cable leads is 0 V and that there is no chance that the cables might become active during the removal process.

2. For a nonredundant power supply, power off the system. For redundant power supplies, verify that the other power supply is functional.

3. Attach an electrostatic discharge (ESD) grounding strap to your bare wrist, and connect the strap to one of the ESD points on the chassis.

4. Switch the circuit breakers on the power supply faceplate to the off position (**O**).

   NOTE: **After powering off a power supply, you must wait at least 60 seconds before turning it back on.**

5. Remove the clear plastic cover protecting the terminal studs on the faceplate.

6. Using a 7/16-in. (11 mm) nut driver, remove the nuts and washers from the terminal studs (see Figure 170 on page 364).

Figure 170: Disconnecting Power Cables from a Two-Input 160-A DC Power Supply

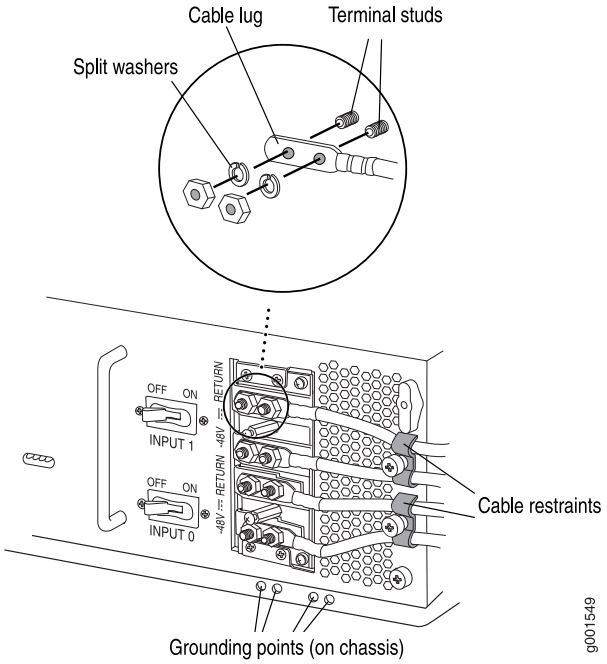

Copyright © 2019, Juniper Networks, Inc.

CAUTION: You must ensure that power connections maintain the proper polarity. The power source cables might be labeled (+) and (–) to indicate their polarity. There is no standard color coding for DC power cables. The color coding used by the external DC power source at your site determines the color coding for the leads on the power cables that attach to the terminal studs on each power supply.

7. Remove the cable lugs from the terminal studs.

8. Loosen the captive screws on the cable restraints on the right edge of the power supply faceplate.

9. Carefully move the power cables out of the way.

10. Loosen the captive screws on the lower corners of the power supply faceplate completely. Twist the ejector handles on the upper corners of the faceplate counterclockwise to unseat the power supply.

11. Twist the ejector handles on the upper corners of the faceplate counterclockwise to unseat the power supply.

12. Grasp the handle on the power supply faceplate, and pull firmly to start removing the power supply. Slide it halfway out of the chassis (see Figure 171 on page 366).

    CAUTION: Each two-input 160-A power supply weighs approximately 23 lb (10.5 kg). Be prepared to support the full weight of the power supply as you remove it from the router.

13. Place one hand underneath the power supply to support it, and slide it completely out of the chassis.

    WARNING: Do not touch the power connectors on the rear of the power supply (see Figure 172 on page 366). They can contain dangerous voltages.

Figure 171: Removing a Two-Input 160-A Power Supply

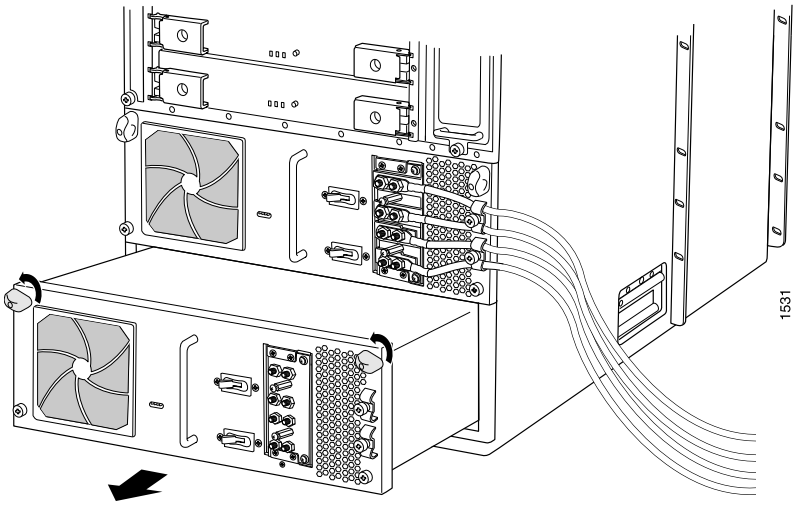

Figure 172: Rear of the Power Supply Showing Midplane Connectors

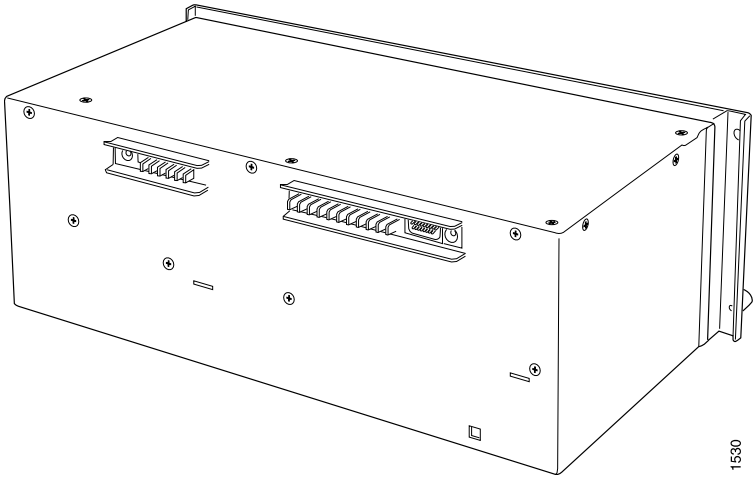

See Also

- T640 Power System Description on page 103
- Powering Off the T640 Router on page 256
- T640 DC Power Supply Electrical Specifications on page 134
- Maintaining the T640 Power Supplies on page 477
- Site Electrical Wiring Guidelines for Juniper Networks Devices on page 560

Installing a T640 Two-Input DC Power Supply

To install a power supply (see Figure 173 on page 369):

Copyright © 2019, Juniper Networks, Inc.

1. Make sure that the voltage across the DC power source cable leads is 0 V and that there is no chance that the cables might become active during installation.

   CAUTION: **You must ensure that power connections maintain the proper polarity. The power source cables might be labeled (+) and (–) to indicate their polarity. There is no standard color coding for DC power cables. The color coding used by the external DC power source at your site determines the color coding for the leads on the power cables that attach to the terminal studs on each power supply.**

2. Attach an electrostatic discharge (ESD) grounding strap to your bare wrist, and connect the strap to one of the ESD points on the chassis.

3. Switch the circuit breakers on the power supply faceplate to the off position (**O**).

4. Using both hands, slide the power supply into the chassis until you feel resistance.

5. Twist the ejector handles at the upper corners of the power supply faceplate clockwise until they stop.

6. Tighten the captive screws at the lower corners of the power supply faceplate to secure the power supply in the chassis.

7. Remove the clear plastic cover protecting the terminal studs on the faceplate.

8. Remove the nut and washer from each power terminal stud. If no washers and nuts are already installed, they should be in the accessory box.

9. Secure the cable lug on the DC power cable to the terminal stud, first with a washer, then with a nut (see Figure 174 on page 370). Use a 7/16-in. (11 mm) nut driver or wrench to tighten the nut (see Figure 173 on page 369). Apply between 23 lb-in. (2.6 Nm) and 25 lb-in. (2.8 Nm) of torque to each nut:

   a. Secure each positive (+) DC source power cable lug to a **RTN** (return) terminal.

   b. Secure each negative (–) DC source power cable lug to a **–48V** (input) terminal.

   NOTE: **All inputs on the two-input 160-A DC power supply in slot PEM0 must be powered by dedicated power feeds derived from feed A, and all inputs on the two-input 160-A DC power supply in slot PEM1 must be powered by dedicated power feeds derived from feed B. This configuration provides the commonly deployed A/B feed redundancy for the system.**

NOTE: **INPUT 0** and **INPUT 1** on the three-input 240-A DC power supply in slot **PEM0** must be powered by dedicated power feeds derived from feed A, and **INPUT 0** and **INPUT 1** on the three-input 240-A DC power supply in slot **PEM1** must be powered by dedicated power feeds derived from feed B. This configuration provides the commonly deployed A/B feed redundancy for the system.

CAUTION: You must ensure that power connections maintain the proper polarity. The power source cables might be labeled **(+)** and **(–)** to indicate their polarity. There is no standard color coding for DC power cables. The color coding used by the external DC power source at your site determines the color coding for the leads on the power cables that attach to the terminal studs on each power supply.

10. Loosen the captive screws on the cable restraints on the right edge of the power supply faceplate.

11. Route the positive and negative DC power cables through the top and bottom of each cable restraint.

12. Tighten the cable restraint captive screws to hold the power cables in place.

13. Verify that the power cabling is correct, that the cables are not touching or blocking access to router components, and that they do not drape where people could trip on them.

14. Replace the clear plastic cover over the terminal studs on the faceplate.

15. Switch the circuit breakers on the power supply to the on position (**|**).

    NOTE: If you have only one power supply, or if the router is completely powered off when you power on the power supply, the Routing Engine boots as the power supply completes its startup sequence.

16. Check the LEDs on the power supply faceplate. If the power supply is correctly installed and is functioning properly, the **DC OK** LED lights steadily, and the **CB ON** LED blinks momentarily, then lights steadily.

Copyright © 2019, Juniper Networks, Inc.

NOTE: After a power supply is powered on, it can take up to 60 seconds for status indicators—such as the output status LEDs on the power supply, the command output displays, and messages on the LCD on the craft interface—to indicate that the power supply is functioning normally. Ignore error indicators that appear during the first 60 seconds.

NOTE: After powering on a power supply, wait at least 60 seconds before turning it off. If you have only one power supply, power off the system before turning off the power supply.

Figure 173: Installing a Replacement Two-Input 160-A DC Power Supply

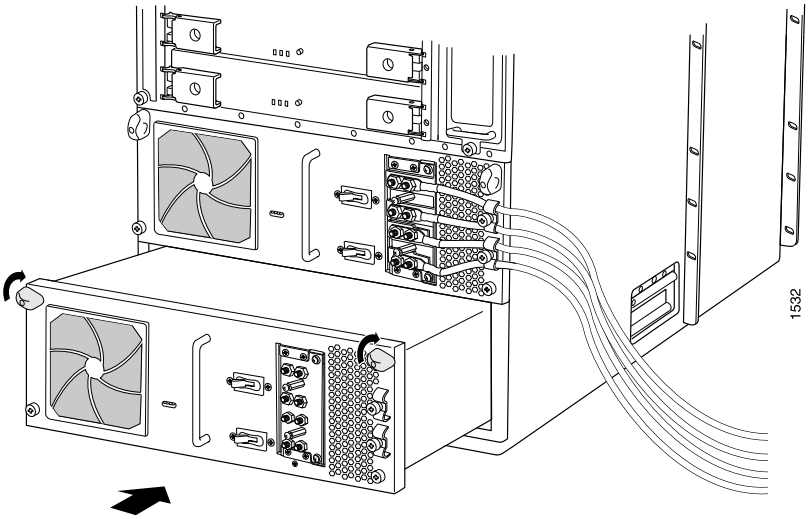

Figure 174: Connecting Power Cables to a Two-Input 160-A DC Power Supply

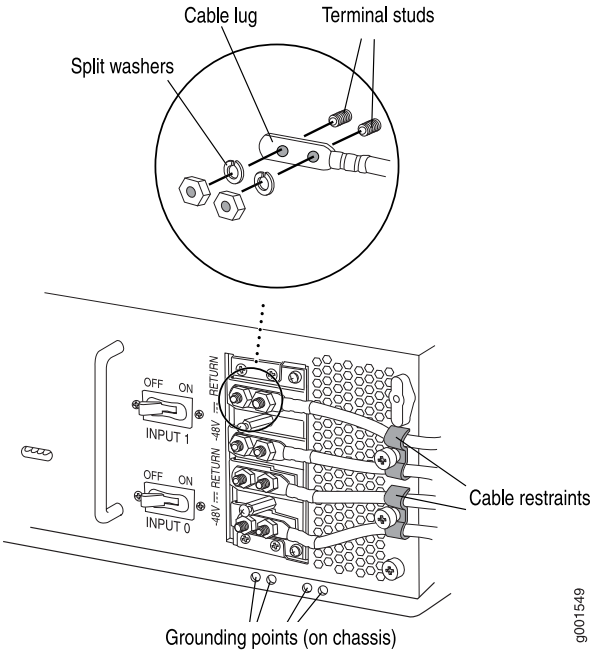

See Also

- T640 Power System Description on page 103
- Powering Off the T640 Router on page 256.
- T640 DC Power Supply Electrical Specifications on page 134
- Maintaining the T640 Power Supplies on page 477
- T640 Preventing Electrostatic Discharge Damage on page 528.
- Site Electrical Wiring Guidelines for Juniper Networks Devices on page 560

Related Documentation

- T640 Power System Description on page 103
- Maintaining the T640 Power Supplies on page 477
- T640 DC Power Supply Electrical Specifications on page 134
- Site Electrical Wiring Guidelines for Juniper Networks Devices on page 560

Replacing a T640 Three-Input 240-A DC Power Supply

The T640 router has either one nonredundant power supply or two redundant, load-sharing power supplies. Each redundant power supply is hot-insertable and hot-removable. When a redundant power supply is powered down or removed, the other

Copyright © 2019, Juniper Networks, Inc.

power supply automatically assumes the entire electrical load for the router. If you have only one power supply, you must power off the system before removing the power supply.

1. Removing a T640 Three-Input 240-A DC Power Supply on page 371
2. Setting the Input Mode Switch on a Three-Input 240-A DC Power Supply for a T640 Router on page 374
3. Installing a T640 Three-Input 240-A DC Power Supply on page 375
4. Replacing the T640 Cable Restraint on a Three-Input 240-A DC Power Supply on page 376
5. Connecting DC Power to a Three-Input 240-A DC Power Supply in a T640 Router on page 378
6. Powering On a T640 Replacement Three-Input 240-A DC Power Supply on page 380

Removing a T640 Three-Input 240-A DC Power Supply

To remove a three-input 240-A DC power supply:

1. Switch off the external circuit breakers to the power supply being removed. Make sure that the voltage across the DC power source cable leads is 0 V and that there is no chance that the cables might become active during the removal process.

2. Attach an electrostatic discharge (ESD) grounding strap to your bare wrist, and connect the strap to one of the ESD points on the chassis.

3. Switch the circuit breakers on the power supply faceplate to the off position (**O**).

   NOTE: **After powering off a power supply, wait at least 60 seconds before turning it back on.**

4. Remove the clear plastic cover protecting the terminal studs on the faceplate.

5. Using a 7/16-in. (11 mm) nut driver or wrench, remove the nuts and washers from the terminal studs (see Figure 175 on page 372).

   CAUTION: **You must ensure that power connections maintain the proper polarity. The power source cables might be labeled (+) and (–) to indicate their polarity. There is no standard color coding for DC power cables. The color coding used by the external DC power source at your site determines the color coding for the leads on the power cables that attach to the terminal studs on each power supply.**

Copyright © 2019, Juniper Networks, Inc.

Figure 175: Disconnecting Power Cables from the DC Power Supply

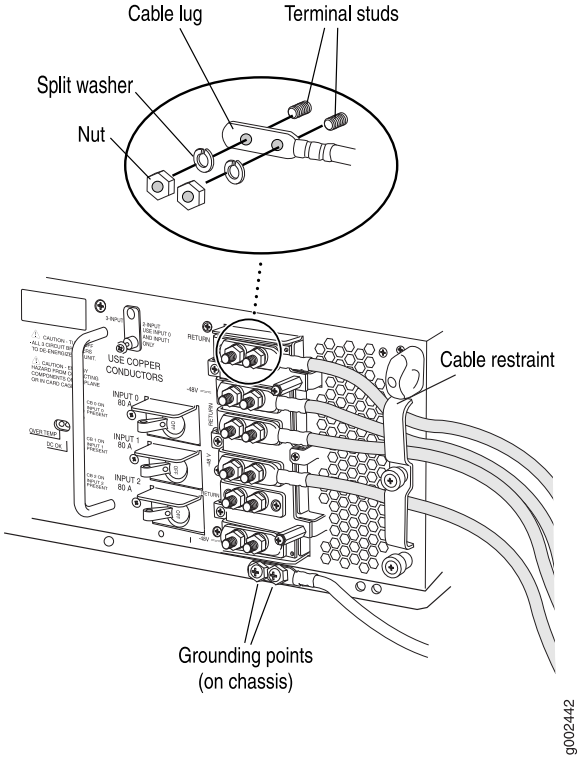

6. Remove the cable lugs from the terminal studs.

7. Loosen the captive screw or screws on the cable restraint on the right edge of the power supply faceplate.

8. Carefully move the power cables out of the way.

9. Loosen the captive screws on the lower corners of the power supply faceplate completely.

10. Twist the ejector handles on the upper corners of the faceplate counterclockwise to unseat the power supply.

11. Grasp the handle on the power supply faceplate and pull firmly. Slide it halfway out of the chassis (see Figure 177 on page 373).

Copyright © 2019, Juniper Networks, Inc.

CAUTION: Each three-input 240-A DC power supply weighs approximately 25 lb (11.3 kg). Be prepared to support the full weight of the power supply as you remove it from the router.

12. Place one hand underneath the power supply to support it, and slide it completely out of the chassis.

WARNING: Do not touch the power connectors on the rear of the power supply (see Figure 176 on page 373). They can contain dangerous voltages.

Figure 176: Rear of the Power Supply Showing Midplane Connectors

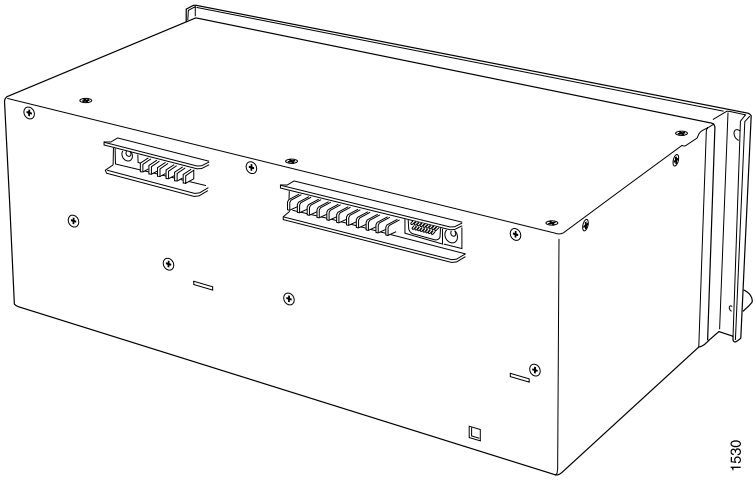

Figure 177: Removing a Three-Input 240-A DC Power Supply

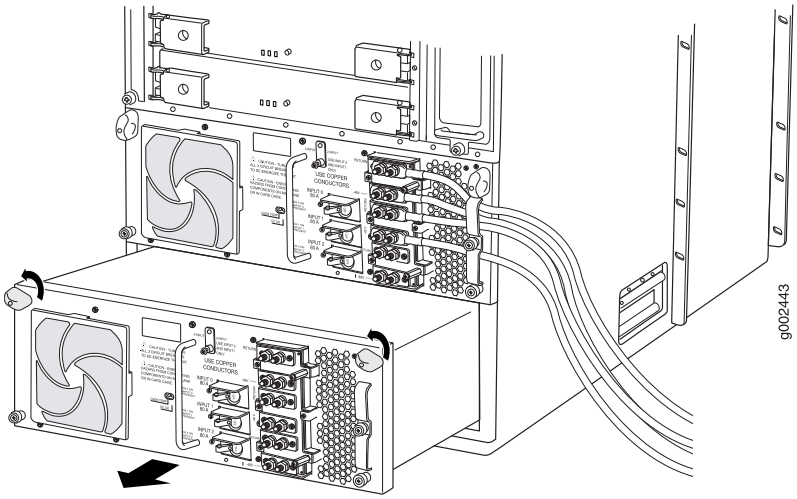

See Also

- T640 Power System Description on page 103
- Maintaining the T640 Power Supplies on page 477
- T640 Preventing Electrostatic Discharge Damage on page 528.
- T640 DC Power Supply Electrical Specifications on page 134
- Site Electrical Wiring Guidelines for Juniper Networks Devices on page 560

Setting the Input Mode Switch on a Three-Input 240-A DC Power Supply for a T640 Router

NOTE: **Do not set the input mode switch if the power supply is installed in the chassis. If the power supply is already installed, you must disconnect all cables and remove the power supply before setting the input mode switch.**

To set the input mode switch (see Figure 178 on page 375) to **2-INPUT** mode:

1. Using a screwdriver, loosen the captive screw holding the metal cover over the input mode switch (see Figure 178 on page 375).
2. Rotate the metal cover away from the input mode switch to expose the switch.
3. Check the setting of the input mode switch. Use a flashlight, if necessary. In **2-INPUT** mode, the switch must be located all the way to the right.
4. If the input mode switch is not set correctly, use a sharp, nonconductive object to slide the switch all the way to the right to set the power supply to **2-INPUT**.

   CAUTION: **Do not use a pencil, because fragments can break off and cause damage to the power supply.**

5. Rotate the metal cover over the input mode switch, and use a screwdriver to tighten the captive screw.

Copyright © 2019, Juniper Networks, Inc.

Figure 178: Three-Input 240-A DC Power Supply

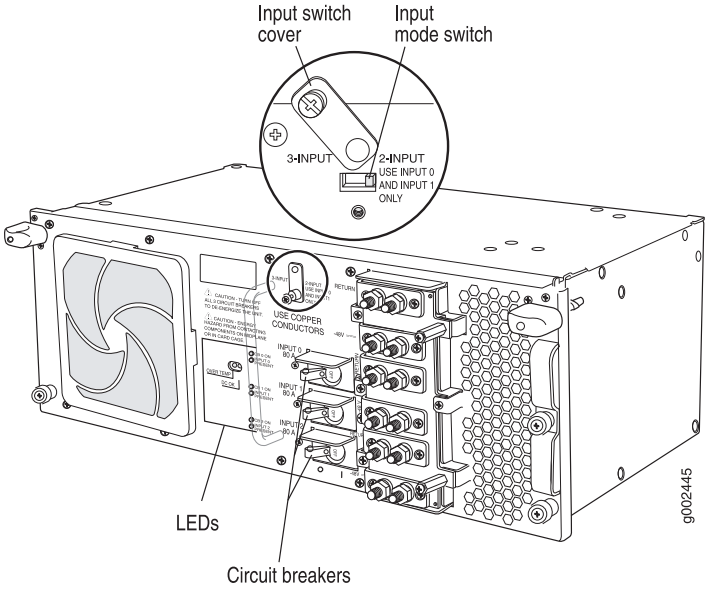

See Also

- T640 Power System Description on page 103
- Maintaining the T640 Power Supplies on page 477
- T640 DC Power Supply Electrical Specifications on page 134
- Site Electrical Wiring Guidelines for Juniper Networks Devices on page 560

Installing a T640 Three-Input 240-A DC Power Supply

Each three-input 240-A DC power supply weighs approximately 25 lb (11.3 kg). To install a three-input 240-A power supply:

1. Make sure that the voltage across the DC power source cable leads is 0 V and that there is no chance that the cables might become active during installation.

2. Attach an electrostatic discharge (ESD) grounding strap to your bare wrist, and connect the strap to one of the ESD points on the chassis.

3. Switch the circuit breakers on the power supply faceplate to the **OFF** position (**O**).

4. Using both hands, slide the power supply into the chassis until you feel resistance (see Figure 179 on page 376).

5. Twist the ejector handles at the upper corners of the power supply faceplate clockwise until they stop.

6. Tighten the captive screws at the lower corners of the power supply faceplate to secure the power supply in the chassis.

Copyright © 2019, Juniper Networks, Inc.

Figure 179: Installing a Three-Input 240-A DC Power Supply

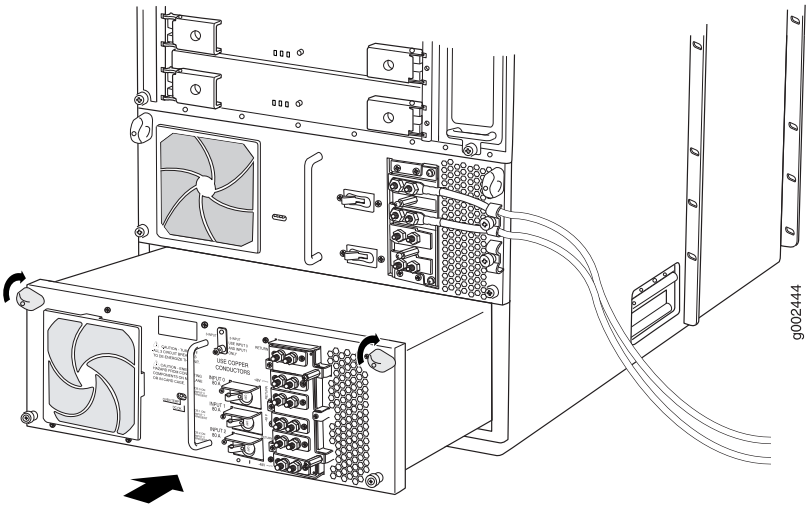

See Also

- T640 Power System Description on page 103
- Maintaining the T640 Power Supplies on page 477
- T640 Preventing Electrostatic Discharge Damage on page 528.
- T640 DC Power Supply Electrical Specifications on page 134
- Site Electrical Wiring Guidelines for Juniper Networks Devices on page 560

Replacing the T640 Cable Restraint on a Three-Input 240-A DC Power Supply

Each three-input 240-A DC power supply is shipped with the standard cable restraint, as shown in "Standard Cable Restraint on a Three-Input 240-A Power Supply" on page 377. Two optional cable restraints are shipped in the accessory box.

If your DC power cables are too large or inflexible to fit into the standard cable restraint, we recommend that you remove the standard cable restraint and install the optional cable restraint (see "Optional Cable Restraint on a Three-Input 240-A Power Supply" on page 378) on each three-input 240-A DC power supply.

NOTE: **Before you remove a chassis from a rack or cabinet, you must remove the optional cable restraint from the three-input 240-A DC power supply.**

To replace the cable restraint on a three-input 240-A DC power supply, perform the following tasks:

- Removing the T640 Standard Cable Restraint from a Three-Input 240-A DC Power Supply on page 377
- Installing the T640 Optional Cable Restraint on a Three-Input 240-A DC Power Supply on page 377

Copyright © 2019, Juniper Networks, Inc.

Removing the T640 Standard Cable Restraint from a Three-Input 240-A DC Power Supply

The cable restraint is located on the right edge of the power supply faceplate. To remove the standard cable restraint from a three-input 240-A DC power supply:

1. Loosen the captive screw on the standard cable restraint or captive screws on the optional cable restraint.

2. Remove the cable restraint from the power supply.

Figure 180: Standard Cable Restraint on a Three-Input 240-A DC Power Supply

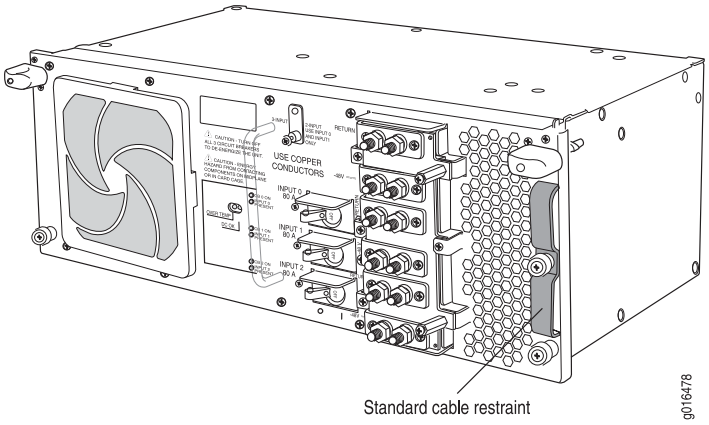

See Also

- T640 Power System Description on page 103
- Maintaining the T640 Power Supplies on page 477
- T640 DC Power Supply Electrical Specifications on page 134
- Site Electrical Wiring Guidelines for Juniper Networks Devices on page 560

Installing the T640 Optional Cable Restraint on a Three-Input 240-A DC Power Supply

To install the optional cable restraint on a three-input 240-A DC power supply:

1. Align the two captive screws on the optional cable restraint with the two threaded holes located at the right edge of the power supply faceplate.

2. Fasten the captive screws.

Figure 181: Optional Cable Restraint on a Three-Input 240-A DC Power Supply

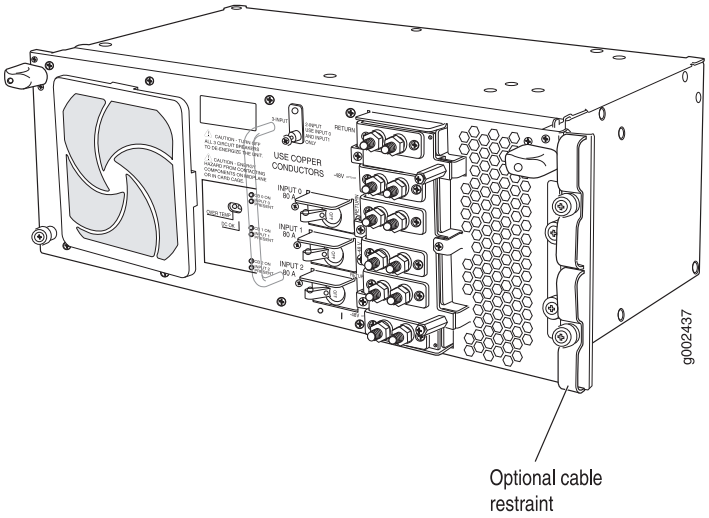

See Also

- T640 Power System Description on page 103
- Maintaining the T640 Power Supplies on page 477
- T640 DC Power Supply Electrical Specifications on page 134
- Site Electrical Wiring Guidelines for Juniper Networks Devices on page 560

Related Documentation

- T640 Power System Description on page 103
- Maintaining the T640 Power Supplies on page 477
- T640 DC Power Supply Electrical Specifications on page 134
- Site Electrical Wiring Guidelines for Juniper Networks Devices on page 560

Connecting DC Power to a Three-Input 240-A DC Power Supply in a T640 Router

To connect a three-input 240-A DC power supply to the power sources:

1. Attach an electrostatic discharge (ESD) grounding strap to your bare wrist, and connect the strap to one of the ESD points on the chassis.

2. Verify that a licensed electrician has attached cable lugs to the power cables that you supply.

3. Verify that the voltage across the DC power source cables leads is 0 V and that there is no chance that the cables might become active during installation. If needed, switch off the customer site circuit breakers.

4. Verify that the circuit breakers on the power supply faceplate are in the **OFF** position (**O**).

Copyright © 2019, Juniper Networks, Inc.

5. Remove the clear plastic cover protecting the terminal studs on the faceplate.

6. Remove the nut and washer from each power terminal stud.

   CAUTION: You must ensure that power connections maintain the proper polarity. The power source cables might be labeled (+) and (–) to indicate their polarity. There is no standard color coding for DC power cables. The color coding used by the external DC power source at your site determines the color coding for the leads on the power cables that attach to the terminal studs on each power supply.

7. Secure the cable lugs to the terminal studs, first with a washer, then with a nut (see Figure 182 on page 380).

   a. Attach the positive (+) DC source power cable lugs to the **RETURN** (return) terminals.

   b. Attach the negative (–) DC source power cable lugs to the **–48V** (input) terminals.

   Use a 7/16-in. (11 mm) nut driver or wrench to tighten the nut. Apply between 23 lb-in. (2.6 Nm) and 25 lb-in. (2.8 Nm) of torque to each nut.

   NOTE: For power supplies set to **2-INPUT** mode (required for the T640 router and TX Matrix router), connect two DC power cables, one for RETURN and one for –48 V to **INPUT 0** and two DC power cables, one for RETURN and one for –48 V to **INPUT 1**.

   NOTE: **INPUT 0** and **INPUT 1** on the three-input 240-A DC power supply in slot **PEM0** must be powered by dedicated power feeds derived from feed A, and **INPUT 0** and **INPUT 1** on the three-input 240-A DC power supply in slot **PEM1** must be powered by dedicated power feeds derived from feed B. This configuration provides the commonly deployed A/B feed redundancy for the system.

8. Loosen the captive screw or screws on the cable restraint on the right edge of the power supply faceplate.

9. Route the DC power cables through the cable restraint.

10. Tighten the cable restraint captive screw or screws to hold the power cables in place.

Copyright © 2019, Juniper Networks, Inc.

11. Verify that the power cabling is correct, that the power cables are not touching or blocking access to other hardware components, and that they do not drape where people could trip on them.

12. Replace the clear plastic cover over the terminal studs on the faceplate.

Figure 182: Connecting Power Cables to the Power Supply

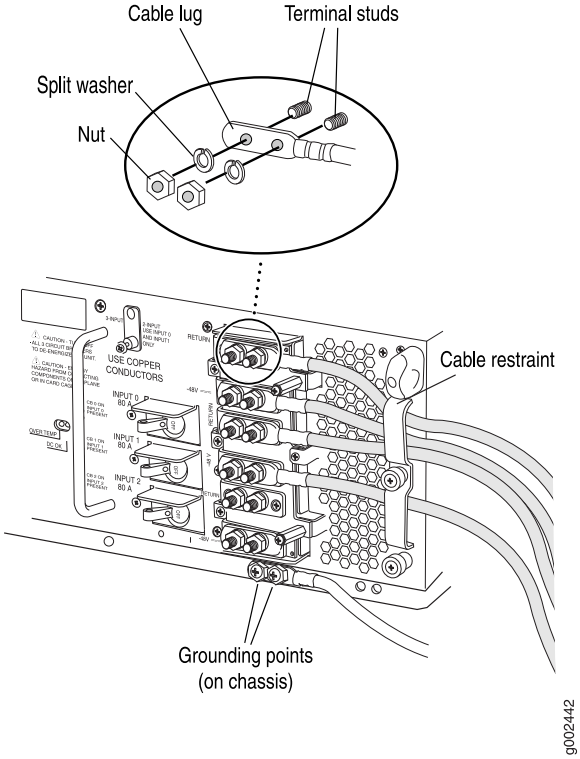

See Also

- T640 Power System Description on page 103
- Maintaining the T640 Power Supplies on page 477
- T640 DC Power Supply Electrical Specifications on page 134
- Site Electrical Wiring Guidelines for Juniper Networks Devices on page 560

Powering On a T640 Replacement Three-Input 240-A DC Power Supply

To power on a three-input 240-A DC power supply:

1. Attach an electrostatic discharge (ESD) grounding strap to your bare wrist, and connect the strap to one of the ESD points on the chassis.

2. Switch on the customer site circuit breakers to provide voltage to the DC power source cables.

Copyright © 2019, Juniper Networks, Inc.

3. Verify that the **INPUT PRESENT** LEDs on the power supply faceplate are lit steadily, indicating that the inputs are receiving power.

4. Switch the circuit breakers on the power supply to the **ON** position (**|**).

   NOTE: After a power supply is powered on, it can take up to 60 seconds for status indicators—such as the LEDs on the power supply, the command output displays , and messages on the LED display on the craft interface—to indicate that the power supply is functioning normally. Ignore error indicators that appear during the first 60 seconds.

5. Verify that the **CB ON** LEDs on the power supply faceplate are lit steadily. The **CB ON** LEDs blink momentarily, then light steadily to indicate that the circuit breakers are on.

6. Verify that the **DC OK** LED on the power supply faceplate is lit steadily, indicating that the power supply is correctly installed and is functioning properly.

   NOTE: After powering on a power supply, wait at least 60 seconds before turning it off. If the system is completely powered off when you power on the power supply, the Routing Engine boots as the power supply completes its startup sequence. If the Routing Engine finishes booting and you need to power off the system again, first issue the CLI request system halt command.

   After powering off a power supply, wait at least 60 seconds before turning it back on.

See Also

- T640 Power System Description on page 103
- Maintaining the T640 Power Supplies on page 477
- T640 Preventing Electrostatic Discharge Damage on page 528.
- T640 DC Power Supply Electrical Specifications on page 134
- Site Electrical Wiring Guidelines for Juniper Networks Devices on page 560

Related Documentation

- T640 Power System Description on page 103
- Maintaining the T640 Power Supplies on page 477
- T640 DC Power Supply Electrical Specifications on page 134
- Site Electrical Wiring Guidelines for Juniper Networks Devices on page 560

Copyright © 2019, Juniper Networks, Inc.

Replacing a T640 Four-Input 240-A DC Power Supply

The router has either one nonredundant power supply or two redundant, load-sharing power supplies. Each redundant power supply is hot-insertable and hot-removable. When a redundant power supply is powered down or removed, the other power supply automatically assumes the entire electrical load for the router. If you have only one power supply, you must power off the system before removing the power supply.

1. Removing a T640 Four-Input 240-A DC Power Supply on page 382
2. Installing a T640 Four-Input 240-A DC Power Supply on page 385

Removing a T640 Four-Input 240-A DC Power Supply

To remove a four-input 240-A DC power supply:

1. Switch off the customer site circuit breakers to the power supply being removed. Make sure that the voltage across the DC power source cable leads is 0 V and that there is no chance that the cables might become active during the removal process.

2. Attach an electrostatic discharge (ESD) grounding strap to your bare wrist, and connect the strap to one of the ESD points on the chassis.

3. Switch the circuit breakers on the power supply faceplate to the off position (**O**).

Figure 183: Four-Input 240-A DC Power Supply

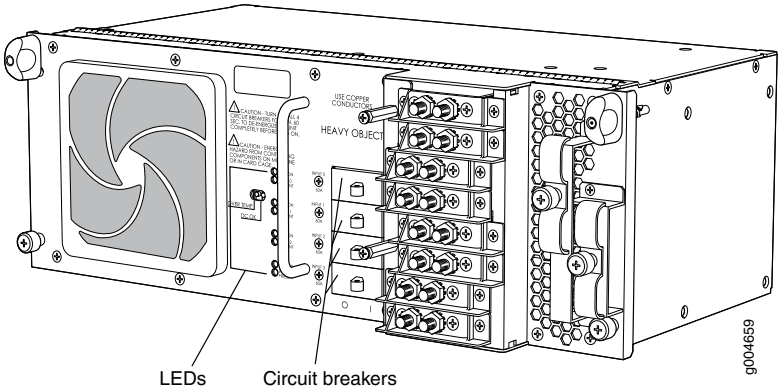

NOTE: **After powering off a power supply, wait at least 60 seconds before turning it back on.**

4. Remove the clear plastic cover protecting the terminal studs on the faceplate.

5. Using a 7/16-in. (11 mm) nut driver, remove the nuts and washers from the terminal studs (see Figure 184 on page 383).

Copyright © 2019, Juniper Networks, Inc.

CAUTION: You must ensure that power connections maintain the proper polarity. The power source cables might be labeled (+) and (–) to indicate their polarity. There is no standard color coding for DC power cables. The color coding used by the external DC power source at your site determines the color coding for the leads on the power cables that attach to the terminal studs on each power supply.

Figure 184: Disconnecting Power Cables from the Four-Input 240-A DC Power Supply

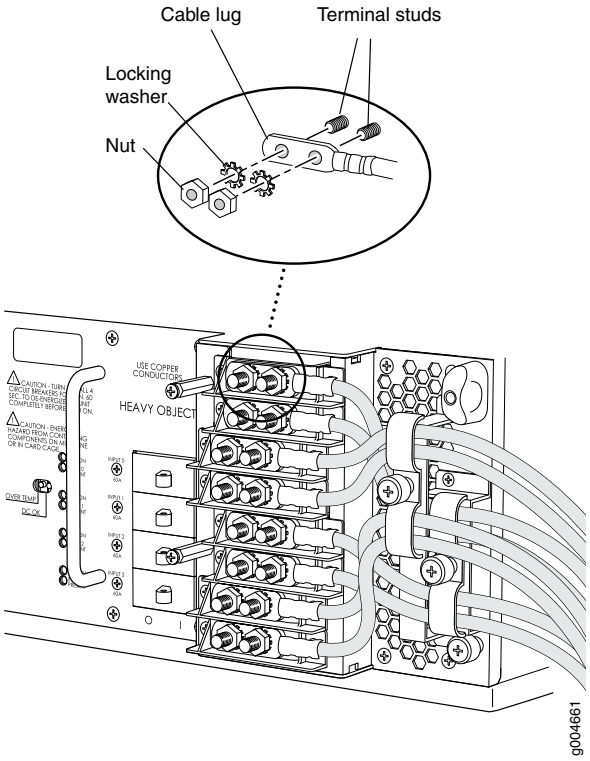

6. Remove the cable lugs from the terminal studs.

7. Loosen the captive screw or screws on the cable restraint on the right edge of the power supply faceplate.

8. Carefully move the power cables out of the way.

9. Loosen the captive screws on the lower corners of the power supply faceplate completely.

10. Twist the ejector handles on the upper corners of the faceplate counterclockwise to unseat the power supply.

11. Grasp the handle on the power supply faceplate and pull firmly. Slide it halfway out of the chassis (see Figure 185 on page 384).

CAUTION: Each four-input 240-A DC power supply weighs approximately 26.6 lb (12.0 kg). Be prepared to support the full weight of the power supply as you remove it from the router.

12. Place one hand underneath the power supply to support it and slide it completely out of the chassis.

Figure 185: Removing a Four-Input 240-A DC Power Supply

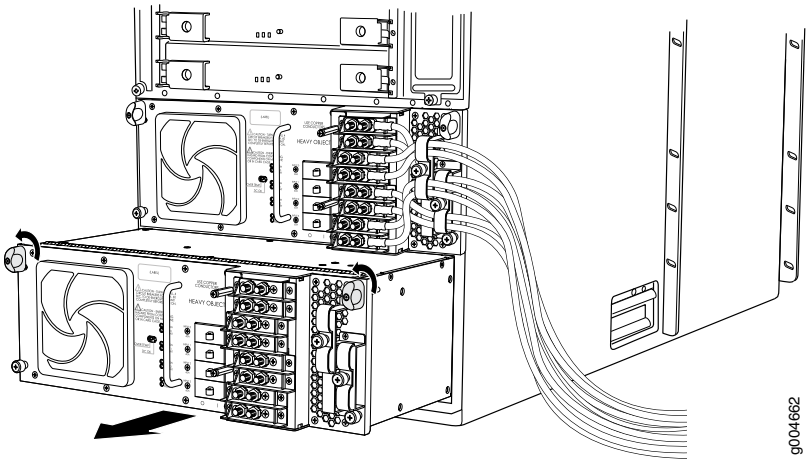

WARNING: Do not touch the power connectors on the rear of the power supply (see Figure 186 on page 384). They can contain dangerous voltages.

Figure 186: Rear of the Power Supply Showing Midplane Connectors

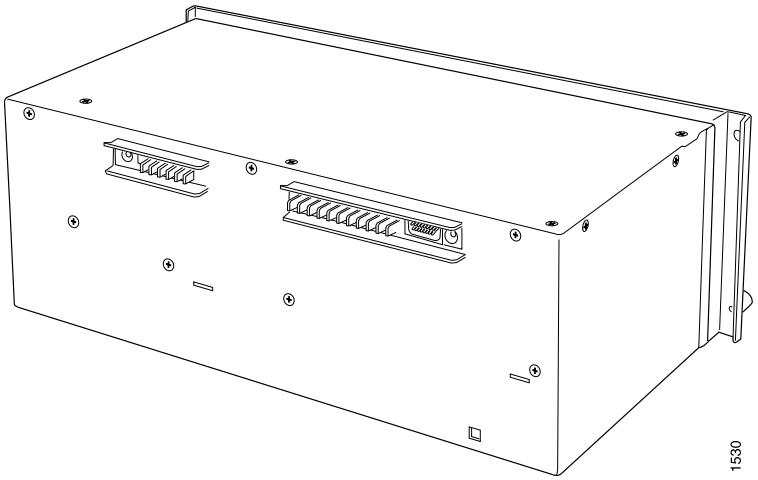

Copyright © 2019, Juniper Networks, Inc.

Installing a T640 Four-Input 240-A DC Power Supply

Each four-input 240-A DC power supply weighs approximately 26.6 lb (12.0 kg). To install a four-input 240-A DC power supply:

1. Make sure that the voltage across the DC power source cable leads is 0 V and that there is no chance that the cables might become active during installation.

2. Attach an electrostatic discharge (ESD) grounding strap to your bare wrist, and connect the strap to one of the ESD points on the chassis.

3. Switch the circuit breakers on the power supply faceplate to the **OFF** position (**O**).

4. Using both hands, slide the power supply into the chassis until you feel resistance (see Figure 188 on page 387).

5. Twist the ejector handles at the upper corners of the power supply faceplate clockwise until they stop.

6. Tighten the captive screws at the lower corners of the power supply faceplate to secure the power supply in the chassis.

7. Verify that a licensed electrician has attached cable lugs to the power cables that you supply.

8. Remove the clear plastic cover protecting the terminal studs on the faceplate.

9. Remove the nut and washer from each power terminal stud.

   CAUTION: **You must ensure that power connections maintain the proper polarity. The power source cables might be labeled (+) and (–) to indicate their polarity. There is no standard color coding for DC power cables. The color coding used by the external DC power source at your site determines the color coding for the leads on the power cables that attach to the terminal studs on each power supply.**

10. Attach the lugs on the DC source power cables to the terminal studs.

    a. Attach the positive (+) DC source power cable lugs to the **RETURN** (return) terminals.

    b. Attach the negative (–) DC source power cable lugs to the **–48V** (input) terminals.

Secure the cable lugs to the terminal studs, first with a washer, then with a nut (see Figure 187 on page 386). Use a 7/16-in. (11 mm) nut driver to tighten the nut. Apply between 23 lb-in. (2.6 Nm) and 25 lb-in. (2.8 Nm) of torque to each nut.

CAUTION: You must use an appropriate torque-controlled tool to tighten the nuts. Applying excessive torque damages the terminal studs and the power supply. The absolute maximum torque that may be applied to this nut is 45 lb-in. (5.0 Nm).

Figure 187: Connecting a Power Cable to a Four-Input 240-A DC Power Supply

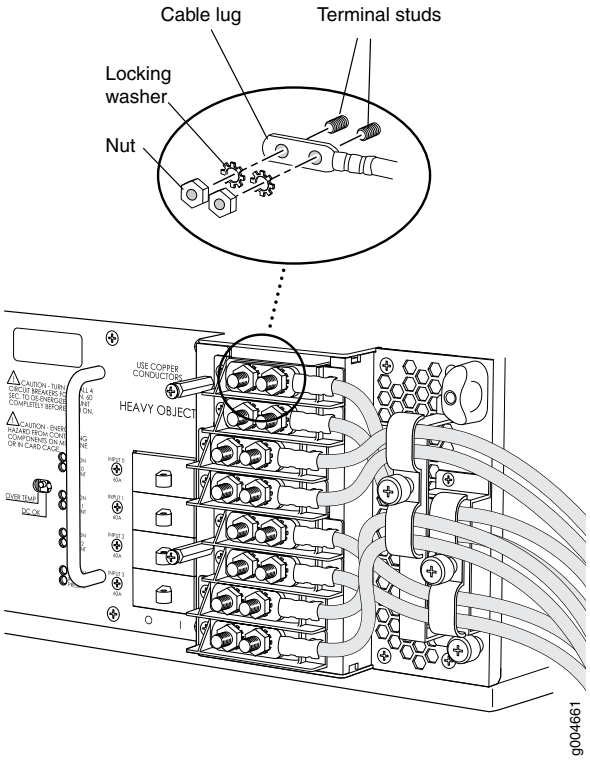

11. Loosen the captive screws on the cable restraint on the right edge of the power supply faceplate.

12. Route the DC power cables through the cable restraint.

13. Tighten the cable restraint captive screws to hold the power cables in place.

14. Verify that the power cabling is correct, that the power cables do not touch or block access to other hardware components, and that they do not drape where people could trip on them.

15. Replace the clear plastic cover over the terminal studs on the faceplate.

Copyright © 2019, Juniper Networks, Inc.

16. Switch on the customer site circuit breakers to provide voltage to the DC power source cables.

17. Verify that the **INPUT PRESENT** LEDs on the power supply faceplate are lit steadily, indicating that the inputs are receiving power.

18. Switch the circuit breakers on the power supply to the **ON** position (**|**).

NOTE: **After a power supply is powered on, it can take up to 60 seconds for status indicators—such as the LEDs on the power supply, the command output displays, and messages on the LED display on the craft interface—to indicate that the power supply is functioning normally. Ignore error indicators that appear during the first 60 seconds.**

19. Verify that the **CB ON** LEDs on the power supply faceplate are lit steadily, indicating that the circuit breakers are on.

20. Verify that the **DC OK** LED on the power supply faceplate is lit steadily, indicating that the power supply is correctly installed and is functioning properly. The **DC OK** LED blinks momentarily, then lights steadily.

Figure 188: Installing a Four-Input 240-A DC Power Supply

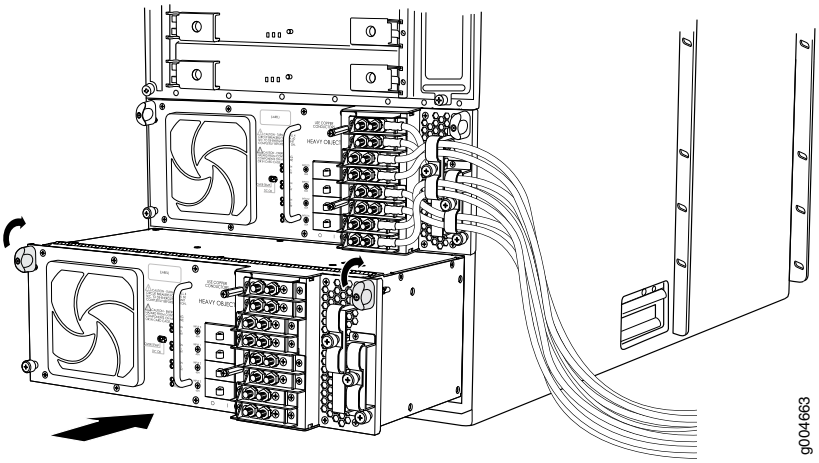

Related Documentation

- T640 Power System Description on page 103
- T640 Four-Input 240-A DC Power Supply Description on page 110
- T640 Four-Input 240-A DC Power Supply LEDs on page 111
- Troubleshooting the T640 Power System on page 498
- T640 DC Power Supply Electrical Specifications on page 134

Copyright © 2019, Juniper Networks, Inc.

- Site Electrical Wiring Guidelines for Juniper Networks Devices on page 560

Replacing a T640 DC Power Supply Cable on a Two-Input 160-A Power Supply, Three-Input 240-A DC Power Supply, or a Four-Input 240-A DC Power Supply

You can use this procedure to replace a DC power cable for a two-input 160-A power supply, three-input 240-A DC power supply, or a four-input 240-A DC power supply.

The router has either one nonredundant power supply or two redundant, load-sharing power supplies. Each DC power cable on a redundant power supply is hot-insertable and hot-removable. When a redundant power supply is powered down, the other power supply automatically assumes the entire electrical load for the router. If you have only one power supply, you must power off the system before removing a DC power cable.

To replace a DC power supply cable, perform the following procedures:

1. Removing a T640 DC Power Supply Cable from a Two-Input 160-A Power Supply, Three-Input 240-A DC Power Supply, or a Four-Input 240-A DC Power Supply on page 388
2. Installing a T640 DC Power Supply Cable on a Two-Input 160-A Power Supply, Three-Input 240-A DC Power Supply, or a Four-Input 240-A DC Power Supply on page 391

Removing a T640 DC Power Supply Cable from a Two-Input 160-A Power Supply, Three-Input 240-A DC Power Supply, or a Four-Input 240-A DC Power Supply

To remove a DC power supply cable:

1. Locate a replacement power cable that meets the specifications required for the power supply.

   CAUTION: **A licensed electrician must attach a cable lug to the power cable that you supply. A cable with an incorrectly attached lug can damage the router.**

2. Turn off the customer site circuit breaker that provides voltage to the DC power cable being replaced. Make sure that the voltage across the DC power source cable leads is 0 V and that there is no chance that the cables might become active during the removal process. Follow your site's safety and ESD procedures.

3. Remove the power cable from external DC power source.

4. Attach an electrostatic discharge (ESD) grounding strap to your bare wrist, and connect the strap to one of the ESD points on the chassis.

5. Switch the circuit breakers on the power supply faceplate to the off position (**O**).

Copyright © 2019, Juniper Networks, Inc.

6. Remove the clear plastic cover protecting the terminal studs on the faceplate.

CAUTION: You must ensure that power connections maintain the proper polarity. The power source cables might be labeled (+) and (–) to indicate their polarity. There is no standard color coding for DC power cables. The color coding used by the external DC power source at your site determines the color coding for the leads on the power cables that attach to the terminal studs on each power supply.

7. Remove the nut and washer from the terminal stud. Use a 7/16-in. (11 mm) nut driver.

8. Remove the cable lug from the terminal studs.

9. Loosen the captive screw or screws on the cable restraint on the right edge of the power supply faceplate.

10. Carefully move the power cable out of the way.

Figure 189 on page 389, Figure 190 on page 390, and Figure 191 on page 391 show how to remove the nut and washer from the terminal stud.

Figure 189: Disconnecting a DC Power Cable from a Two-Input 160-A DC Power Supply

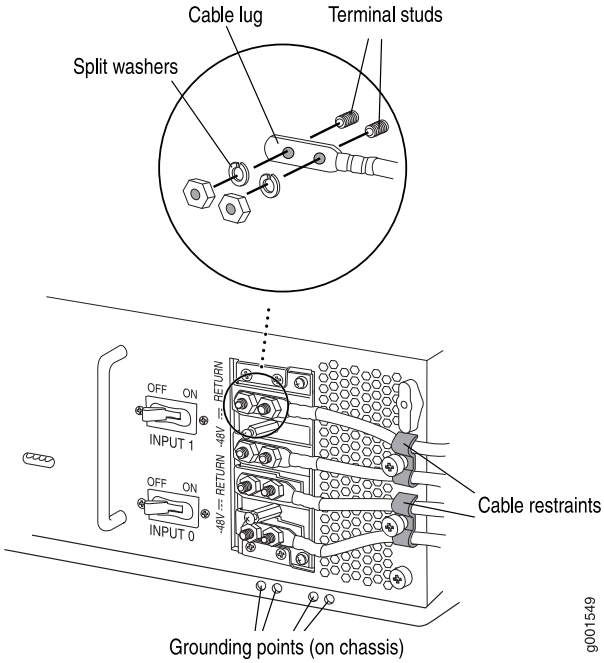

Figure 190: Disconnecting a DC Power Cable from a Three-Input 240-A DC Power Supply

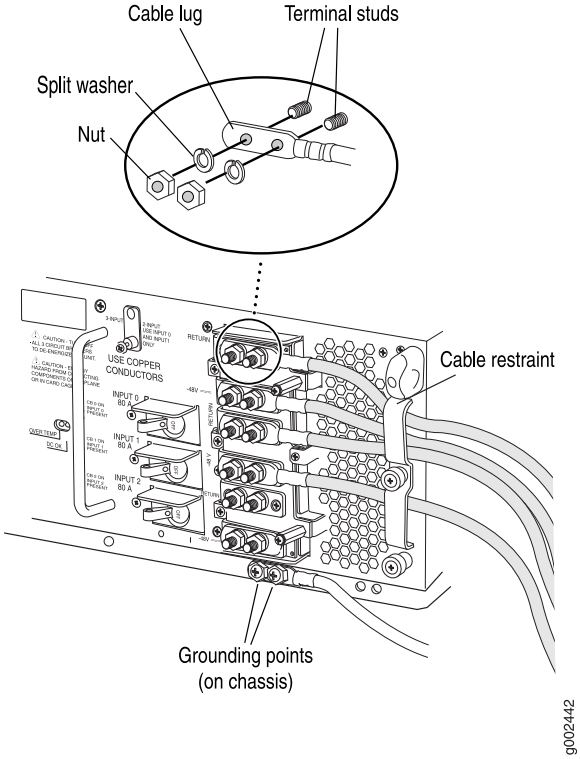

Copyright © 2019, Juniper Networks, Inc.

Figure 191: Disconnecting a DC Power Cable from a Four-Input 240-A DC Power Supply

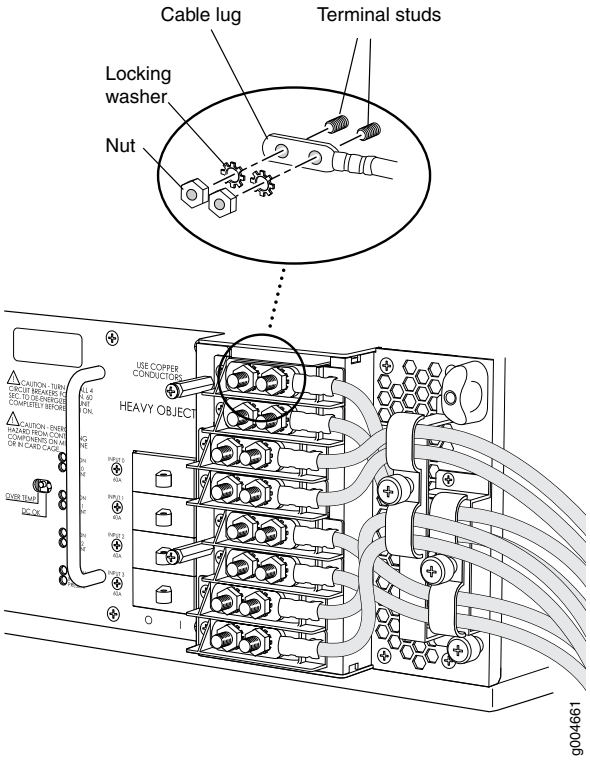

See Also

- T640 Preventing Electrostatic Discharge Damage on page 528
- T640 Power System Description on page 103
- Maintaining the T640 Power Supplies on page 477
- T640 DC Power Supply Electrical Specifications on page 134
- T640 DC Power Cable and Lug Specifications on page 140
- Site Electrical Wiring Guidelines for Juniper Networks Devices on page 560

Installing a T640 DC Power Supply Cable on a Two-Input 160-A Power Supply, Three-Input 240-A DC Power Supply, or a Four-Input 240-A DC Power Supply

NOTE: All inputs on the two-input 160-A DC power supply in slot **PEM0** must be powered by dedicated power feeds derived from feed A, and all inputs on the two-input 160-A DC power supply in slot **PEM1** must be powered by dedicated power feeds derived from feed B. This configuration provides the commonly deployed A/B feed redundancy for the system.

NOTE: Only **INPUT 0** and **INPUT 1** are supported for the T640 router. **INPUT 2** on the three-input 240-A DC power supply is not supported. Do not connect the replacement cable to **INPUT 2**. **INPUT 0** and **INPUT 1** on the three-input 240-A DC power supply in slot **PEM0** must be powered by dedicated power feeds derived from feed A, and **INPUT 0** and **INPUT 1** on the three-input 240-A DC power supply in slot **PEM1** must be powered by dedicated power feeds derived from feed B. This configuration provides the commonly deployed A/B feed redundancy for the system.

NOTE: All inputs on the four-input 240-A DC power supply in slot **PEM0** must be powered by dedicated power feeds derived from feed A, and all inputs on the four-input 240-A DC power supply in slot **PEM1** must be powered by dedicated power feeds derived from feed B. This configuration provides the commonly deployed A/B feed redundancy for the system.

1. Slide the replacement power cable lug onto the terminal stud.

2. Secure the cable lug on the DC power cable to the terminal stud, first with a washer, then with a nut. Use a 7/16-in. (11 mm) nut driver or wrench to tighten the nut. Apply between 23 lb-in. (2.6 Nm) and 25 lb-in. (2.8 Nm) of torque to each nut:

   a. Secure each positive (+) DC source power cable lug to a **RTN** (return) terminal.

   b. Secure each negative (–) DC source power cable lug to a **–48V** (input) terminal.

   CAUTION: You must ensure that power connections maintain the proper polarity. The power source cables might be labeled **(+)** and **(–)** to indicate their polarity. There is no standard color coding for DC power cables. The color coding used by the external DC power source at your site determines the color coding for the leads on the power cables that attach to the terminal studs on each power supply.

3. Route the power cable through the cable restraint.

4. Tighten the cable restraint captive screw or screws to hold the power cable in place.

5. Verify that the DC source power cabling and grounding cabling are correct, that they are not touching or blocking access to router components, and that they do not drape where people could trip on them.

6. Replace the clear plastic cover over the terminal studs on the faceplate.

Copyright © 2019, Juniper Networks, Inc.

7. Attach the power cable to the external DC power source.

8. Switch on the customer site circuit breaker that provides voltage to the DC power source cable that has been replaced.

9. For a three-input 240-A DC power supply, verify that the **INPUT PRESENT** LED is lit steadily, indicating that the input is receiving power.

10. Switch the circuit breakers on the power supply to the on position (**|**).

NOTE: **After a power supply is powered on, it can take up to 60 seconds for status indicators—such as the output status LEDs on the power supply, the command output display, and messages on the LCD on the craft interface—to indicate that the power supply is functioning normally. Ignore error indicators that appear during the first 60 seconds.**

11. Verify that the **CB ON** LED on the power supply faceplate is lit steadily. The **CB ON** LED blinks momentarily, then lights steadily to indicate that the circuit breakers are on.

12. Verify that the **DC OK** LED on the power supply faceplate is lit steadily, indicating that the power cable is correctly installed and the power supply is functioning normally.

Figure 192 on page 394, Figure 193 on page 394, and Figure 194 on page 395) show how to secure the nut and washer to the power supply.

Figure 192: Connecting a DC Power Cable to a Two-Input 160-A DC Power Supply

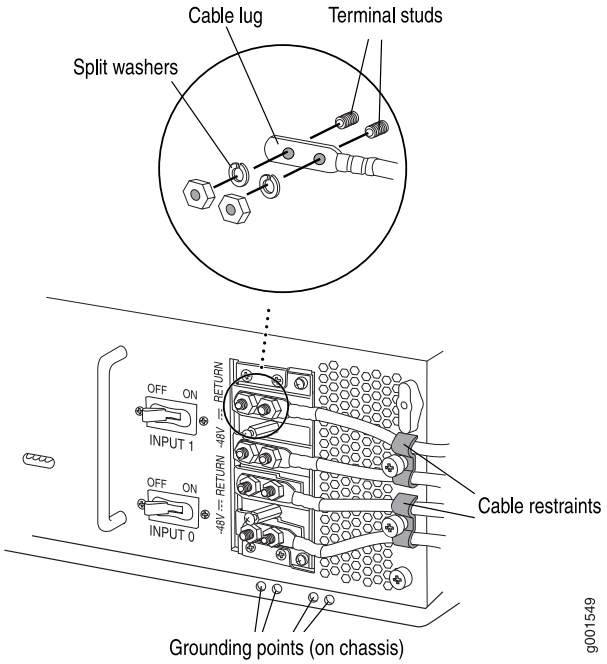

Figure 193: Connecting a DC Power Cable to a Three-Input 240-A DC Power Supply

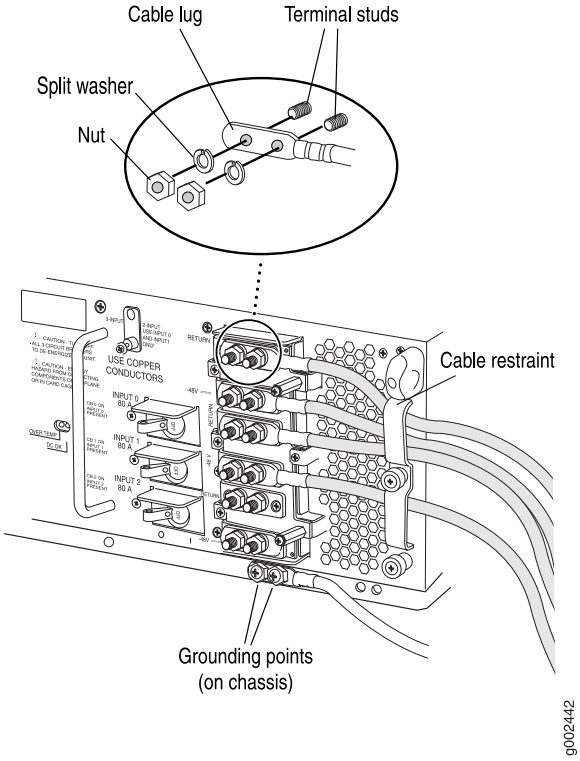

Copyright © 2019, Juniper Networks, Inc.

Figure 194: Connecting a DC Power Cable to a Four-Input 240-A DC Power Supply

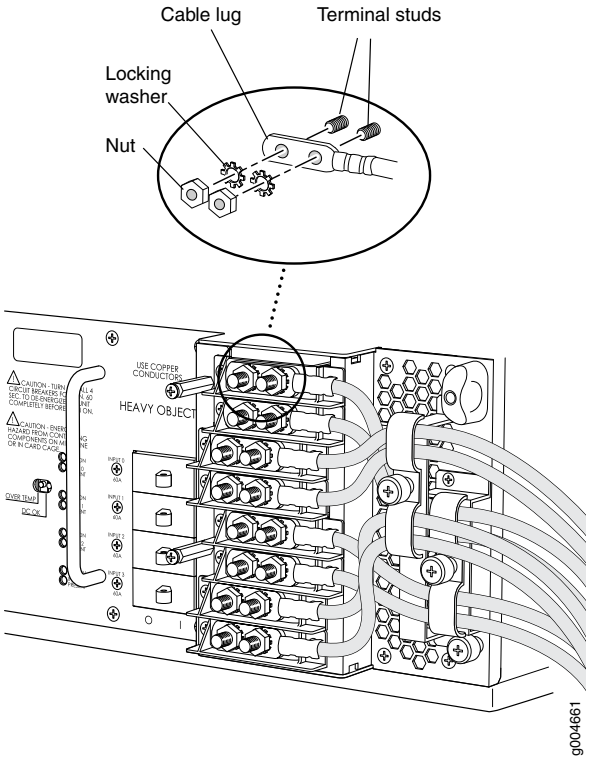

See Also

- T640 Power System Description on page 103
- Maintaining the T640 Power Supplies on page 477
- T640 DC Power Supply Electrical Specifications on page 134
- Site Electrical Wiring Guidelines for Juniper Networks Devices on page 560

Related Documentation

- T640 Power System Description on page 103
- Maintaining the T640 Power Supplies on page 477
- T640 DC Power Supply Electrical Specifications on page 134
- Site Electrical Wiring Guidelines for Juniper Networks Devices on page 560

Replacing a T640 Six-Input DC Power Supply

1. Removing a T640 Six-Input DC Power Supply on page 396
2. Installing a T640 Six-Input DC Power Supply on page 398

Removing a T640 Six-Input DC Power Supply

To remove a six-input DC power supply:

1. Switch off the customer site circuit breakers to the power supply being removed. Make sure that the voltage across the DC power source cable leads is 0 V and that there is no chance that the cables might become active during the removal process.

   NOTE: **After powering off a power supply, wait at least 60 seconds before turning it back on.**

2. Remove the clear plastic cover protecting the terminal studs on the faceplate.

Figure 195: DC Power Supply

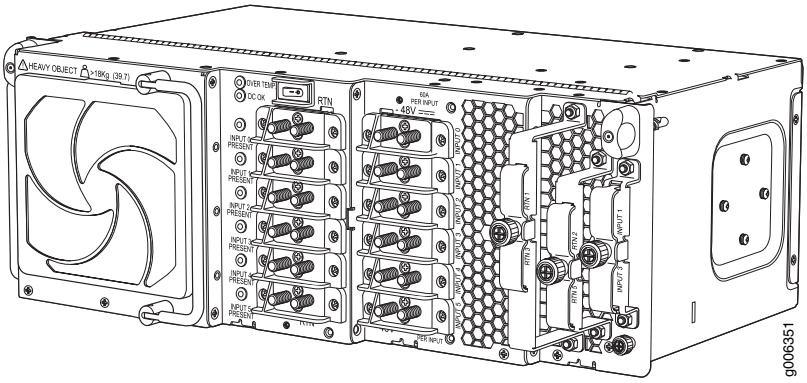

3. Using a 7/16-in. (11 mm) nut driver, remove the nuts and washers from the terminal studs (see Figure 196 on page 397).

   CAUTION: **You must ensure that power connections maintain the proper polarity. The power source cables might be labeled (+) and (–) to indicate their polarity. There is no standard color coding for DC power cables. The color coding used by the external DC power source at your site determines the color coding for the leads on the power cables that attach to the terminal studs on each power supply.**

Copyright © 2019, Juniper Networks, Inc.

Figure 196: Disconnecting Power Cables from the DC Power Supply

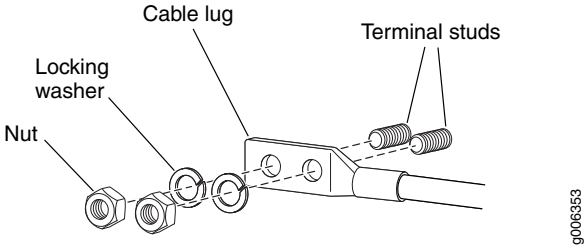

4. Remove the cable lugs from the terminal studs.

5. Loosen the captive screws on the cable restraints on the right edge of the power supply faceplate.

6. Carefully move the power cables out of the way.

7. Loosen the captive screws on the lower corners of the power supply faceplate completely.

8. Twist the ejector handles on the upper corners of the faceplate counterclockwise to unseat the power supply.

9. Grasp the handle on the power supply faceplate, and pull firmly. Slide it halfway out of the chassis (see Figure 197 on page 398).

   CAUTION: **Each DC power supply weighs approximately 39.7 lb (18.0 kg). Be prepared to support the full weight of the power supply as you remove it from the router.**

10. Place one hand underneath the power supply to support it, and slide it completely out of the chassis.

Figure 197: Removing a DC Power Supply

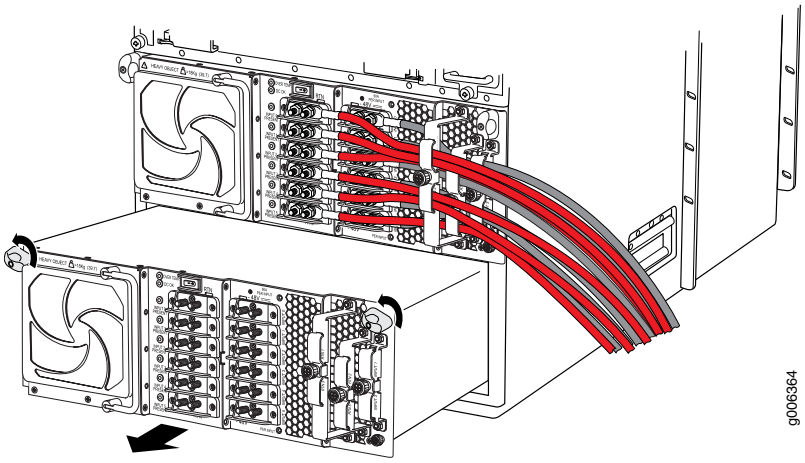

WARNING: Do not touch the power connectors on the rear of the power supply (see Figure 198 on page 398). They can contain dangerous voltages.

Figure 198: Rear of the Power Supply Showing Midplane Connectors

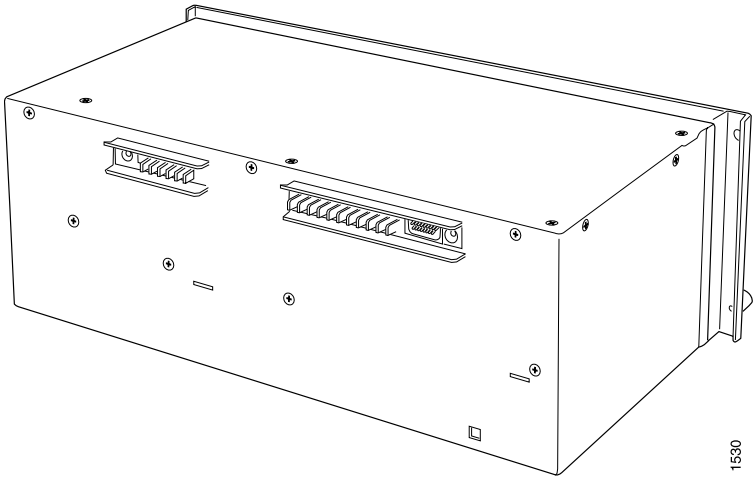

Installing a T640 Six-Input DC Power Supply

Each DC power supply weighs approximately 39.7 lb (18.0 kg). To install a six-input DC power supply:

1. Make sure that the voltage across the DC power source cable leads is 0 V and that there is no chance that the cables might become active during installation.

2. Attach an electrostatic discharge (ESD) grounding strap to your bare wrist, and connect the strap to one of the ESD points on the chassis.

Copyright © 2019, Juniper Networks, Inc.

3. Using both hands, slide the power supply into the chassis until you feel resistance (see Figure 199 on page 399).

Figure 199: Inserting the DC Power Supply into the Chassis

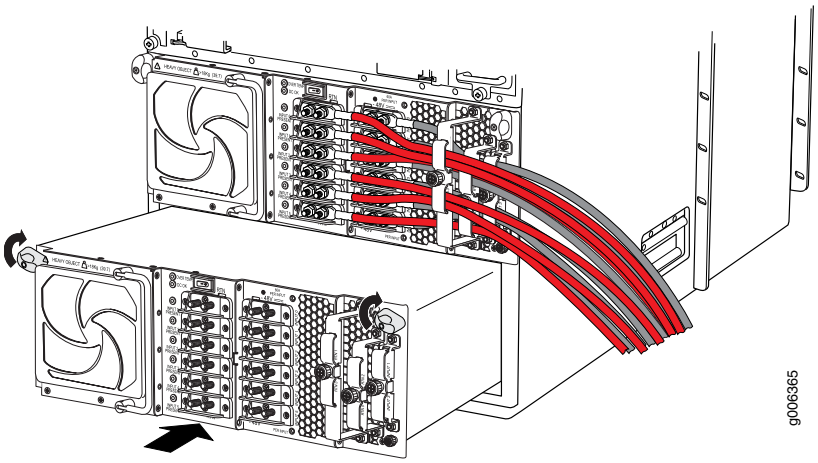

4. Twist the ejector handles at the upper corners of the power supply faceplate clockwise until they stop.

5. Tighten the captive screws at the lower corners of the power supply faceplate to secure the power supply in the chassis.

6. Verify that a licensed electrician has attached cable lugs to the power cables that you supply.

7. Remove the clear plastic cover protecting the terminal studs on the faceplate.

8. Remove the nut and washer from each power terminal stud.

CAUTION: You must ensure that power connections maintain the proper polarity. The power source cables might be labeled (+) and (–) to indicate their polarity. There is no standard color coding for DC power cables. The color coding used by the external DC power source at your site determines the color coding for the leads on the power cables that attach to the terminal studs on each power supply.

9. Attach the lugs on the DC source power cables to the terminal studs.

   a. Attach the negative (–) DC source power cable lug to the **–48V** (input) terminal.

   b. Attach the positive (+) DC source power cable lug to the **RTN** (return) terminal.

Secure the cable lugs to the terminal studs, first with a washer, then with a nut (see Figure 200 on page 400). Use a 7/16-in. (11 mm) nut driver to tighten the nut. Apply between 23 lb-in. (2.6 Nm) and 25 lb-in. (2.8 Nm) of torque to each nut.

CAUTION: **You must use an appropriate torque-controlled tool to tighten the nuts. Applying excessive torque damages the terminal studs and the power supply. The absolute maximum torque that may be applied to this nut is 45 lb-in. (5.0 Nm).**

Figure 200: Attaching the DC Power Cable

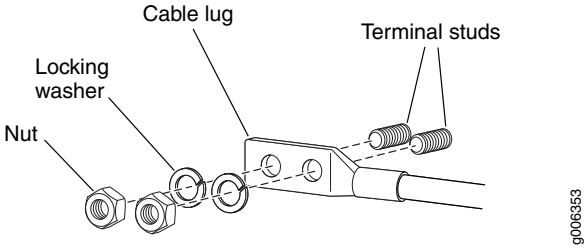

10. Loosen the captive screws on the cable restraint on the right edge of the power supply faceplate.

11. Route the DC power cables through the cable restraint.

12. Tighten the cable restraint captive screws to hold the power cables in place.

13. Verify that the power cabling is correct, that the power cables do not touch or block access to other hardware components, and that they do not drape where people could trip on them.

14. Replace the clear plastic cover over the terminal studs on the faceplate.

15. Switch on the customer site circuit breakers to provide voltage to the DC power source cables.

16. Verify that the **INPUT PRESENT** LEDs on the power supply faceplate are lit steadily, indicating that the inputs are receiving power.

17. Switch the power switch on the power supply to the **ON** position (**|**). The **DC OK** LED blinks momentarily, then lights steadily.

Copyright © 2019, Juniper Networks, Inc.

NOTE: After a power supply is powered on, it can take up to 60 seconds for status indicators—such as the LEDs on the power supply, the command output displays, and messages on the LED display on the craft interface—to indicate that the power supply is functioning normally. Ignore error indicators that appear during the first 60 seconds.

18. Verify that the **DC OK** LED on the power supply faceplate is lit steadily, indicating that the power supply is correctly installed and is functioning properly.

Related Documentation

- T640 Power System Description on page 103
- T640 Six-Input DC Power Supply Description on page 112
- T640 Six-Input DC Power Supply LEDs on page 113
- Troubleshooting the T640 Power System on page 498
- T640 DC Power Supply Electrical Specifications on page 134
- Site Electrical Wiring Guidelines for Juniper Networks Devices on page 560

Replacing a T640 DC Power Supply Cable on a Six-Input DC Power Supply

1. Removing a T640 DC Power Supply Cable from a Six-Input DC Power Supply on page 401
2. Installing a T640 DC Power Supply Cable on a Six-Input DC Power Supply on page 402

Removing a T640 DC Power Supply Cable from a Six-Input DC Power Supply

To remove a DC power supply cable from a six-input DC power supply:

1. Switch off the customer site circuit breakers for all the cables attached to the power supply. Make sure that the voltage across the DC power source cable leads is 0 V and that there is no chance that the cables might become active during the removal process.

2. Remove the power cable from the external DC power source.

3. Remove the clear plastic cover protecting the terminal studs on the faceplate.

4. Remove the nut and washer from the terminal stud on the power supply (see Figure 201 on page 402). Use a 7/16-in. (11 mm) nut driver.

Figure 201: Disconnecting the DC Power Cable

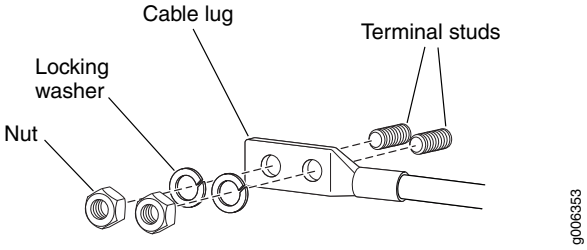

5. Remove the cable lug from the terminal stud on the power supply.

6. Loosen the captive screw or screws on the cable restraint on the right edge of the power supply faceplate.

7. Carefully move the power cable out of the way.

Installing a T640 DC Power Supply Cable on a Six-Input DC Power Supply

To install a DC power supply cable on a six-input DC power supply:

1. Locate a DC power cable that meets the specifications for the power supply.

   CAUTION: A licensed electrician must attach a cable lug to the power cable that you supply. A cable with an incorrectly attached lug can damage the router.

2. Route the power cable through the appropriate cable restraint.

3. Attach the lug on the DC source power cable to the terminal stud.

   a. Attach a negative (–) DC source power cable lug to the **–48V** (input) terminals.

   b. Attach a positive (+) DC source power cable lug to the **RET** (return) terminals.

   Secure the cable lug to the terminal stud, first with a washer, then with a nut (see Figure 202 on page 403). Use a 7/16-in. (11-mm) nut driver to tighten the nut. Apply between 23 lb-in. (2.6 Nm) and 25 lb-in. (2.8 Nm) of torque to each nut.

   CAUTION: You must use an appropriate torque-controlled tool to tighten the nuts. Applying excessive torque damages the terminal studs and the power supply. The absolute maximum torque that may be applied to this nut is 45 lb-in. (5.0 Nm).

Copyright © 2019, Juniper Networks, Inc.

Figure 202: Connecting the DC Power Cable

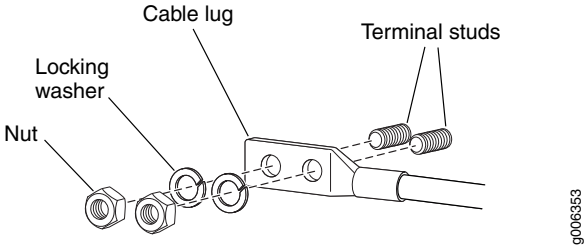

4. Tighten the cable restraint captive screw or screws to hold the power cable in place.

5. Replace the clear plastic cover over the terminal studs on the faceplate.

6. Verify that the DC source power cabling is correct, that the power cable is not touching or blocking access to router components, and that it does not drape where people could trip on it.

7. Attach the other end of the power cable to the external DC power source.

8. Switch on the customer site circuit breakers.

9. Verify that the **INPUT PRESENT** LEDs on the power supply faceplate are lit steadily, indicating that the inputs are receiving voltage.

10. Switch the power switch on the power supply to the **ON** position (**|**). The **DC OK** LED blinks momentarily, then lights steadily.

NOTE: After a power supply is powered on, it can take up to 60 seconds for status indicators—such as the LEDs on the power supply, the command output displays, and messages on the LED display on the craft interface—to indicate that the power supply is functioning normally. Ignore error indicators that appear during the first 60 seconds.

11. Verify that the **DC OK** LED on the power supply faceplate is lit steadily, indicating that the power supply is correctly installed and is functioning properly.

Related Documentation

- T640 Power System Description on page 103
- T640 Six-Input DC Power Supply Description on page 112
- T640 Six-Input DC Power Supply LEDs on page 113
- Troubleshooting the T640 Power System on page 498
- T640 DC Power Supply Electrical Specifications on page 134

Copyright © 2019, Juniper Networks, Inc.

- Site Electrical Wiring Guidelines for Juniper Networks Devices on page 560

Replacing a T640 Six-Input DC Power Supply Front Air Filter

1. Removing a T640 Six-Input DC Power Supply Front Air Filter on page 404
2. Installing a T640 Six-Input DC Power Supply Front Air Filter on page 404

Removing a T640 Six-Input DC Power Supply Front Air Filter

To remove a six-input DC power supply :

1. Attach an electrostatic discharge (ESD) grounding strap to your bare wrist, and connect the strap to one of the ESD points on the chassis.
2. Grasp the filter cover on the power supply faceplate, and pull it straight off the power supply.
3. Remove the air filter.

Installing a T640 Six-Input DC Power Supply Front Air Filter

To install a six-input DC power supply front filter element:

1. Attach an electrostatic discharge (ESD) grounding strap to your bare wrist, and connect the strap to one of the ESD points on the chassis.
2. Install a new filter element.
3. Press the filter cover straight onto the power supply faceplate until all four sides click into place.

Related Documentation

- T640 Six-Input DC Power Supply Description on page 112
- T640 Six-Input DC Power Supply LEDs on page 113
- Maintaining the T640 Power Supplies on page 477
- T640 Preventing Electrostatic Discharge Damage on page 528
- General Safety Guidelines for Juniper Networks Devices on page 525

Replacing a T640 Six-Input DC Power Supply Side Air Filter

1. Removing a T640 Six-Input DC Power Supply Side Air Filter on page 405
2. Installing a T640 Six-Input DC Power Supply Side Air Filter on page 405

Copyright © 2019, Juniper Networks, Inc.

Removing a T640 Six-Input DC Power Supply Side Air Filter

To remove a six-input DC power supply side air filter element:

1. Attach an electrostatic discharge (ESD) grounding strap to your bare wrist, and connect the strap to one of the ESD points on the chassis.

2. Loosen the captive screw.

3. Slide the air filter cover until the two lances leave the sheet metal.

4. Remove the air filter cover hooks from the rectangle holes in the sheet metal.

5. Remove the side air filter element from the air filter cover.

Figure 203: Removing the Power Supply Side Air Filter

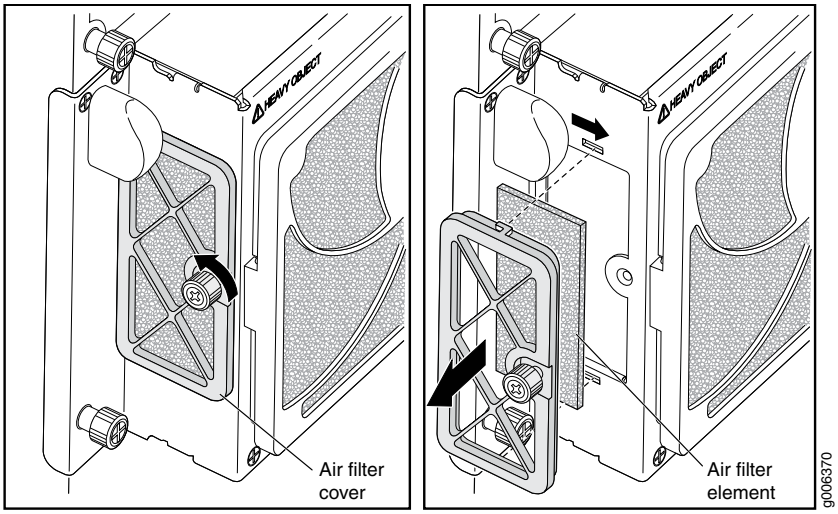

Installing a T640 Six-Input DC Power Supply Side Air Filter

To install a six-input DC power supply side air filter element:

1. Attach an electrostatic discharge (ESD) grounding strap to your bare wrist, and connect the strap to one of the ESD points on the chassis.

2. Install a new side filter element into the side air filter cover.

3. Insert the side air filter cover hooks into the rectangle holes in the sheet metal.

4. Slide the side air filter cover back into the power supply faceplate. The two lances insert into the sheet metal.

5. Tighten the captive screw.

Figure 204: Installing the Power Supply Side Air Filter

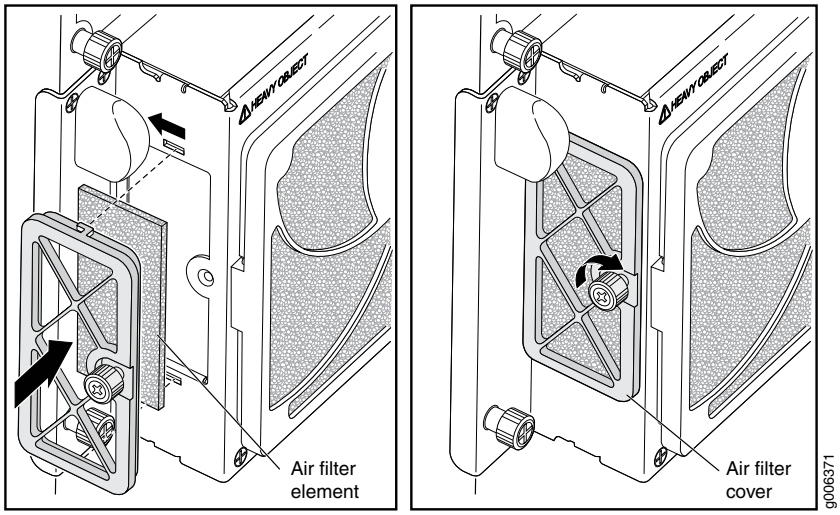

Related Documentation

- T640 Six-Input DC Power Supply Description on page 112
- T640 Six-Input DC Power Supply LEDs on page 113
- Maintaining the T640 Power Supplies on page 477
- T640 Preventing Electrostatic Discharge Damage on page 528
- General Safety Guidelines for Juniper Networks Devices on page 525

Replacing a Front Air Filter Element on a T640 AC or DC Power Supply

You can use this procedure for a two-input 160-A DC power supply, three-input 240-A DC power supply, four-input 240-A DC power supply, three-phase delta AC power supply, or three-phase wye AC power supply.

1. Removing a Front Air Filter Element on a T640 AC or DC Power Supply on page 406
2. Installing a Front Air Filter Element on a T640 AC or DC Power Supply on page 407

Removing a Front Air Filter Element on a T640 AC or DC Power Supply

To remove a power supply front air filter element (see Figure 205 on page 407):

1. Attach an electrostatic discharge (ESD) grounding strap to your bare wrist, and connect the strap to one of the ESD points on the chassis.

Copyright © 2019, Juniper Networks, Inc.

2. Grasp the filter cover on the power supply faceplate and pull it straight off the power supply.

3. Remove the front air filter element.

Figure 205: Removing a Front Air Filter Element

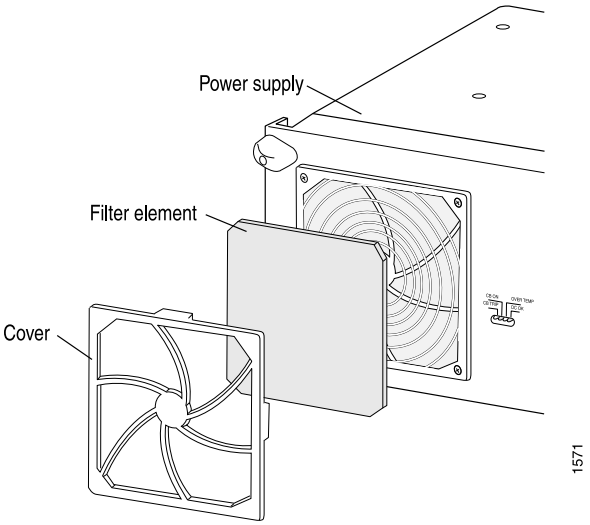

Installing a Front Air Filter Element on a T640 AC or DC Power Supply

To install a power supply front filter element (see Figure 206 on page 408):

1. Attach an electrostatic discharge (ESD) grounding strap to your bare wrist, and connect the strap to one of the ESD points on the chassis.

2. Install a new filter element.

3. Press the filter cover straight onto the power supply faceplate until all four sides click into place.

Figure 206: Installing a Front Air Filter Element

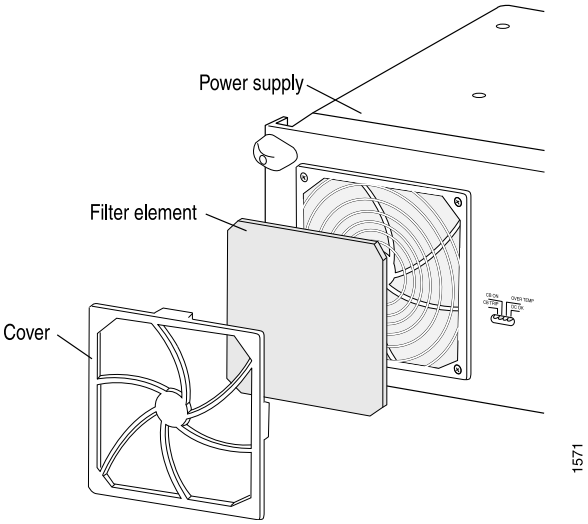

See Also

- T640 Three-Phase Delta and Wye AC Power Supply Description on page 114
- T640 Two-Input 160-A DC Power Supply Description on page 104
- T640 Three-Input 240-A DC Power Supply Description on page 107
- T640 Four-Input 240-A DC Power Supply Description on page 110
- Maintaining the T640 Power Supplies on page 477
- T640 Preventing Electrostatic Discharge Damage on page 528
- General Safety Guidelines for Juniper Networks Devices on page 525

Replacing a Side Air Filter on a T640 AC Power Supply

1. Removing a Side Air Filter on a T640 AC Power Supply on page 409
2. Installing a Side Air Filter on a T640 AC Power Supply on page 410

Copyright © 2019, Juniper Networks, Inc.

Removing a Side Air Filter on a T640 AC Power Supply

To remove an AC power supply side air filter:

NOTE: The router has either one nonredundant power supply or two redundant, load-sharing power supplies. If you have only one power supply, you must power off the system before removing the side air filter on an AC power supply. Each redundant power supply is hot-removable and hot-insertable. When a redundant power supply is powered down or removed, the other power supply automatically assumes the entire electrical load for the router.

1. Attach an electrostatic discharge (ESD) grounding strap to your bare wrist, and connect the strap to one of the ESD points on the chassis.

2. Switch the power switch on the power supply faceplate to the standby position.

   NOTE: After powering off a power supply, wait at least 60 seconds before turning it back on.

3. Detach the ESD grounding strap from the ESD points on the chassis. Reattach the strap to an approved site ESD grounding point. Follow the instructions for your site.

4. Switch off the customer site circuit breakers to the power supply. Make sure that the voltage across the AC power source cable leads is 0 V and that there is no chance that the cables might become active during the replacement.

5. Disconnect the AC power cord from the AC power source.

6. Reattach the ESD grounding strap to one of the ESD points on the chassis.

7. Grasp the front filter cover on the power supply faceplate and pull it straight off the power supply.

8. Remove the front filter element.

9. Loosen the screws (using a Phillips (+) screwdriver, number 2) on the bracket located on the side of the power supply.

10. Pull the side filter, located on the left side of the AC power supply, out of the power supply.

Copyright © 2019, Juniper Networks, Inc.

Figure 207: Removing the AC Power Supply Side Air Filter

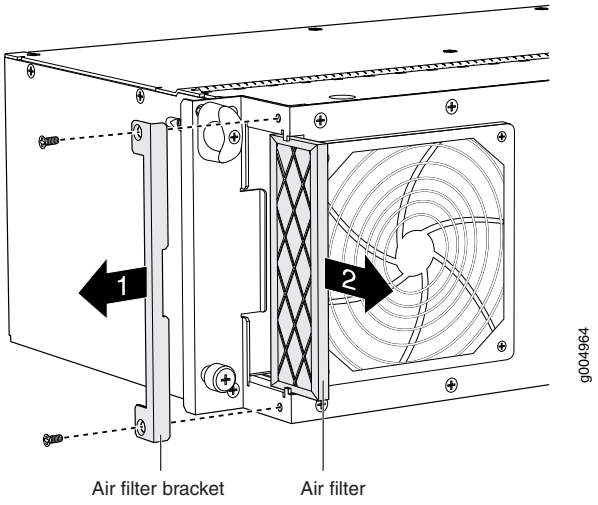

Installing a Side Air Filter on a T640 AC Power Supply

To install the side AC power supply filter:

1. Verify that the customer site circuit breakers to the power supply is off, that that the voltage across the AC power source cord is 0 V, and that there is no chance that the AC power cord might become active during the replacement.

2. Attach an electrostatic discharge (ESD) grounding strap to your bare wrist, and connect the strap to one of the ESD points on the chassis.

3. Install the replacement side filter.

4. Using a Phillips (+) screwdriver, number 2, tighten the screws on the bracket located on the side of the power supply.

5. Reinstall the front filter element.

6. Press the front filter cover straight onto the power supply faceplate until all four sides click into place.

7. Detach the ESD grounding strap from the ESD points on the chassis. Attach the ESD to an approved site ESD grounding point. Follow the instructions for your site.

8. Connect the AC power cord to the power source.

9. Switch on the customer site circuit breakers to the power supply.

Copyright © 2019, Juniper Networks, Inc.

10. Detach the ESD grounding strap from the approved site ESD grounding point. Follow the instructions for your site. Reattach the ESD grounding strap to one of the ESD points on the chassis.

11. Verify that the **AC OK** LED on the power supply faceplate is lit steadily, indicating that the inputs are receiving power.

12. Switch the power switch on the power supply to the **ON** position (**|**).

13. Verify that the **DC OK** LED on the power supply faceplate is lit steadily, indicating that the power supply is correctly installed and is functioning properly. The **DC OK** LED blinks momentarily, then lights steadily.

NOTE: After a power supply is powered on, it can take up to 60 seconds for status indicators—such as the LEDs on the power supply, the command output displays, and messages on the LED display on the craft interface—to indicate that the power supply is functioning normally. Ignore error indicators that appear during the first 60 seconds.

Figure 208: Installing the Side Power Supply Filter

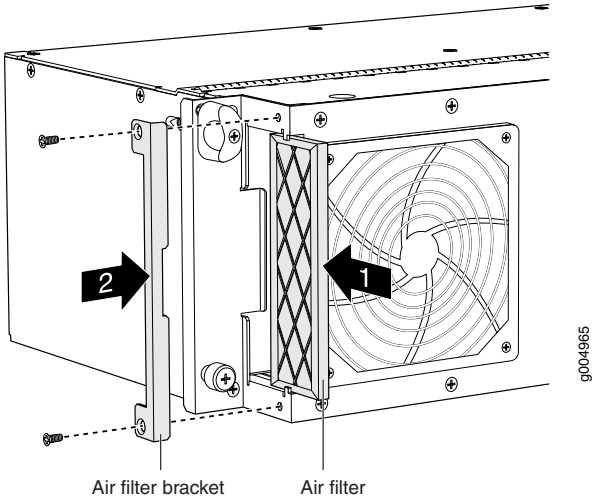

Related Documentation

- T640 Three-Phase Delta and Wye AC Power Supply Description on page 114
- T640 Three-Phase Delta and Wye AC Power Supply LEDs on page 117
- Powering Off the T640 Router on page 256
- Maintaining the T640 Power Supplies on page 477
- T640 Preventing Electrostatic Discharge Damage on page 528
- General Safety Guidelines for Juniper Networks Devices on page 525

Copyright © 2019, Juniper Networks, Inc.

Replacing a T640 Three-Phase Delta AC Power Supply

The T640 router has either one nonredundant power supply or two redundant, load-sharing power supplies. Each redundant power supply is hot-insertable and hot-removable. When a redundant power supply is powered down or removed, the other power supply automatically assumes the entire electrical load for the router. If you have only one power supply, you must power off the system before removing the power supply.

1. Removing a T640 Three-Phase Delta AC Power Supply on page 412
2. Installing a T640 Three-Phase Delta AC Power Supply on page 416

Removing a T640 Three-Phase Delta AC Power Supply

To remove a three-phase delta AC power supply:

1. Switch off the customer site circuit breakers to the power supply being removed. Make sure that the voltage across the AC power source cord is 0 V and that there is no chance that the cord might become active during the removal process.

2. Attach an electrostatic discharge (ESD) grounding strap to your bare wrist, and connect the strap to one of the ESD points on the chassis.

3. Switch the power switch on the power supply faceplate to the standby position.

   NOTE: **After powering off a power supply, wait at least 60 seconds before turning it back on.**

4. Remove the ESD grounding strap from the ESD point on the chassis, and attach it to an approved site ESD grounding point. See the instructions for your site.

5. Disconnect the AC power cord (see Figure 209 on page 413) from the power source.

Copyright © 2019, Juniper Networks, Inc.

Figure 209: Three-Phase Delta AC Power Supply

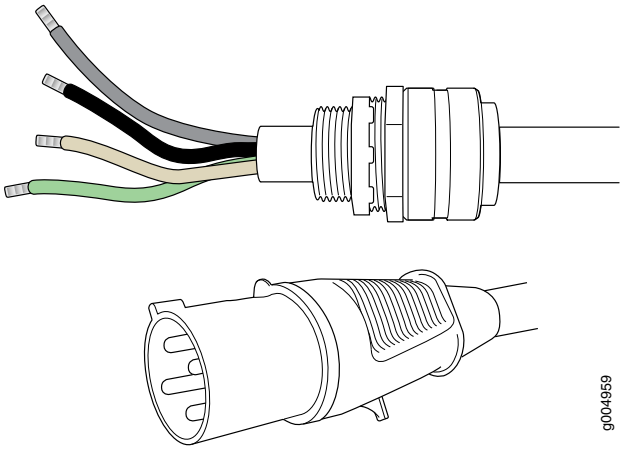

6. Remove the ESD grounding strap from the approved site ESD grounding point. See the instructions for your site. Reconnect the strap to one of the ESD points on the chassis.

7. Using a number 2 Phillips (+) screwdriver, loosen the two screws on the door of the metal wiring compartment that protects the AC terminal block.

8. Open the door of the metal wiring compartment.

9. Disconnect the wires from the AC terminal block on the three-phase delta AC power supply (Figure 210 on page 414), loosen each of the input terminals or grounding point screws, and remove each wire from the grounding point or input terminal.

   NOTE: The terminal connections have either slotted screws or hex screws. Use a 1/4-in. slotted screwdriver for the slotted screws. Use a 5/32-in (4-mm) Allen wrench for the 5/16-in hex screws.

   a. Remove the wire labeled **L3** from the **L3** input terminal.

   b. Remove the wire labeled **L2** from the **L2** input terminal.

   c. Remove the wire labeled **L1** from the **L1** input terminal.

   d. Remove the wire labeled **GND** from the grounding point labeled **GND**.

Figure 210: Disconnecting the Power Cord from a Three-Phase Delta AC Power Supply

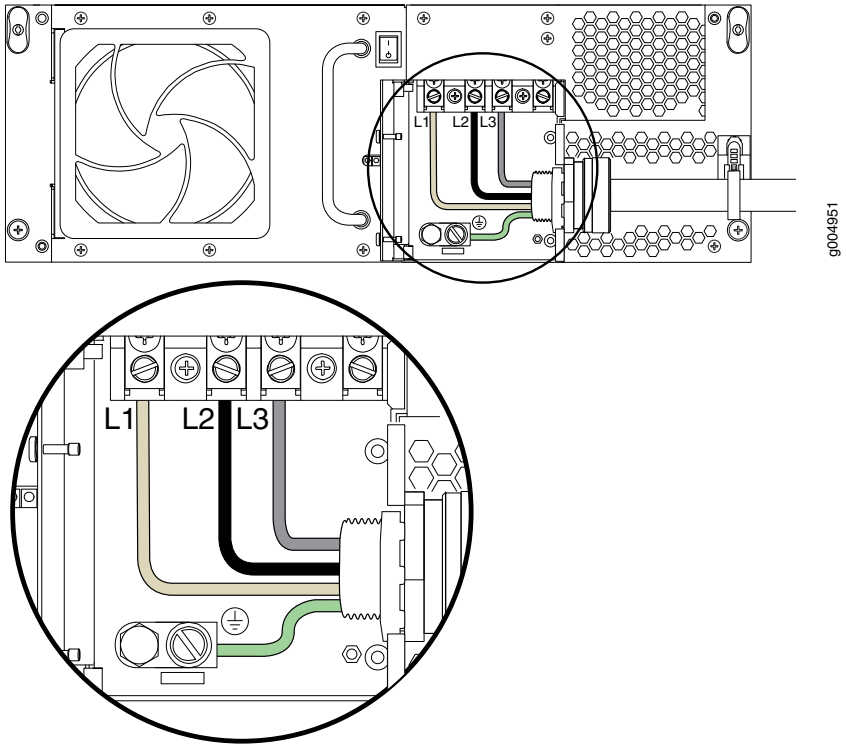

10. Loosen the plastic cable tie fastening the AC power cord to the power supply.

11. Loosen and remove the retaining nut from the AC power cord.

Copyright © 2019, Juniper Networks, Inc.

12. Pull the AC power cord out of the metal wiring compartment.

13. Carefully move the AC power cable out of the way.

14. Disconnect the AC power cord from the AC power supply.

15. Loosen the captive screws on the lower corners of the power supply faceplate completely.

16. Twist the ejector handles on the upper corners of the faceplate counterclockwise to unseat the power supply.

17. Grasp the handle on the power supply faceplate and pull firmly. Slide it halfway out of the chassis (see Figure 211 on page 415).

CAUTION: Each three-phase delta AC power supply weighs approximately 31.0 lb (14.06 kg). Be prepared to support the full weight of the power supply as you remove it from the router.

18. Place one hand underneath the power supply to support it and slide it completely out of the chassis.

Figure 211: Removing a Three-Phase Delta AC Power Supply

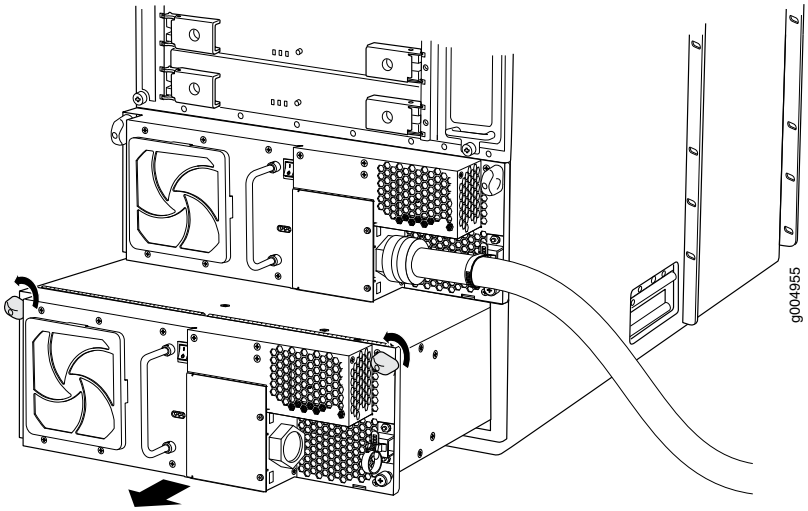

WARNING: Do not touch the power connectors on the rear of the power supply (see Figure 212 on page 416). They can contain dangerous voltages.

Figure 212: Rear of the Power Supply Showing Midplane Connectors

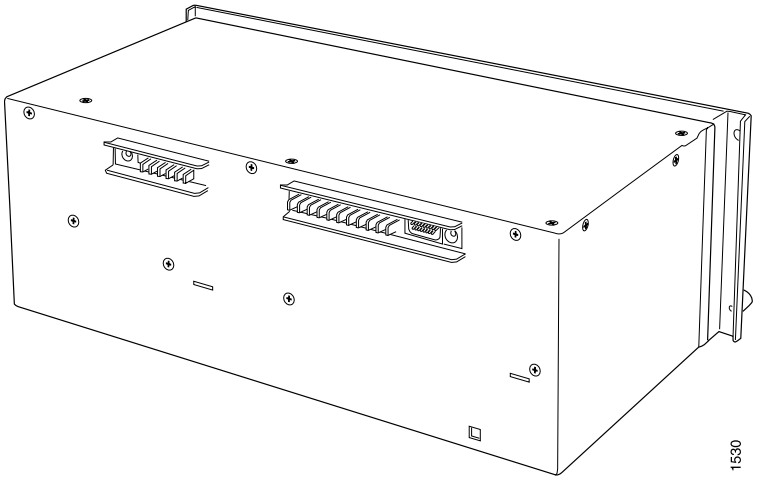

See Also

- T640 Three-Phase Delta and Wye AC Power Supply Description on page 114
- T640 Three-Phase Delta and Wye AC Power Supply LEDs on page 117
- Troubleshooting the T640 Power System on page 498
- T640 Preventing Electrostatic Discharge Damage on page 528

Installing a T640 Three-Phase Delta AC Power Supply

Each three-phase delta AC power supply weighs approximately 31.0 lb (14.06 kg). To install a three-phase delta AC power supply:

1. Make sure that the voltage across the AC power source cord leads is 0 V and that there is no chance that the cord might become active during installation.

2. Attach an electrostatic discharge (ESD) grounding strap to your bare wrist, and connect the strap to one of the ESD points on the chassis.

3. Switch the power switch on the power supply faceplate to the standby position.

4. Using both hands, slide the power supply into the chassis until you feel resistance (see Figure 214 on page 420).

5. Twist the ejector handles at the upper corners of the power supply faceplate clockwise until they stop.

6. Tighten the captive screws at the lower corners of the power supply faceplate to secure the power supply in the chassis.

Copyright © 2019, Juniper Networks, Inc.

7. Using a number 2 Phillips (+) screwdriver, loosen the two screws on the door of the metal wiring compartment that protects the AC terminal block.

8. Open the door of the metal wiring compartment.

9. Unscrew the retaining nut from the AC power cord.

10. Place the retaining nut inside the metal wiring compartment.

11. Put the wires of the AC power cord through the hole of the metal wiring compartment.

12. Screw the retaining nut onto the AC power cord to secure it to the metal wiring compartment.

Copyright © 2019, Juniper Networks, Inc.

13. Connect the wires to the AC terminal block on the three-phase delta AC power supply (Figure 213 on page 418). Loosen each of the input terminal or grounding point screws, insert the wire into the grounding point or input terminal, and tighten the screw.

    NOTE: The terminal connections have either slotted screws or hex screws. Use a 1/4-in. slotted screwdriver for the slotted screws. Use a 5/32-in (4-mm) Allen wrench for the 5/16-in hex screws.

    a. Insert the wire labeled **GND** into the grounding point labeled **GND**.

    b. Insert the wire labeled **L1** into the **L1** input terminal

    c. Insert the wire labeled **L2** into the **L2** input terminal.

    d. Insert the wire labeled **LC3** into the **LC3** input terminal.

Figure 213: Connecting Power to a Three-Phase Delta AC Power Supply

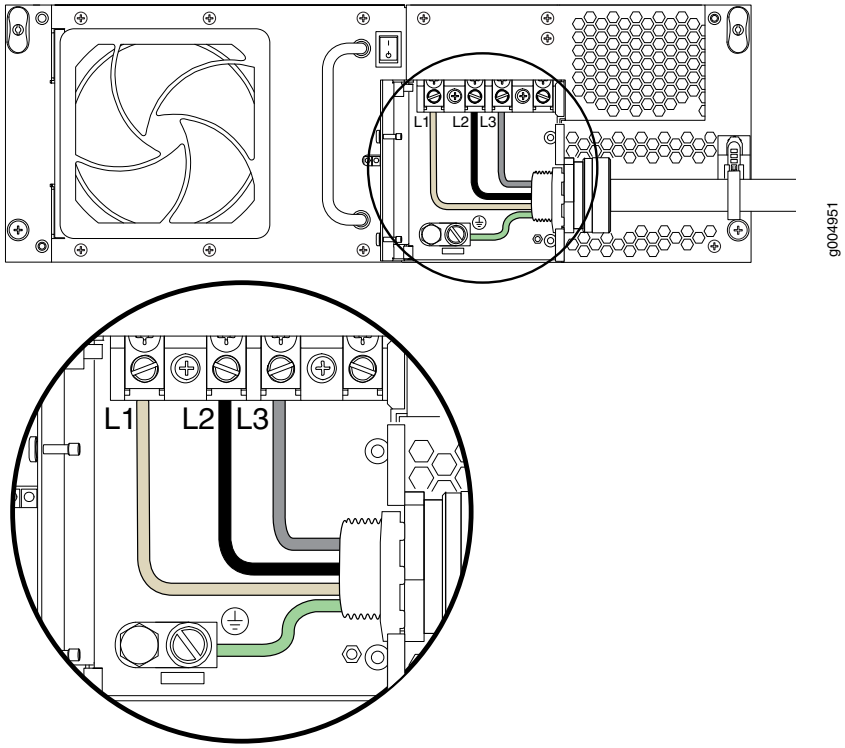

14. Verify that the power cord wire connections are correct.

15. Using a number 2 Phillips (+) screwdriver, tighten the two captive screws on the metal AC wiring compartment.

Copyright © 2019, Juniper Networks, Inc.

16. Verify that the AC power cord is not touching or blocking access to router components, and that it does not drape where people could trip on it.

17. Remove the ESD grounding strap from the ESD points on the chassis. Connect the strap to an approved site ESD grounding point. See the instructions for your site.

18. Connect the AC power cord plug to the power source.

19. Switch on the customer site circuit breakers to provide voltage to the AC power cord.

20. Remove the ESD grounding strap from the approved site ESD grounding point. See the instructions for your site. Reconnect the strap to one of the ESD points on the chassis.

21. Verify that the **AC OK** LED on the power supply faceplate is lit steadily, indicating that the AC terminal block is receiving power.

22. Switch the power switch on the power supply to the **ON** position (**|**) to provide power to the router components.

23. Verify that the **DC OK** LED on the power supply faceplate is lit steadily, indicating that the power supply is correctly installed and is functioning properly. The **DC OK** LED blinks momentarily, then lights steadily.

NOTE: After a power supply is powered on, it can take up to 60 seconds for status indicators—such as the LEDs on the power supply, the command output displays, and messages on the LED display on the craft interface—to indicate that the power supply is functioning normally. Ignore error indicators that appear during the first 60 seconds.

Figure 214: Installing a Three-Phase Delta AC Power Supply

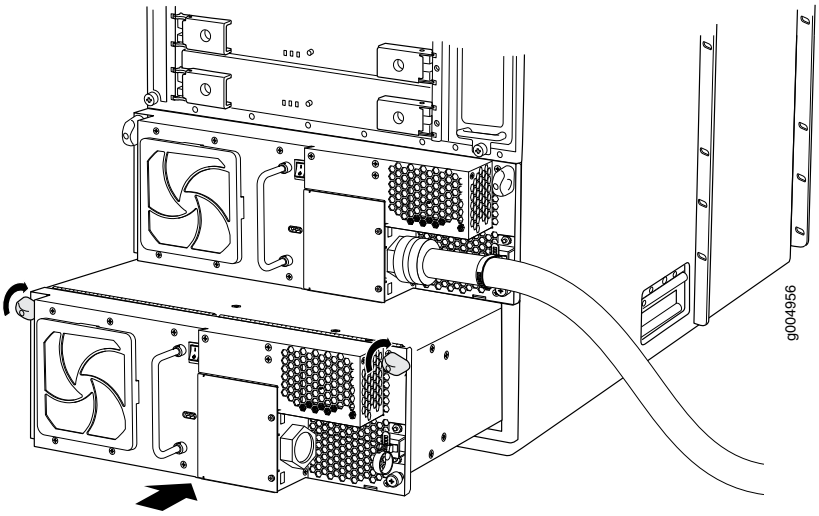

See Also

- T640 Three-Phase Delta and Wye AC Power Supply Description on page 114
- T640 Three-Phase Delta and Wye AC Power Supply LEDs on page 117
- Troubleshooting the T640 Power System on page 498
- T640 Preventing Electrostatic Discharge Damage on page 528

Related Documentation

- T640 Three-Phase Delta and Wye AC Power Supply Description on page 114
- T640 Three-Phase Delta and Wye AC Power Supply LEDs on page 117
- Troubleshooting the T640 Power System on page 498
- T640 Preventing Electrostatic Discharge Damage on page 528

Replacing a T640 Three-Phase Delta AC Power Supply Cord

1. Removing a T640 Three-Phase Delta AC Power Supply Cord on page 420
2. Installing a T640 Three-Phase Delta AC Power Supply Cord on page 423

Removing a T640 Three-Phase Delta AC Power Supply Cord

To remove a three-phase delta AC power supply cord:

1. Switch off the customer site circuit breakers to the power supply being removed. Make sure that the voltage across the AC power source cord is 0 V and that there is no chance that the cord might become active during the removal process.

2. Attach an electrostatic discharge (ESD) grounding strap to your bare wrist, and connect the strap to one of the ESD points on the chassis.

Copyright © 2019, Juniper Networks, Inc.

3. Switch the power switch on the power supply faceplate to the standby position.

NOTE: **After powering off a power supply, wait at least 60 seconds before turning it back on.**

4. Remove the ESD grounding strap from the ESD point on the chassis, and attach it to an approved site ESD grounding point. See the instructions for your site.

5. Disconnect the AC power cord (see Figure 215 on page 421 from the power source.

Figure 215: Three-Phase Delta AC Power Supply

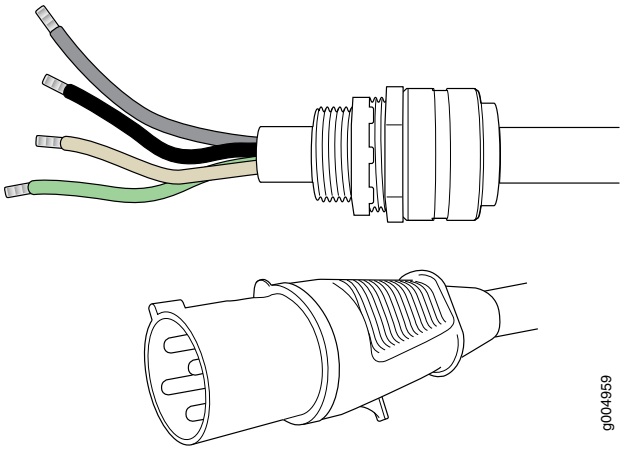

6. Remove the ESD grounding strap from the approved site ESD grounding point. See the instructions for your site. Reconnect the strap to one of the ESD points on the chassis.

7. Using a number 2 Phillips (+) screwdriver, loosen the two screws on the door of the metal wiring compartment that protects the AC terminal block.

8. Open the door of the metal wiring compartment.

Copyright © 2019, Juniper Networks, Inc.

9. Disconnect the wires from the AC terminal block on the three-phase delta AC power supply (Figure 216 on page 422). Loosen each of the input terminals or grounding point screws, and remove each wire from the grounding point or input terminal.

   NOTE: The terminal connections have either slotted screws or hex screws. Use a 1/4-in. slotted screwdriver for the slotted screws. Use a 5/32-in (4-mm) Allen wrench for the 5/16-in hex screws.

   a. Remove the wire labeled **L3** from the **L3** input terminal.

   b. Remove the wire labeled **L2** from the **L2** input terminal.

   c. Remove the wire labeled **L1** from the **L1** input terminal.

   d. Remove the wire labeled **GND** from the grounding point labeled **GND**.

Figure 216: Disconnecting the Power Cord from a Three-Phase Delta AC Power Supply

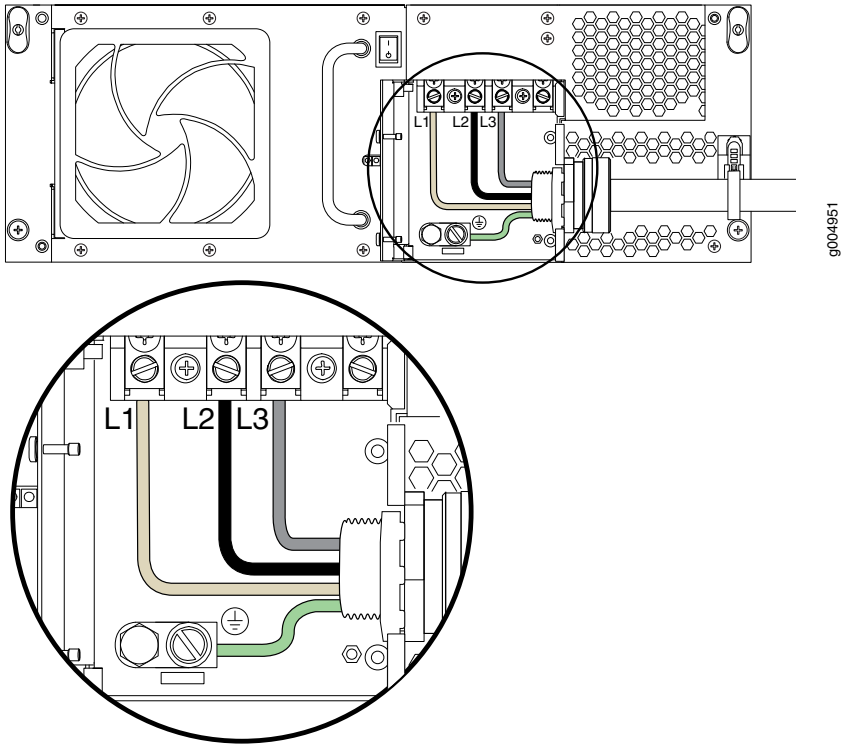

10. Loosen the plastic cable tie fastening the AC power cord to the power supply.

11. Loosen and remove the retaining nut from the AC power cord.

Copyright © 2019, Juniper Networks, Inc.

12. Pull the AC power cord out of the metal wiring compartment.

13. Carefully move the AC power cable out of the way.

14. Disconnect the AC power cord from the AC power supply.

See Also

- T640 Three-Phase Delta and Wye AC Power Supply Description on page 114
- T640 Three-Phase Delta and Wye AC Power Supply LEDs on page 117
- Troubleshooting the T640 Power System on page 498
- T640 Preventing Electrostatic Discharge Damage on page 528

Installing a T640 Three-Phase Delta AC Power Supply Cord

To install a three-phase delta AC power supply cord:

1. Make sure that the voltage across the AC power source cord leads is 0 V and that there is no chance that the cord might become active during installation.

2. Attach an electrostatic discharge (ESD) grounding strap to your bare wrist, and connect the strap to one of the ESD points on the chassis.

3. Switch the power switch on the power supply faceplate to the standby position.

4. Using a number 2 Phillips (+) screwdriver, loosen the two screws on the door of the metal wiring compartment that protects the AC terminal block.

5. Open the door of the metal wiring compartment.

6. Unscrew the retaining nut from the AC power cord.

7. Place the retaining nut inside the metal wiring compartment.

8. Put the wires of the AC power cord through the hole of the metal wiring compartment.

9. Screw the retaining nut onto the AC power cord to secure it to the metal wiring compartment.

Copyright © 2019, Juniper Networks, Inc.

10. Insert the wires to the AC terminal block on the three-phase delta AC power supply (Figure 217 on page 425). Loosen each of the input terminal or grounding point screws, and insert the wire into the grounding point or input terminal.

    NOTE: **The terminal connections have either slotted screws or hex screws. Use a 1/4-in. slotted screwdriver for the slotted screws. Use a 5/32-in (4-mm) Allen wrench for the 5/16-in hex screws.**

    a. Insert the wire labeled **GND** into the grounding point labeled **GND**.

    b. Insert the wire labeled **L1** into the **L1** input terminal

    c. Insert the wire labeled **L2** into the **L2** input terminal.

    d. Insert the wire labeled **LC3** into the **LC3** input terminal.

11. Verify that the power cord wire connections are correct.

12. Using a number 2 Phillips (+) screwdriver, tighten the two captive screws on the metal AC wiring compartment.

13. Verify that the AC power cord is not touching or blocking access to router components, and that it does not drape where people could trip on it.

14. Remove the ESD grounding strap from the ESD points on the chassis. Connect the strap to an approved site ESD grounding point. See the instructions for your site.

15. Connect the AC power cord plug to the power source.

16. Switch on the customer site circuit breakers to provide voltage to the AC power cord.

17. Remove the ESD grounding strap from the approved site ESD grounding point. See the instructions for your site. Reconnect the strap to one of the ESD points on the chassis.

18. Verify that the **AC OK** LED on the power supply faceplate is lit steadily, indicating that the AC terminal block is receiving power.

Copyright © 2019, Juniper Networks, Inc.

19. Switch the power switch on the power supply to the **ON** position (**|**) to provide power to the router components.

20. Verify that the **DC OK** LED on the power supply faceplate is lit steadily, indicating that the power supply is correctly installed and is functioning properly. The **DC OK** LED blinks momentarily, then lights steadily.

NOTE: After a power supply is powered on, it can take up to 60 seconds for status indicators—such as the LEDs on the power supply, the command output displays, and messages on the LED display on the craft interface—to indicate that the power supply is functioning normally. Ignore error indicators that appear during the first 60 seconds.

Figure 217: Connecting Power to a Three-Phase Delta AC Power Supply

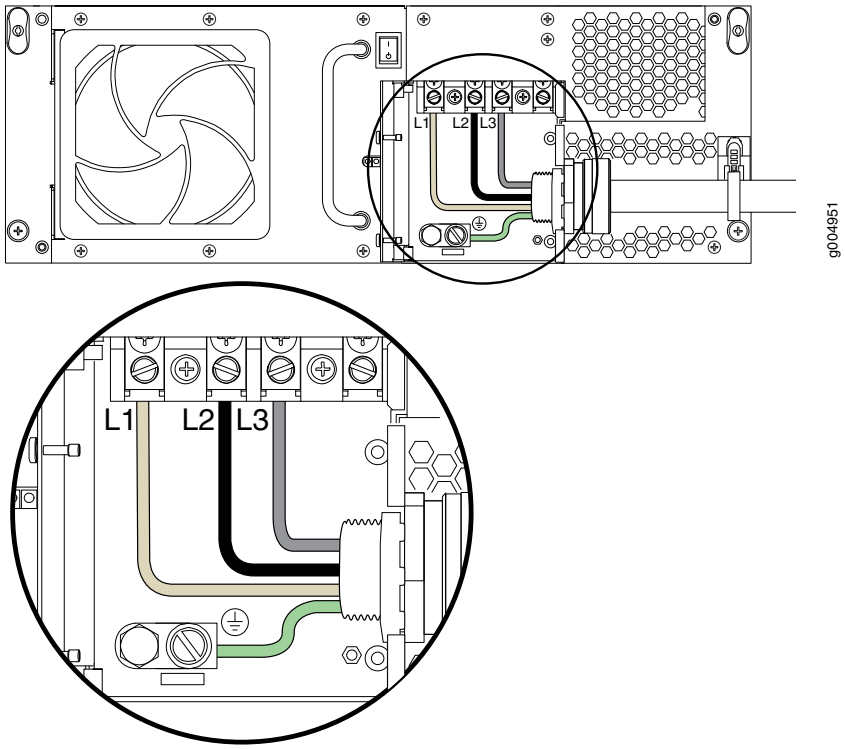

See Also

- T640 Three-Phase Delta and Wye AC Power Supply Description on page 114
- T640 Three-Phase Delta and Wye AC Power Supply LEDs on page 117
- Troubleshooting the T640 Power System on page 498
- T640 Preventing Electrostatic Discharge Damage on page 528

Copyright © 2019, Juniper Networks, Inc.

Related Documentation

- T640 Three-Phase Delta and Wye AC Power Supply Description on page 114
- T640 Three-Phase Delta and Wye AC Power Supply LEDs on page 117
- Troubleshooting the T640 Power System on page 498
- T640 Preventing Electrostatic Discharge Damage on page 528
- T640 AC Power Cord Specifications on page 147

Replacing a T640 Three-Phase Wye AC Power Supply

1. Removing a T640 Three-Phase Wye AC Power Supply on page 426
2. Installing a T640 Three-Phase Wye AC Power Supply on page 429

Removing a T640 Three-Phase Wye AC Power Supply

To remove a three-phase wye AC power supply:

1. Switch off the customer site circuit breakers to the power supply being removed. Make sure that the voltage across the AC power source cord is 0 V and that there is no chance that the power cord might become active during the removal process.

2. Attach an electrostatic discharge (ESD) grounding strap to your bare wrist, and connect the strap to one of the ESD points on the chassis.

3. Switch the power switch on the power supply faceplate to the standby position.

   NOTE: **After powering off a power supply, wait at least 60 seconds before turning it back on.**

4. Remove the ESD grounding strap from the ESD point on the chassis, and attach it to an approved site ESD grounding point. See the instructions for your site.

5. Disconnect the AC power cord (see Figure 218 on page 427) from the power source.

Copyright © 2019, Juniper Networks, Inc.

Figure 218: Three-Phase Wye AC Power Supply

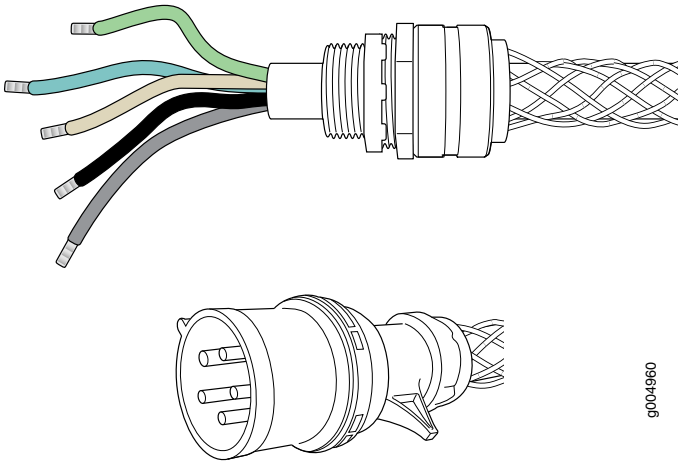

6. Remove the ESD grounding strap from the approved site ESD grounding point. See the instructions for your site. Reconnect the strap to one of the ESD points on the chassis.

7. Using a number 2 Phillips (+) screwdriver, unscrew the two screws on the metal cover protecting the AC terminal block.

8. Disconnect the wires from the AC terminal block and grounding point on the three-phase wye AC power supply (Figure 219 on page 428), loosen each screw, and remove each wire from the grounding point or input terminal.

   NOTE: **The terminal connections have either slotted screws or hex screws. Use a 1/4-in. slotted screwdriver for the slotted screws. Use a 5/32-in (4-mm) Allen wrench for the 5/16-in hex screws.**

   a. Remove the wire labeled **N** from the **N** input terminal

   b. Remove the wire labeled **L3** from the **L3** input terminal.

   c. Remove the wire labeled **L2** from the **L2** input terminal.

   d. Remove the wire labeled **L1** from the **L1** input terminal.

   e. Remove the wire labeled **GND** from the grounding point labeled **GND**.

Figure 219: Disconnecting the AC Power Cord from a Three-Phase Wye AC Power Supply

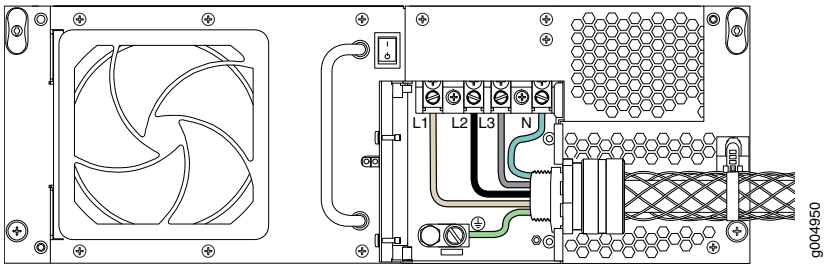

9. Loosen the plastic cable tie fastening the AC power cord to the power supply.

10. Loosen and remove the retaining nut from the AC power cord.

11. Pull the AC power cord out of the metal wiring compartment.

12. Carefully move the AC power cable out of the way.

13. Loosen the captive screws on the lower corners of the power supply faceplate completely.

14. Twist the ejector handles on the upper corners of the faceplate counterclockwise to unseat the power supply.

Copyright © 2019, Juniper Networks, Inc.

15. Grasp the handle on the power supply faceplate and pull firmly. Slide it halfway out of the chassis (see Figure 220 on page 429).

CAUTION: **Each three-phase wye AC power supply weighs approximately 31.0 lb (14.06 kg). Be prepared to support the full weight of the power supply as you remove it from the router.**

16. Place one hand underneath the power supply to support it and slide it completely out of the chassis.

Figure 220: Removing a Three-Phase Wye AC Power Supply

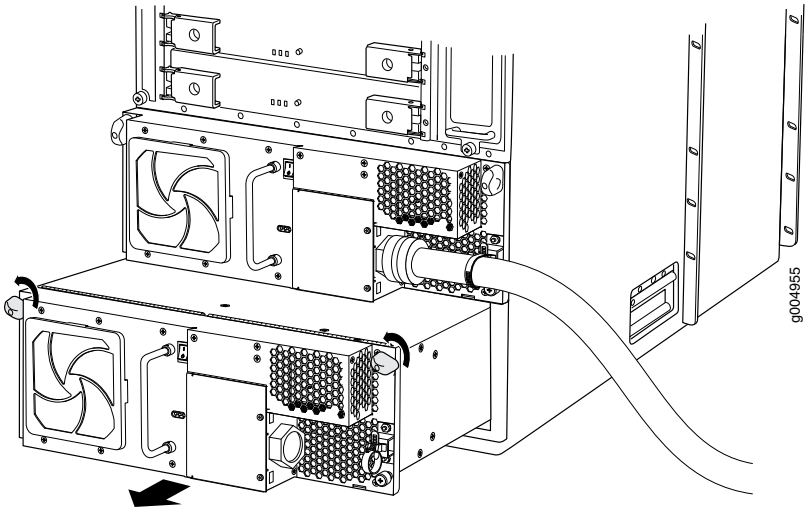

See Also

- T640 Three-Phase Delta and Wye AC Power Supply Description on page 114
- T640 Three-Phase Delta and Wye AC Power Supply LEDs on page 117
- Troubleshooting the T640 Power System on page 498
- T640 Preventing Electrostatic Discharge Damage on page 528

Installing a T640 Three-Phase Wye AC Power Supply

Each three-phase wye AC power supply weighs approximately 31.0 lb (14.06 kg). To install a three-phase wye AC power supply:

1. Make sure that the voltage across the AC power cord leads is 0 V and that there is no chance that the power cord might become active during installation.

2. Attach an electrostatic discharge (ESD) grounding strap to your bare wrist, and connect the strap to one of the ESD points on the chassis.

3. Switch the power switch on the power supply faceplate to the standby position.

4. Using both hands, slide the power supply into the chassis until you feel resistance (see Figure 222 on page 432).

5. Twist the ejector handles at the upper corners of the power supply faceplate clockwise until they stop.

6. Tighten the captive screws at the lower corners of the power supply faceplate to secure the power supply in the chassis.

7. Using a slotted screwdriver, loosen the two screws securing the door of the metal wiring compartment.

8. Open the door of the metal wiring compartment.

9. Place the retaining screw into the metal wiring compartment.

10. Unscrew the retaining nut from the AC power cord.

11. Place the retaining nut inside the metal wiring compartment.

12. Put the wires of the AC power cord through the hole of the metal wiring compartment.

13. Screw the retaining nut onto the AC power cord to secure it to the metal wiring compartment.

Copyright © 2019, Juniper Networks, Inc.

14. Connect the AC power cord wires to ground and the AC terminal block on the three-phase wye AC power supply (Figure 221 on page 431). Loosen each of the input terminals or grounding point screws, insert each wire into the grounding point or input terminal, and tighten the screw.

    NOTE: The terminal connections have either slotted screws or hex screws. Use a 1/4-in. slotted screwdriver for the slotted screws. Use a 5/32-in (4-mm) Allen wrench for the 5/16-in hex screws.

    a. Insert the wire labeled **GND** into the grounding point labeled **GND**.

    b. Insert the wire **L1** into the **L1** input terminal.

    c. Insert the wire labeled **L2** into the **L2** input terminal.

    d. Insert the wire labeled **L3** into the **L3** input terminal.

    e. Insert the wire labeled **N** into the **N** input terminal

Figure 221: Connecting Power to the Three–Phase Wye AC Power Supply

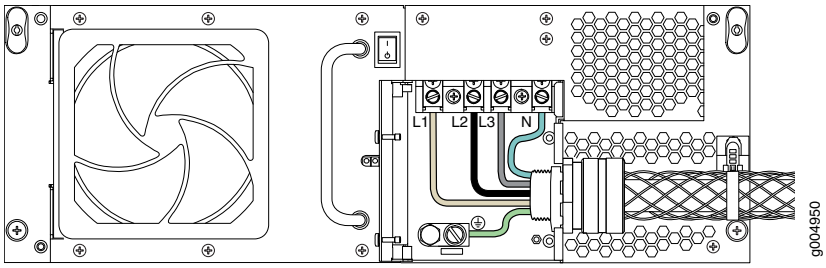

15. Verify that the power cord wire connections are correct.

16. Using a number 2 Phillips (+) screwdriver, tighten the two captive screws on the metal AC wiring compartment.

17. Place the AC power cord into the plastic tie located on the right side of the power supply, and fasten the plastic tie.

18. Verify that the AC power cord is not touching or blocking access to router components, and that it does not drape where people could trip on it.

19. Remove the ESD grounding strap from the ESD points on the chassis. Connect the strap to an approved site ESD grounding point. See the instructions for your site.

Copyright © 2019, Juniper Networks, Inc.

20. Connect the AC power cord to the AC power source.

21. Switch on the customer site circuit breakers to provide voltage to the AC power source cables.

22. Remove the ESD grounding strap from the approved site ESD grounding point. See the instructions for your site. Reconnect the strap to one of the ESD points on the chassis.

23. Verify that the **AC OK** LED on the power supply faceplate is lit steadily, indicating that the AC terminal block is receiving power.

24. Switch the power switch on the power supply to the **ON** position (**|**).

25. Verify that the **DC OK** LED on the power supply faceplate is lit steadily, indicating that the power supply is correctly installed and is functioning properly. The **DC OK** LED blinks momentarily, then lights steadily.

NOTE: After a power supply is powered on, it can take up to 60 seconds for status indicators—such as the LEDs on the power supply, the command output displays, and messages on the LED display on the craft interface—to indicate that the power supply is functioning normally. Ignore error indicators that appear during the first 60 seconds.

Figure 222: Installing a Three-Phase Wye AC Power Supply

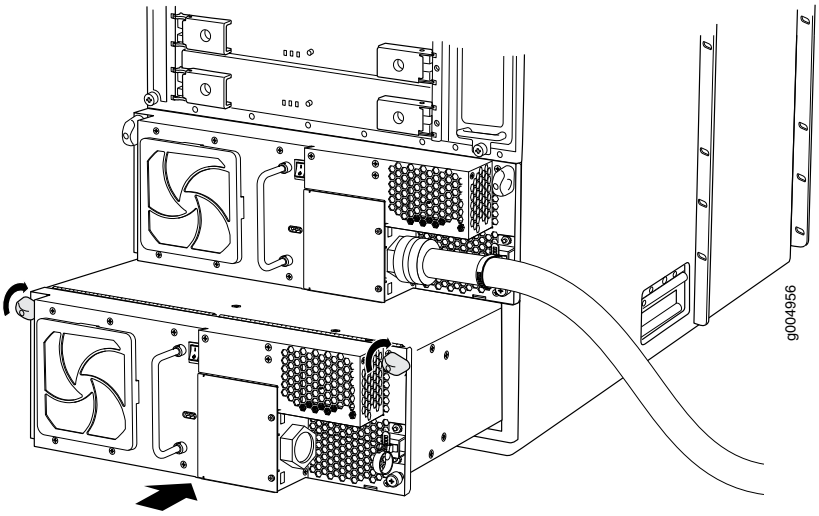

See Also

- T640 Three-Phase Delta and Wye AC Power Supply Description on page 114
- T640 Three-Phase Delta and Wye AC Power Supply LEDs on page 117

Copyright © 2019, Juniper Networks, Inc.

- Troubleshooting the T640 Power System on page 498
- T640 Preventing Electrostatic Discharge Damage on page 528

Related Documentation

- T640 Three-Phase Delta and Wye AC Power Supply Description on page 114
- T640 Three-Phase Delta and Wye AC Power Supply LEDs on page 117
- Troubleshooting the T640 Power System on page 498
- T640 Preventing Electrostatic Discharge Damage on page 528

Replacing a T640 Three-Phase Wye AC Power Supply Cord

1. Removing a T640 Three-Phase Wye AC Power Supply Cord on page 433
2. Installing a T640 Three-Phase Wye AC Power Supply Cord on page 436

Removing a T640 Three-Phase Wye AC Power Supply Cord

To remove a three-phase wye AC power supply cord:

1. Switch off the customer site circuit breakers to the power supply being removed. Make sure that the voltage across the AC power source cord is 0 V and that there is no chance that the power cord might become active during the removal process.

2. Attach an electrostatic discharge (ESD) grounding strap to your bare wrist, and connect the strap to one of the ESD points on the chassis.

3. Switch the power switch on the power supply faceplate to the standby position.

   NOTE: **After powering off a power supply, wait at least 60 seconds before turning it back on.**

4. Remove the ESD grounding strap from the ESD point on the chassis, and attach it to an approved site ESD grounding point. See the instructions for your site.

5. Disconnect the AC power cord (see Figure 223 on page 434) from the power source.

Figure 223: Three-Phase Wye AC Power Supply

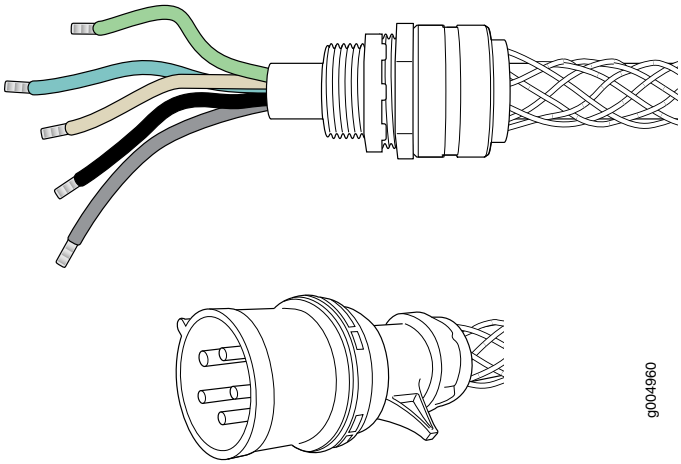

6. Remove the ESD grounding strap from the approved site ESD grounding point. See the instructions for your site. Reconnect the strap to one of the ESD points on the chassis.

7. Using a number 2 Phillips (+) screwdriver, unscrew the two screws on the metal cover protecting the AC terminal block.

Copyright © 2019, Juniper Networks, Inc.

8. Disconnect the wires from the AC terminal block and grounding point on the three-phase wye AC power supply (Figure 224 on page 435), loosen each screw, and remove each wire from the grounding point or input terminal.

   NOTE: The terminal connections have either slotted screws or hex screws. Use a 1/4-in. slotted screwdriver for the slotted screws. Use a 5/32-in (4-mm) Allen wrench for the 5/16-in hex screws.

   a. Remove the wire labeled **N** from the **N** input terminal

   b. Remove the wire labeled **L3** from the **L3** input terminal.

   c. Remove the wire labeled **L2** from the **L2** input terminal.

   d. Remove the wire labeled **L1** from the **L1** input terminal.

   e. Remove the wire labeled **GND** from the grounding point labeled **GND**.

Figure 224: Disconnecting the AC Power Cord from a Three-Phase Wye AC Power Supply

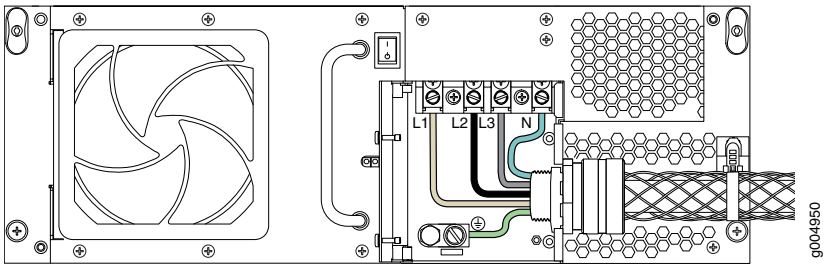

9. Loosen the plastic cable tie fastening the AC power cord to the power supply.

10. Loosen and remove the retaining nut from the AC power cord.

11. Pull the AC power cord out of the metal wiring compartment.

12. Carefully move the AC power cable out of the way.

See Also

- T640 Three-Phase Delta and Wye AC Power Supply Description on page 114
- T640 Three-Phase Delta and Wye AC Power Supply LEDs on page 117
- Troubleshooting the T640 Power System on page 498
- T640 Preventing Electrostatic Discharge Damage on page 528

Copyright © 2019, Juniper Networks, Inc.

Installing a T640 Three-Phase Wye AC Power Supply Cord

To install a three-phase wye AC power supply cord:

1. Make sure that the voltage across the AC power cord leads is 0 V and that there is no chance that the power cord might become active during installation.
2. Attach an electrostatic discharge (ESD) grounding strap to your bare wrist, and connect the strap to one of the ESD points on the chassis.
3. Switch the power switch on the power supply faceplate to the standby position.
4. Using a slotted screwdriver, loosen the two screws securing the door of the metal wiring compartment.
5. Open the door of the metal wiring compartment.
6. Place the retaining screw into the metal wiring compartment.
7. Unscrew the retaining nut from the AC power cord.
8. Place the retaining nut inside the metal wiring compartment.
9. Put the wires of the AC power cord through the hole of the metal wiring compartment.
10. Screw the retaining nut onto the AC power cord to secure it to the metal wiring compartment.

Copyright © 2019, Juniper Networks, Inc.

11. Connect the AC power cord wires to ground and the AC terminal block on the three-phase wye AC power supply (Figure 225 on page 437). Loosen each of the input terminals or grounding point screws, insert each wire into the grounding point or input terminal, and tighten the screw.

    NOTE: The terminal connections have either slotted screws or hex screws. Use a 1/4-in. slotted screwdriver for the slotted screws. Use a 5/32-in (4-mm) Allen wrench for the 5/16-in hex screws.

    a. Insert the wire labeled **GND** into the grounding point labeled **GND**.

    b. Insert the wire **L1** into the **L1** input terminal.

    c. Insert the wire labeled **L2** into the **L2** input terminal.

    d. Insert the wire labeled **L3** into the **L3** input terminal.

    e. Insert the wire labeled **N** into the **N** input terminal

Figure 225: Connecting Power to the Wye 3–Phase AC Power Supply

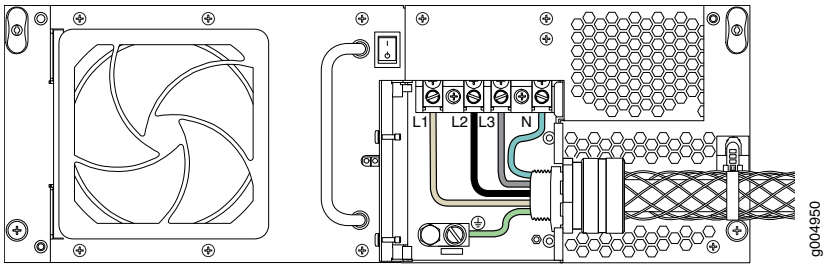

12. Verify that the power cord wire connections are correct.

13. Using a number 2 Phillips (+) screwdriver, tighten the two captive screws on the metal AC wiring compartment.

14. Place the AC power cord into the plastic tie located on the right side of the power supply, and fasten the plastic tie.

15. Verify that the AC power cord is not touching or blocking access to router components, and that it does not drape where people could trip on it.

16. Remove the ESD grounding strap from the ESD points on the chassis. Connect the strap to an approved site ESD grounding point. See the instructions for your site.

Copyright © 2019, Juniper Networks, Inc.

17. Connect the AC power cord to the AC power source.

18. Switch on the customer site circuit breakers to provide voltage to the AC power source cables.

19. Remove the ESD grounding strap from the approved site ESD grounding point. See the instructions for your site. Reconnect the strap to one of the ESD points on the chassis.

20. Verify that the **AC OK** LED on the power supply faceplate is lit steadily, indicating that the AC terminal block is receiving power.

21. Switch the power switch on the power supply to the **ON** position (**|**).

22. Verify that the **DC OK** LED on the power supply faceplate is lit steadily, indicating that the power supply is correctly installed and is functioning properly. The **DC OK** LED blinks momentarily, then lights steadily.

NOTE: After a power supply is powered on, it can take up to 60 seconds for status indicators—such as the LEDs on the power supply, the command output displays, and messages on the LED display on the craft interface—to indicate that the power supply is functioning normally. Ignore error indicators that appear during the first 60 seconds.

See Also

- T640 Three-Phase Delta and Wye AC Power Supply Description on page 114
- T640 Three-Phase Delta and Wye AC Power Supply LEDs on page 117
- Troubleshooting the T640 Power System on page 498
- T640 Preventing Electrostatic Discharge Damage on page 528

Related Documentation

- T640 Three-Phase Delta and Wye AC Power Supply Description on page 114
- T640 Three-Phase Delta and Wye AC Power Supply LEDs on page 117
- Troubleshooting the T640 Power System on page 498
- T640 Preventing Electrostatic Discharge Damage on page 528
- T640 AC Power Cord Specifications on page 147

Copyright © 2019, Juniper Networks, Inc.

CHAPTER 30

Replacing Switch Fabric Components

- Replacing a T640 SFP on page 439
- Replacing a T640 SIB on page 443
- Upgrading to a T640 Standard SIB Version B on page 452
- Replacing a T640 XENPAK Module on page 454

Replacing a T640 SFP

1. Removing a T640 SFP on page 440
2. Installing a T640 SFP on page 441

Removing a T640 SFP

Small form-factor pluggables (SFPs) are transceivers that can be removed from a PIC. SFPs are hot-insertable and hot-removable. Removing an SFP does not interrupt PIC functioning, but the removed SFP no longer receives or transmits data.

NOTE: When you remove a PIC transceiver, the router continues to function, although the PIC interface being removed no longer functions.

Figure 226: Small Form-Factor Pluggable (SFP)

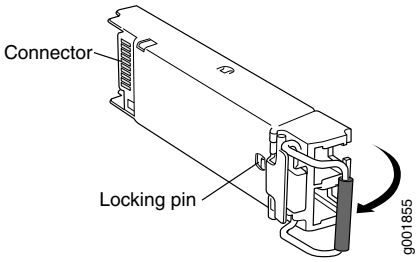

NOTE: This procedure applies to both SFP and SFP+ transceivers.

To remove an SFP transceiver (see Figure 226 on page 440):

1. Place an electrostatic bag or antistatic mat on a flat, stable surface to receive the SFP. Have ready a rubber safety cap for the SFP transceiver and the cable.

2. Attach an electrostatic discharge (ESD) grounding strap to your bare wrist, and connect the strap to one of the ESD points on the chassis.

3. Label the cable connected to the SFP so that you can later reconnect it to the correct SFP.

4. Disconnect the cable from the SFP. Immediately cover the transceiver and the end of the cable with a rubber safety cap.

WARNING: Do not look directly into a fiber-optic transceiver or into the ends of fiber-optic cables. Fiber-optic transceivers and fiber-optic cable connected to a transceiver emit laser light that can damage your eyes.

CAUTION: Do not leave a fiber-optic transceiver uncovered except when inserting or removing cable. The safety cap keeps the port clean and prevents accidental exposure to laser light.

Copyright © 2019, Juniper Networks, Inc.

5. Arrange the cable in the cable management system to prevent it from dislodging or developing stress points. Secure the cable so that it is not supporting its own weight as it hangs to the floor. Place excess cable out of the way in a neatly coiled loop in the cable management system. Placing fasteners on the loop helps to maintain its shape.

   CAUTION: **Avoid bending fiber-optic cable beyond its minimum bend radius. An arc smaller than a few inches in diameter can damage the cable and cause problems that are difficult to diagnose.**

6. Pull the ejector handle away from the SFP faceplate to unseat the SFP from the PIC. Pull the SFP out of the PIC, and place it on the antistatic mat or in the electrostatic bag.

   CAUTION: **After removing a transceiver from the chassis, wait at least 30 seconds before reinserting it or inserting a transceiver into a different slot.**

See Also

- T640 Chassis Description on page 15
- T640 PIC Description on page 85
- T640 Packet Forwarding Engine Architecture on page 7

Installing a T640 SFP

To install a replacement SFP:

1. Attach an electrostatic discharge (ESD) grounding strap to your bare wrist, and connect the strap to one of the ESD points on the chassis.

2. Verify that a rubber safety cap covers the SFP transceiver, installing one if necessary.

3. Orient the SFP over the port in the PIC so that the connector end will enter the slot first and the SFP connector faces the appropriate direction:
   - If the PIC has ten SFP ports, the ports are arranged in two columns. The SFP connector faces to the right for ports in the left column, and to the left for ports in the right column.
   - If the PIC has one or two SFP ports, the SFP connector faces to the left.
4. Slide the SFP into the slot. If there is resistance, remove the SFP and flip it so that the connector faces the other direction.

5. Remove the rubber safety cap from the transceiver and the end of the cable, and insert the cable into the transceiver.

Copyright © 2019, Juniper Networks, Inc.

WARNING: Do not look directly into a fiber-optic transceiver or into the ends of fiber-optic cables. Fiber-optic transceivers and fiber-optic cable connected to a transceiver emit laser light that can damage your eyes.

CAUTION: Do not leave a fiber-optic transceiver uncovered except when inserting or removing cable. The safety cap keeps the port clean and prevents accidental exposure to laser light.

6. Arrange the cable in the cable management system to prevent the cable from dislodging or developing stress points. Secure the cable so that it is not supporting its own weight as it hangs to the floor. Place excess cable out of the way in a neatly coiled loop in the cable management system. Placing fasteners on the loop helps to maintain its shape.

   CAUTION: Do not let fiber-optic cable hang free from the connector. Do not allow fastened loops of cable to dangle, which stresses the cable at the fastening point.

   CAUTION: Avoid bending fiber-optic cable beyond its minimum bend radius. An arc smaller than a few inches in diameter can damage the cable and cause problems that are difficult to diagnose.

7. Verify that the status LEDs on the PIC faceplate indicate that the SFP is functioning correctly (there is an LED for each SFP port). For more information about the PIC LEDs, see the interface module reference for your device. You can also verify PIC functioning by issuing the **show chassis fpc pic-status** command.

See Also

- T640 Preventing Electrostatic Discharge Damage on page 528
- T640 PIC Description on page 85
- T640 Packet Forwarding Engine Architecture on page 7

Related Documentation

- T640 Preventing Electrostatic Discharge Damage on page 528
- T640 PIC Description on page 85
- T640 Packet Forwarding Engine Architecture on page 7

Copyright © 2019, Juniper Networks, Inc.

Replacing a T640 SIB

Five SIBs are installed in the T640 router. The SIBs are located in the rear of the chassis in the slots marked **SIB0** through **SIB4**. Each SIB weighs approximately 6.8 lb (3.1 kg).

SIBs are hot-insertable and hot-removable.

NOTE: SIB version B is supported in Junos OS Release 7.3 and later. You can use a SIB or SIB version B in a chassis running Junos 7.3 or later, but you cannot use both on the same chassis at the same time.

If you use one or more FPC4s or Enhanced Scaling FPCs in a T640 router that is not part of a routing matrix, each SIB in the router must be a SIB version B.

NOTE: The T640-SIB requires Junos OS Release 7.0 or later.

To replace a SIB, perform the following procedures:

1. Removing a T640 Standard SIB or Standard SIB Version B on page 443
2. Installing a T640 Standard SIB or Standard SIB Version B on page 444
3. Upgrading to a T640 Standard SIB Version B on page 446
4. Removing a T640-SIB on page 448
5. Installing a T640-SIB on page 450

Removing a T640 Standard SIB or Standard SIB Version B

NOTE: If you are upgrading to standard SIB version B or T640-SIBs, see "Upgrading to a T640 Standard SIB Version B" on page 446 or the *TX Matrix Router Hardware Guide* for T640-SIBs before removing the SIBs.

To remove a standard SIB or standard SIB version B (see Figure 227 on page 444):

1. Place an electrostatic bag or antistatic mat on a flat, stable surface.
2. Attach an electrostatic discharge (ESD) grounding strap to your bare wrist, and connect the strap to one of the ESD points on the chassis.
3. Press the online/offline button on the SIB faceplate. Press and hold down the button until the green **OK** LED goes out (about 5 seconds).
4. Loosen the captive screws (using a Phillips (+) screwdriver, number 2) on the ejector handles on each side of the SIB faceplate.

Copyright © 2019, Juniper Networks, Inc.

5. Flip the ejector handles outward to unseat the SIB.

6. Grasp both ejector handles, pull firmly, and slide the SIB about three-quarters of the way out of the chassis.

7. Place one hand underneath the SIB to support it and slide it completely out of the chassis. Place it on the antistatic mat.

CAUTION: **Do not stack hardware components on one another after you remove them. Place each component on an antistatic mat resting on a stable, flat surface.**

Figure 227: Removing a SIB

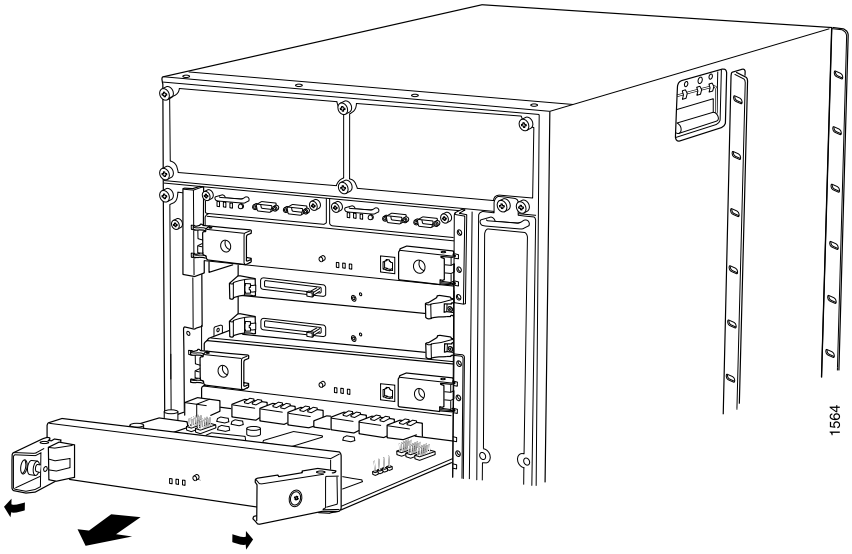

See Also

- T640 Switch Interface Boards (SIBs) Description on page 119
- Maintaining the T640 SIBs on page 481
- Upgrading to a T640 Standard SIB Version B on page 446
- T640 Preventing Electrostatic Discharge Damage on page 528

Installing a T640 Standard SIB or Standard SIB Version B

To install a SIB into the rear of the chassis (see Figure 228 on page 445):

Copyright © 2019, Juniper Networks, Inc.

1. Attach an electrostatic discharge (ESD) grounding strap to your bare wrist, and connect the strap to one of the ESD points on the chassis.

2. Place one hand underneath the SIB to support it. With the other hand, hold one of the ejector handles on the SIB faceplate.

3. Carefully align the sides of the SIB with the guides inside the chassis.

4. Slide the SIB into the chassis, carefully ensuring that it is correctly aligned.

5. Grasp both ejector handles and press them inward to seat the SIB.

6. Tighten the captive screws on the ejector handles.

7. Press the offline/online button until the green **OK** LED blinks to bring the SIB online.

8. Check the LEDs on the SIB faceplate to verify that it is functioning normally:
   - The green **OK** LED should light steadily a few minutes after the SIB is installed.
   - If the **FAIL** LED is lit steadily, remove and install the SIB again (see "Removing a T640-SIB" on page 448 and "Installing a T640-SIB" on page 450). If the **FAIL** LED still lights steadily, the SIB is not functioning properly. Contact your customer support representative.
9. Check the status of the SIB. Issue the following CLI command:

   ```
   user@host> show chassis environment sib
   ```

Figure 228: Installing a SIB

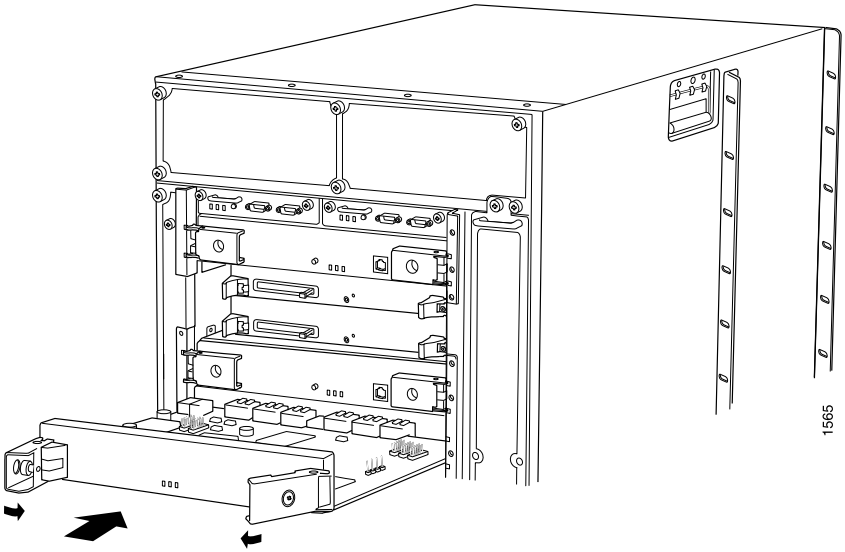

See Also

- T640 Switch Interface Boards (SIBs) Description on page 119
- Maintaining the T640 SIBs on page 481
- Upgrading to a T640 Standard SIB Version B on page 446
- T640 Preventing Electrostatic Discharge Damage on page 528

Upgrading to a T640 Standard SIB Version B

NOTE: Before you install one or more FPC4s in a T640 router that is not part of a routing matrix, you must replace each SIB in the router with a SIB version B.

SIB version B is supported in Junos OS Release 7.3 and later.

Standard SIBs and SIB version B cannot be installed in the same chassis at the same time, except during upgrade. To upgrade to standard SIB version B, you prepare the router by placing it into upgrade mode, then replace each standard SIB with a standard SIB version B.

NOTE: During the upgrade, the T640 router might experience some packet loss, depending on the operational environment. For more information, contact your customer support representative.

To upgrade for each of the SIBs in the T640 router:

1. Preparing to Upgrade to a T640 Standard SIB Version B on page 446
2. Replacing T640 Standard SIBs with Standard SIB Version B on page 447

Preparing to Upgrade to a T640 Standard SIB Version B

To prepare to upgrade from standard SIBs to standard SIB version B:

1. Verify that you are running Junos OS Release 7.3 or later.

2. Include the **fabric upgrade-mode** statement in the configuration at the **[edit chassis]** hierarchy level.

   ```
   user@host# set chassis fabric upgrade-mode
   ```

3. Commit the configuration on both the master and the backup Routing Engines.

   ```
   user@host# commit synchronize
   ```

4. Display the status of the T640 router SIBs by issuing the **show chassis sibs** command:

Copyright © 2019, Juniper Networks, Inc.

```
user@host> show chassis sibs
Slot  State              Uptime
 0    Spare           255 days, 31 minutes, 12 seconds
 1    Online          255 days, 31 minutes, 12 seconds
 2    Online          255 days, 31 minutes, 12 seconds
 3    Online          255 days, 31 minutes, 12 seconds
 4    Online          255 days, 31 minutes, 12 seconds
```

Verify that four SIBs are in the **Online** state. If five SIBs are installed, verify that one SIB is in the **Spare** state. To bring a SIB online, issue the **request chassis sib online** operational mode command.

See Also

- T640 Chassis Description on page 15
- T640 Switch Interface Boards (SIBs) Description on page 119
- Maintaining the T640 SIBs on page 481

Replacing T640 Standard SIBs with Standard SIB Version B

To replace the T640 standard SIBs with Standard SIB Version B, perform the following procedures:

1. Attach an electrostatic discharge (ESD) grounding strap to your bare wrist, and connect the strap to one of the ESD points on the chassis.

2. Select one of the SIBs to replace, and take it offline by using one of the following methods:

   - Press and hold the **ONLINE/OFFLINE** button on the SIB faceplate for about five seconds until the **OK** LED is not lit.
   - Issue the **request chassis sib offline** command. For example:

     ```
     user@host> request chassis sib offline slot 0
     ```

     NOTE: When you bring an active SIB offline, the spare SIB becomes active and transitions to the Online state.

3. Replace the SIB with a standard SIB version B. Use the replacement procedures described in "Removing a T640 Standard SIB or Standard SIB Version B" on page 443 and "Installing a T640 Standard SIB or Standard SIB Version B" on page 444

   NOTE: Ensure that the ejector handle tabs are properly mated inside their corresponding chassis slots before you tighten the captive screws on the ejector handles. You might have to close and open the handles a few times before the tabs catch the slots.

See Also

- T640 Chassis Description on page 15
- T640 Switch Interface Boards (SIBs) Description on page 119
- Maintaining the T640 SIBs on page 481
- T640 Preventing Electrostatic Discharge Damage on page 528

Related Documentation

- T640 Chassis Description on page 15
- T640 Switch Interface Boards (SIBs) Description on page 119
- Maintaining the T640 SIBs on page 481

Removing a T640-SIB

To remove a T640-SIB (see "Removing a T640 Standard SIB or Standard SIB Version B" on page 443):

1. Have ready a replacement SIB or blank panel, an antistatic mat, and one dust cover for the fiber-optic array cable connector you remove from the T640-SIB.

2. Attach an electrostatic discharge (ESD) grounding strap to your bare wrist, and connect the strap to an approved ESD grounding point.

3. Ensure that the fiber-optic array cable connectors plugged into the T640-SIB are labeled so you can reconnect them correctly.

4. Use one of the following methods to take the T640-SIB offline:

   - Issue the following CLI command:

     `user@host>` **request chassis sib lcc *number* offline slot** *`slot-number`*

     For more information about the command, see *request chassis sib*.

   - Press and hold the online/offline button on the craft interface that corresponds to the T640-SIB. Hold the button down until all of the LEDs surrounding the button are not lit.

5. Remove the fiber-optic array cable connector from the fiber-optic array on the faceplate of theT640-SIB.

WARNING: **Do not look directly into a connector at the end of a fiber-optic adapter orfiber-optic array cable connector attached to an adapter. The fiber optics emit laser light that can damage your eyes.**

Copyright © 2019, Juniper Networks, Inc.

6. Install a dust cover on the cable connector you removed from the T640-SIB. Align the dust cover with the cable connector and carefully press them together until they stop. The cover and the cable connector are keyed to ensure proper mating. Secure the dust cover by tightening the thumbscrew and captive screw on the connector. (Use the supplied small slotted screwdriver to tighten the captive screw.)

7. Move the fiber-optic array cables to the side of the T640-SIB so they do not interfere with the removal of the T640-SIB.

8. Simultaneously turn both ejector handles on the top and bottom of the faceplate counterclockwise to unseat the T640-SIB.

9. Grasp both ejector handles, pull firmly, and slide the T640-SIB about three-quarters of the way out of the chassis.

10. Place one hand underneath the T640-SIB to support it and slide it completely out of the chassis. Place it on the antistatic mat.

    CAUTION: **Do not stack hardware components on one another after you remove them. Place each component on an antistatic mat resting on a stable, flat surface.**

11. If you are not reinstalling a SIB into the emptied SIB slot within a short time, install a blank SIB panel over the slot to maintain proper airflow in the SIB card cage.

Figure 229: Removing a SIB

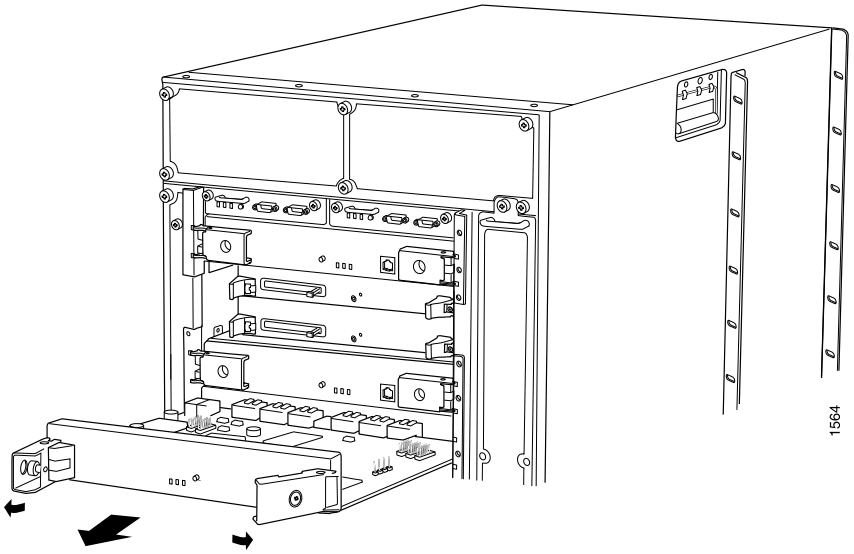

See Also

- T640 Chassis Description on page 15

- T640 Switch Interface Boards (SIBs) Description on page 119
- Maintaining the T640 SIBs on page 481
- T640 Preventing Electrostatic Discharge Damage on page 528

Installing a T640-SIB

Use this procedure to install a T640-SIB in a T640 router that is connected to a TX Matrix platform. To convert the switching plane from standard SIBs to T640-SIBs, see the procedures in the *TX Matrix Router Hardware Guide*.

NOTE: **While you install the T640-SIB or replace a fiber-optic array cable, small deposits of oil and dust can enter the T640-SIB fiber-optic array adapters, the fiber-optic array cable connectors, and the loopback connectors and adapters. We recommend you clean the optics in these components, as well as the loopback connector and adapter dust covers, immediately before connecting them. For cleaning instructions, see the *TX Matrix Router Hardware Guide*.**

To install a T640-SIB into the rear of the chassis (see "Installing a T640 Standard SIB or Standard SIB Version B" on page 444):

1. Attach an electrostatic discharge (ESD) grounding strap to your bare wrist, and connect the strap to one of the ESD points on the chassis.

2. Place one hand under the bottom edge of the T640-SIB and one hand around the top of the T640-SIB faceplate.

3. If applicable, remove the protective tape covering each T640-SIB fiber-optic array adapter.

4. Remove the dust covers from the fiber-optic array cable connectors. To remove a dust cover, loosen the thumbscrew and captive screw on the connector. (Use the supplied small slotted screwdriver to loosen the captive screw.) Store the dust covers in a dust-free resealable plastic bag.

5. Install the cable connector to the fiber-optic array adapter. Align the connector with the fiber-optic array adapter, and carefully press it into the adapter until it stops. The cable connector and adapter are keyed to ensure proper mating.

   NOTE: **The optics in a fiber-optic array adapter are spring loaded, so you must continue to apply force to a fiber-optic array cable connector or loopback connector while securing it to a TX-SIB or T640-SIB adapter.**

Copyright © 2019, Juniper Networks, Inc.

WARNING: **Do not look directly into a fiber-optic array adapter or a connector at the end of a fiber-optic array cable attached to an adapter. The fiber optics emit laser light that can damage your eyes.**

6. Partially tighten the thumbscrew and captive screw on the fiber-optic array cable connector. (Use the supplied small slotted screwdriver to tighten the captive screw.) Alternate between the thumbscrew and captive screw until the cable connector is secured to the adapter.

7. Use one of the following methods to bring the T640-SIB online:
   - Press and hold the online/offline button on the faceplate until the green **OK** LED next to the button blinks.
   - Issue the following CLI command:

     `user@host>` **request chassis sib lcc *number* slot** *`slot-number`* **online**

8. Check the LEDs on the T640-SIB faceplate to verify that the SIB is functioning normally.
   - The green **OK** LED should light steadily a few minutes after the T640-SIB is installed.
   - If the **FAIL** LED is lit steadily, remove and install the T640-SIB again (see "Removing a T640-SIB" on page 448 and this procedure). If the **FAIL** LED still lights steadily, the T640-SIB is not functioning properly. Contact your customer support representative.

9. Check the status of the T640-SIBs. Issue the following CLI commands:

   `user@host>` **show chassis environment sib lcc *number***

   For more information and sample output from these commands, see *show chassis environment sib*.

See Also

- T640 Chassis Description on page 15
- T640 Switch Interface Boards (SIBs) Description on page 119
- Maintaining the T640 SIBs on page 481
- T640 Preventing Electrostatic Discharge Damage on page 528

Related Documentation

- T640 Chassis Description on page 15
- T640 Switch Interface Boards (SIBs) Description on page 119
- Maintaining the T640 SIBs on page 481

Copyright © 2019, Juniper Networks, Inc.

Upgrading to a T640 Standard SIB Version B

NOTE: Before you install one or more FPC4s in a T640 router that is not part of a routing matrix, you must replace each SIB in the router with a SIB version B.

SIB version B is supported in Junos OS Release 7.3 and later.

Standard SIBs and SIB version B cannot be installed in the same chassis at the same time, except during upgrade. To upgrade to standard SIB version B, you prepare the router by placing it into upgrade mode, then replace each standard SIB with a standard SIB version B.

NOTE: During the upgrade, the T640 router might experience some packet loss, depending on the operational environment. For more information, contact your customer support representative.

To upgrade for each of the SIBs in the T640 router:

1. Preparing to Upgrade to a T640 Standard SIB Version B on page 452
2. Replacing T640 Standard SIBs with Standard SIB Version B on page 453

Preparing to Upgrade to a T640 Standard SIB Version B

To prepare to upgrade from standard SIBs to standard SIB version B:

1. Verify that you are running Junos OS Release 7.3 or later.

2. Include the **fabric upgrade-mode** statement in the configuration at the **[edit chassis]** hierarchy level.

   `user@host#` **set chassis fabric upgrade-mode**

3. Commit the configuration on both the master and the backup Routing Engines.

   `user@host#` **commit synchronize**

4. Display the status of the T640 router SIBs by issuing the **show chassis sibs** command:

   `user@host>` **show chassis sibs**

```
Slot  State               Uptime
 0    Spare            255 days, 31 minutes, 12 seconds
 1    Online           255 days, 31 minutes, 12 seconds
 2    Online           255 days, 31 minutes, 12 seconds
 3    Online           255 days, 31 minutes, 12 seconds
 4    Online           255 days, 31 minutes, 12 seconds
```


Copyright © 2019, Juniper Networks, Inc.

Verify that four SIBs are in the **Online** state. If five SIBs are installed, verify that one SIB is in the **Spare** state. To bring a SIB online, issue the **request chassis sib online** operational mode command.

See Also

- T640 Chassis Description on page 15
- T640 Switch Interface Boards (SIBs) Description on page 119
- Maintaining the T640 SIBs on page 481

Replacing T640 Standard SIBs with Standard SIB Version B

To replace the T640 standard SIBs with Standard SIB Version B, perform the following procedures:

1. Attach an electrostatic discharge (ESD) grounding strap to your bare wrist, and connect the strap to one of the ESD points on the chassis.

2. Select one of the SIBs to replace, and take it offline by using one of the following methods:

   - Press and hold the **ONLINE/OFFLINE** button on the SIB faceplate for about five seconds until the **OK** LED is not lit.
   - Issue the **request chassis sib offline** command. For example:

     ```
     user@host> request chassis sib offline slot 0
     ```

     NOTE: When you bring an active SIB offline, the spare SIB becomes active and transitions to the Online state.

3. Replace the SIB with a standard SIB version B. Use the replacement procedures described in "Removing a T640 Standard SIB or Standard SIB Version B" on page 443 and "Installing a T640 Standard SIB or Standard SIB Version B" on page 444

   NOTE: Ensure that the ejector handle tabs are properly mated inside their corresponding chassis slots before you tighten the captive screws on the ejector handles. You might have to close and open the handles a few times before the tabs catch the slots.

See Also

- T640 Chassis Description on page 15
- T640 Switch Interface Boards (SIBs) Description on page 119
- Maintaining the T640 SIBs on page 481
- T640 Preventing Electrostatic Discharge Damage on page 528

Copyright © 2019, Juniper Networks, Inc.

Related Documentation

- T640 Chassis Description on page 15
- T640 Switch Interface Boards (SIBs) Description on page 119
- Maintaining the T640 SIBs on page 481

Replacing a T640 XENPAK Module

XENPAK modules are optical transceivers that can be removed from a PIC.

XENPAK modules are hot-insertable and hot-removable. Removing a XENPAK module does not interrupt PIC functioning, but the removed module no longer receives or transmits data.

1. Removing a T640 XENPAK Module on page 454
2. Installing a T640 XENPAK Module on page 455

Removing a T640 XENPAK Module

To remove a XENPAK module (see Figure 230 on page 455):

1. Place an electrostatic bag or antistatic mat on a flat, stable surface to receive the XENPAK module. Have ready a rubber safety cap for the XENPAK transceiver and the cable.

2. Attach an electrostatic discharge (ESD) grounding strap to your bare wrist, and connect the strap to one of the ESD points on the chassis.

3. Label the cable connected to the XENPAK module so that you can later reconnect it to the correct module.

4. Disconnect the cable from the XENPAK module. Immediately cover the transceiver and the end of the cable with a rubber safety cap.

   WARNING: **Do not look directly into a fiber-optic transceiver or into the ends of fiber-optic cables. Fiber-optic transceivers and fiber-optic cable connected to a transceiver emit laser light that can damage your eyes.**

   CAUTION: **Do not leave a fiber-optic transceiver uncovered except when inserting or removing cable. The safety cap keeps the port clean and prevents accidental exposure to laser light.**

5. Arrange the cable in the cable management system to prevent it from dislodging or developing stress points. Secure the cable so that it is not supporting its own weight as it hangs to the floor. Place excess cable out of the way in a neatly coiled loop in

Copyright © 2019, Juniper Networks, Inc.

the cable management system. Placing fasteners on the loop helps to maintain its shape.

CAUTION: **Avoid bending fiber-optic cable beyond its minimum bend radius. An arc smaller than a few inches in diameter can damage the cable and cause problems that are difficult to diagnose.**

6. Unscrew the thumbscrews at the top and bottom of the XENPAK module.

7. Slide the module out of the PIC and place it in the electrostatic bag or on the antistatic mat.

Figure 230: Removing a XENPAK Module

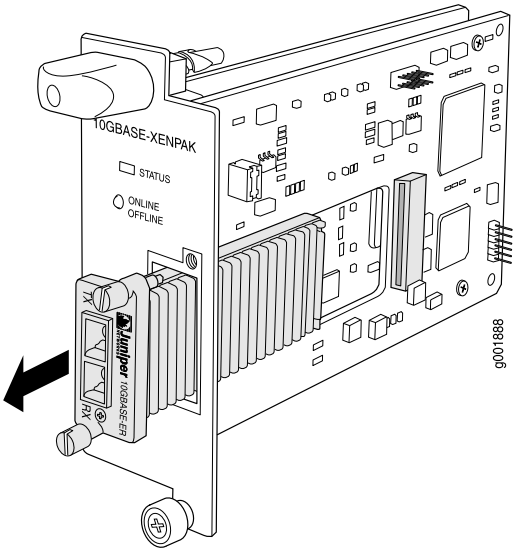

See Also

- T640 Preventing Electrostatic Discharge Damage on page 528
- T640 PIC Description on page 85
- T640 Packet Forwarding Engine Architecture on page 7

Installing a T640 XENPAK Module

To install a replacement XENPAK module (see Figure 231 on page 457):

1. Attach an electrostatic discharge (ESD) grounding strap to your bare wrist, and connect the strap to one of the ESD points on the chassis.

2. Verify that a rubber safety cap covers the XENPAK transceiver. Install one if necessary.

3. Orient the XENPAK module so that the optical port faces out, and the transmit (TX) port is above the receive (RX) port (see Figure 231 on page 457).

4. Slide the XENPAK module into the slot.

5. Tighten the thumbscrews at the top and bottom of the XENPAK module. Verify that the module is seated properly.

6. Remove the rubber safety cap from the transceiver and the end of the cable. Insert the cable into the transceiver.

   WARNING: **Do not look directly into a fiber-optic transceiver or into the ends of fiber-optic cables. Fiber-optic transceivers and fiber-optic cable connected to a transceiver emit laser light that can damage your eyes.**

   CAUTION: **Do not leave a fiber-optic transceiver uncovered except when inserting or removing cable. The safety cap keeps the port clean and prevents accidental exposure to laser light.**

7. Arrange the cable in the cable management system to prevent the cable from dislodging or developing stress points. Secure the cable so that it is not supporting its own weight as it hangs to the floor. Place excess cable out of the way in a neatly coiled loop in the cable management system. Placing fasteners on the loop helps to maintain its shape.

   CAUTION: **Do not let fiber-optic cable hang free from the connector. Do not allow fastened loops of cable to dangle, which stresses the cable at the fastening point.**

   CAUTION: **Avoid bending fiber-optic cable beyond its minimum bend radius. An arc smaller than a few inches in diameter can damage the cable and cause problems that are difficult to diagnose.**

8. Verify that the status LEDs on the PIC faceplate indicate that the XENPAK module is functioning correctly. For more information about the PIC LEDs, see the interface module reference for your device. You can also verify PIC functioning by issuing the **show chassis fpc pic-status** command.

Copyright © 2019, Juniper Networks, Inc.

Figure 231: Installing a XENPAK Module

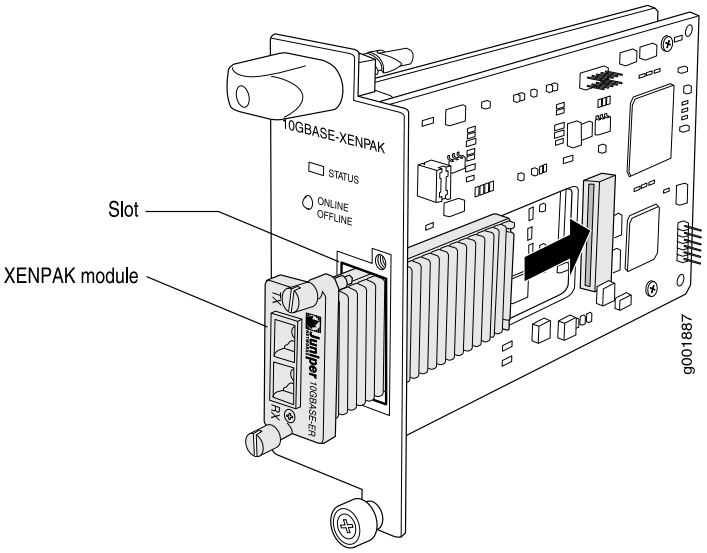

NOTE: Orient the XENPAK module in the slot so it does not touch the faceplate opening.

See Also

- T640 Preventing Electrostatic Discharge Damage on page 528
- T640 PIC Description on page 85
- T640 Packet Forwarding Engine Architecture on page 7
- Maintaining T640 PICs and PIC Cables on page 476

Related Documentation

- T640 Preventing Electrostatic Discharge Damage on page 528
- T640 PIC Description on page 85
- T640 Packet Forwarding Engine Architecture on page 7
- Maintaining T640 PICs and PIC Cables on page 476

Copyright © 2019, Juniper Networks, Inc.

PART 5

Maintaining the Chassis and Components

- Routine Maintenance Procedures on page 461
- Maintaining Components on page 463

Copyright © 2019, Juniper Networks, Inc.

CHAPTER 31

Routine Maintenance Procedures

- Routine Maintenance Procedures for the T640 Router on page 461

Routine Maintenance Procedures for the T640 Router

Purpose For optimum router performance, perform preventive maintenance procedures.

NOTE: Some components, such as the Connector Interface Panel (CIP) and the craft interface, require no maintenance.

Action On a regular basis:

- Inspect the installation site for moisture, loose wires or cables, and excessive dust. Make sure that airflow is unobstructed around the router and into the air intake vents.
- Check the status-reporting devices on the craft interface: system alarms, LEDs, and LCD.
- Inspect the air filters at the bottom front and left rear of the router, replacing them every 6 months. Do not run the router for more than a few minutes without the air filters in place.

Related Documentation

- T640 Chassis Description on page 15
- T640 Craft Interface Description on page 22
- Maintaining the T640 Air Filters on page 464

Copyright © 2019, Juniper Networks, Inc.

CHAPTER 32

Maintaining Components

- Tools and Parts Required to Maintain the T640 Hardware Components on page 463
- Maintaining the T640 SCGs on page 463
- Maintaining the T640 Air Filters on page 464
- Maintaining the T640 Fan Trays on page 465
- Maintaining the T640 Host Subsystem on page 467
- Maintaining the T640 Routing Engines on page 468
- Maintaining the T640 Control Boards on page 469
- Maintaining T640 FPCs on page 470
- Holding and Storing T640 FPCs on page 471
- Maintaining T640 PICs and PIC Cables on page 476
- Maintaining the T640 Power Supplies on page 477
- Maintaining the T640 SIBs on page 481

Tools and Parts Required to Maintain the T640 Hardware Components

To maintain the T320 hardware components, you need the following tools and parts:

- ESD grounding wrist strap
- Flat-blade (–) screwdriver
- Phillips (+) screwdriver, number 1
- Phillips (+) screwdriver, number 2

Related Documentation

- T640 Chassis Description on page 15
- T640 Physical Specifications on page 127

Maintaining the T640 SCGs

Purpose For optimum router performance, verify the condition of the SCGs.

Action On a regular basis:

- Check the SCG LEDs. During normal operations:
  - The green **OK** LED on the SCG faceplate is lit.
  - The yellow **FAIL** LED on the SCG faceplate is not lit.
  - The blue **MASTER** LED on the SCG faceplate indicates which SCG is the master.

  For more information, see "T640 SONET Clock Generators (SCGs) Description" on page 27.

- Issue the **show chassis environment scg** command to display information about the SCGs. The output is similar to the following:

  user@host> **show chassis environment scg**

```
SCG 0 status:
  State                            Online -  Master clock
  Temperature                   31 degrees C / 87 degrees F
  Power:
    GROUND                       0 mV
    3.3 V                     3310 mV
    5.0 V                     5052 mV
    5.6 V                     5689 mV
    1.8 V bias                1782 mV
    3.3 V bias                3306 mV
    5.0 V bias                4989 mV
    8.0 V bias                8336 mV
  GBUS Revision                 40
  FPGA Revision                  1.6
```

  For further description of the output from the commands, see *show chassis environment scg*.

Related Documentation

- T640 Chassis Description on page 15
- T640 Host Subsystem Description on page 35
- Replacing a T640 SCG on page 285

Maintaining the T640 Air Filters

Purpose For optimum cooling, verify the condition of the filters.

Action On a regular basis:

Check the air filters regularly for dust and debris. The filter elements degrade over time, so the filter elements in use, as well as spares, should be replaced every 6 months. For procedures to replace the air filters, see "Replacing a T640 Air Filter" on page 289.

The shelf life of polyurethane filter varies from two years to five years depending on the storage conditions. Store in a cool, dry, and dark environment. Wrap the media in plastic

 Copyright © 2019, Juniper Networks, Inc.

and store in an environment with relative humidity between 40%- 80% and temperature between 40ºF (4º C) to 90ºF (32º C). Note that if the material flakes, or becomes brittle when rubbed or deformed, it is no longer usable.

CAUTION: **Always keep both air filters in place while the router is operating. Because the fans are very powerful, they could pull small bits of wire or other materials into the router through the unfiltered air intake. This could damage the router components.**

Related Documentation

- T640 Cooling System Description on page 31
- T640 Clearance Requirements for Airflow and Hardware Maintenance on page 130
- Replacing a T640 Air Filter on page 289

Maintaining the T640 Fan Trays

Purpose For optimum cooling, verify the condition of the fans.

Action On a regular basis:

- Monitor the status of the fans. The fan trays each contain multiple fans that work in unison to cool the router components. If one fan fails, the host subsystem adjusts the speed of the remaining fans to maintain proper cooling. A red alarm is triggered when a fan fails, and a yellow alarm is triggered when a fan tray is removed.
- To display the status of the fans, issue the **show chassis environment** command or **show chassis fan** command.

  During normal operation, the fans in each fan tray function at less than full speed.

  For the standard front fan trays and standard rear fan tray with eight fans, the output for the **show chassis environment** command is similar to the following:

  user@host> **show chassis environment**

```
Class Item                    Status  Measurement
...
Fans  Top Left Front fan             OK         Spinning at normal speed
      Top Left Middle fan            OK         Spinning at normal speed
      Top Left Rear fan              OK         Spinning at normal speed
      Top Right Front fan            OK         Spinning at normal speed
      Top Right Middle fan           OK         Spinning at normal speed
      Top Right Rear fan             OK         Spinning at normal speed
      Bottom Left Front fan          OK         Spinning at normal speed
      Bottom Left Middle fan         OK         Spinning at normal speed
      Bottom Left Rear fan           OK         Spinning at normal speed
      Bottom Right Front fan         OK         Spinning at normal speed
      Bottom Right Middle fan        OK         Spinning at normal speed
      Bottom Right Rear fan          OK         Spinning at normal speed
      Rear Tray Top fan              OK         Spinning at normal speed
```

```
     Rear Tray Second fan          OK         Spinning at normal speed
     Rear Tray Third fan           OK         Spinning at normal speed
     Rear Tray Fourth fan          OK         Spinning at normal speed
     Rear Tray Fifth fan           OK         Spinning at normal speed
     Rear Tray Sixth fan           OK         Spinning at normal speed
     Rear Tray Seventh fan         OK         Spinning at normal speed
     Rear Tray Bottom fan          OK         Spinning at normal speed...
```

Top Left and **Top Right** refer to fans in the upper front fan tray. **Bottom Left** and **Bottom Right** refer to fans in the lower front fan tray. **Rear** refers to the fans in the rear fan tray.

For the quiet fan trays, the output for the **show chassis environment** command is similar to the following:

```
user@host> show chassis environment
Class Item                    Status  Measurement
Fans  Top Left Front fan            OK         Spinning at normal speed
      Top Left Rear fan             OK         Spinning at normal speed
      Top Right Front fan           OK         Spinning at normal speed
      Top Right Rear fan            OK         Spinning at normal speed
      Bottom Left Front fan         OK         Spinning at normal speed
      Bottom Left Rear fan          OK         Spinning at normal speed
      Bottom Right Front fan        OK         Spinning at normal speed
      Bottom Right Rear fan         OK         Spinning at normal speed
      Rear Tray Top fan             OK         Spinning at normal speed
      Rear Tray Second fan          OK         Spinning at normal speed
      Rear Tray Third fan           OK         Spinning at normal speed
      Rear Tray Fourth fan          OK         Spinning at normal speed
      Rear Tray Fifth fan           OK         Spinning at normal speed
      Rear Tray Sixth fan           OK         Spinning at normal speed
      Rear Tray Seventh fan         OK         Spinning at normal speed
      Rear Tray Bottom fan          OK         Spinning at normal speed
```

Top Left and **Top Right** refer to the four fans in the upper front fan tray. **Bottom Left** and **Bottom Right** refer to the four fans in the lower front fan tray. **Rear** refers to the eight fans in the rear fan tray.

For the standard front fan trays and standard rear fan tray with eight fans, the output for the **show chassis fan** command is similar to the following:

```
user@host> show chassis fan

     Item                      Status   RPM     Measurement
     Top Left Front fan        OK       3420    Spinning at normal speed
     Top Left Middle fan       OK       3420    Spinning at normal speed
     Top Left Rear fan         OK       3450    Spinning at normal speed
     Top Right Front fan       OK       3420    Spinning at normal speed
     Top Right Middle fan      OK       3420    Spinning at normal speed
     Top Right Rear fan        OK       3420    Spinning at normal speed
     Bottom Left Front fan     OK       3420    Spinning at normal speed
     Bottom Left Middle fan    OK       3450    Spinning at normal speed
     Bottom Left Rear fan      OK       3360    Spinning at normal speed
     Bottom Right Front fan    OK       3420    Spinning at normal speed
     Bottom Right Middle fan   OK       3420    Spinning at normal speed
     Bottom Right Rear fan     OK       3420    Spinning at normal speed
     Rear Tray Top fan         OK       5190    Spinning at normal speed
```


Copyright © 2019, Juniper Networks, Inc.

```
Rear Tray Second fan      OK       5190    Spinning at normal speed
Rear Tray Third fan       OK       5190    Spinning at normal speed
Rear Tray Fourth fan      OK       5190    Spinning at normal speed
Rear Tray Fifth fan       OK       5190    Spinning at normal speed
Rear Tray Sixth fan       OK       5190    Spinning at normal speed
Rear Tray Seventh fan     OK       5190    Spinning at normal speed
Rear Tray Bottom fan      OK       5190    Spinning at normal speed
```

For the quiet fan trays, the output for the **show chassis fan** command is similar to the following:

```
user@host> show chassis fan

Item                      Status   RPM     Measurement
Top Left Front fan        OK       2220    Spinning at normal speed
Top Left Rear fan         OK       2190    Spinning at normal speed
Top Right Front fan       OK       2220    Spinning at normal speed
Top Right Rear fan        OK       2250    Spinning at normal speed
Bottom Left Front fan     OK       2220    Spinning at normal speed
Bottom Left Rear fan      OK       2220    Spinning at normal speed
Bottom Right Front fan    OK       2250    Spinning at normal speed
Bottom Right Rear fan     OK       2220    Spinning at normal speed
Rear Tray Top fan         OK       5190    Spinning at normal speed
Rear Tray Second fan      OK       5190    Spinning at normal speed
Rear Tray Third fan       OK       5190    Spinning at normal speed
Rear Tray Fourth fan      OK       5190    Spinning at normal speed
Rear Tray Fifth fan       OK       5190    Spinning at normal speed
Rear Tray Sixth fan       OK       5190    Spinning at normal speed
Rear Tray Seventh fan     OK       5190    Spinning at normal speed
Rear Tray Bottom fan      OK       5190    Spinning at normal speed
```

Related Documentation

- T640 Cooling System Description on page 31
- Troubleshooting the T640 Cooling System on page 491

Maintaining the T640 Host Subsystem

Purpose For optimum router performance, verify the condition of the host subsystem. The host subsystem comprises a Routing Engine and up to two adjacent control boards functioning together.

Action On a regular basis:

- Check the host subsystem LEDs (**HOST0** and **HOST1**) on the craft interface. If the red **HOST0 FAIL** or **HOST1 FAIL** LED is lit, look at the LCD to get more information about the cause of the problem. For more information about the LEDs and the display, see "T640 Craft Interface Description" on page 22.

  During normal operations:

  - The green host subsystem **OK** LED on the craft interface is lit.

- The red host subsystem **FAIL** LED on the craft interface is not lit.

- Check the LCD on the craft interface to view information about the status of the Routing Engines and control boards.

Related Documentation

- T640 Host Subsystem Description on page 35
- Taking the T640 Host Subsystem Offline on page 319
- Maintaining the T640 Routing Engines on page 468
- Maintaining the T640 Control Boards on page 469
- Replacing the T640 Host Subsystem Components on page 319

Maintaining the T640 Routing Engines

Purpose For optimum router performance, verify the condition of the Routing Engines.

Action On a regular basis:

- Check the host subsystem LEDs on the craft interface. For more information about the LEDs and the display, see "T640 Craft Interface Description" on page 22.
- Check the LCD on the craft interface to view information about the router temperature and the status of the Routing Engines.
- Issue the **show chassis routing-engine** command to check the status of the Routing Engines. The output is similar to the following:

```
user@host> show chassis routing-engine
Routing Engine status:
  Slot 0:
  Current state             Master
  Election priority         Master (default)
  Temperature            34 degrees C / 93 degrees F
    DRAM               2048 Mbytes
    CPU utilization:
    User                  0 percent
    Background            0 percent
    Kernel                1 percent
    Interrupt             0 percent
    Idle                 99 percent
    Start time              2002-01-22 05:21:31 UTC
    Uptime                  10 days, 16 hours, 4 minutes, 52 seconds
    Load averages:          1 minute   5 minute  15 minute
                                0.00       0.00       0.00
Routing Engine status:
  Slot 1:
  Current state             Empty
```

For further description of the output from the commands, see *show chassis routing-engine*.

 Copyright © 2019, Juniper Networks, Inc.

Related Documentation

- T640 Routing Engine Description on page 36
- T640 RE-600 LEDs on page 39
- T640 RE-1600 LEDs on page 41
- T640 RE-2000 LEDs on page 45
- T640 RE-C1800 LEDs on page 43
- Troubleshooting the T640 Host Subsystem on page 494

Maintaining the T640 Control Boards

Purpose For optimum router performance, verify the condition of the router's control boards.

Action On a regular basis:

- Check the LEDs on the control board faceplate. During normal operations:
  - The green **OK** LED on the control board faceplate is lit.
  - The green host subsystem **OK** LED on the craft interface is lit.
  - The red host subsystem **FAIL** LED on the craft interface is not lit.
  - The yellow **FAIL** LED on the control board faceplate is not lit.
- Issue the **show chassis environment cb** command to check the status of the control boards. The output is similar to the following:

```
user@host> show chassis environment cb
CB 0 status:
  State                          Online Master
  Temperature                 29 degrees C / 84 degrees F
  Power:
    1.8 V                   1809 mV
    2.5 V                   2496 mV
    3.3 V                   3295 mV
    4.6 V                   4687 mV
    5.0 V                   5042 mV
    12.0 V                 11985 mV
    3.3 V bias              3277 mV
    8.0 V bias              7472 mV
  GBUS Revision               40
  FPGA Revision                7
```

For further description of the output from the commands, see*show chassis environment cb*.

Related Documentation

- *T640 Control Boards Description*
- T640 Standard Control Boards LEDs on page 70

- T640 T Series Control Boards (T-CBs) LEDs on page 72
- T640 LCC-CB LEDs on page 68
- Troubleshooting the T640 Host Subsystem on page 494
- Troubleshooting the T640 Control Board on page 495

Maintaining T640 FPCs

Purpose For optimum router performance, verify the condition of the FPCs. The router can have up to eight FPCs mounted vertically in the FPC card cage at the front of the chassis.

Action On a regular basis:

- Check the LCD on the craft interface and the LEDs on the craft interface directly above each FPC slot. During normal operation:
  - The **OK** LED lights steadily.

    During normal operation, the green **OK** LED above the FPC on the craft interface lights steadily when the FPC is online and functioning normally. The green **OK** LED blinks during startup.
- Issue the CLI **show chassis fpc** command to check the status of installed FPCs. As shown in the sample output, the value **Online** in the column labeled **State** indicates that the FPC is functioning normally:

```
user@host> show chassis fpc
```

```
                     Temp  CPU Utilization (%)   Memory    Utilization (%)
Slot State            (C)  Total  Interrupt      DRAM (MB) Heap     Buffer
  0  Online            23      2          0       256        12         49
  1  Online            26      5          0       256        21         49
  2  Online            31      5          0       1024        6         49
  3  Online            31      8          0       1024        6         49
  4  Online            26     26          0       1024        4         49
  5  Online            25      2          0       256        12         49
  6  Online            23      1          0       256        12         49
  7  Empty
```

For more detailed output, add the **detail** option. The following example also specifies a slot number (**0**), which is optional:

```
user@host> show chassis fpc detail 0
```

```
Slot 0 information:
  State                                 Online
  Temperature                        23 degrees C / 73 degrees F
  Total CPU DRAM                    256 MB
  Total SRAM                         36 MB
  Total SDRAM                       640 MB
  Start time                            2008-12-12 11:02:43 PST
  Uptime                                5 hours, 18 minutes, 51 seconds
```

 Copyright © 2019, Juniper Networks, Inc.

For further description of the output from the commands, see *show chassis environment fpc*.

Related Documentation

- T640 Chassis Description on page 15
- T640 FPC Description on page 73
- T640 Craft Interface FPC LEDs and Online/Offline Buttons on page 24

Holding and Storing T640 FPCs

- Holding T640 FPCs on page 471
- Storing T640 FPCs on page 475

Holding T640 FPCs

CAUTION: **Many components on the FPC are fragile. Failure to handle FPCs as specified in this document can cause irreparable damage.**

NOTE: **An FPC configured with PICs installed can weigh as much as 29 lb (13.2 kg). Be prepared to accept the full weight of the FPC as you lift it.**

To prevent damage when handling or carrying FPCs:

- As you carry the FPC, do not bump it against anything. FPC components are fragile.
- Do not grasp the FPC anywhere except places that this document indicates. In particular, never grasp the connector edge, especially at the power connector in the corner where the connector and bottom edges meet (see Figure 232 on page 472).

Figure 232: Do Not Grasp the Connector Edge

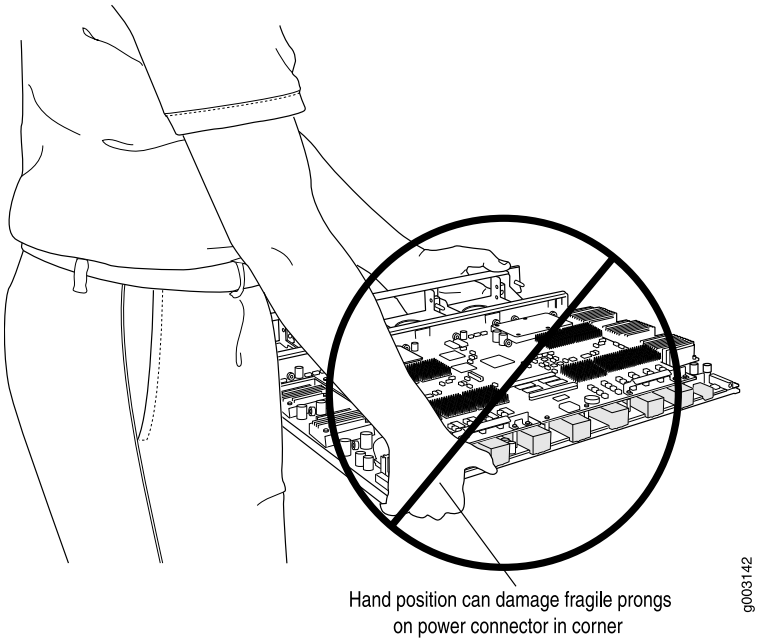

- Do not carry the FPC by the faceplate with only one hand (see Figure 233 on page 473).

Copyright © 2019, Juniper Networks, Inc.

Figure 233: Do Not Carry an FPC with Only One Hand

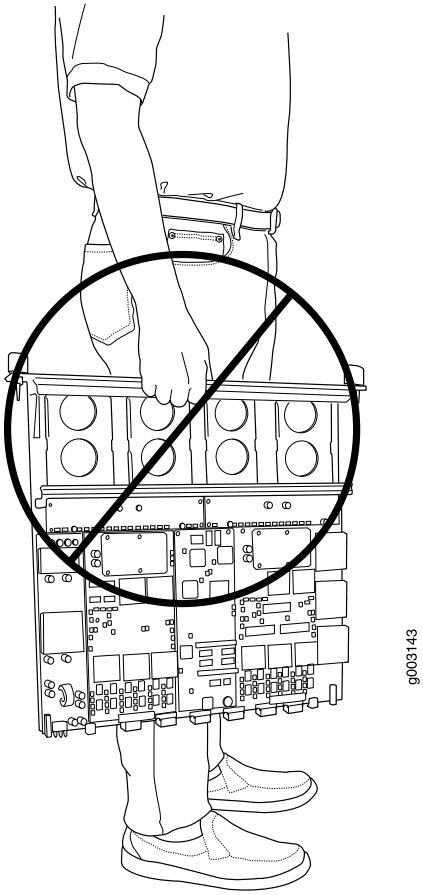

- Do not rest any edge of an FPC directly against a hard surface (see Figure 234 on page 473). If you must rest the FPC temporarily on an edge while changing its orientation between vertical and horizontal, use your hand as a cushion between the edge and the surface.

Figure 234: Do Not Rest the FPC on an Edge

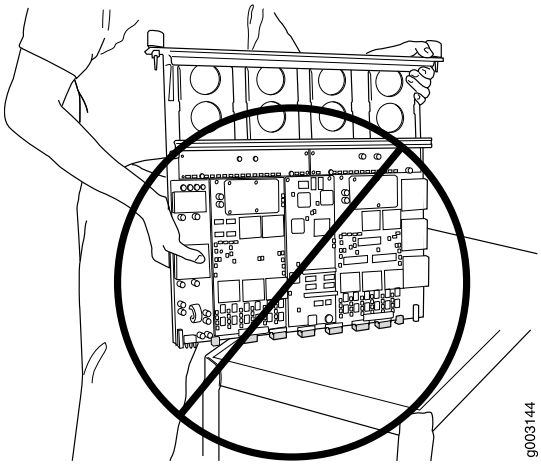

You hold an FPC vertically when installing it into the chassis or an equipment rack. To hold an FPC vertically (see Figure 235 on page 474):

1. Orient the FPC so that the faceplate faces you.

2. Place one hand around the FPC faceplate about a quarter of the way down from the top edge. To avoid deforming the electromagnetic interference (EMI) shielding strip, do not press hard on it.

3. Place your other hand at the bottom edge of the FPC. If the FPC has heat sinks about midway between the faceplate and connector edge, place your other hand against the heat sinks.

Figure 235: Holding an FPC Vertically

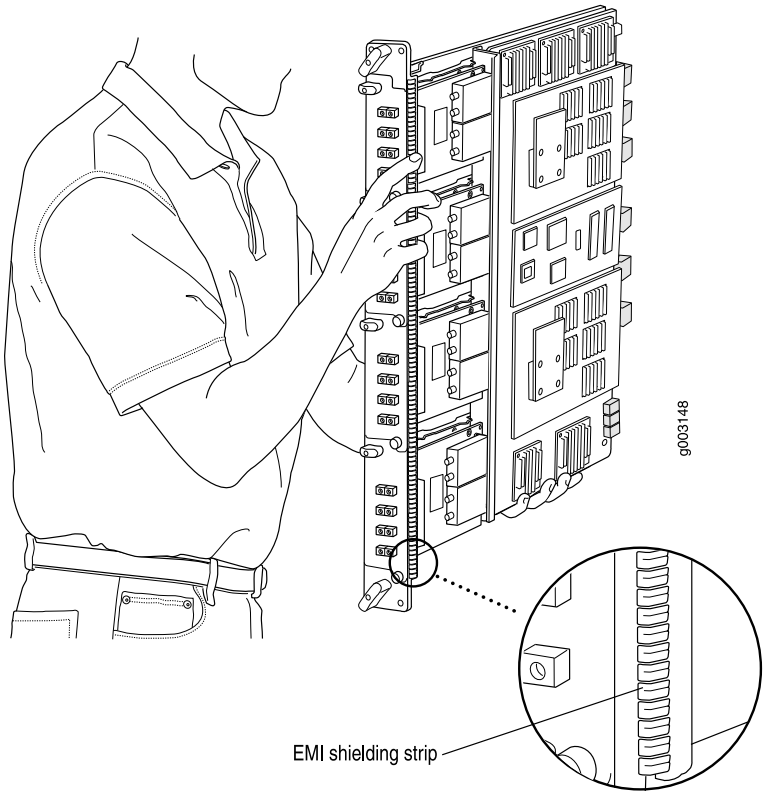

See Also

- T640 FPC Description on page 73
- Troubleshooting the T640 FPCs on page 496

Copyright © 2019, Juniper Networks, Inc.

Storing T640 FPCs

When an FPC is not installed in a router, the FPC must be either stored in the container in which a spare FPC is shipped or stored horizontally with the component-side up on a flat, stable surface. When you store an FPC on a horizontal surface or in the shipping container, always place it inside an antistatic bag. Because the FPC is heavy and because antistatic bags are fragile, inserting the FPC into the bag is easier with two people. The storage procedures are as follows:

- When storing an FPC with two people, one person holds the FPC in the horizontal position with the faceplate facing their body, the other person slides the opening of the bag over the FPC connector edge.
- When storing an FPC with one person, you must insert the FPC into a bag by yourself. First lay the FPC horizontally on a flat, stable surface, component-side up. Orient the FPC with the faceplate facing you. Carefully insert the FPC connector edge into the opening of the bag, and pull the bag toward you to cover the FPC.

CAUTION: To prevent damage when storing FPCs:

- Never lay an FPC component-side down.

Figure 236: Do Not Stack FPCs

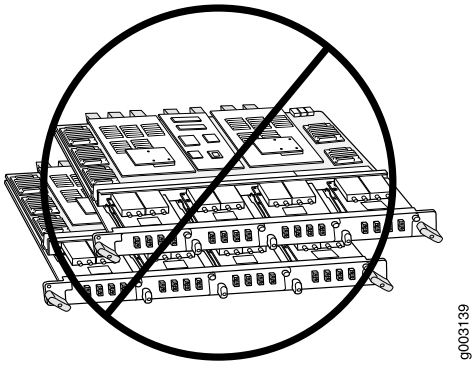

- Never stack an FPC under or on top of any other component (see Figure 236 on page 475).

See Also

- T640 FPC Description on page 73
- Troubleshooting the T640 FPCs on page 496

Related Documentation

- T640 FPC Description on page 73
- Troubleshooting the T640 FPCs on page 496

Copyright © 2019, Juniper Networks, Inc.

Maintaining T640 PICs and PIC Cables

Purpose For optimum router performance, verify the condition of the PICs and PIC cables.

Action On a regular basis:

- Check the LEDs on PIC faceplates. A PIC LED lit green indicates the PIC is functioning normally. The meaning of the LED states differs for various PICs. For more information, see the interface module reference for your device. If the FPC that houses the PIC detects a PIC failure, the FPC generates an alarm message to be sent to the Routing Engine.
- Issue the CLI **show chassis fpc pic-status** command. The PIC slots in an FPC are numbered from **0** through **3**, top to bottom:

  user@host> **show chassis fpc pic-status**

  ```
  Slot 0   Online       E-FPC Type 3
    PIC 0  Online       1x 10GE(LAN),DWDM
    PIC 2  Present      1x OC-192 SONET XFP- Hardware Error
    PIC 3  Online       1x 10GE(LAN),XENPAK
  Slot 2   Online       E2-FPC Type 2
    PIC 0  Online       1x OC-48 SONET, SMIR
    PIC 1  Online       2x OC-12 ATM-II IQ, MM
    PIC 2  Online       8x 1GE(LAN), IQ2
  Slot 3   Online       FPC Type 3
    PIC 0  Online       1x 10GE(LAN),XENPAK
    PIC 1  Online       1x 10GE(LAN),XENPAK
    PIC 2  Online       8x 1GE(TYPE3), IQ2
    PIC 3  Online       8x 1GE(TYPE3), IQ2
  Slot 4   Online       FPC Type 4
    PIC 0  Online       4x OC-192 SONET XFP
  Slot 6   Online       FPC Type 3
    PIC 0  Online       4x OC-48 SONET
    PIC 1  Online       1x Tunnel
  Slot 7   Online       FPC Type 4
    PIC 0  Online       1x OC-768 SONET SR
  ```

  For further description of the output from the command, see *show chassis fpc*.
- Use the cable management system to support cables and prevent cables from dislodging or developing stress points.
- Place excess cable out of the way in the cable management system. Do not allow fastened loops of cable to dangle from the connector or cable management system, because this stresses the cable at the fastening point. Putting fasteners on the loops helps to maintain their shape.
- Keep the cable connections clean and free of dust and other particles, which can cause drops in the received power level. Always inspect cables and clean them if necessary before connecting an interface.
- Label both ends of PIC cables to identify them.

The following guidelines apply specifically to fiber-optic cable:

 Copyright © 2019, Juniper Networks, Inc.

- When you unplug a fiber-optic cable from a PIC, always place a rubber safety plug over the transceiver on the PIC faceplate and on the end of the cable.
- Anchor fiber-optic cable to avoid stress on the connectors. When attaching fiber to a PIC, be sure to secure the fiber so it is not supporting its own weight as it hangs to the floor. Never let fiber-optic cable hang free from the connector.
- Avoid bending fiber-optic cable beyond its bend radius. An arc smaller than a few inches can damage the cable and cause problems that are difficult to diagnose.
- Frequent plugging and unplugging of fiber-optic cable into and out of optical instruments, such as ATM or SONET/SDH analyzers, can cause damage to the instruments that is expensive to repair. Instead, attach a short fiber extension to the optical equipment. Any wear and tear due to frequent plugging and unplugging is then absorbed by the short fiber extension, which is easy and inexpensive to replace.
- Keep fiber-optic cable connections clean. Small microdeposits of oil and dust in the canal of the transceiver or cable connector could cause loss of light, reducing signal power and possibly causing intermittent problems with the optical connection.

  To clean the transceivers, use an appropriate fiber-cleaning device, such as RIFOCS Fiber Optic Adaptor Cleaning Wands (part number 946). Follow the directions for the cleaning kit you use.

  After you have cleaned the transceiver on the fiber-optic PIC, make sure that the connector tip of the fiber-optic cable is clean. Use only an approved alcohol-free fiber-optic cable cleaning kit, such as the Opptex Cletop-S® Fiber Cleaner. Follow the directions for the cleaning kit you use.

Related Documentation

- T640 Chassis Description on page 15
- T640 PIC Description on page 85
- Connecting PIC Cables to the T640 Router on page 225
- Replacing T640 PIC Cables on page 358

Maintaining the T640 Power Supplies

Purpose For optimum router performance, verify the condition of the power supplies.

Action On a regular basis:

- Make sure that the power and grounding cables are arranged so that they do not obstruct access to other router components.
- The power supplies require an unobstructed airflow at both the front and rear of the chassis. Periodically check the site to ensure that both the air intake at the bottom front of the chassis and the exhaust from the power supply faceplates are unobstructed.
- Periodically inspect the site to ensure that the grounding and power cables connected to the router are securely in place and that no moisture is accumulating near the router. To review grounding and site wiring requirements for the router, see "T640 Chassis

Grounding Cable and Lug Specifications" on page 126 and "Site Electrical Wiring Guidelines for Juniper Networks Devices" on page 560.

- Regularly inspect the air filters on each power supply for dust and debris, and replace the side filter on AC power supplies or front filter element on AC and DC power supplies every 6 months. To replace a power supply front air filter element, see "Replacing a Front Air Filter Element on a T640 AC or DC Power Supply" on page 406. To replace a side air filter, see "Replacing a Side Air Filter on a T640 AC Power Supply" on page 408.
- Routinely check the LEDs on the DC power supply faceplates.

  For a two-input 160-A DC power supply:

  - The blue **DC OK** LEDs light to indicate that the power supplies are functioning normally.
  - The **CB ON** LED is lit, indicating that the circuit breaker is on.
  - For a three-input 240-A DC power supply or four-input 240-A DC power supply:
    - The blue **DC OK** LED is on, the power source is good and the power supplies are functional.
    - Each **INPUT PRESENT** LED is lit, indicating that the input is receiving source DC power.
    - The **CB ON** LED is lit, indicating that the circuit breaker is on.
  - For a six-input DC power supply:
    - The blue **DC OK** LED is on, the power source is good and the power supplies are functional.
    - Each **INPUT PRESENT** LED is lit, indicating that the input is receiving source DC power.
- Routinely check the LEDs on the AC power supply faceplates. For a three-phase delta or wye AC power supply:
  - The green **AC OK** LED lights to indicate that the power supply is receiving source AC power.
  - The blue **DC OK** LED lights to indicate that the power supply is functioning normally.
- Check the red and yellow alarm LEDs and the LCD on the craft interface. Power supply failure or removal triggers an alarm that causes one or both of the LEDs to light and an error message to appear on the LCD. You can display the associated error messages by issuing the CLI command:

  ```
  user@host> show chassis alarms
  ```

  For a list of possible alarm messages, see "Troubleshooting the T640 Power System" on page 498.
- Issue the **show chassis environment pem** command to check the status of the power supplies.

Copyright © 2019, Juniper Networks, Inc.

For further description of the output from the commands, see *show chassis environment pem*.

- `user@host>` **show chassis environment pem**

  For DC-powered routers with two-input 160-A DC power supplies, three-input 240-A DC power supplies or four-input 240-A DC power supplies, the output is similar to the following:

```
PEM 0 status:
  State                      Online
  Temperature                24 degrees C / 75 degrees F
  DC Input:                  OK
  DC Output             Voltage   Current       Power    Load
      FPC 0               0         0             0        0
      FPC 1               54558     981           53       7
      FPC 2               54558     2800          152      20
      FPC 3               54700     2225          121      16
      FPC 4               54375     2387          129      17
      FPC 5               54308     3543          192      25
      FPC 6               54558     1287          70       9
      FPC 7               54616     2650          144      19
      SCG/CB/SIB          54150     181           9        0
```

```
PEM 1 status:
  State                      Online
  Temperature                23 degrees C / 73 degrees F
  DC Input:                  OK
  DC Output             Voltage   Current       Power    Load
      FPC 0               0         0             0        0
      FPC 1               50691     0             0        0
      FPC 2               50766     0             0        0
      FPC 3               50725     0             0        0
      FPC 4               50725     0             0        0
      FPC 5               50766     0             0        0
      FPC 6               50808     0             0        0
      FPC 7               50625     0             0        0
      SCG/CB/SIB          50300     0             0        0
```

  For two-input 160-A DC power supplies, three-input 240-A DC power supplies in **2–INPUT** mode, and four-input 240-A DC power supplies, the current sharing between DC power supplies relies on equal voltages at the input terminals of the power supplies. However, if the voltages do not match, the router operates normally as long as the DC input voltages are within the operating range provided in "T640 DC Power System Electrical Specifications" on page 133.

- For DC-powered routers with six-input DC power supplies, the output is similar to the following:

  `user@host>` **show chassis environment pem**

```
PEM 0 status:
  State                      Online
  Temperature                34 degrees C / 93 degrees F
  DC Input:                  OK
                       Voltage(V)  Current(A)  Power(W)  Load(%)
      INPUT 0            53.500       7.437      397       52
```

```
    INPUT 1          53.750      10.812      581       77
    INPUT 2          53.125       9.562      507       67
    INPUT 3          53.625      11.125      596       79
    INPUT 4          53.750       9.875      530       70
    INPUT 5          53.250       9.500      505       67
DC Output          Voltage(V)  Current(A)  Power(W)  Load(%)
    FPC 0             0.000       0.000        0        0
    FPC 1             0.000       0.000        0        0
    FPC 2             0.000       0.000        0        0
    FPC 3             0.000       0.000        0        0
    FPC 4            55.375       9.562      529       70
    FPC 5             0.062       0.000        0        0
    FPC 6            55.062       9.000      495       66
    FPC 7            55.437       9.000      498       66
    SCG/CB/SIB       55.375      15.375      851       70
    FAN              49.000       7.875      385       51
```

- For AC-powered routers, the output is similar to the following:

```
user@host> show chassis environment pem
PEM 1 status:

  State                      Online

  Temperature                33 degrees C / 91 degrees F

  AC Input:                  OK

  DC Output          Voltage(mV) Current(mA)  Power(W)  Load(%)

      FPC 0              55183     7056          389      51

      FPC 1              55633     7018          390      52

      FPC 2              55533     5187          288      38

      FPC 3              55533     7081          393      52

      FPC 4              55508     6612          367      48

      FPC 5              55791     7337          409      54

      FPC 6              55675     2593          144      19

      FPC 7              55608     7600          422      56

      SCG/CB/SIB         55308     5600          309      25
```

Related Documentation

- T640 Two-Input 160-A DC Power Supply LEDs on page 106
- T640 Three-Input 240-A DC Power Supply LEDs on page 108
- T640 Four-Input 240-A DC Power Supply LEDs on page 111
- T640 Six-Input DC Power Supply LEDs on page 113
- T640 Three-Phase Delta and Wye AC Power Supply LEDs on page 117

Copyright © 2019, Juniper Networks, Inc.

- Troubleshooting the T640 Power System on page 498
- T640 General Electrical Safety Guidelines and Electrical Codes on page 551

Maintaining the T640 SIBs

Purpose For optimum router performance, verify the condition of the SIBs.

Action On a regular basis:

- Observe the status of the SIBs by checking the LEDs on the SIB faceplate. During normal operations:
  - The green **OK** LED on the SIB faceplate is lit.
  - The yellow **FAIL** LED on the SIB faceplate is not lit.
- To check the status of the SIBs using the CLI, issue the **show chassis environment sib** command. The output is similar to the following:

```
user@host> show chassis environment sib
SIB 0 status:
  State                            Spare
  Temperature                   45 degrees C / 113 degrees F
  Power:
    GROUND                       0 mV
    1.8 V                     1794 mV
    2.5 V                     2446 mV
    3.3 V                     3291 mV
    1.8 V bias                1780 mV
    3.3 V bias                3284 mV
    5.0 V bias                5003 mV
    8.0 V bias                6910 mV
SIB 1 status:
  State                            Online
  Temperature                   45 degrees C / 113 degrees F
  Power:
    GROUND                       0 mV
    1.8 V                     1802 mV
    2.5 V                     2461 mV
    3.3 V                     3294 mV
    1.8 V bias                1782 mV
    3.3 V bias                3294 mV
    5.0 V bias                5013 mV
    8.0 V bias                7057 mV
SIB 2 status:
  State                            Online
  Temperature                   47 degrees C / 116 degrees F
  Power:
    GROUND                       0 mV
    1.8 V                     1794 mV
    2.5 V                     2461 mV
    3.3 V                     3301 mV
    1.8 V bias                1785 mV
    3.3 V bias                3296 mV
```

```
5.0 V bias                4998 mV
8.0 V bias                7050 mV
```

For more information about using the command, see *show chassis environment sib*.

Related Documentation

- T640 Switch Interface Boards (SIBs) Description on page 119
- T640 Craft Interface SIB LEDs on page 26
- Replacing a T640 SIB on page 443

Copyright © 2019, Juniper Networks, Inc.

PART 6

Troubleshooting Hardware

- Troubleshooting Components on page 485

Copyright © 2019, Juniper Networks, Inc.

CHAPTER 33

Troubleshooting Components

- Overview of Troubleshooting Resources for the T640 Router on page 485
- T640 LED Overview on page 486
- T640 Alarm Messages Overview on page 488
- Troubleshooting the T640 Craft Interface on page 489
- Troubleshooting the T640 SONET Clock Generators on page 490
- Troubleshooting the T640 Cooling System on page 491
- Troubleshooting the T640 Host Subsystem on page 494
- Troubleshooting the T640 Control Board on page 495
- Troubleshooting the T640 FPCs on page 496
- Troubleshooting the T640 PICs on page 497
- Troubleshooting the T640 Power System on page 498
- Troubleshooting the T640 SIBs on page 501

Overview of Troubleshooting Resources for the T640 Router

To troubleshoot a router, you use the Junos OS command-line interface (CLI), LCD, alarms, devices connected to the alarm relay contacts on the CIP, and LEDs on both the components and craft interface.

- LEDs—When the Routing Engine detects an alarm condition, it lights the red or yellow alarm LED on the craft interface as appropriate. In addition, you can also use the component-specific LEDs on the craft interface and on the faceplate of a component to troubleshoot the router.
- LCD—When a red or yellow alarm occurs, the cause of the alarm messages is displayed on the craft interface LCD.
- Alarm devices connected to the alarm relay contact on the CIP—When a red or yellow alarm occurs, it trips the corresponding alarm relay contact on the CIP.
- CLI—The CLI is the primary tool for controlling and troubleshooting hardware, Junos OS, routing protocols, and network connectivity. Use the CLI to display more information about alarms. CLI commands display information from routing tables, information specific to routing protocols, and information about network connectivity derived from

Copyright © 2019, Juniper Networks, Inc.

the ping and traceroute utilities. For information about using the CLI to troubleshoot the Junos OS, see the appropriate Junos OS configuration guide.

- JTAC—If you need assistance during troubleshooting, you can contact the Juniper Networks Technical Assistance Center (JTAC) by using the Web or by telephone. If you encounter software problems, or problems with hardware components not discussed here, contact JTAC.

Related Documentation

- T640 Connector Interface Panel (CIP) Description on page 19
- T640 LED Overview on page 486
- T640 Alarm Messages Overview on page 488
- Contacting Customer Support on page 505

T640 LED Overview

- Craft Interface LEDs on page 486
- Component LEDs on page 487

Craft Interface LEDs

The craft interface is the panel on the front of the router that displays system status messages and allows you to troubleshoot the router. The craft interface is located at the top of the chassis above the FPC card cage. It contains LEDs, buttons, and an LCD showing status messages for the router.

To display system alarm messages on the LCD, see "T640 Alarm Messages Overview" on page 488. For more information about using the craft interface, see "T640 Craft Interface Description" on page 22.

LEDs on the craft interface include:

- Host subsystem LEDs—Three LEDs (one green **MASTER**, one green **OK**, and one red **FAIL**) indicate the status of each host subsystem. The host subsystem LEDs are located on the upper right of the craft interface, and are labeled **HOST0** and **HOST1**.

  See "T640 Craft Interface Host Subsystem LEDs" on page 24.

- SIB LEDs—Two LEDs (one red **FAIL** and one green **OK**) indicate the status of each SIB. The SIB LEDs are located on the upper right of the craft interface, and are labeled **SIB0** through **SIB4**.

  See "T640 Craft Interface SIB LEDs" on page 26.

- FPC LEDs—Two LEDs (one red **FAIL** and one green **OK**) indicate the status of each FPC. The FPC LEDs are located along the bottom edge of the craft interface, and are labeled **FPC0** through **FPC7**.

Copyright © 2019, Juniper Networks, Inc.

See "T640 Craft Interface FPC LEDs and Online/Offline Buttons" on page 24.

- Alarm LEDs—One large red circular LED and one large yellow triangular LED, located on the upper left of the craft interface, indicate two levels of alarm conditions. You can determine the cause of the alarm condition by looking at the LCD on the craft interface.

  See "T640 Craft Interface Alarm LEDs and ACO/LT Button" on page 23.

Component LEDs

The following LEDs are located on various router components and display the status of those components:

- Connector interface panel (CIP) LEDs—Two small LEDs on left edge of the **ETHERNET** port on the CIP indicate the connection in use.

  NOTE: **When RE-C1800 are installed, the LEDs are always yellow for both a 10-Mbps connection and 100-Mbps connection.**

  See "T640 Connector Interface Panel (CIP) LEDs" on page 22.

- Control board LEDs—Three LEDs on each control board faceplate indicate the status of that control board. If no LEDs are lit, the control board is not receiving power.

  See "T640 Standard Control Boards LEDs" on page 70, "T640 T Series Control Boards (T-CBs) LEDs" on page 72, or "T640 LCC-CB LEDs" on page 68.

- PIC LEDs—Each port on each PIC has an LED that indicates the status of the port.

  See the *T640 Core Router Interface Module Reference*.

- SIB LEDs—Three LEDs on each SIB faceplate—**ACTIVE**, **OK**, and **FAIL**—indicate the status of that SIB.

  See *T640 Switch Interface Boards (SIBs) LEDs*

- SCG LEDs—Three LEDs on each SCG faceplate indicate the status of that SCG.

  T640 SONET Clock Generators (SCGs) LEDs on page 28

- Power supply LEDs—LEDs on each power supply faceplate indicates the status of that power supply.

  See the following documentation:

  - T640 Two-Input 160-A DC Power Supply LEDs on page 106
  - T640 Three-Input 240-A DC Power Supply LEDs on page 108
  - T640 Four-Input 240-A DC Power Supply LEDs on page 111
  - T640 Six-Input DC Power Supply LEDs on page 113
  - T640 Three-Phase Delta and Wye AC Power Supply LEDs on page 117

Copyright © 2019, Juniper Networks, Inc.

Related Documentation

- T640 Chassis Description on page 15
- T640 Component Serial Number Label Locations on page 508
- Replacing a T640 Craft Interface on page 273

T640 Alarm Messages Overview

When the Routing Engine detects an alarm condition, it lights the red or yellow alarm LED on the craft interface as appropriate, trips the corresponding alarm relay contact on the CIP, and reports the cause of the alarm in the craft interface LCD.

To view a more detailed description of the alarm cause, issue the **show chassis alarms** CLI command:

```
user@host> show chassis alarms
```

There are two classes of alarm messages:chassis alarms and interface alarms:

- Chassis Alarm Messages on page 488
- Interface Alarm Messages on page 488

Chassis Alarm Messages

Chassis alarms indicate a problem with a chassis component such as the cooling system or power supplies.

Interface Alarm Messages

Interface alarms Indicate a problem with a specific network interface.

In Table 98 on page 488, the text in the column labeled “LCD Message” appears in the LCD. The text in the column labeled “CLI Message” appears in the output from the **show chassis alarms** command.

Table 98: SONET/SDH Interface Alarm Messages

LCD Message	CLI Message
interface-name so-*x/x/x* BERR-SD	*interface-name* so-*x/x/x* - SONET bit error rate defect
interface-name so-*x/x/x* BERR-SF	*interface-name* so-*x/x/x* - SONET bit error rate fault
interface-name so-*x/x/x* LAIS	*interface-name* so-*x/x/x* - SONET line AIS
interface-name so-*x/x/x* LOF	*interface-name* so-*x/x/x* - SONET loss of frame
interface-name so-*x/x/x* LOL	*interface-name* so-*x/x/x* - SONET loss of light
interface-name so-*x/x/x* LOP	*interface-name* so-*x/x/x* - SONET loss of pointer
interface-name so-*x/x/x* LOS	*interface-name* so-*x/x/x* - SONET loss of signal

Copyright © 2019, Juniper Networks, Inc.

Table 98: SONET/SDH Interface Alarm Messages (continued)

LCD Message	CLI Message
interface-name so-*x/x/x* LRDI	*interface-name* so-*x/x/x* - SONET line remote defect indicator
interface-name so-*x/x/x* PAIS	*interface-name* so-*x/x/x* - SONET path AIS
interface-name so-*x/x/x* PLL	*interface-name* so-*x/x/x* - SONET PLL lock
interface-name so-*x/x/x* PMIS	*interface-name* so-*x/x/x* - SONET path mismatch
interface-name so-*x/x/x* PRDI	*interface-name* so-*x/x/x* - SONET path remote defect indicator
interface-name so-*x/x/x* REI	*interface-name* so-*x/x/x* - SONET remote error indicator
interface-name so-*x/x/x* SEF	*interface-name* so-*x/x/x* - SONET severely errored frame
interface-name so-*x/x/x* UNEQ	*interface-name* so-*x/x/x* - SONET unequipped

Related Documentation

- T640 Chassis Description on page 15
- T640 Craft Interface Alarm LEDs and ACO/LT Button on page 23
- Replacing a T640 Craft Interface on page 273

Troubleshooting the T640 Craft Interface

Problem

Description:

The following alarms, LEDs, and other conditions indicate a problem with the craft interface:

- The router is powered on, but none of the LEDs on the craft interface are lit.
- A yellow alarm indicates that the craft interface has failed.

In Table 99 on page 489, the text in the column labeled "LCD Message" appears in the display of the craft interface. The text in the column labeled "CLI Message" appears in the output from the **show chassis alarms** command.

Table 99: T640 Chassis Alarm Messages

Alarm Type	LCD Message	CLI Message
Yellow	**Craft Failure**	**Craft Failure**

Solution To troubleshoot the T640 craft interface:

1. Check the LEDs on the craft interface.

2. Use the CLI to check for alarms.
   - Standalone T640 router—Issue the **show chassis alarms** command to view the alarms.
   - T640 router in a routing matrix—Issue the **show chassis alarms lcc** ***lcc-number*** command to view the alarms.

Related Documentation
- T640 Craft Interface Description on page 22

Troubleshooting the T640 SONET Clock Generators

Problem **Description:**

The following alarms and LEDs indicate a problem with an SCG:

- The yellow **FAIL** LED on the SCG faceplate is lit.
- The green **OK** LED on the SCG faceplate is not lit.
- A red alarm indicates that an SCG, SCG voltage sensor, or the internal clock has failed.
- A red alarm indicates that there are no SCGs online.
- A red alarm indicates that loss of signal has occurred from an external clocking device connected to the RJ-48 **A**or **B** port.
- A yellow alarm indicates that an SCG is not online in a router with redundant SCGs or that an SCG has been removed..
- A yellow alarm indicates that a temperature sensor has failed.

In Table 100 on page 491, the text in the column labeled ”LCD Message” appears in the display of the craft interface. The text in the column labeled “CLI Message” appears in the output from the **show chassis alarms** command.

 Copyright © 2019, Juniper Networks, Inc.

Table 100: SCG Alarm Messages

Alarm Type	LCD Message	CLI Message
Red	**RED ALARM—SCG** *SCG-number* **Failure**	**RED ALARM—SCG** *SCG-number* **Failure**
	RED ALARM—No SCG Online	**RED ALARM—No SCG Online**
	RED ALARM—SCG *SCG-number* **Volt Snsr Fail**	**RED ALARM—SCG** *SCG-number* **Volt Sensor Fail**
	RED ALARM—SCG *SCG-number* **Ext-A LOS**	**RED ALARM—SCG** *SCG-number* **External-A LOS**
	RED ALARM—SCG *SCG-number* **Ext-B LOS**	**RED ALARM—SCG** *SCG-number* **External-B LOS**
	RED ALARM—SCG *SCG-number* **INT CLK Fail**	**RED ALARM—SCG** *SCG-number* **Internal Clock Failure**
Yellow	**YELLOW ALARM—SCG** *SCG-number* **Not Online**	**YELLOW ALARM—SCG** *SCG-number* **Not Online**
	YELLOW ALARM—SCG *SCG-number* **Removed**	**YELLOW ALARM—SCG** *SCG-number* **Removed**
	YELLOW ALARM—SCG *SCG-number* **TmpSnsr Fail**	**YELLOW ALARM—SCG** *SCG-number* **Temp Sensor Fail**

Solution To troubleshoot the SCGs:

1. Check the LEDs on the faceplate of each SCG and on the craft interface.

2. Use the CLI to check for alarms.
   - Standalone router—Issue the **show chassis alarms** command to view the alarms.
   - Router in a routing matrix—Issue the **show chassis alarms lcc *lcc-number*** command to view the alarms.

Related Documentation

- T640 SONET Clock Generators (SCGs) LEDs on page 28
- T640 SONET Clock Generators (SCGs) Description on page 27

Troubleshooting the T640 Cooling System

Problem Description:

The following alarms, LEDs, and other conditions indicate a problem with the cooling system:

- A red alarm indicates that temperature of the router exceeds the maximum (“temperature hot”) threshold.
- Automatic shutdown of the power supplies was caused by the temperature of the router exceeding the maximum (“temperature hot”) threshold. The control board turns off the power supplies because the router temperature exceeds the acceptable maximum.
- A red alarm indicates that a fan failed.
- A yellow alarm indicates that the router temperature exceeds the “temperature warm” threshold.
- A yellow alarm indicates that one of the fan trays was removed.
- One or more fans in a fan tray function at full speed. The control boards constantly monitor the temperatures detected by sensors on the midplane and router components, adjusting the speed of the fans as necessary.

In Table 101 on page 492, the text in the column labeled ”LCD Message” appears in the display of the craft interface. The text in the column labeled “CLI Message” appears in the output from the **show chassis alarms** command.

Table 101: T640 Cooling System Alarm Messages

Component	Alarm Type	LCD Message	CLI Message	Alarm Condition	Solution
Fans	Red	**Fan Failure**	***fan-name* Failure**	A fan has failed.	Replace the fan tray.
		Fans Missing	**Too many fans missing or failing**	A fan tray is missing or too many fan trays have failed.	Reinstall the fan tray in the chassis.
	Yellow	**Fan Removed**	***fan-name* Removed**	A fan tray has been removed.	Reinstall the fan tray in the chassis.
		Mix of FAN-TRAYS	**Minor – Mix of FAN-TRAYS**	A mix of standard front fan trays and quiet front fan trays are installed in the chassis. NOTE: During normal operations, mixing the standard and quiet fan trays is not supported.	Check that all fan trays are either standard fan trays or quiet fan trays. Install the correct fan trays. NOTE: During an upgrade, ignore this alarm.

Copyright © 2019, Juniper Networks, Inc.

Table 101: T640 Cooling System Alarm Messages (continued)

Component	Alarm Type	LCD Message	CLI Message	Alarm Condition	Solution
Temperature sensors	Red	**Temperature Hot**	**Temperature Hot**	The chassis temperature exceeded the hot temperature threshold. If this condition persists, the router shuts down.	• Verify that the room temperature is within acceptable limits. • Verify that there is sufficient air flow. • Verify that the cooling system in the chassis is operating properly.
		Sensor Failure	**Temperature sensor failure**	A temperature sensor failed.	Contact JTAC.
	Yellow	**Temperature Warm**	**Temperature Warm**	The chassis temperature exceeded the warm temperature threshold.	• Verify that the room temperature is within acceptable limits. • Verify that there is sufficient air flow. • Verify that the cooling system in the chassis is operating properly.

Solution To troubleshoot the cooling system:

1. Place your hand near the exhaust vents at the rear of the chassis to determine whether the fans are pushing air out of the chassis.

2. If the red alarm LED on the craft interface lights, look at the craft interface display to find the source of the problem. The number of alarm conditions, as well as the source of each alarm, appears on the screen.

Copyright © 2019, Juniper Networks, Inc.

3. If the craft interface display lists only one fan failure and the other fans are functioning normally, the fan is probably faulty and you need to replace the fan tray.

4. Use the CLI to check the status of the fans. For example, you can issue the following command to get information about the source of an alarm condition:

   ```
   user@host> show chassis alarms
   ```

   For information about the alarms, see Table 101 on page 492.

Related Documentation

- T640 Cooling System Description on page 31
- Maintaining the T640 Air Filters on page 464
- Maintaining the T640 Fan Trays on page 465
- Replacing a T640 Air Filter on page 289

Troubleshooting the T640 Host Subsystem

Problem

Description:

The following alarms and LEDs indicate a problem with a host subsystem control board or Routing Engine:

- The red host subsystem **FAIL** LED on the craft interface is lit.
- The green host subsystem **OK** LED on the craft interface is not lit.
- A red alarm indicates that the host subsystem has been removed.
- A yellow alarm indicates that the host subystem has failed.

In Table 102 on page 494, the text in the column labeled ”LCD Message” appears in the display of the craft interface. The text in the column labeled “CLI Message” appears in the output from the **show chassis alarms** command.

Table 102: T640 Host Subsystem Alarm Messages

Component	Alarm Type	LCD Message	CLI Message
Host subsystems	Red	**Host *host-number* Removed**	**Host *host-number* Removed**
	Yellow	**Host *host-number* Failure**	**Host *host-number* Failure**

Solution

To troubleshoot the T640 host subsystems:

1. Check the LEDs on the faceplate of each control board and Routing engine.

2. Check the LEDs on the craft interface.

Copyright © 2019, Juniper Networks, Inc.

3. Use the CLI to check for alarms.
   - Standalone T640 router—Issue the **show chassis alarms** command to view the alarms.
   - T640 router in a routing matrix—Issue the **show chassis alarms lcc** *lcc-number* command to view the alarms.

Related Documentation

- T640 Host Subsystem Description on page 35
- T640 Craft Interface Description on page 22
- T640 LCC-CB LEDs on page 68
- T640 T Series Control Boards (T-CBs) LEDs on page 72
- T640 RE-600 LEDs on page 39
- T640 RE-1600 LEDs on page 41
- T640 RE-2000 LEDs on page 45
- T640 RE-C1800 LEDs on page 43
- Troubleshooting the T640 Control Board on page 495

Troubleshooting the T640 Control Board

Problem Description:

The following alarms and LEDs indicate a problem with a control board:

- The yellow **FAIL** LED on the control board faceplate is lit.
- The green **OK** LED on the control board faceplate is not lit.
- The red host subsystem **FAIL** LED on the craft interface is lit.
- The green host subsystem **OK** LED on the craft interface is not lit.
- A red alarm indicates that the control board has failed or has been removed.
- A yellow alarm indicates that the Ethernet switch in the control board has failed.

In Table 103 on page 495, the text in the column labeled ”LCD Message” appears in the display of the craft interface. The text in the column labeled “CLI Message” appears in the output from the **show chassis alarms** command.

Table 103: Control Board Alarm Messages

Alarm Type	LCD Message	CLI Message
Red	CB *cb-number* Removed	CB *cb-number* Removed
	CB *cb-number* Failure	CB *cb-number* Failure
Yellow	CB *cb-number* Ethernet Switch Failure	CB *cb-number* Ethernet Switch Failure

Solution To troubleshoot the T640 control boards:

1. Check the LEDs on the faceplate of each control board.
2. Check the LEDs on the craft interface.
3. Use the CLI to check for alarms.
   - Standalone T640 router—Issue the **show chassis alarms** command to view the alarms.
   - T640 router in a routing matrix—Issue the **show chassis alarms lcc** ***lcc-number*** command to view the alarms.

Related Documentation

- *T640 Control Boards Description*
- T640 LCC-CB Description on page 67
- T640 LCC-CB LEDs on page 68
- T640 T Series Control Boards (T-CBs) Description on page 70
- T640 T Series Control Boards (T-CBs) LEDs on page 72
- Replacing a T640 LCC-CB on page 322
- Replacing a T640 Standard Control Board or T-CB on page 325

Troubleshooting the T640 FPCs

Problem **Description:**

The following LEDs indicate a problem:

- The red **FAIL** LED above the FPC on the craft interface is lit.
- The OK for the FPC on the craft interface is off.

Solution

- If the red **FAIL** LED above the FPC is on, look at the display on the craft interface to check the status of the FPC and the PICs that are plugged into it.
- Make sure the FPC is properly seated in the midplane. Verify that each ejector handle has been turned clockwise and is tight. Use a screwdriver to verify that the screws inside the ejector handles are tight.
- To check the status of an FPC, use the following CLI command:

  ```
  user@host> show chassis fpc
  ```

  To display more detailed information, use the following option:

  ```
  user@host> show chassis fpc detail
  ```

 Copyright © 2019, Juniper Networks, Inc.

Table 104: FPC Alarm Messages

Alarm Type	Craft Interface Message	CLI Message
Major	FPC *fpc-number* unreachable PFEs detected	FPC *fpc-number* has unreachable destinations

Related Documentation

- T640 Craft Interface Description on page 22
- T640 FPC Description on page 73
- Replacing a T640 FPC on page 345

Troubleshooting the T640 PICs

Problem **Description:** The PICs are not functioning normally.

Solution To troubleshoot the PICs:

- To check the status of each port on a PIC, look at the LED located on the PIC faceplate. For information about the meaning of LED states on different PICs, see the *T640 Core Router Interface Module Reference*.
- To check the status of a PIC, issue the following CLI command. The PIC slots in the FPC are numbered from **0** through **3**, top to bottom:

  `user@host>` **show chassis fpc pic-status**

  ```
  Slot 0   Online       E-FPC Type 3
    PIC 0  Online       1x 10GE(LAN),DWDM
    PIC 2  Present      1x OC-192 SONET XFP- Hardware Error
    PIC 3  Online       1x 10GE(LAN),XENPAK
  Slot 2   Online       E2-FPC Type 2
    PIC 0  Online       1x OC-48 SONET, SMIR
    PIC 1  Online       2x OC-12 ATM-II IQ, MM
    PIC 2  Online       8x 1GE(LAN), IQ2
  Slot 3   Online       FPC Type 3
    PIC 0  Online       1x 10GE(LAN),XENPAK
    PIC 1  Online       1x 10GE(LAN),XENPAK
    PIC 2  Online       8x 1GE(TYPE3), IQ2
    PIC 3  Online       8x 1GE(TYPE3), IQ2
  Slot 4   Online       FPC Type 4
    PIC 0  Online       4x OC-192 SONET XFP
  Slot 6   Online       FPC Type 3
    PIC 0  Online       4x OC-48 SONET
    PIC 1  Online       1x Tunnel
  Slot 7   Online       FPC Type 4
    PIC 0  Online       1x OC-768 SONET SR
  ```

  For further description of the output from the command, see *show chassis environment fpc*.

Related Documentation

- T640 PIC Description on page 85
- Maintaining T640 PICs and PIC Cables on page 476
- Replacing a T640 PIC on page 352

Troubleshooting the T640 Power System

Problem Description:

The following alarms, LEDs, and other conditions indicate a problem with the power system:

- If all power supplies have failed, the system temperature might have exceeded the threshold, causing the system to shut down.
- The following indicate a problem on a two-input 160-A DC power supply:
  - The **DC OK** and **CB OK** LEDs are off.
  - If the yellow **CB TRIP** LED lights but the power supply is not going through a startup test, the power supply detects a fault (the power supply fails, does not have sufficient airflow, or is not properly inserted).
  - The yellow **OVER TEMP** LED lights when the power supply is not receiving enough airflow to maintain proper temperature.
- The following indicate a problem on a three-input 240-A DC power supply or four-input 240-A DC power supply:
  - The blue **DC OK** LED is off.
  - If the blue **DC OK** LED blinks but is not going through a startup test, the power supply detects a fault (the power supply fails, does not have sufficient airflow, or is not properly inserted).
  - The yellow **OVER TEMP** LED lights when the power supply is not receiving enough airflow to maintain proper temperature.
  - The **INPUT PRESENT** LED is off, indicating that the input is not receiving source DC power.
  - If the **INPUT PRESENT** LED is lit but the **CB ON** LED is off, it indicates that the circuit breaker is off.
- The following indicate a problem on a six-input DC power supply:
  - The yellow **OVER TEMP** LED lights when a power supply is not receiving enough airflow to maintain proper temperature.
  - The green **INPUT PRESENT** LED for each input on a DC power supply does not light if the input is not connected or is not receiving source DC power.

Copyright © 2019, Juniper Networks, Inc.

  - The blue **DC OK** LED is not lit when the power switch on the power supply faceplate is off, or when a power supply is not functioning normally or is not receiving voltage.

- The following indicate a problem on a three-phase delta or wye AC power supply:
  - The green **AC OK** LED is off when the power supply is not receiving source AC power.
  - The blue **DC OK** LED is off.
  - If the blue **DC OK** LED blinks but is not going through a startup test, the power supply detects a fault (the power supply fails, does not have sufficient airflow, or is not properly inserted).
  - The yellow **OVER TEMP** LED lights when the power supply is not receiving enough airflow to maintain proper temperature.

In Table 105 on page 499, the text in the column labeled "LCD Message" appears in the display of the craft interface. The text in the column labeled "CLI Message" appears in the output from the **show chassis alarms** command.

Table 105: T640 Power Supply Alarm Messages

Alarm Type	LCD Message	CLI Message
Red	PEM *pem-number* Over Temp	PEM *pem-number* Over Temperature
	PEM *pem-number* Output Fail	PEM *pem-number* Output Failure
	PEM *pem-number* Input Fail	PEM *pem-number* Input Failure
Yellow	PEM *pem-number* Removed	PEM *pem-number* Removed
	PEM *pem-number* Inputs Cfg	PEM *pem-number* Configuration Mismatch-number of inputs

Solution To troubleshoot the T640 power system:

1. If the **OVER TEMP** LED on one of the power supplies lights, check the fans and air filters in the chassis to be sure they are functioning and providing sufficient airflow.

2. Check the display on the craft interface. The Junos OS constantly updates the screen with status information for each component. For more information about the display, see "T640 Craft Interface Description" on page 22.

NOTE: **On the display and in the CLI, the power supplies are referred to as PEM0 and PEM1, from top to bottom.**

NOTE: If the system temperature exceeds the threshold, the Junos OS shuts down all power supplies so that no status is displayed on the craft interface.

The Junos OS also can shut down one of the power supplies for other reasons. In this case, the remaining power supply assumes the load, and you can still view the system status through the CLI or display.

3. If a red alarm condition occurs, check the display on the craft interface to determine the source of the problem.

4. If the **DC OK** LED is not lit on one or both of the power supplies,
   - Check the power supply fans to see if they are operating.
   - Check the red alarm LED on the craft interface. The Junos OS monitors the system temperature, and if it exceeds a certain limit, the software triggers a red alarm, a condition that shuts down the power supplies.

     If no red alarm condition exists, verify that the circuit breaker on the two-input 180-A DC power supply, three-input 240-A DC power supply, or four-input 240-A DC power supply, or that the power switch on the AC power supply or six-input DC power supply is switched to the on position (**|**).

5. Verify that the source circuit breaker is on and that the power supply is receiving voltage. If the **AC OK** on AC power supplies or **INPUT PRESENT** LEDs on a three-input 240-A DC power supply or four-input 240-A power DC supply are not lit, it indicates that the power supply is not receiving source power.

6. Verify that the source circuit breaker has the proper current rating. Each input on each power supply must be connected to a separate circuit breaker.

7. Verify that the AC power cord or DC power cables from the power source to the router are not damaged. If the insulation is cracked or broken, immediately replace the damaged cable or cord.

8. Connect the power supply to a different power source with a new DC power cable or AC power cord. If the power supply **DC OK** LED still does not light, the power supply is the source of the problem. Replace the power supply with a spare.

9. If the **DC OK** LED on the installed spare lights, the replaced power supply is faulty. Return it for replacement, as described in "Returning a Hardware Component to Juniper Networks, Inc." on page 515.

10. If you cannot determine the cause of the problem or need additional assistance, see "Contacting Customer Support" on page 505.

 Copyright © 2019, Juniper Networks, Inc.

Related Documentation

- T640 Power System Description on page 103
- Replacing a T640 Two-Input 160-A DC Power Supply on page 363
- Replacing a T640 Three-Input 240-A DC Power Supply on page 370
- Replacing a T640 Four-Input 240-A DC Power Supply on page 382
- Replacing a T640 Six-Input DC Power Supply on page 395
- Replacing a T640 DC Power Supply Cable on a Two-Input 160-A Power Supply, Three-Input 240-A DC Power Supply, or a Four-Input 240-A DC Power Supply on page 388
- Replacing a T640 DC Power Supply Cable on a Six-Input DC Power Supply on page 401
- Replacing a T640 Three-Phase Delta AC Power Supply on page 412
- Replacing a T640 Three-Phase Delta AC Power Supply Cord on page 420
- Replacing a T640 Three-Phase Wye AC Power Supply on page 426
- Replacing a T640 Three-Phase Wye AC Power Supply Cord on page 433
- T640 General Electrical Safety Guidelines and Electrical Codes on page 551

Troubleshooting the T640 SIBs

Problem Description:

The following alarms and LEDs indicate a problem with a SIB:

- The yellow **FAIL** LED on the SIB faceplate is lit.
- The green **OK** LED on the SIB faceplate is not lit.
- A red alarm indicates that the SIB failed or has been removed.
- A yellow alarm indicates that a spare SIB has failed or has been removed.

In Table 106 on page 501, the text in the column labeled "LCD Message" appears in the display of the craft interface. The text in the column labeled "CLI Message" appears in the output from the **show chassis alarms** command.

Table 106: SIB Alarm Messages

Alarm Type	LCD Message	CLI Message
Red	SIB *sib-number* Failure	SIB *sib-number* Fault
	SIB *sib-number* Removed	SIB *sib-number* Absent
Yellow	Spare SIB Failure	Spare SIB Fault
	Spare SIB Removed	Spare SIB Absent
	Check SIB	Check SIB

Copyright © 2019, Juniper Networks, Inc.

Solution To troubleshoot the T640 SIBs:

1. Check the LEDs on the faceplate of each SIB.
2. Check the LEDs on the craft interface.
3. Use the CLI to check for alarms.
   - Standalone T640 router—Issue the **show chassis alarms** command to view the alarms.
   - T640 router in a routing matrix—Issue the **show chassis alarms lcc** ***lcc-number*** command to view the alarms.

Related Documentation

- T640 Switch Interface Boards (SIBs) Description on page 119
- *T640 Switch Interface Boards (SIBs) LEDs*

 Copyright © 2019, Juniper Networks, Inc.

PART 7

Contacting Customer Support and Returning the Chassis or Components

- Contacting Customer Support on page 505
- Locating Component Serial Numbers on page 507
- Packing and Returning Components on page 515

Copyright © 2019, Juniper Networks, Inc.

CHAPTER 34

Contacting Customer Support

- Contacting Customer Support on page 505

Contacting Customer Support

You can contact Juniper Networks Technical Assistance Center (JTAC) 24 hours a day, 7 days a week in one of the following ways:

- On the Web, using the Service Request Manager link at:

  https://support.juniper.net/support/

- By telephone:
  - From the US and Canada: 1-888-314-JTAC
  - From all other locations: 1-408-745-9500

NOTE: **If contacting JTAC by telephone, enter your 12-digit service request number followed by the pound (#) key if this is an existing case, or press the star (*) key to be routed to the next available support engineer.**

When requesting support from JTAC by telephone, be prepared to provide the following information:

- Your existing service request number, if you have one
- Details of the failure or problem
- Type of activity being performed on the device when the problem occurred
- Configuration data displayed by one or more **show** commands
- Your name, organization name, telephone number, fax number, and shipping address

The support representative validates your request and issues an RMA number for return of the component.

Copyright © 2019, Juniper Networks, Inc.

Copyright © 2019, Juniper Networks, Inc.

CHAPTER 35

Locating Component Serial Numbers

- Locating T640 Component Serial Numbers Using the CLI on page 507
- T640 Component Serial Number Label Locations on page 508

Locating T640 Component Serial Numbers Using the CLI

Before contacting Juniper Networks, Inc. to request a Return Materials Authorization (RMA), you must find the serial number on the router or component. To list all of the router components and their serial numbers, enter the following command-line interface (CLI) command:

```
user@host> show chassis hardware
Hardware inventory:
Item             Version  Part number  Serial number     Description
Chassis                                19227             T640
Midplane         REV 04   710-002726   AX5632
FPM GBUS         REV 02   710-002901   HE3247
FPM Display      REV 02   710-002897   HA4866
CIP              REV 05   710-002895   HC0472
PEM 0            Rev 03   740-002595   MJ10270           Power Entry Module
SCG 1            REV 04   710-003423   HF6033
Routing Engine 0 REV 10   740-005022   P10865702813      RE-3.0
Routing Engine 1 REV 01   740-005022   210928800105      RE-3.0
CB 0             REV 06   710-002728   HE3624
CB 1             REV 06   710-002728   HE3616
FPC 2            REV 05   710-007529   HL7801            FPC Type 3
  CPU            REV 14   710-001726   HJ7092
  PIC 0          REV 01   750-004535   HC0745            1x OC-192 SM SR1
  PIC 1          REV 01   750-004535   HD5424            1x OC-192 SM SR1
  PIC 2          REV 01   750-004535   HD5552            1x OC-192 SM SR2
  PIC 3          REV 01   750-004535   HD5416            1x OC-192 SM SR1
  MMB 0          REV 02   710-005555   HL7303            MMB-288mbit
  MMB 1          REV 02   710-005555   HL7167            MMB-288mbit
  PPB 0          REV 04   710-002845   HM4429            PPB Type 3
  PPB 1          REV 04   710-002845   HM4433            PPB Type 3
SPMB 0           REV 02   710-003229   HF6877
SPMB 1           REV 02   710-003229   HD5513
SIB 0            REV 01   710-005157   HJ9026            SIB-I8-F16
SIB 1            REV 01   710-005157   HJ4791            SIB-I8-F16
SIB 2            REV 01   710-005157   HJ4774            SIB-I8-F16
SIB 3            REV 01   710-005157   HJ4792            SIB-I8-F16
SIB 4            REV 01   710-005157   HJ4793            SIB-I8-F16
```

Most components also have a small rectangular serial number ID label (see Figure 237 on page 508) attached to the component body.

Figure 237: Serial Number ID Label

Related Documentation

- T640 Router Description on page 3
- T640 Chassis Description on page 15

T640 Component Serial Number Label Locations

- Control Board Serial Number Label on page 508
- CIP Serial Number Label on page 509
- Craft Interface Serial Number Label on page 509
- FPC Serial Number Label on page 510
- PIC Serial Number Label on page 510
- Power Supply Serial Number Label on page 511
- Routing Engine Serial Number Label on page 512
- SCG Serial Number Label on page 513
- SIB Serial Number Label on page 513

Control Board Serial Number Label

The location of the serial number label varies depending on the control board. The T-CB serial number is located on the top of the control board (see Figure 238 on page 508).

Figure 238: T-CB Serial Number Label

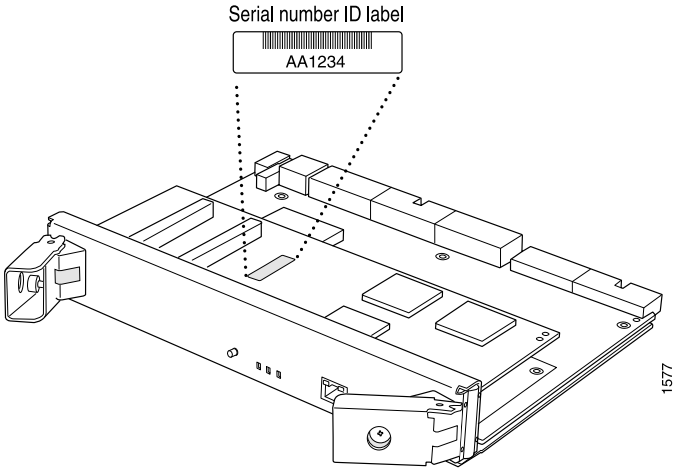

Copyright © 2019, Juniper Networks, Inc.

The LCC-CB serial number is located on the lower right side of the control board (see Figure 239 on page 509).

Figure 239: LCC-CB Serial Number Label

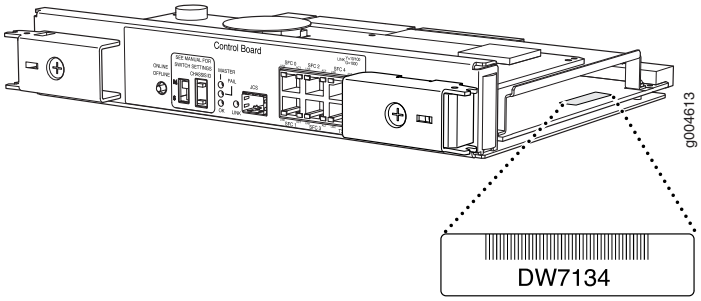

CIP Serial Number Label

The serial number label is located at the top of the left side of the CIP (see Figure 240 on page 509).

Figure 240: CIP Serial Number Label

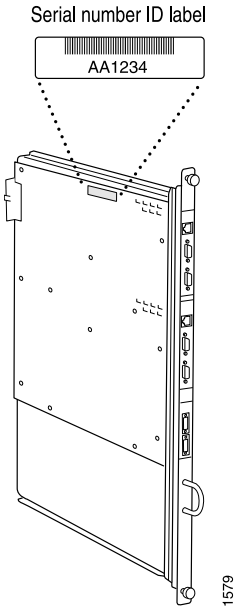

Craft Interface Serial Number Label

The serial number is located on the back of the craft interface panel, behind the alarm LEDs (see Figure 241 on page 510).

Figure 241: Craft Interface Serial Number Label

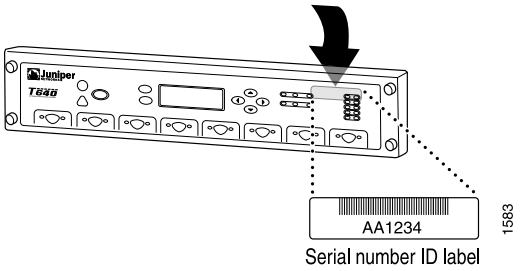

FPC Serial Number Label

The location of the serial number label varies depending on the FPC:

- Type 1 FPCs: located near the top PIC slot
- Type 2 FPCs: located near the top PIC slot
- Type 3 FPCs: located center of the right side
- Type 4 FPCs: located center left near the top of the FPC

For example, Figure 242 on page 510 shows the serial number location for a Type 4 FPC.

Figure 242: FPC Serial Number Label

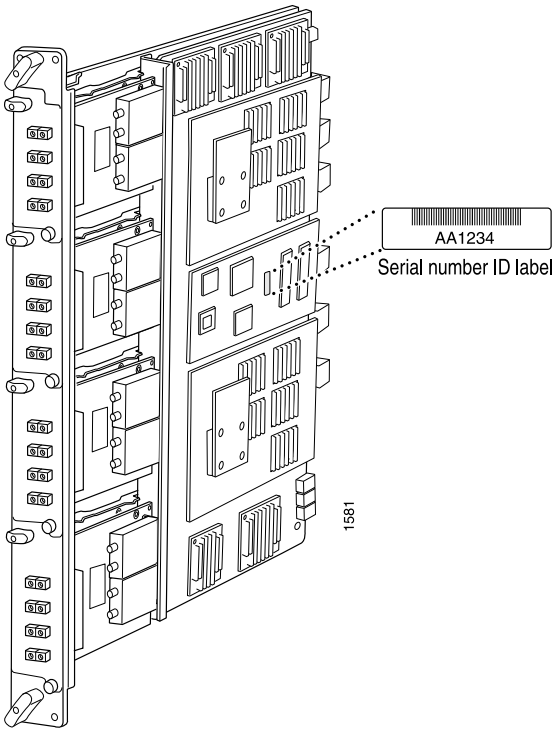

PIC Serial Number Label

The exact location serial number label is different on different PICs, depending on the placement of components on the PIC board. In this example, the serial number label is

Copyright © 2019, Juniper Networks, Inc.

located on the right side of the PIC (see Figure 243 on page 511), when the PIC is vertically oriented (as it would be installed in the router).

Figure 243: PIC Serial Number Label

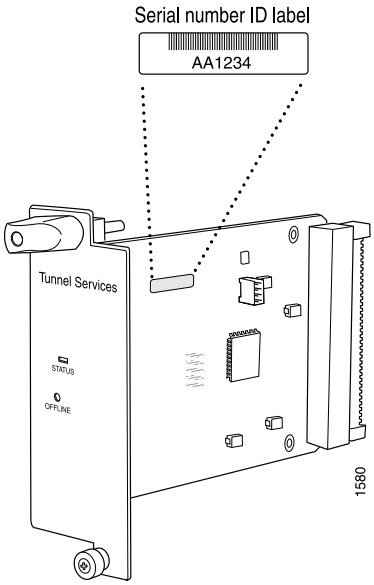

Power Supply Serial Number Label

For the two-input 160-A DC power supply, the serial number label is located on the left side of the power supply faceplate (see Figure 244 on page 511 and Figure 245 on page 512).

Figure 244: Two-Input 160-A DC Power Supply Serial Number Label

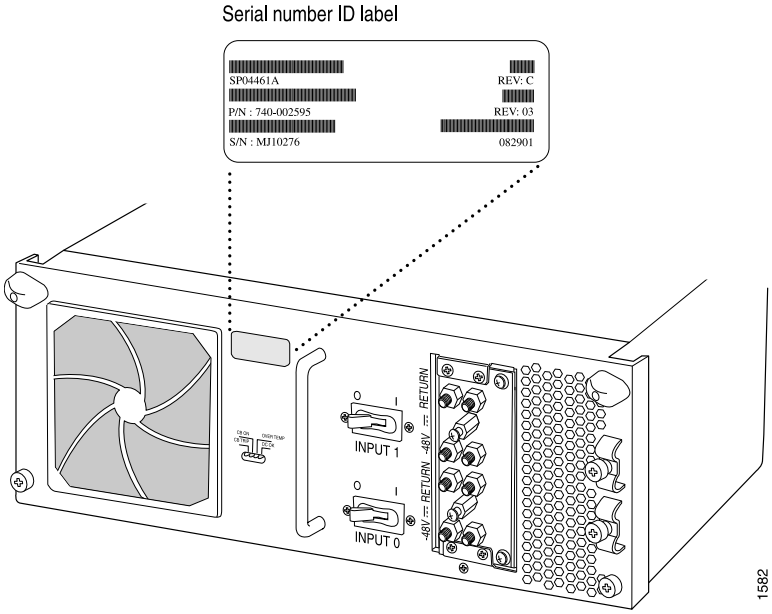

For the three-input 240-A DC power supply, the serial number label is located on the left side of the power supply faceplate (see Figure 245 on page 512).

Figure 245: Three-Input 240-A DC Power Supply Serial Number Label

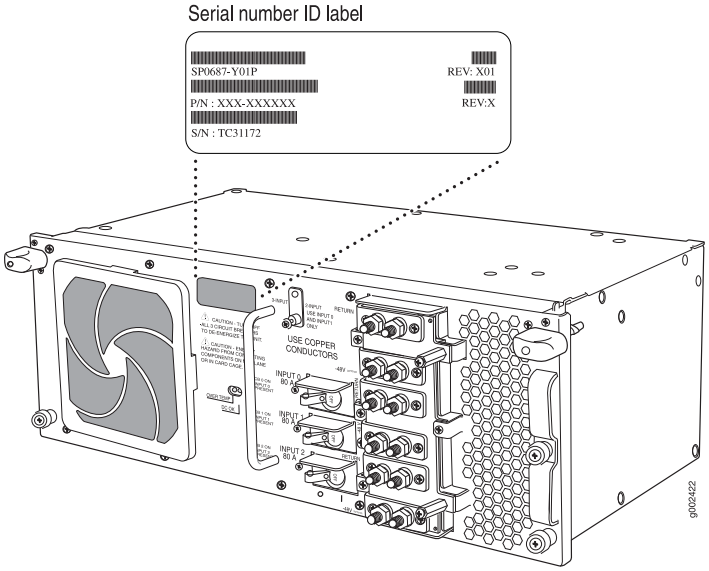

For the six-input DC power supply, the serial number label is located on the lower left side of the faceplate. (see Figure 246 on page 512).

Figure 246: Six-Input DC Power Supply Serial Number Label

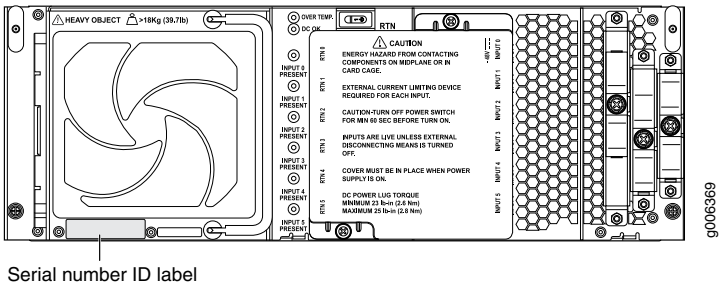

Routing Engine Serial Number Label

The serial number label is located on the right side of the top of the Routing Engine (see Figure 247 on page 513).

Copyright © 2019, Juniper Networks, Inc.

Figure 247: Routing Engine Serial Number Label

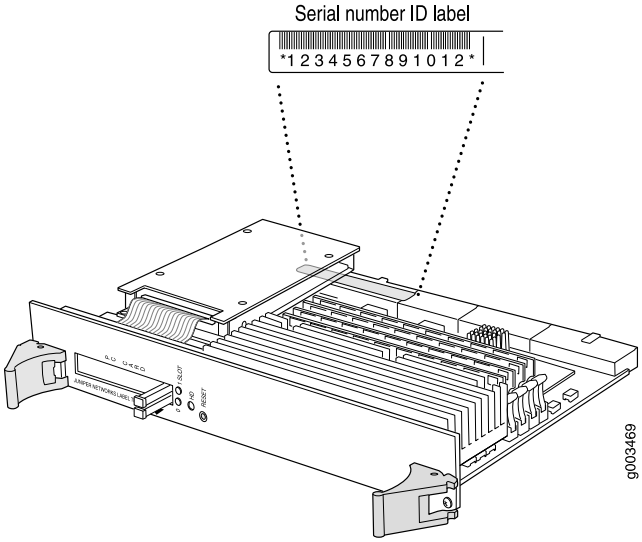

SCG Serial Number Label

The serial number is located on the top of the SCG, close to the midplane connector (see Figure 248 on page 513).

NOTE: Although the illustration shows the SCG with DB-9 ports, the serial number location is the same for the SCG with RJ-48 ports.

Figure 248: SCG Serial Number Label

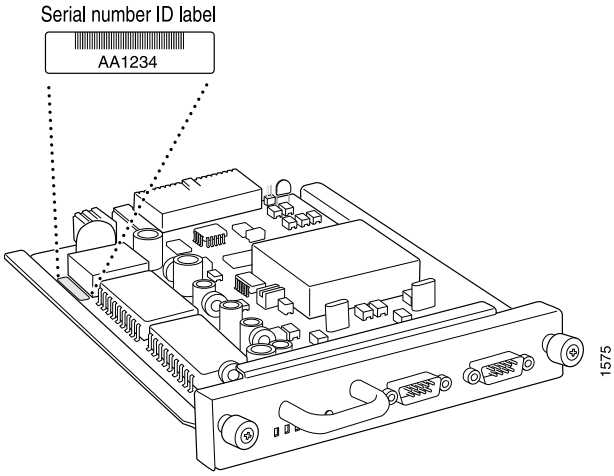

SIB Serial Number Label

For the standard SIB or SIB version B, the serial number label is located on the right side of the top of the SIB (see Figure 249 on page 514).

Figure 249: Standard SIB and SIB Version B Serial Number Label

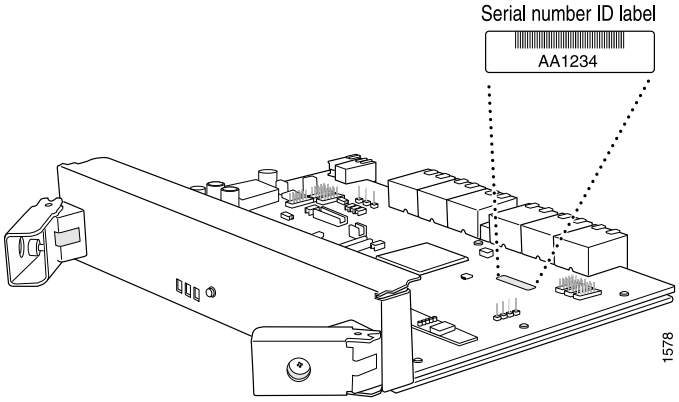

For the LCC-SIB, the serial number label is located on the left side of the SIB (see Figure 250 on page 514).

Figure 250: LCC-SIB Serial Number Label

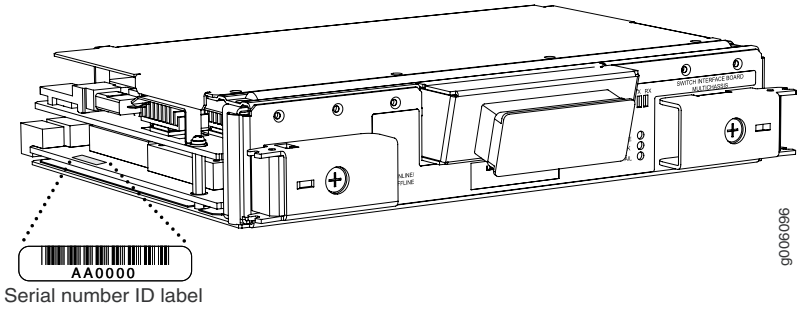

Related Documentation

- Locating T640 Component Serial Numbers Using the CLI on page 507
- Contacting Customer Support on page 505
- Returning a Hardware Component to Juniper Networks, Inc. on page 515

Copyright © 2019, Juniper Networks, Inc.

CHAPTER 36

Packing and Returning Components

- Returning a Hardware Component to Juniper Networks, Inc. on page 515
- Tools and Parts Required to Remove Components from a T640 Router on page 516
- Packing the T640 Router for Shipment on page 516
- Packing T640 Router Components for Shipment on page 518

Returning a Hardware Component to Juniper Networks, Inc.

If a hardware component fails, please contact Juniper Networks, Inc. to obtain a Return Material Authorization (RMA) number. This number is used to track the returned material at the factory and to return repaired or new components to the customer as needed.

NOTE: **Do not return any component to Juniper Networks, Inc. unless you have first obtained an RMA number. Juniper Networks, Inc. reserves the right to refuse shipments that do not have an RMA. Refused shipments are returned to the customer by collect freight.**

For more information about return and repair policies, see the customer support webpage at https://support.juniper.net/support/.

For product problems or technical support issues, contact the Juniper Networks Technical Assistance Center (JTAC) by using the Service Request Manager link at https://support.juniper.net/support/ or at 1-888-314-JTAC (within the United States) or 1-408-745-9500 (from outside the United States).

To return a defective hardware component:

1. Determine the part number and serial number of the defective component.

2. Obtain an RMA number from the Juniper Networks Technical Assistance Center (JTAC). You can send e-mail or telephone as described above.

3. Provide the following information in your e-mail message or during the telephone call:
   - Part number and serial number of component
   - Your name, organization name, telephone number, and fax number

- Description of the failure

4. The support representative validates your request and issues an RMA number for return of the component.

5. Pack the component for shipment.

Tools and Parts Required to Remove Components from a T640 Router

To remove components from the router or the router from a rack, you need the following tools and parts:

- 2.5-mm flat-blade (–) screwdriver, for detaching alarm relay terminal block
- 7/16-in. (11 mm) nut driver
- Blank panels to cover empty slots
- Electrostatic bag or antistatic mat, for each component
- Electrostatic discharge (ESD) grounding wrist strap
- Flat-blade (–) screwdriver
- Mechanical lift, if available
- Phillips (+) screwdrivers, numbers 1 and 2
- Rubber safety cap for fiber-optic interfaces or cable
- Wire cutters

Related Documentation

- T640 Router Description on page 3
- T640 Chassis Description on page 15
- Locating T640 Component Serial Numbers Using the CLI on page 507

Packing the T640 Router for Shipment

To pack the router for shipment:

1. Retrieve the shipping crate and packing materials in which the router was originally shipped. If you do not have these materials, contact your Juniper Networks representative about approved packaging materials.

2. Attach an electrostatic discharge (ESD) grounding strap to your bare wrist, and connect the strap to one of the ESD points on the chassis.

3. On the console or other management device connected to the master Routing Engine, enter CLI operational mode and issue the following command to shut down the router software. (If two Routing Engines are installed, also issue the command on the backup Routing Engine.)

Copyright © 2019, Juniper Networks, Inc.

```
user@host> request system halt
```

Wait until a message appears on the console confirming that the operating system has halted.

For more information about the command, see the *request system halt*.

NOTE: **The SIB might continue forwarding traffic for approximately 5 minutes after the request system halt command has been issued.**

4. Shut down power to the router by pressing the power switch for all power supplies to the off (**O**) position.

5. Disconnect power from the router.

6. Remove the cables that connect to all external devices.

7. Remove all Field Replaceable Units (FRUs) from the router.

8. Remove the router from the rack:
   - If you are using a mechanical lift, place the lift platform under the router, unscrew and remove the mounting screws from the rack, and move the router to the shipping crate.
   - If you are not using a mechanical lift and the router weight is fully supported by a shelf or another router, unscrew and remove the mounting screws from the rack. Four people can then lift the router and move it to the shipping crate.
   - If you are not using a mechanical lift and the router weight is not fully supported by a shelf or another router, four people should grasp the router while a fifth person unscrews and removes the mounting screws from the rack. The four lifters can then move the router to the shipping crate.
9. Place the router in the shipping crate or onto the pallet. If on a pallet, bolt the router to the pallet.

10. Cover the router with an ESD bag and place the packing foam on top of and around the router.

11. Replace the accessory box on top of the packing foam.

12. Securely tape the box closed or place the crate cover over the router.

13. Write the RMA number on the exterior of the box to ensure proper tracking.

Copyright © 2019, Juniper Networks, Inc.

Related Documentation

- T640 Preventing Electrostatic Discharge Damage on page 528
- T640 Router Description on page 3
- Replacing a T640 PIC on page 352
- Replacing a T640 DC Power Supply Cable on a Two-Input 160-A Power Supply, Three-Input 240-A DC Power Supply, or a Four-Input 240-A DC Power Supply on page 388
- *Replacing the T640 Connections to Routing Engine Interface Ports*
- Locating T640 Component Serial Numbers Using the CLI on page 507

Packing T640 Router Components for Shipment

If the problem cannot be resolved by the JTAC technician, an RMA is issued. This number is used to track the returned material at the factory and to return repaired or new components to the customer as needed.

NOTE: **Do not return any component to Juniper Networks, Inc. unless you have first obtained an RMA number. Juniper Networks, Inc. reserves the right to refuse shipments that do not have an RMA. Refused shipments will be returned to the customer via collect freight.**

For more information about return and repair policies, see the customer support Web page at https://www.juniper.net/support/guidelines.html.

For product problems or technical support issues, contact the Juniper Networks Technical Assistance Center (JTAC) using the Case Manager link at http://www.juniper.net/support/, or at 1-888-314-JTAC (within the United States) or 1-408-745-9500 (from outside the United States).

When you need to return a component:

1. Determine the part number and serial number of the component.

2. Obtain a Return Materials Authorization (RMA) number from the Juniper Networks Technical Assistance Center (JTAC). You can send e-mail or telephone as described above.

3. Provide the following information in your e-mail message or during the telephone call:
   - Part number and serial number of component
   - Your name, organization name, telephone number, and fax number
   - Description of the failure

Copyright © 2019, Juniper Networks, Inc.

4. The support representative validates your request and issues an RMA number for return of the component.

5. Pack the router or component for shipment.

Related Documentation

- T640 Preventing Electrostatic Discharge Damage on page 528
- T640 Chassis Description on page 15
- Locating T640 Component Serial Numbers Using the CLI on page 507
- T640 Physical Specifications on page 127

Copyright © 2019, Juniper Networks, Inc.

Copyright © 2019, Juniper Networks, Inc.

PART 8

Safety and Compliance Information

- General Safety Guidelines and Warnings on page 523
- Fire Safety Requirements on page 531
- Installation Safety Guidelines and Warnings on page 533
- Laser and LED Safety Guidelines and Warnings on page 541
- Maintenance and Operational Safety Guidelines and Warnings on page 545
- Electrical Safety Guidelines and Warnings on page 551
- Agency Approvals and Compliance Statements on page 563

Copyright © 2019, Juniper Networks, Inc.

Copyright © 2019, Juniper Networks, Inc.

CHAPTER 37

General Safety Guidelines and Warnings

- Definition of Safety Warning Levels on page 523
- General Safety Guidelines for Juniper Networks Devices on page 525
- General Safety Warnings for Juniper Networks Devices on page 526
- T640 Preventing Electrostatic Discharge Damage on page 528

Definition of Safety Warning Levels

The documentation uses the following levels of safety warnings:

NOTE: You might find this information helpful in a particular situation, or might otherwise overlook it.

CAUTION: You must observe the specified guidelines to avoid minor injury or discomfort to you, or severe damage to the hardware device.

WARNING: This symbol alerts you to the risk of personal injury from a laser.

WARNING: This symbol means danger. You are in a situation that could cause bodily injury. Before you work on any equipment, be aware of the hazards involved with electrical circuitry and be familiar with standard practices for preventing accidents.

Waarschuwing Dit waarschuwingssymbool betekent gevaar. U verkeert in een situatie die lichamelijk letsel kan veroorzaken. Voordat u aan enige apparatuur gaat werken, dient u zich bewust te zijn van de bij elektrische schakelingen betrokken risico's en dient u op de hoogte te zijn van standaard maatregelen om ongelukken te voorkomen.

Varoitus Tämä varoitusmerkki merkitsee vaaraa. Olet tilanteessa, joka voi johtaa ruumiinvammaan. Ennen kuin työskentelet minkään laitteiston parissa,

Copyright © 2019, Juniper Networks, Inc.

ota selvää sähkökytkentöihin liittyvistä vaaroista ja tavanomaisista onnettomuuksien ehkäisykeinoista.

Attention Ce symbole d'avertissement indique un danger. Vous vous trouvez dans une situation pouvant causer des blessures ou des dommages corporels. Avant de travailler sur un équipement, soyez conscient des dangers posés par les circuits électriques et familiarisez-vous avec les procédures couramment utilisées pour éviter les accidents.

Warnung Dieses Warnsymbol bedeutet Gefahr. Sie befinden sich in einer Situation, die zu einer Körperverletzung führen könnte. Bevor Sie mit der Arbeit an irgendeinem Gerät beginnen, seien Sie sich der mit elektrischen Stromkreisen verbundenen Gefahren und der Standardpraktiken zur Vermeidung von Unfällen bewußt.

Avvertenza Questo simbolo di avvertenza indica un pericolo. La situazione potrebbe causare infortuni alle persone. Prima di lavorare su qualsiasi apparecchiatura, occorre conoscere i pericoli relativi ai circuiti elettrici ed essere al corrente delle pratiche standard per la prevenzione di incidenti.

Advarsel Dette varselsymbolet betyr fare. Du befinner deg i en situasjon som kan føre til personskade. Før du utfører arbeid på utstyr, må du vare oppmerksom på de faremomentene som elektriske kretser innebærer, samt gjøre deg kjent med vanlig praksis når det gjelder å unngå ulykker.

Aviso Este símbolo de aviso indica perigo. Encontra-se numa situação que lhe poderá causar danos físicos. Antes de começar a trabalhar com qualquer equipamento, familiarize-se com os perigos relacionados com circuitos eléctricos, e com quaisquer práticas comuns que possam prevenir possíveis acidentes.

¡Atención! Este símbolo de aviso significa peligro. Existe riesgo para su integridad física. Antes de manipular cualquier equipo, considerar los riesgos que entraña la corriente eléctrica y familiarizarse con los procedimientos estándar de prevención de accidentes.

Varning! Denna varningssymbol signalerar fara. Du befinner dig i en situation som kan leda till personskada. Innan du utför arbete på någon utrustning måste du vara medveten om farorna med elkretsar och känna till vanligt förfarande för att förebygga skador.

Related Documentation

- General Safety Warnings for Juniper Networks Devices on page 526
- Installation Safety Warnings for Juniper Networks Devices on page 534
- Maintenance and Operational Safety Warnings for Juniper Networks Devices on page 545
- General Electrical Safety Warnings for Juniper Networks Devices on page 552
- DC Power Electrical Safety Warnings for Juniper Networks Devices on page 556

Copyright © 2019, Juniper Networks, Inc.

General Safety Guidelines for Juniper Networks Devices

The following guidelines help ensure your safety and protect the hardware equipment from damage. The list of guidelines might not address all potentially hazardous situations in your working environment, so be alert and exercise good judgment at all times.

- Perform only the procedures explicitly described in this documentation. Make sure that only authorized service personnel perform other system services.
- Keep the area around the chassis clear and free from dust before, during, and after installation.
- Keep tools away from areas where people could trip over them while walking.
- Do not wear loose clothing or jewelry, such as rings, bracelets, or chains, that could become caught in the chassis.
- Wear safety glasses if you are working under any conditions that could be hazardous to your eyes.
- Do not perform any actions that create a potential hazard to people or make the equipment unsafe.
- Never attempt to lift an object that is too heavy for one person to handle.
- Never install or manipulate wiring during electrical storms.
- Never install electrical jacks in wet locations unless the jacks are specifically designed for wet environments.
- Operate the hardware equipment only when the chassis is properly grounded.
- Do not open or remove chassis covers or sheet metal parts unless instructions are provided in this documentation. Such an action could cause severe electrical shock.
- Do not push or force any objects through any opening in the chassis frame. Such an action could result in electrical shock or fire.
- Avoid spilling liquid onto the chassis or onto any hardware component. Such an action could cause electrical shock or damage the hardware equipment.
- Avoid touching uninsulated electrical wires or terminals that have not been disconnected from their power source. Such an action could cause electrical shock.
- Some parts of the router might become hot. The following label provides the warning of the hot surfaces on the router:

Related Documentation

- General Safety Warnings for Juniper Networks Devices on page 526

General Safety Warnings for Juniper Networks Devices

- Qualified Personnel Warning on page 526
- Restricted-Access Area Warning on page 526

Qualified Personnel Warning

WARNING: Only trained and qualified personnel should install or replace the hardware equipment.

Waarschuwing Installatie en reparaties mogen uitsluitend door getraind en bevoegd personeel uitgevoerd worden.

Varoitus Ainoastaan koulutettu ja pätevä henkilökunta saa asentaa tai vaihtaa tämän laitteen.

Attention Tout installation ou remplacement de l'appareil doit être réalisé par du personnel qualifié et compétent.

Warnung Gerät nur von geschultem, qualifiziertem Personal installieren oder auswechseln lassen.

Avvertenza Solo personale addestrato e qualificato deve essere autorizzato ad installare o sostituire questo apparecchio.

Advarsel Kun kvalifisert personell med riktig opplæring bør montere eller bytte ut dette utstyret.

Aviso Este equipamento deverá ser instalado ou substituído apenas por pessoal devidamente treinado e qualificado.

¡Atención! Estos equipos deben ser instalados y reemplazados exclusivamente por personal técnico adecuadamente preparado y capacitado.

Varning! Denna utrustning ska endast installeras och bytas ut av utbildad och kvalificerad personal.

Restricted-Access Area Warning

WARNING: The hardware equipment is intended for installation in restricted-access areas. A restricted-access area is an area to which access can be gained only by service personnel through the use of a special tool, lock and key, or other means of security, and which is controlled by the authority responsible for the location.

Waarschuwing Dit toestel is bedoeld voor installatie op plaatsen met beperkte toegang. Een plaats met beperkte toegang is een plaats waar toegang slechts door servicepersoneel verkregen kan worden door middel van een speciaal

Copyright © 2019, Juniper Networks, Inc.

instrument, een slot en sleutel, of een ander veiligheidsmiddel, en welke beheerd wordt door de overheidsinstantie die verantwoordelijk is voor de locatie.

Varoitus Tämä laite on tarkoitettu asennettavaksi paikkaan, johon pääsy on rajoitettua. Paikka, johon pääsy on rajoitettua, tarkoittaa paikkaa, johon vain huoltohenkilöstö pääsee jonkin erikoistyökalun, lukkoon sopivan avaimen tai jonkin muun turvalaitteen avulla ja joka on paikasta vastuussa olevien toimivaltaisten henkilöiden valvoma.

Attention Cet appareil est à installer dans des zones d'accès réservé. Ces dernières sont des zones auxquelles seul le personnel de service peut accéder en utilisant un outil spécial, un mécanisme de verrouillage et une clé, ou tout autre moyen de sécurité. L'accès aux zones de sécurité est sous le contrôle de l'autorité responsable de l'emplacement.

Warnung Diese Einheit ist zur Installation in Bereichen mit beschränktem Zutritt vorgesehen. Ein Bereich mit beschränktem Zutritt ist ein Bereich, zu dem nur Wartungspersonal mit einem Spezialwerkzeugs, Schloß und Schlüssel oder anderer Sicherheitsvorkehrungen Zugang hat, und der von dem für die Anlage zuständigen Gremium kontrolliert wird.

Avvertenza Questa unità deve essere installata in un'area ad accesso limitato. Un'area ad accesso limitato è un'area accessibile solo a personale di assistenza tramite un'attrezzo speciale, lucchetto, o altri dispositivi di sicurezza, ed è controllata dall'autorità responsabile della zona.

Advarsel Denne enheten er laget for installasjon i områder med begrenset adgang. Et område med begrenset adgang gir kun adgang til servicepersonale som bruker et spesielt verktøy, lås og nøkkel, eller en annen sikkerhetsanordning, og det kontrolleres av den autoriteten som er ansvarlig for området.

Aviso Esta unidade foi concebida para instalação em áreas de acesso restrito. Uma área de acesso restrito é uma área à qual apenas tem acesso o pessoal de serviço autorizado, que possua uma ferramenta, chave e fechadura especial, ou qualquer outra forma de segurança. Esta área é controlada pela autoridade responsável pelo local.

¡Atención! Esta unidad ha sido diseñada para instalarse en áreas de acceso restringido. Área de acceso restringido significa un área a la que solamente tiene acceso el personal de servicio mediante la utilización de una herramienta especial, cerradura con llave, o algún otro medio de seguridad, y que está bajo el control de la autoridad responsable del local.

Varning! Denna enhet är avsedd för installation i områden med begränsat tillträde. Ett område med begränsat tillträde får endast tillträdas av servicepersonal med ett speciellt verktyg, lås och nyckel, eller annan säkerhetsanordning, och kontrolleras av den auktoritet som ansvarar för området.

Related Documentation

- Installation Safety Warnings for Juniper Networks Devices on page 534
- Maintenance and Operational Safety Warnings for Juniper Networks Devices on page 545
- General Electrical Safety Warnings for Juniper Networks Devices on page 552
- DC Power Electrical Safety Warnings for Juniper Networks Devices on page 556

T640 Preventing Electrostatic Discharge Damage

Many T640 router hardware components are sensitive to damage from static electricity. Some components can be impaired by voltages as low as 30 V. You can easily generate potentially damaging static voltages whenever you handle plastic or foam packing material or if you move components across plastic or carpets. Observe the following guidelines to minimize the potential for electrostatic discharge (ESD) damage, which can cause intermittent or complete component failures:

- Always use an ESD wrist strap or ankle strap, and make sure that it is in direct contact with your skin.

  CAUTION: **For safety, periodically check the resistance value of the ESD strap. The measurement should be in the range of 1 to 10 Mohms.**

- When handling any component that is removed from the chassis, make sure the equipment end of your ESD strap is attached to one of the electrostatic discharge points on the chassis.
- Avoid contact between the component and your clothing. ESD voltages emitted from clothing can still damage components.
- When removing or installing a component, always place it component-side up on an antistatic surface, in an antistatic card rack, or in an electrostatic bag (see Figure 251 on page 528). If you are returning a component, place it in an electrostatic bag before packing it.

Figure 251: Placing a Component into an Electrostatic Bag

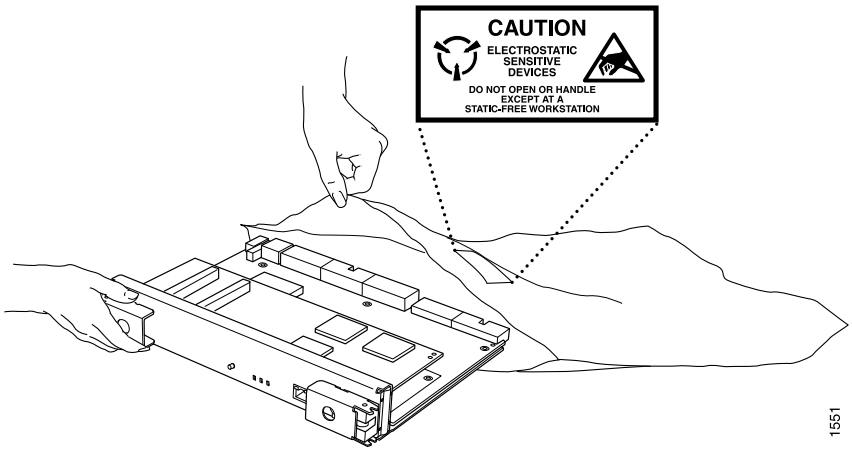

Copyright © 2019, Juniper Networks, Inc.

Figure 252: ESD Point on the Front of T640 Chassis

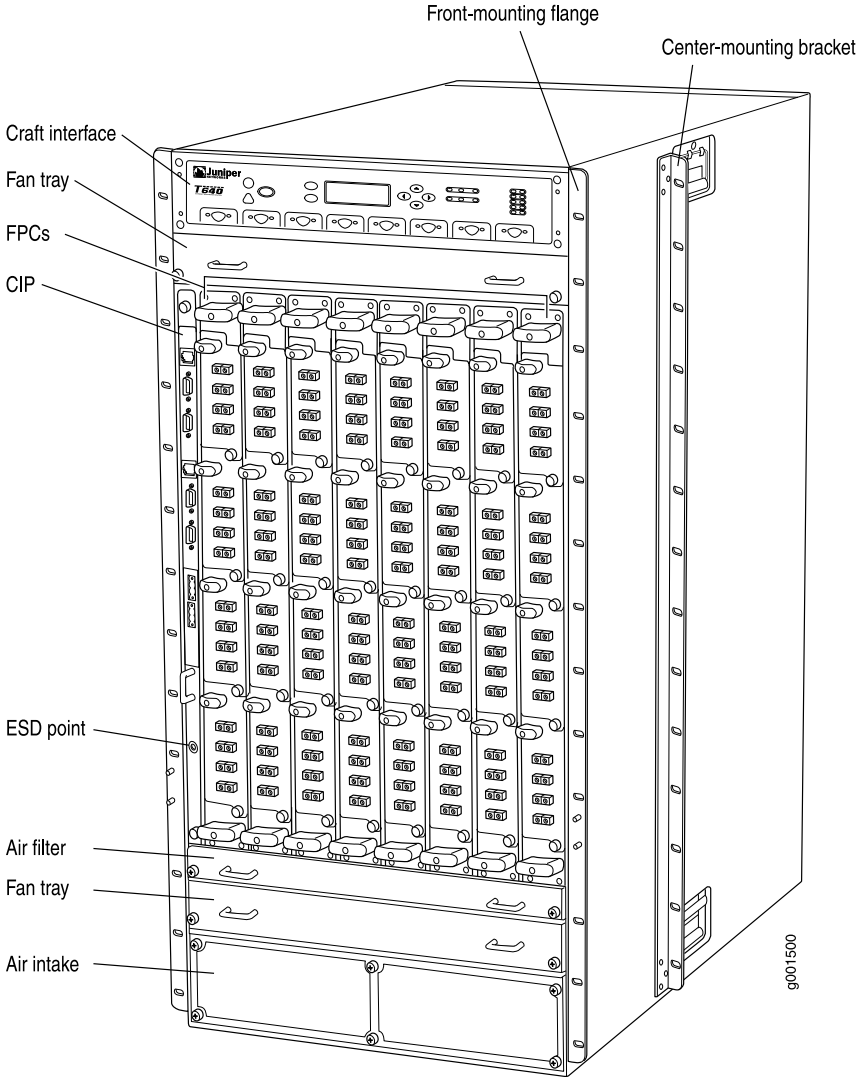

Figure 253: ESD Point on the Rear View of T640 Chassis

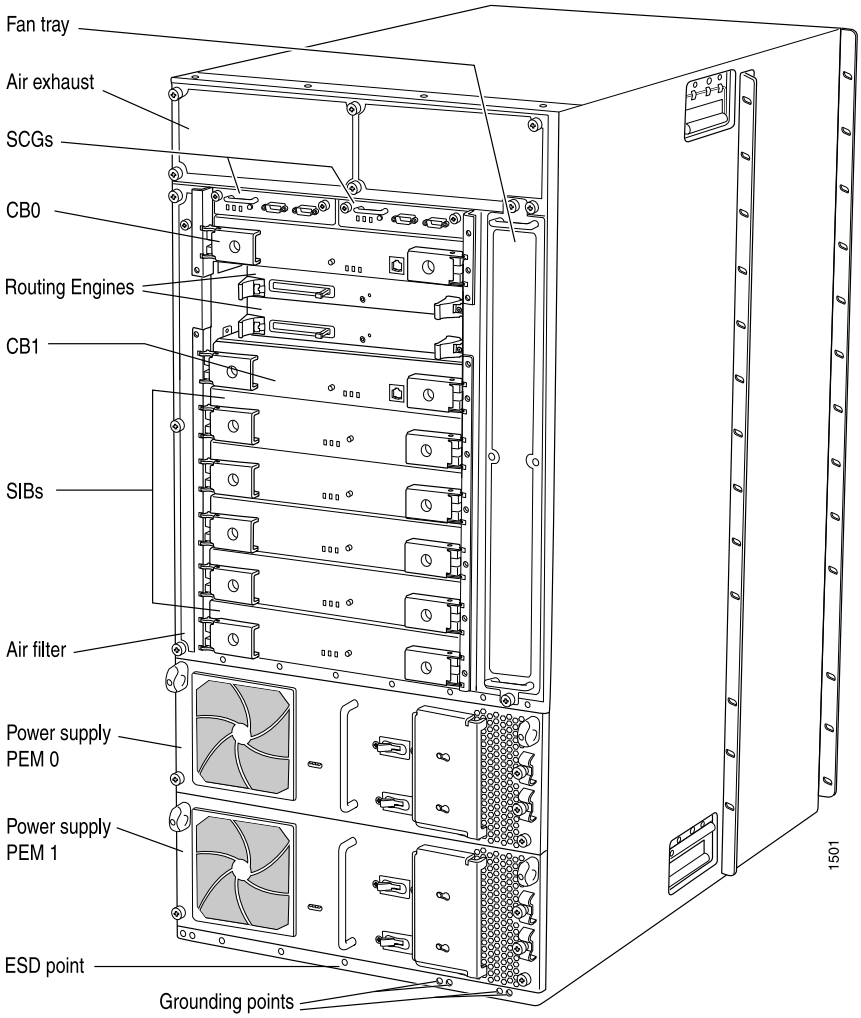

Related Documentation

- T640 Router Description on page 3
- Site Electrical Wiring Guidelines for Juniper Networks Devices on page 560
- T640 General Electrical Safety Guidelines and Electrical Codes on page 551

Copyright © 2019, Juniper Networks, Inc.

CHAPTER 38

Fire Safety Requirements

- Fire Safety Requirements for Juniper Networks Devices on page 531

Fire Safety Requirements for Juniper Networks Devices

- General Fire Safety Requirements on page 531
- Fire Suppression on page 531
- Fire Suppression Equipment on page 531

General Fire Safety Requirements

In the event of a fire emergency involving network devices, the safety of people is the primary concern. Establish procedures for protecting people in a fire emergency, provide safety training, and properly provision fire-control equipment and fire extinguishers.

In addition, establish procedures to protect your equipment in a fire emergency. Juniper Networks products must be installed in an environment suitable for electronic equipment. We recommend that fire suppression equipment be available in the event of a fire in the vicinity of the equipment, and that you observe all local fire, safety, and electrical codes and ordinances when installing and operating your equipment.

Fire Suppression

In the event of an electrical hazard or an electrical fire, first turn off power to the equipment at the source. Then use a Type C fire extinguisher, which uses noncorrosive fire retardants, to extinguish the fire.

Fire Suppression Equipment

Type C fire extinguishers, which use noncorrosive fire retardants such as carbon dioxide (CO_2) and Halotron, are most effective for suppressing electrical fires. Type C fire extinguishers displace the oxygen from the point of combustion to eliminate the fire. For extinguishing fire on or around equipment that draws air from the environment for cooling, use this type of inert oxygen displacement extinguisher instead of an extinguisher that leave residues on equipment.

Do not use multipurpose Type ABC chemical fire extinguishers (dry chemical fire extinguishers) near Juniper Networks devices. The primary ingredient in these fire extinguishers is monoammonium phosphate, which is very sticky and difficult to clean.

Copyright © 2019, Juniper Networks, Inc.

In addition, in minute amounts of moisture, monoammonium phosphate can become highly corrosive and corrodes most metals.

Any equipment in a room in which a chemical fire extinguisher has been discharged is subject to premature failure and unreliable operation. The equipment is considered to be irreparably damaged.

NOTE: **To keep warranties effective, do not use a dry chemical fire extinguisher to control a fire at or near a Juniper Networks device. If a dry chemical fire extinguisher is used, the unit is no longer eligible for coverage under a service agreement.**

We recommend that you dispose of any irreparably damaged equipment in an environmentally responsible manner.

Related Documentation

- General Safety Guidelines for Juniper Networks Devices on page 525
- General Safety Warnings for Juniper Networks Devices on page 526
- General Electrical Safety Warnings for Juniper Networks Devices on page 552
- DC Power Electrical Safety Warnings for Juniper Networks Devices on page 556

Copyright © 2019, Juniper Networks, Inc.

CHAPTER 39

Installation Safety Guidelines and Warnings

- T640 Installation Safety Guidelines on page 533
- Installation Safety Warnings for Juniper Networks Devices on page 534

T640 Installation Safety Guidelines

- General Installation Safety Guidelines on page 533
- T640 Chassis Lifting Guidelines on page 533

General Installation Safety Guidelines

Before installing the router, verify that the intended site meets the specified power, environmental, and clearance requirements. See the following documentation:

- T640 Clearance Requirements for Airflow and Hardware Maintenance on page 130
- T640 Rack Requirements on page 128
- T640 Environmental Specifications on page 130
- T640 AC Power Requirements on page 145
- T640 DC Power System Requirements on page 136

T640 Chassis Lifting Guidelines

- Before moving the router, follow the guidelines in the site preparation checklist to verify that the intended site meets the specified power, environmental, and clearance requirements.
- Do not attempt to lift a fully configured router by yourself. Using a mechanical lift to maneuver the router into a rack is recommended. If a lift cannot be used, a minimum of four people are required to lift the router, and you must remove components from the chassis before lifting.
- Before lifting or moving the router, disconnect all external cables.
- As when lifting any heavy object, lift most of the weight with your legs rather than your back. Keep your knees bent and your back relatively straight and avoid twisting your body as you lift. Balance the load evenly and be sure that your footing is solid.

Copyright © 2019, Juniper Networks, Inc.

Related Documentation

- T640 Site Preparation Checklist on page 125

Installation Safety Warnings for Juniper Networks Devices

Observe the following warnings before and during hardware equipment installation:

- Intrabuilding Ports Warning on page 534
- Installation Instructions Warning on page 534
- Rack-Mounting Requirements and Warnings on page 535
- Ramp Warning on page 538

Intrabuilding Ports Warning

WARNING: The intrabuilding ports of the equipment or subassembly are suitable for connection to intrabuilding or unexposed wiring or cabling only. The intrabuilding ports of the equipment or subassembly MUST NOT be metallically connected to interfaces that connect to the Outside Plant (OSP) or its wiring. These interfaces are designed for use as intrabuilding interfaces only (Type 2 or Type 4 ports as described in GR-1089) and require isolation from the exposed OSP cabling. The addition of Primary Protectors is not sufficient protection in order to connect these interfaces metallically to OSP wiring.

Installation Instructions Warning

WARNING: Read the installation instructions before you connect the hardware equipment to a power source.

Waarschuwing Raadpleeg de installatie-aanwijzingen voordat u het systeem met de voeding verbindt.

Varoitus Lue asennusohjeet ennen järjestelmän yhdistämistä virtalähteeseen.

Attention Avant de brancher le système sur la source d'alimentation, consulter les directives d'installation.

Warnung Lesen Sie die Installationsanweisungen, bevor Sie das System an die Stromquelle anschließen.

Avvertenza Consultare le istruzioni di installazione prima di collegare il sistema all'alimentatore.

Advarsel Les installasjonsinstruksjonene før systemet kobles til strømkilden.

Aviso Leia as instruções de instalação antes de ligar o sistema à sua fonte de energia.

Copyright © 2019, Juniper Networks, Inc.

¡Atención! Ver las instrucciones de instalación antes de conectar el sistema a la red de alimentación.

Varning! Läs installationsanvisningarna innan du kopplar systemet till dess strömförsörjningsenhet.

Rack-Mounting Requirements and Warnings

Ensure that the equipment rack into which the chassis is installed is evenly and securely supported, to avoid the hazardous condition that could result from uneven mechanical loading.

WARNING: To prevent bodily injury when mounting or servicing the chassis in a rack, take the following precautions to ensure that the system remains stable. The following directives help maintain your safety:

- The chassis must be installed into a rack that is secured to the building structure.
- The chassis should be mounted at the bottom of the rack if it is the only unit in the rack.
- When mounting the chassis in a partially-filled rack, load the rack from the bottom to the top, with the heaviest component at the bottom of the rack.
- If the rack is provided with stabilizing devices, install the stabilizers before mounting the chassis in the rack or servicing the hardware equipment.

Waarschuwing Om lichamelijk letsel te voorkomen wanneer u dit toestel in een rek monteert of het daar een servicebeurt geeft, moet u speciale voorzorgsmaatregelen nemen om ervoor te zorgen dat het toestel stabiel blijft. De onderstaande richtlijnen worden verstrekt om uw veiligheid te verzekeren:

- De router moet in een stellage worden geïnstalleerd die aan een bouwsel is verankerd.
- Dit toestel dient onderaan in het rek gemonteerd te worden als het toestel het enige in het rek is.
- Wanneer u dit toestel in een gedeeltelijk gevuld rek monteert, dient u het rek van onderen naar boven te laden met het zwaarste onderdeel onderaan in het rek.
- Als het rek voorzien is van stabiliseringshulpmiddelen, dient u de stabilisatoren te monteren voordat u het toestel in het rek monteert of het daar een servicebeurt geeft.

Varoitus Kun laite asetetaan telineeseen tai huolletaan sen ollessa telineessä, on noudatettava erityisiä varotoimia järjestelmän vakavuuden säilyttämiseksi, jotta vältytään loukkaantumiselta. Noudata seuraavia turvallisuusohjeita:

- Router on asennettava telineeseen, joka on kiinnitetty rakennukseen.
- Jos telineessä ei ole muita laitteita, aseta laite telineen alaosaan.
- Jos laite asetetaan osaksi täytettyyn telineeseen, aloita kuormittaminen sen alaosasta kaikkein raskaimmalla esineellä ja siirry sitten sen yläosaan.
- Jos telinettä varten on vakaimet, asenna ne ennen laitteen asettamista telineeseen tai sen huoltamista siinä.

Attention Pour éviter toute blessure corporelle pendant les opérations de montage ou de réparation de cette unité en casier, il convient de prendre des précautions spéciales afin de maintenir la stabilité du système. Les directives ci-dessous sont destinées à assurer la protection du personnel:

- Le rack sur lequel est monté le router doit être fixé à la structure du bâtiment.
- Si cette unité constitue la seule unité montée en casier, elle doit être placée dans le bas.
- Si cette unité est montée dans un casier partiellement rempli, charger le casier de bas en haut en plaçant l'élément le plus lourd dans le bas.
- Si le casier est équipé de dispositifs stabilisateurs, installer les stabilisateurs avant de monter ou de réparer l'unité en casier.

Warnung Zur Vermeidung von Körperverletzung beim Anbringen oder Warten dieser Einheit in einem Gestell müssen Sie besondere Vorkehrungen treffen, um sicherzustellen, daß das System stabil bleibt. Die folgenden Richtlinien sollen zur Gewährleistung Ihrer Sicherheit dienen:

- Der router muß in einem Gestell installiert werden, das in der Gebäudestruktur verankert ist.
- Wenn diese Einheit die einzige im Gestell ist, sollte sie unten im Gestell angebracht werden.
- Bei Anbringung dieser Einheit in einem zum Teil gefüllten Gestell ist das Gestell von unten nach oben zu laden, wobei das schwerste Bauteil unten im Gestell anzubringen ist.
- Wird das Gestell mit Stabilisierungszubehör geliefert, sind zuerst die Stabilisatoren zu installieren, bevor Sie die Einheit im Gestell anbringen oder sie warten.

Avvertenza Per evitare infortuni fisici durante il montaggio o la manutenzione di questa unità in un supporto, occorre osservare speciali precauzioni per garantire che il sistema rimanga stabile. Le seguenti direttive vengono fornite per garantire la sicurezza personale:

Copyright © 2019, Juniper Networks, Inc.

- Il router deve essere installato in un telaio, il quale deve essere fissato alla struttura dell'edificio.
- Questa unità deve venire montata sul fondo del supporto, se si tratta dell'unica unità da montare nel supporto.
- Quando questa unità viene montata in un supporto parzialmente pieno, caricare il supporto dal basso all'alto, con il componente più pesante sistemato sul fondo del supporto.
- Se il supporto è dotato di dispositivi stabilizzanti, installare tali dispositivi prima di montare o di procedere alla manutenzione dell'unità nel supporto.

Advarsel Unngå fysiske skader under montering eller reparasjonsarbeid på denne enheten når den befinner seg i et kabinett. Vær nøye med at systemet er stabilt. Følgende retningslinjer er gitt for å verne om sikkerheten:

- Router må installeres i et stativ som er forankret til bygningsstrukturen.
- Denne enheten bør monteres nederst i kabinettet hvis dette er den eneste enheten i kabinettet.
- Ved montering av denne enheten i et kabinett som er delvis fylt, skal kabinettet lastes fra bunnen og opp med den tyngste komponenten nederst i kabinettet.
- Hvis kabinettet er utstyrt med stabiliseringsutstyr, skal stabilisatorene installeres før montering eller utføring av reparasjonsarbeid på enheten i kabinettet.

Aviso Para se prevenir contra danos corporais ao montar ou reparar esta unidade numa estante, deverá tomar precauções especiais para se certificar de que o sistema possui um suporte estável. As seguintes directrizes ajudá-lo-ão a efectuar o seu trabalho com segurança:

- O router deverá ser instalado numa prateleira fixa à estrutura do edificio.
- Esta unidade deverá ser montada na parte inferior da estante, caso seja esta a única unidade a ser montada.
- Ao montar esta unidade numa estante parcialmente ocupada, coloque os itens mais pesados na parte inferior da estante, arrumando-os de baixo para cima.
- Se a estante possuir um dispositivo de estabilização, instale-o antes de montar ou reparar a unidade.

¡Atención! Para evitar lesiones durante el montaje de este equipo sobre un bastidor, o posteriormente durante su mantenimiento, se debe poner mucho cuidado en que el sistema quede bien estable. Para garantizar su seguridad, proceda según las siguientes instrucciones:

- El router debe instalarse en un bastidor fijado a la estructura del edificio.
- Colocar el equipo en la parte inferior del bastidor, cuando sea la única unidad en el mismo.
- Cuando este equipo se vaya a instalar en un bastidor parcialmente ocupado, comenzar la instalación desde la parte inferior hacia la superior colocando el equipo más pesado en la parte inferior.
- Si el bastidor dispone de dispositivos estabilizadores, instalar éstos antes de montar o proceder al mantenimiento del equipo instalado en el bastidor.

Varning! För att undvika kroppsskada när du installerar eller utför underhållsarbete på denna enhet på en ställning måste du vidta särskilda försiktighetsåtgärder för att försäkra dig om att systemet står stadigt. Följande riktlinjer ges för att trygga din säkerhet:

- Router måste installeras i en ställning som är förankrad i byggnadens struktur.
- Om denna enhet är den enda enheten på ställningen skall den installeras längst ned på ställningen.
- Om denna enhet installeras på en delvis fylld ställning skall ställningen fyllas nedifrån och upp, med de tyngsta enheterna längst ned på ställningen.
- Om ställningen är försedd med stabiliseringsdon skall dessa monteras fast innan enheten installeras eller underhålls på ställningen.

Ramp Warning

WARNING: When installing the hardware equipment, do not use a ramp inclined at more than 10 degrees.

Waarschuwing Gebruik een oprijplaat niet onder een hoek van meer dan 10 graden.

Varoitus Älä käytä sellaista kaltevaa pintaa, jonka kaltevuus ylittää 10 astetta.

Attention Ne pas utiliser une rampe dont l'inclinaison est supérieure à 10 degrés.

Warnung Keine Rampen mit einer Neigung von mehr als 10 Grad verwenden.

Avvertenza Non usare una rampa con pendenza superiore a 10 gradi.

Advarsel Bruk aldri en rampe som heller mer enn 10 grader.

Aviso Não utilize uma rampa com uma inclinação superior a 10 graus.

¡Atención! No usar una rampa inclinada más de 10 grados

Copyright © 2019, Juniper Networks, Inc.

Varning! Använd inte ramp med en lutning på mer än 10 grader.

Related Documentation

- General Safety Guidelines for Juniper Networks Devices on page 525
- General Safety Warnings for Juniper Networks Devices on page 526
- Maintenance and Operational Safety Warnings for Juniper Networks Devices on page 545

Copyright © 2019, Juniper Networks, Inc.

CHAPTER 40

Laser and LED Safety Guidelines and Warnings

- T640 General Laser Safety Guidelines on page 541
- Laser Safety Warnings for Juniper Networks Devices on page 541

T640 General Laser Safety Guidelines

Devices with single-mode optical interfaces are equipped with laser transmitters, which are considered Class 1 Laser product by the U.S. Food and Drug Administration, and are evaluated as a Class 1 Laser Product according to EN 60825–1 +A11 +A2 requirements.

When working around devices with optical interfaces, observe the following safety guidelines to prevent eye injury:

- Do not look into unterminated ports or at fibers that connect to unknown sources.
- Do not examine unterminated optical ports with optical instruments.
- Avoid direct exposure to the beam.

WARNING: **Unterminated optical connectors can emit invisible laser radiation. The lens in the human eye focuses all the laser power on the retina, so focusing the eye directly on a laser source—even a low-power laser—could permanently damage the eye.**

Related Documentation

- Replacing a T640 PIC on page 352
- Replacing T640 PIC Cables on page 358
- Replacing a T640 FPC on page 345

Laser Safety Warnings for Juniper Networks Devices

- Class 1 Laser Product Warning on page 542
- Class 1 LED Product Warning on page 542

- Laser Beam Warning on page 543
- Radiation from Open Port Apertures Warning on page 543

Class 1 Laser Product Warning

WARNING: Class 1 laser product.

Waarschuwing Klasse-1 laser produkt.

Varoitus Luokan 1 lasertuote.

Attention Produit laser de classe I.

Warnung Laserprodukt der Klasse 1.

Avvertenza Prodotto laser di Classe 1.

Advarsel Laserprodukt av klasse 1.

Aviso Produto laser de classe 1.

¡Atención! Producto láser Clase I.

Varning! Laserprodukt av klass 1.

Class 1 LED Product Warning

WARNING: Class 1 LED product.

Waarschuwing Klasse 1 LED-product.

Varoitus Luokan 1 valodiodituote.

Attention Alarme de produit LED Class I.

Warnung Class 1 LED-Produktwarnung.

Avvertenza Avvertenza prodotto LED di Classe 1.

Advarsel LED-produkt i klasse 1.

Aviso Produto de classe 1 com LED.

¡Atención! Aviso sobre producto LED de Clase 1.

Varning! Lysdiodprodukt av klass 1.

Copyright © 2019, Juniper Networks, Inc.

Laser Beam Warning

WARNING: Do not stare into the laser beam or view it directly with optical instruments.

Waarschuwing Niet in de straal staren of hem rechtstreeks bekijken met optische instrumenten.

Varoitus Älä katso säteeseen äläkä tarkastele sitä suoraan optisen laitteen avulla.

Attention Ne pas fixer le faisceau des yeux, ni l'observer directement à l'aide d'instruments optiques.

Warnung Nicht direkt in den Strahl blicken und ihn nicht direkt mit optischen Geräten prüfen.

Avvertenza Non fissare il raggio con gli occhi né usare strumenti ottici per osservarlo direttamente.

Advarsel Stirr eller se ikke direkte p strlen med optiske instrumenter.

Aviso Não olhe fixamente para o raio, nem olhe para ele directamente com instrumentos ópticos.

¡Atención! No mirar fijamente el haz ni observarlo directamente con instrumentos ópticos.

Varning! Rikta inte blicken in mot strålen och titta inte direkt på den genom optiska instrument.

Radiation from Open Port Apertures Warning

WARNING: Because invisible radiation might be emitted from the aperture of the port when no fiber-optic cable is connected, avoid exposure to radiation and do not stare into open apertures.

Waarschuwing Aangezien onzichtbare straling vanuit de opening van de poort kan komen als er geen fiberkabel aangesloten is, dient blootstelling aan straling en het kijken in open openingen vermeden te worden.

Varoitus Koska portin aukosta voi emittoitua näkymätöntä säteilyä, kun kuitukaapelia ei ole kytkettynä, vältä säteilylle altistumista äläkä katso avoimiin aukkoihin.

Attention Des radiations invisibles à l'il nu pouvant traverser l'ouverture du port lorsqu'aucun câble en fibre optique n'y est connecté, il est recommandé de ne pas regarder fixement l'intérieur de ces ouvertures.

Copyright © 2019, Juniper Networks, Inc.

Warnung Aus der Port-Öffnung können unsichtbare Strahlen emittieren, wenn kein Glasfaserkabel angeschlossen ist. Vermeiden Sie es, sich den Strahlungen auszusetzen, und starren Sie nicht in die Öffnungen!

Avvertenza Quando i cavi in fibra non sono inseriti, radiazioni invisibili possono essere emesse attraverso l'apertura della porta. Evitate di esporvi alle radiazioni e non guardate direttamente nelle aperture.

Advarsel Unngå utsettelse for stråling, og stirr ikke inn i åpninger som er åpne, fordi usynlig stråling kan emiteres fra portens åpning når det ikke er tilkoblet en fiberkabel.

Aviso Dada a possibilidade de emissão de radiação invisível através do orifício da via de acesso, quando esta não tiver nenhum cabo de fibra conectado, deverá evitar a exposição à radiação e não deverá olhar fixamente para orifícios que se encontrarem a descoberto.

¡Atención! Debido a que la apertura del puerto puede emitir radiación invisible cuando no existe un cable de fibra conectado, evite mirar directamente a las aperturas para no exponerse a la radiación.

Varning! Osynlig strålning kan avges från en portöppning utan ansluten fiberkabel och du bör därför undvika att bli utsatt för strålning genom att inte stirra in i oskyddade öppningar.

Related Documentation

- General Safety Guidelines for Juniper Networks Devices on page 525
- General Safety Warnings for Juniper Networks Devices on page 526
- Installation Safety Warnings for Juniper Networks Devices on page 534

Copyright © 2019, Juniper Networks, Inc.

CHAPTER 41

Maintenance and Operational Safety Guidelines and Warnings

- Maintenance and Operational Safety Warnings for Juniper Networks Devices on page 545

Maintenance and Operational Safety Warnings for Juniper Networks Devices

As you maintain the hardware equipment, observe the following warnings:

- Battery Handling Warning on page 545
- Jewelry Removal Warning on page 546
- Lightning Activity Warning on page 547
- Operating Temperature Warning on page 548
- Product Disposal Warning on page 549

Battery Handling Warning

WARNING: Replacing the battery incorrectly might result in an explosion. Replace the battery only with the same or equivalent type recommended by the manufacturer. Dispose of used batteries according to the manufacturer's instructions.

Waarschuwing Er is ontploffingsgevaar als de batterij verkeerd vervangen wordt. Vervang de batterij slechts met hetzelfde of een equivalent type dat door de fabrikant aanbevolen is. Gebruikte batterijen dienen overeenkomstig fabrieksvoorschriften weggeworpen te worden.

Varoitus Räjähdyksen vaara, jos akku on vaihdettu väärään akkuun. Käytä vaihtamiseen ainoastaan saman- tai vastaavantyyppistä akkua, joka on valmistajan suosittelema. Hävitä käytetyt akut valmistajan ohjeiden mukaan.

Attention Danger d'explosion si la pile n'est pas remplacée correctement. Ne la remplacer que par une pile de type semblable ou équivalent, recommandée par le fabricant. Jeter les piles usagées conformément aux instructions du fabricant.

Copyright © 2019, Juniper Networks, Inc.

Warnung Bei Einsetzen einer falschen Batterie besteht Explosionsgefahr. Ersetzen Sie die Batterie nur durch den gleichen oder vom Hersteller empfohlenen Batterietyp. Entsorgen Sie die benutzten Batterien nach den Anweisungen des Herstellers.

Avvertenza Pericolo di esplosione se la batteria non è installata correttamente. Sostituire solo con una di tipo uguale o equivalente, consigliata dal produttore. Eliminare le batterie usate secondo le istruzioni del produttore.

Advarsel Det kan være fare for eksplosjon hvis batteriet skiftes på feil måte. Skift kun med samme eller tilsvarende type som er anbefalt av produsenten. Kasser brukte batterier i henhold til produsentens instruksjoner.

Aviso Existe perigo de explosão se a bateria for substituída incorrectamente. Substitua a bateria por uma bateria igual ou de um tipo equivalente recomendado pelo fabricante. Destrua as baterias usadas conforme as instruções do fabricante.

¡Atención! Existe peligro de explosión si la batería se reemplaza de manera incorrecta. Reemplazar la batería exclusivamente con el mismo tipo o el equivalente recomendado por el fabricante. Desechar las baterías gastadas según las instrucciones del fabricante.

Varning! Explosionsfara vid felaktigt batteribyte. Ersätt endast batteriet med samma batterityp som rekommenderas av tillverkaren eller motsvarande. Följ tillverkarens anvisningar vid kassering av använda batterier.

Jewelry Removal Warning

WARNING: Before working on equipment that is connected to power lines, remove jewelry, including rings, necklaces, and watches. Metal objects heat up when connected to power and ground and can cause serious burns or weld the metal object to the terminals.

Waarschuwing Alvorens aan apparatuur te werken die met elektrische leidingen is verbonden, sieraden (inclusief ringen, kettingen en horloges) verwijderen. Metalen voorwerpen worden warm wanneer ze met stroom en aarde zijn verbonden, en kunnen ernstige brandwonden veroorzaken of het metalen voorwerp aan de aansluitklemmen lassen.

Varoitus Ennen kuin työskentelet voimavirtajohtoihin kytkettyjen laitteiden parissa, ota pois kaikki korut (sormukset, kaulakorut ja kellot mukaan lukien). Metalliesineet kuumenevat, kun ne ovat yhteydessä sähkövirran ja maan kanssa, ja ne voivat aiheuttaa vakavia palovammoja tai hitsata metalliesineet kiinni liitäntänapoihin.

Attention Avant d'accéder à cet équipement connecté aux lignes électriques, ôter tout bijou (anneaux, colliers et montres compris). Lorsqu'ils sont branchés

Copyright © 2019, Juniper Networks, Inc.

à l'alimentation et reliés à la terre, les objets métalliques chauffent, ce qui peut provoquer des blessures graves ou souder l'objet métallique aux bornes.

Warnung Vor der Arbeit an Geräten, die an das Netz angeschlossen sind, jeglichen Schmuck (einschließlich Ringe, Ketten und Uhren) abnehmen. Metallgegenstände erhitzen sich, wenn sie an das Netz und die Erde angeschlossen werden, und können schwere Verbrennungen verursachen oder an die Anschlußklemmen angeschweißt werden.

Avvertenza Prima di intervenire su apparecchiature collegate alle linee di alimentazione, togliersi qualsiasi monile (inclusi anelli, collane, braccialetti ed orologi). Gli oggetti metallici si riscaldano quando sono collegati tra punti di alimentazione e massa: possono causare ustioni gravi oppure il metallo può saldarsi ai terminali.

Advarsel Fjern alle smykker (inkludert ringer, halskjeder og klokker) før du skal arbeide på utstyr som er koblet til kraftledninger. Metallgjenstander som er koblet til kraftledninger og jord blir svært varme og kan forårsake alvorlige brannskader eller smelte fast til polene.

Aviso Antes de trabalhar em equipamento que esteja ligado a linhas de corrente, retire todas as jóias que estiver a usar (incluindo anéis, fios e relógios). Os objectos metálicos aquecerão em contacto com a corrente e em contacto com a ligação à terra, podendo causar queimaduras graves ou ficarem soldados aos terminais.

¡Atención! Antes de operar sobre equipos conectados a líneas de alimentación, quitarse las joyas (incluidos anillos, collares y relojes). Los objetos de metal se calientan cuando se conectan a la alimentación y a tierra, lo que puede ocasionar quemaduras graves o que los objetos metálicos queden soldados a los bornes.

Varning! Tag av alla smycken (inklusive ringar, halsband och armbandsur) innan du arbetar på utrustning som är kopplad till kraftledningar. Metallobjekt hettas upp när de kopplas ihop med ström och jord och kan förorsaka allvarliga brännskador; metallobjekt kan också sammansvetsas med kontakterna.

Lightning Activity Warning

WARNING: Do not work on the system or connect or disconnect cables during periods of lightning activity.

Waarschuwing Tijdens onweer dat gepaard gaat met bliksem, dient u niet aan het systeem te werken of kabels aan te sluiten of te ontkoppelen.

Varoitus Älä työskentele järjestelmän parissa äläkä yhdistä tai irrota kaapeleita ukkosilmalla.

Attention Ne pas travailler sur le système ni brancher ou débrancher les câbles pendant un orage.

Warnung Arbeiten Sie nicht am System und schließen Sie keine Kabel an bzw. trennen Sie keine ab, wenn es gewittert.

Avvertenza Non lavorare sul sistema o collegare oppure scollegare i cavi durante un temporale con fulmini.

Advarsel Utfør aldri arbeid på systemet, eller koble kabler til eller fra systemet når det tordner eller lyner.

Aviso Não trabalhe no sistema ou ligue e desligue cabos durante períodos de mau tempo (trovoada).

¡Atención! No operar el sistema ni conectar o desconectar cables durante el transcurso de descargas eléctricas en la atmósfera.

Varning! Vid åska skall du aldrig utföra arbete på systemet eller ansluta eller koppla loss kablar.

Operating Temperature Warning

WARNING: To prevent the hardware equipment from overheating, do not operate it in an area that exceeds the maximum recommended ambient temperature of 104° F (40° C). To prevent airflow restriction, allow at least 6 inches (15.2 cm) of clearance around the ventilation openings.

Waarschuwing Om te voorkomen dat welke router van de router dan ook oververhit raakt, dient u deze niet te bedienen op een plaats waar de maximale aanbevolen omgevingstemperatuur van 40° C wordt overschreden. Om te voorkomen dat de luchtstroom wordt beperkt, dient er minstens 15,2 cm speling rond de ventilatie-openingen te zijn.

Varoitus Ettei router-sarjan reititin ylikuumentuisi, sitä ei saa käyttää tilassa, jonka lämpötila ylittää korkeimman suositellun ympäristölämpötilan 40° C. Ettei ilmanvaihto estyisi, tuuletusaukkojen ympärille on jätettävä ainakin 15,2 cm tilaa.

Attention Pour éviter toute surchauffe des routeurs de la gamme router, ne l'utilisez pas dans une zone où la température ambiante est supérieure à 40° C. Pour permettre un flot d'air constant, dégagez un espace d'au moins 15,2 cm autour des ouvertures de ventilations.

Warnung Um einen router der router vor Überhitzung zu schützen, darf dieser nicht in einer Gegend betrieben werden, in der die Umgebungstemperatur das empfohlene Maximum von 40° C überschreitet. Um Lüftungsverschluß zu verhindern, achten Sie darauf, daß mindestens 15,2 cm lichter Raum um die Lüftungsöffnungen herum frei bleibt.

Copyright © 2019, Juniper Networks, Inc.

Avvertenza Per evitare il surriscaldamento dei router, non adoperateli in un locale che ecceda la temperatura ambientale massima di 40° C. Per evitare che la circolazione dell'aria sia impedita, lasciate uno spazio di almeno 15.2 cm di fronte alle aperture delle ventole.

Advarsel Unngå overoppheting av eventuelle rutere i router Disse skal ikke brukes på steder der den anbefalte maksimale omgivelsestemperaturen overstiger 40° C (104° F). Sørg for at klaringen rundt lufteåpningene er minst 15,2 cm (6 tommer) for å forhindre nedsatt luftsirkulasjon.

Aviso Para evitar o sobreaquecimento do encaminhador router, não utilize este equipamento numa área que exceda a temperatura máxima recomendada de 40° C. Para evitar a restrição à circulação de ar, deixe pelo menos um espaço de 15,2 cm à volta das aberturas de ventilação.

¡Atención! Para impedir que un encaminador de la serie router se recaliente, no lo haga funcionar en un área en la que se supere la temperatura ambiente máxima recomendada de 40° C. Para impedir la restricción de la entrada de aire, deje un espacio mínimo de 15,2 cm alrededor de las aperturas para ventilación.

Varning! Förhindra att en router överhettas genom att inte använda den i ett område där den maximalt rekommenderade omgivningstemperaturen på 40° C överskrids. Förhindra att luftcirkulationen inskränks genom att se till att det finns fritt utrymme på minst 15,2 cm omkring ventilationsöppningarna.

Product Disposal Warning

WARNING: Disposal of this product must be handled according to all national laws and regulations.

Waarschuwing Dit produkt dient volgens alle landelijke wetten en voorschriften te worden afgedankt.

Varoitus Tämän tuotteen lopullisesta hävittämisestä tulee huolehtia kaikkia valtakunnallisia lakeja ja säännöksiä noudattaen.

Attention La mise au rebut définitive de ce produit doit être effectuée conformément à toutes les lois et réglementations en vigueur.

Warnung Dieses Produkt muß den geltenden Gesetzen und Vorschriften entsprechend entsorgt werden.

Avvertenza L'eliminazione finale di questo prodotto deve essere eseguita osservando le normative italiane vigenti in materia

Advarsel Endelig disponering av dette produktet må skje i henhold til nasjonale lover og forskrifter.

Copyright © 2019, Juniper Networks, Inc.

Aviso A descartagem final deste produto deverá ser efectuada de acordo com os regulamentos e a legislação nacional.

¡Atención! El desecho final de este producto debe realizarse según todas las leyes y regulaciones nacionales

Varning! Slutlig kassering av denna produkt bör skötas i enlighet med landets alla lagar och föreskrifter.

Related Documentation

- General Safety Guidelines for Juniper Networks Devices on page 525
- General Safety Warnings for Juniper Networks Devices on page 526

Copyright © 2019, Juniper Networks, Inc.

CHAPTER 42

Electrical Safety Guidelines and Warnings

- In Case of an Electrical Accident on page 551
- T640 General Electrical Safety Guidelines and Electrical Codes on page 551
- General Electrical Safety Warnings for Juniper Networks Devices on page 552
- DC Power Electrical Safety Warnings for Juniper Networks Devices on page 556
- T640 AC Power Electrical Safety Guidelines on page 559
- Site Electrical Wiring Guidelines for Juniper Networks Devices on page 560

In Case of an Electrical Accident

If an electrical accident results in an injury, take the following actions in this order:

1. Use caution. Be aware of potentially hazardous conditions that could cause further injury.
2. Disconnect power from the router.
3. If possible, send another person to get medical aid. Otherwise, assess the condition of the victim, then call for help.

Related Documentation

- General Safety Guidelines for Juniper Networks Devices on page 525
- General Safety Warnings for Juniper Networks Devices on page 526

T640 General Electrical Safety Guidelines and Electrical Codes

- Install the router in compliance with the following local, national, or international electrical codes:
  - United States—National Fire Protection Association (NFPA 70), United States National Electrical Code.
  - Canada—Canadian Electrical Code, Part 1, CSA C22.1.

  - Other countries—International Electromechanical Commission (IEC) 60364, Part 1 through Part 7.

- Locate the emergency power-off switch for the room in which you are working so that if an electrical accident occurs, you can quickly turn off the power.
- Do not work alone if potentially hazardous conditions exist anywhere in your workspace.
- Never assume that power is disconnected from a circuit. Always check the circuit before starting to work.
- Carefully look for possible hazards in your work area, such as moist floors, ungrounded power extension cords, and missing safety grounds.
- Operate the router within marked electrical ratings and product usage instructions.
- For the router and peripheral equipment to function safely and correctly, use the cables and connectors specified for the attached peripheral equipment, and make certain they are in good condition.

Many router components can be removed and replaced without powering off or disconnecting power to the router. Never install equipment if it appears damaged.

Related Documentation

General Electrical Safety Warnings for Juniper Networks Devices

- Grounded Equipment Warning on page 552
- Grounding Requirements and Warning on page 553
- Midplane Energy Hazard Warning on page 554
- Multiple Power Supplies Disconnection Warning on page 554
- Power Disconnection Warning on page 555

Grounded Equipment Warning

WARNING: The network device is intended to be grounded. Ensure that the network device is connected to earth ground during normal use.

Waarschuwing Deze apparatuur hoort geaard te worden Zorg dat de host-computer tijdens normaal gebruik met aarde is verbonden.

Varoitus Tämä laitteisto on tarkoitettu maadoitettavaksi. Varmista, että isäntälaite on yhdistetty maahan normaalikäytön aikana.

Attention Cet équipement doit être relié à la terre. S'assurer que l'appareil hôte est relié à la terre lors de l'utilisation normale.

Warnung Dieses Gerät muß geerdet werden. Stellen Sie sicher, daß das Host-Gerät während des normalen Betriebs an Erde gelegt ist.

Copyright © 2019, Juniper Networks, Inc.

Avvertenza Questa apparecchiatura deve essere collegata a massa. Accertarsi che il dispositivo host sia collegato alla massa di terra durante il normale utilizzo.

Advarsel Dette utstyret skal jordes. Forviss deg om vertsterminalen er jordet ved normalt bruk.

Aviso Este equipamento deverá estar ligado à terra. Certifique-se que o host se encontra ligado à terra durante a sua utilização normal.

¡Atención! Este equipo debe conectarse a tierra. Asegurarse de que el equipo principal esté conectado a tierra durante el uso normal.

Varning! Denna utrustning är avsedd att jordas. Se till att värdenheten är jordad vid normal användning.

Grounding Requirements and Warning

An insulated grounding conductor that is identical in size to the grounded and ungrounded branch circuit supply conductors, but is identifiable by green and yellow stripes, is installed as part of the branch circuit that supplies the unit. The grounding conductor is a separately derived system at the supply transformer or motor generator set.

WARNING: When installing the network device, you must always make the ground connection first and disconnect it last.

Waarschuwing Bij de installatie van het toestel moet de aardverbinding altijd het eerste worden gemaakt en het laatste worden losgemaakt.

Varoitus Laitetta asennettaessa on maahan yhdistäminen aina tehtävä ensiksi ja maadoituksen irti kytkeminen viimeiseksi.

Attention Lors de l'installation de l'appareil, la mise à la terre doit toujours être connectée en premier et déconnectée en dernier.

Warnung Der Erdanschluß muß bei der Installation der Einheit immer zuerst hergestellt und zuletzt abgetrennt werden.

Avvertenza In fase di installazione dell'unità, eseguire sempre per primo il collegamento a massa e disconnetterlo per ultimo.

Advarsel Når enheten installeres, må jordledningen alltid tilkobles først og frakobles sist.

Aviso Ao instalar a unidade, a ligação à terra deverá ser sempre a primeira a ser ligada, e a última a ser desligada.

¡Atención! Al instalar el equipo, conectar la tierra la primera y desconectarla la última.

Copyright © 2019, Juniper Networks, Inc.

Varning! Vid installation av enheten måste jordledningen alltid anslutas först och kopplas bort sist.

Midplane Energy Hazard Warning

WARNING: High levels of electrical energy are distributed across the midplane. Be careful not to contact the midplane connectors, or any component connected to the midplane, with any metallic object while servicing components.

Multiple Power Supplies Disconnection Warning

WARNING: The network device has more than one power supply connection. All connections must be removed completely to remove power from the unit completely.

Waarschuwing Deze eenheid heeft meer dan één stroomtoevoerverbinding; alle verbindingen moeten volledig worden verwijderd om de stroom van deze eenheid volledig te verwijderen.

Varoitus Tässä laitteessa on useampia virtalähdekytkentöjä. Kaikki kytkennät on irrotettava kokonaan, jotta virta poistettaisiin täysin laitteesta.

Attention Cette unité est équipée de plusieurs raccordements d'alimentation. Pour supprimer tout courant électrique de l'unité, tous les cordons d'alimentation doivent être débranchés.

Warnung Diese Einheit verfügt über mehr als einen Stromanschluß; um Strom gänzlich von der Einheit fernzuhalten, müssen alle Stromzufuhren abgetrennt sein.

Avvertenza Questa unità ha più di una connessione per alimentatore elettrico; tutte le connessioni devono essere completamente rimosse per togliere l'elettricità dall'unità.

Advarsel Denne enheten har mer enn én strømtilkobling. Alle tilkoblinger må kobles helt fra for å eliminere strøm fra enheten.

Aviso Este dispositivo possui mais do que uma conexão de fonte de alimentação de energia; para poder remover a fonte de alimentação de energia, deverão ser desconectadas todas as conexões existentes.

¡Atención! Esta unidad tiene más de una conexión de suministros de alimentación; para eliminar la alimentación por completo, deben desconectarse completamente todas las conexiones.

Copyright © 2019, Juniper Networks, Inc.

Varning! Denna enhet har mer än en strömförsörjningsanslutning; alla anslutningar måste vara helt avlägsnade innan strömtillförseln till enheten är fullständigt bruten.

Power Disconnection Warning

WARNING: Before working on the chassis or near power supplies, switch off the power at the DC circuit breaker.

Waarschuwing Voordat u aan een frame of in de nabijheid van voedingen werkt, dient u bij wisselstroom toestellen de stekker van het netsnoer uit het stopcontact te halen; voor gelijkstroom toestellen dient u de stroom uit te schakelen bij de stroomverbreker.

Varoitus Kytke irti vaihtovirtalaitteiden virtajohto ja katkaise tasavirtalaitteiden virta suojakytkimellä, ennen kuin teet mitään asennuspohjalle tai työskentelet virtalähteiden läheisyydessä.

Attention Avant de travailler sur un châssis ou à proximité d'une alimentation électrique, débrancher le cordon d'alimentation des unités en courant alternatif; couper l'alimentation des unités en courant continu au niveau du disjoncteur.

Warnung Bevor Sie an einem Chassis oder in der Nähe von Netzgeräten arbeiten, ziehen Sie bei Wechselstromeinheiten das Netzkabel ab bzw. schalten Sie bei Gleichstromeinheiten den Strom am Unterbrecher ab.

Avvertenza Prima di lavorare su un telaio o intorno ad alimentatori, scollegare il cavo di alimentazione sulle unità CA; scollegare l'alimentazione all'interruttore automatico sulle unità CC.

Advarsel Før det utføres arbeid på kabinettet eller det arbeides i nærheten av strømforsyningsenheter, skal strømledningen trekkes ut p vekselstrømsenheter og strømmen kobles fra ved strømbryteren på likestrømsenheter.

Aviso Antes de trabalhar num chassis, ou antes de trabalhar perto de unidades de fornecimento de energia, desligue o cabo de alimentação nas unidades de corrente alternada; desligue a corrente no disjuntor nas unidades de corrente contínua.

¡Atención! Antes de manipular el chasis de un equipo o trabajar cerca de una fuente de alimentación, desenchufar el cable de alimentación en los equipos de corriente alterna (CA); cortar la alimentación desde el interruptor automático en los equipos de corriente continua (CC).

Varning! Innan du arbetar med ett chassi eller nära strömförsörjningsenheter skall du för växelströmsenheter dra ur nätsladden och för likströmsenheter bryta strömmen vid överspänningsskyddet.

Related Documentation

- DC Power Electrical Safety Warnings for Juniper Networks Devices on page 556

DC Power Electrical Safety Warnings for Juniper Networks Devices

When working with DC-powered equipment, observe the following warnings:

- DC Power Copper Conductors Warning on page 556
- DC Power Disconnection Warning on page 556
- DC Power Wiring Terminations Warning on page 558

DC Power Copper Conductors Warning

WARNING: Use copper conductors only.

Waarschuwing Gebruik alleen koperen geleiders.

Varoitus Käytä vain kuparijohtimia.

Attention Utilisez uniquement des conducteurs en cuivre.

Warnung Verwenden Sie ausschließlich Kupferleiter.

Avvertenza Usate unicamente dei conduttori di rame.

Advarsel Bruk bare kobberledninger.

Aviso Utilize apenas fios condutores de cobre.

¡Atención! Emplee sólo conductores de cobre.

Varning! Använd endast ledare av koppar.

DC Power Disconnection Warning

WARNING: Before performing any procedures on power supplies, ensure that power is removed from the DC circuit. To ensure that all power is off, locate the circuit breaker on the panel board that services the DC circuit, switch the circuit breaker to the off position, and tape the switch handle of the circuit breaker in the off position.

Waarschuwing Voordat u een van de onderstaande procedures uitvoert, dient u te controleren of de stroom naar het gelijkstroom circuit uitgeschakeld is. Om u ervan te verzekeren dat alle stroom UIT is geschakeld, kiest u op het schakelbord de stroomverbreker die het gelijkstroom circuit bedient, draait de stroomverbreker naar de UIT positie en plakt de schakelaarhendel van de stroomverbreker met plakband in de UIT positie vast.

Copyright © 2019, Juniper Networks, Inc.

Varoitus Varmista, että tasavirtapiirissä ei ole virtaa ennen seuraavien toimenpiteiden suorittamista. Varmistaaksesi, että virta on KATKAISTU täysin, paikanna tasavirrasta huolehtivassa kojetaulussa sijaitseva suojakytkin, käännä suojakytkin KATKAISTU-asentoon ja teippaa suojakytkimen varsi niin, että se pysyy KATKAISTU-asennossa.

Attention Avant de pratiquer l'une quelconque des procédures ci-dessous, vérifier que le circuit en courant continu n'est plus sous tension. Pour en être sûr, localiser le disjoncteur situé sur le panneau de service du circuit en courant continu, placer le disjoncteur en position fermée (OFF) et, à l'aide d'un ruban adhésif, bloquer la poignée du disjoncteur en position OFF.

Warnung Vor Ausführung der folgenden Vorgänge ist sicherzustellen, daß die Gleichstromschaltung keinen Strom erhält. Um sicherzustellen, daß sämtlicher Strom abgestellt ist, machen Sie auf der Schalttafel den Unterbrecher für die Gleichstromschaltung ausfindig, stellen Sie den Unterbrecher auf AUS, und kleben Sie den Schaltergriff des Unterbrechers mit Klebeband in der AUS-Stellung fest.

Avvertenza Prima di svolgere una qualsiasi delle procedure seguenti, verificare che il circuito CC non sia alimentato. Per verificare che tutta l'alimentazione sia scollegata (OFF), individuare l'interruttore automatico sul quadro strumenti che alimenta il circuito CC, mettere l'interruttore in posizione OFF e fissarlo con nastro adesivo in tale posizione.

Advarsel Før noen av disse prosedyrene utføres, kontroller at strømmen er frakoblet likestrømkretsen. Sørg for at all strøm er slått AV. Dette gjøres ved å lokalisere strømbryteren på brytertavlen som betjener likestrømkretsen, slå strømbryteren AV og teipe bryterhåndtaket på strømbryteren i AV-stilling.

Aviso Antes de executar um dos seguintes procedimentos, certifique-se que desligou a fonte de alimentação de energia do circuito de corrente contínua. Para se assegurar que toda a corrente foi DESLIGADA, localize o disjuntor no painel que serve o circuito de corrente contínua e coloque-o na posição OFF (Desligado), segurando nessa posição a manivela do interruptor do disjuntor com fita isoladora.

¡Atención! Antes de proceder con los siguientes pasos, comprobar que la alimentación del circuito de corriente continua (CC) esté cortada (OFF). Para asegurarse de que toda la alimentación esté cortada (OFF), localizar el interruptor automático en el panel que alimenta al circuito de corriente continua, cambiar el interruptor automático a la posición de Apagado (OFF), y sujetar con cinta la palanca del interruptor automático en posición de Apagado (OFF).

Varning! Innan du utför någon av följande procedurer måste du kontrollera att strömförsörjningen till likströmskretsen är bruten. Kontrollera att all strömförsörjning är BRUTEN genom att slå AV det överspänningsskydd som skyddar likströmskretsen och tejpa fast överspänningsskyddets omkopplare i FRÅN-läget.

DC Power Wiring Terminations Warning

WARNING: When stranded wiring is required, use approved wiring terminations, such as closed-loop or spade-type with upturned lugs. These terminations must be the appropriate size for the wires and must clamp both the insulation and conductor.

Waarschuwing Wanneer geslagen bedrading vereist is, dient u bedrading te gebruiken die voorzien is van goedgekeurde aansluitingspunten, zoals het gesloten-lus type of het grijperschop type waarbij de aansluitpunten omhoog wijzen. Deze aansluitpunten dienen de juiste maat voor de draden te hebben en dienen zowel de isolatie als de geleider vast te klemmen.

Varoitus Jos säikeellinen johdin on tarpeen, käytä hyväksyttyä johdinliitäntää, esimerkiksi suljettua silmukkaa tai kourumaista liitäntää, jossa on ylöspäin käännetyt kiinnityskorvat. Tällaisten liitäntöjen tulee olla kooltaan johtimiin sopivia ja niiden tulee puristaa yhteen sekä eristeen että johdinosan.

Attention Quand des fils torsadés sont nécessaires, utiliser des douilles terminales homologuées telles que celles à circuit fermé ou du type à plage ouverte avec cosses rebroussées. Ces douilles terminales doivent être de la taille qui convient aux fils et doivent être refermées sur la gaine isolante et sur le conducteur.

Warnung Wenn Litzenverdrahtung erforderlich ist, sind zugelassene Verdrahtungsabschlüsse, z.B. Ringoesen oder gabelförmige Kabelschuhe mit nach oben gerichteten Enden zu verwenden. Diese Abschlüsse sollten die angemessene Größe für die Drähte haben und sowohl die Isolierung als auch den Leiter festklemmen.

Avvertenza Quando occorre usare trecce, usare connettori omologati, come quelli a occhiello o a forcella con linguette rivolte verso l'alto. I connettori devono avere la misura adatta per il cablaggio e devono serrare sia l'isolante che il conduttore.

Advarsel Hvis det er nødvendig med flertrådede ledninger, brukes godkjente ledningsavslutninger, som for eksempel lukket sløyfe eller spadetype med oppoverbøyde kabelsko. Disse avslutningene skal ha riktig størrelse i forhold til ledningene, og skal klemme sammen både isolasjonen og lederen.

Aviso Quando forem requeridas montagens de instalação eléctrica de cabo torcido, use terminações de cabo aprovadas, tais como, terminações de cabo em circuito fechado e planas com terminais de orelha voltados para cima. Estas terminações de cabo deverão ser do tamanho apropriado para os respectivos cabos, e deverão prender simultaneamente o isolamento e o fio condutor.

¡Atención! Cuando se necesite hilo trenzado, utilizar terminales para cables homologados, tales como las de tipo "bucle cerrado" o "espada", con las

Copyright © 2019, Juniper Networks, Inc.

lengüetas de conexión vueltas hacia arriba. Estos terminales deberán ser del tamaño apropiado para los cables que se utilicen, y tendrán que sujetar tanto el aislante como el conductor.

Varning! När flertrådiga ledningar krävs måste godkända ledningskontakter användas, t.ex. kabelsko av sluten eller öppen typ med uppåtvänd tapp. Storleken på dessa kontakter måste vara avpassad till ledningarna och måste kunna hålla både isoleringen och ledaren fastklämda.

Related Documentation

- General Safety Warnings for Juniper Networks Devices on page 526
- General Electrical Safety Warnings for Juniper Networks Devices on page 552

T640 AC Power Electrical Safety Guidelines

The following electrical safety guidelines apply to an AC-powered T640 or T1600 router with three-phase AC power supplies:

- AC-powered routers are shipped with three-phase electrical cords with grounding. Do not circumvent this safety feature. Equipment grounding must comply with local and national electrical codes.
- For each three-phase delta AC power supply. you must provide an external listed customer site circuit breaker rated minimum 40 A (240 VAC) in the building installation, or as required by local code.
- For each three-phase wye AC power supply. you must provide an external listed customer site circuit breaker rated minimum 25 A (415 VAC) in the building installation, or as required by local code.
- The delta cores in the mains lead are labeled as follows:
  - Wire labeled **GND**—Earth
  - Wire labeled **L1**
  - Wire labeled **L2**
  - Wire labeled **L3**
- The wye cores in the mains lead are labeled as follows:
  - Wire labeled **GND**—Earth
  - Wire labeled **L1**
  - Wire labeled **L2**
  - Wire labeled **L3**
  - Wire labeled **N**

CAUTION: For Juniper systems with AC power supplies, an external surge protective device (SPD) must be used at the AC power source.

Related Documentation

- T640 Three-Phase Delta and Wye AC Power Supply Description on page 114
- T640 General Electrical Safety Guidelines and Electrical Codes on page 551
- General Electrical Safety Warnings for Juniper Networks Devices on page 552

Site Electrical Wiring Guidelines for Juniper Networks Devices

- Distance Limitations for Signaling on page 560
- Radio Frequency Interference on page 560
- Electromagnetic Compatibility on page 560

Distance Limitations for Signaling

Improperly installed wires can emit radio interference. In addition, the potential for damage from lightning strikes increases if wires exceed recommended distances or if wires pass between buildings. The electromagnetic pulse (EMP) caused by lightning can damage unshielded conductors and destroy electronic devices. If your site has previously experienced such problems, you might want to consult experts in electrical surge suppression and shielding.

Radio Frequency Interference

You can reduce or eliminate the emission of radio frequency interference (RFI) from your site wiring by using twisted-pair cable with a good distribution of grounding conductors. If you must exceed the recommended distances, use a high-quality twisted-pair cable with one ground conductor for each data signal when applicable.

Electromagnetic Compatibility

If your site is susceptible to problems with electromagnetic compatibility (EMC), particularly from lightning or radio transmitters, you might want to seek expert advice. Strong sources of electromagnetic interference (EMI) can destroy the signal drivers and receivers in the network device and conduct power surges over the lines into the equipment, resulting in an electrical hazard. It is particularly important to provide a properly grounded and shielded environment and to use electrical surge-suppression devices.

CAUTION: To comply with intrabuilding lightning and surge requirements, intrabuilding wiring must be shielded, and the shield for the wiring must be grounded at both ends.

Copyright © 2019, Juniper Networks, Inc.

WARNING: The intrabuilding ports of the equipment or subassembly are suitable for connection to intrabuilding or unexposed wiring or cabling only. The intrabuilding ports of the equipment or subassembly MUST NOT be metallically connected to interfaces that connect to the Outside Plant (OSP) or its wiring. These interfaces are designed for use as intrabuilding interfaces only (Type 2 or Type 4 ports as described in GR-1089-CORE, Issue 4) and require isolation from the exposed OSP cabling. The addition of primary protectors is not sufficient protection in order to connect these interfaces metallically to OSP wiring.

Related Documentation

- *General Electrical Safety Guidelines and Electrical Codes for Juniper Networks Devices*

Copyright © 2019, Juniper Networks, Inc.

CHAPTER 43

Agency Approvals and Compliance Statements

- T640 Agency Approvals on page 563
- Compliance Statements for EMC Requirements for Juniper Networks Devices (Canada) on page 564
- T640 Compliance Statements for EMC Requirements (European Community) on page 565
- Compliance Statements for EMC Requirements for Juniper Networks Devices (Israel) on page 565
- Compliance Statements for EMC Requirements for Juniper Networks Devices (Japan) on page 565
- Compliance Statements for EMC Requirements for Juniper Networks Devices (United States) on page 566
- Compliance Statements for Environmental Requirements on page 566
- T640 Compliance Statements for NEBS on page 566
- T640 Compliance Statements for Acoustic Noise on page 566

T640 Agency Approvals

The router complies with the following standards:

- Safety
  - CAN/CSA-22.2 No. 60950–1–07/UL 60950–1, 2nd Ed., Safety of Information Technology Equipment
  - EN 60825-1 Safety of Laser Products - Part 1: Equipment Classification, Requirements and User's Guide
- EMC
  - AS/NZS 3548 Class A (Australia/New Zealand)
  - EN55022 Class A (Europe)
  - FCC Part 15 Class A (USA)
  - VCCI Class A (Japan)

Copyright © 2019, Juniper Networks, Inc.

- Immunity
  - EN-61000-3-3 Voltage Fluctuations and Flicker
  - EN-61000-4-2 ESD
  - EN-61000-4-3 Radiated Immunity
  - EN-61000-4-4 EFT
  - EN-61000-4-5 Surge
  - EN-61000-4-6 Low Frequency Common Immunity
- ETSI EN-300386-2 Telecommunication Network Equipment. Electromagnetic Compatibility Requirements
- NEBS
  - GR-1089-Core: EMC and Electrical Safety for Network Telecommunications Equipment
  - SR-3580 NEBS Criteria Levels (Level 3 Compliance)
  - GR-63-Core: NEBS, Physical Protection

Related Documentation

- T640 Compliance Statements for Acoustic Noise on page 566
- T640 Compliance Statements for EMC Requirements (European Community) on page 565
- Compliance Statements for EMC Requirements for Juniper Networks Devices (Canada) on page 564
- Compliance Statements for EMC Requirements for Juniper Networks Devices (Japan) on page 565
- Compliance Statements for EMC Requirements for Juniper Networks Devices (United States) on page 566
- Compliance Statements for Environmental Requirements on page 566
- T640 Compliance Statements for NEBS on page 566

Compliance Statements for EMC Requirements for Juniper Networks Devices (Canada)

This Class A digital apparatus complies with Canadian ICES-003.

Cet appareil numérique de la classe A est conforme à la norme NMB-003 du Canada.

Related Documentation

- Compliance Statements for EMC Requirements for Juniper Networks Devices (Israel) on page 565
- Compliance Statements for EMC Requirements for Juniper Networks Devices (Japan) on page 565

Copyright © 2019, Juniper Networks, Inc.

- Compliance Statements for EMC Requirements for Juniper Networks Devices (United States) on page 566

T640 Compliance Statements for EMC Requirements (European Community)

This is a Class A product. In a domestic environment this product may cause radio interference in which case the user may be required to take adequate measures.

Related Documentation

- T640 Agency Approvals on page 563

Compliance Statements for EMC Requirements for Juniper Networks Devices (Israel)

אזהרה

מוצר זה הוא מוצר Class A.
בסביבה ביתית,מוצר זה עלול לגרום הפרעות בתדר רדיו,ובמקרה זה, המשתמש עשוי להידרש לנקוט אמצעים מתאימים.

Translation from Hebrew—Warning: This product is Class A. In residential environments, the product may cause radio interference, and in such a situation, the user may be required to take adequate measures.

Related Documentation

- Compliance Statements for EMC Requirements for Juniper Networks Devices (Canada) on page 564
- Compliance Statements for EMC Requirements for Juniper Networks Devices (Japan) on page 565
- Compliance Statements for EMC Requirements for Juniper Networks Devices (United States) on page 566

Compliance Statements for EMC Requirements for Juniper Networks Devices (Japan)

この装置は、クラス A 情報技術装置です。この装置を家庭環境で使用すると電波妨害を引き起こすことがあります。この場合には使用者が適切な対策を講ずるよう要求されることがあります。 VCCI-A

Translation from Japanese—This is a Class A product. In a domestic environment this product may cause radio interference in which case the user may be required to take adequate measures. VCCI-A

Related Documentation

Compliance Statements for EMC Requirements for Juniper Networks Devices (United States)

The hardware equipment has been tested and found to comply with the limits for a Class A digital device, pursuant to Part 15 of the FCC Rules. These limits are designed to provide reasonable protection against harmful interference when the equipment is operated in a commercial environment. This equipment generates, uses, and can radiate radio frequency energy and, if not installed and used in accordance with the instruction manual, may cause harmful interference to radio communications. Operation of this equipment in a residential area is likely to cause harmful interference in which case the user will be required to correct the interference at his own expense.

Related Documentation

-

Compliance Statements for Environmental Requirements

Batteries in this product are not based on mercury, lead, or cadmium substances. The batteries used in this product are in compliance with EU Directives 91/157/EEC, 93/86/EEC, and 98/101/EEC. The product documentation includes instructional information about the proper method of reclamation and recycling.

T640 Compliance Statements for NEBS

- The equipment is suitable for installation as part of the Common Bonding Network (CBN).
- The equipment is suitable for installations in Network Telecommunication Facilities.
- The equipment is suitable for installation in locations where the National Electrical Code (NEC) applies.
- The battery return connection is to be treated as an isolated DC return (DC-I), as defined in GR-1089-CORE.
- For Juniper systems with AC power supplies, an external surge protective device (SPD) must be used at the AC power source.

Related Documentation

- T640 Agency Approvals on page 563
- General Safety Guidelines for Juniper Networks Devices on page 525
- General Safety Warnings for Juniper Networks Devices on page 526

T640 Compliance Statements for Acoustic Noise

- Maschinenlärminformations-Verordnung - 3. GPSGV, der höchste Schalldruckpegel beträgt 74 dB(A) oder weniger gemäss EN ISO 7779
- Translation—The emitted sound pressure resulted in 74 dB(A) per EN ISO 7779.

Copyright © 2019, Juniper Networks, Inc.

Related Documentation

- T640 Agency Approvals on page 563
- General Safety Guidelines for Juniper Networks Devices on page 525
- General Safety Warnings for Juniper Networks Devices on page 526

Copyright © 2019, Juniper Networks, Inc.