Traffic Management Feature Guide for QFabric Systems

Modified: 2018-12-06

Copyright © 2018, Juniper Networks, Inc.

Juniper Networks, Inc.
1133 Innovation Way
Sunnyvale, California 94089
USA
408-745-2000
www.juniper.net

Juniper Networks, the Juniper Networks logo, Juniper, and Junos are registered trademarks of Juniper Networks, Inc. in the United States and other countries. All other trademarks, service marks, registered marks, or registered service marks are the property of their respective owners.

Juniper Networks assumes no responsibility for any inaccuracies in this document. Juniper Networks reserves the right to change, modify, transfer, or otherwise revise this publication without notice.

Traffic Management Feature Guide for QFabric Systems
Copyright © 2018 Juniper Networks, Inc. All rights reserved.

The information in this document is current as of the date on the title page.

YEAR 2000 NOTICE

Juniper Networks hardware and software products are Year 2000 compliant. Junos OS has no known time-related limitations through the year 2038. However, the NTP application is known to have some difficulty in the year 2036.

END USER LICENSE AGREEMENT

The Juniper Networks product that is the subject of this technical documentation consists of (or is intended for use with) Juniper Networks software. Use of such software is subject to the terms and conditions of the End User License Agreement ("EULA") posted at https://support.juniper.net/support/eula/. By downloading, installing or using such software, you agree to the terms and conditions of that EULA.

Table of Contents

About the Documentation . . . xxvii
Documentation and Release Notes . . . xxvii
Using the Examples in This Manual . . . xxvii
Merging a Full Example . . . xxviii
Merging a Snippet . . . xxviii
Documentation Conventions . . . xxix
Documentation Feedback . . . xxxi
Requesting Technical Support . . . xxxi
Self-Help Online Tools and Resources . . . xxxii
Opening a Case with JTAC . . . xxxii

Part 1 CoS Overview

Chapter 1 **Overview . . . 3**

Overview of Junos OS CoS . . . 4
CoS Standards . . . 4
How Junos OS CoS Works . . . 5
Default CoS Behavior . . . 6
Overview of Policers . . . 6
Policer Overview . . . 7
Policer Types . . . 7
Policer Actions . . . 8
Policer Colors . . . 9
Filter-Specific Policers . . . 9
Suggested Naming Convention for Policers . . . 10
Policer Counters . . . 10
Policer Algorithms . . . 10
How Many Policers Are Supported? . . . 11
Policers Can Limit Egress Firewall Filters . . . 11

Chapter 2 **Basic Concepts . . . 13**

Configuring CoS . . . 13
Understanding Junos CoS Components . . . 17
Code-Point Aliases . . . 18
Policers . . . 18
Classifiers . . . 18
Forwarding Classes . . . 19
Forwarding Class Sets . . . 20
Flow Control (Ethernet PAUSE, PFC, and ECN) . . . 20
WRED Profiles and Tail Drop . . . 21
Schedulers . . . 22

Rewrite Rules 22
Assigning CoS Components to Interfaces 23
Understanding CoS Packet Flow 25
Understanding Default CoS Settings 27
Default Forwarding Classes and Queue Mapping 27
Default Forwarding Class Sets (Priority Groups) 28
Default Code-Point Aliases 28
Default Classifiers 30
Default Rewrite Rules 33
Default Drop Profile 34
Default Schedulers 34
Default Scheduler Maps 37
Default Shared Buffer Configuration 37
CoS Inputs and Outputs Overview 38

Chapter 3 **CoS Upgrade Requirements and Feature Change Compatibility 39**

Overview of CoS Upgrade Requirements (Junos OS Release 11.1 or 11.2 to a Later Release) 40
Overview of CoS Upgrade Requirements to Junos OS Release 12.2 42
Overview of CoS Upgrade Requirements to Junos OS Release 12.3 (QFX3500 and QFX3600 Switches) or to Junos OS Release 13.1 (QFabric Systems) . . . 44
Support for Six Lossless Forwarding Classes 44
Scheduling on QFabric System Node Device Fabric (fte) Ports 46
Strict-High Priority Scheduling on QFabric System Node Device Fabric (fte) Ports 46
Overview of CoS Changes Introduced in Junos OS Release 11.3 46
CoS Default Value Changes 47
Default Forwarding Classes 47
Default IEEE 802.1p Unicast Classifiers 48
Default IEEE 802.1p Multidestination Classifiers 49
Default Scheduler 50
Queue Priority Configuration Changes 52
Minimum Guaranteed Bandwidth (Transmit Rate and Guaranteed Rate) Changes 52
Excess Rate Statement Disabled 53
Queue Scheduling (Low and Strict-High Priority Queues) 53
Multidestination Traffic Changes 54
Overview of CoS Changes Introduced in Junos OS Release 12.2 54
Lossless Forwarding Classes (fcoe and no-loss) 55
Default MTU for Headroom Buffer Calculation for Lossless Forwarding Classes 55
CoS for Layer 3 Physical Interfaces 56
DSCP IPv6 Classifiers and Rewrite Rules 56

 Copyright © 2018, Juniper Networks, Inc.

Part 2 Classifying Traffic (Classifiers, Forwarding Classes, and Rewrite Rules)

Chapter 4 Using Classifiers, Forwarding Classes, and Rewrite Rules 59

Understanding CoS Classifiers 60
Interfaces and Output Queues 60
Output Queues for Unicast and Multidestination Traffic 61
Classifier Support by Type 62
Behavior Aggregate Classifiers 63
Default Behavior Aggregate Classification 63
Importing a Classifier 64
Multidestination Classifiers 65
PFC Priorities 65
Fixed Classifiers on Ethernet Interfaces 66
Fixed Classifiers on Native Fibre Channel Interfaces (NP_Ports) 67
Multifield Classifiers 67
MPLS EXP Classifiers 67
Packet Classification for IRB Interfaces and RVIs 68
Defining CoS BA Classifiers (DSCP, DSCP IPv6, IEEE 802.1p) 69
Defining CoS BA Classifiers (DSCP, DSCP IPv6, IEEE 802.1p) 71
Example: Configuring Unicast Classifiers 72
Example: Configuring Multidestination (Multicast, Broadcast, DLF) Classifiers 75
Understanding Host Inbound Traffic Classification 78
Understanding Default CoS Scheduling and Classification 79
Default Classification 79
Default Scheduling 83
Default DCBX Advertisement 86
Default Scheduling and Classification Summary 87
Understanding Applying CoS Classifiers and Rewrite Rules to Interfaces 87
Supported Classifier and Rewrite Rule Types 88
Ethernet Interfaces Supported for Classifier and Rewrite Rule Configuration 90
Interface Types That Support Classifier and Rewrite Rule Configuration 90
Classifier and Rewrite Rule Physical and Logical Ethernet Interface Support 90
Routed VLAN Interfaces (RVIs) and Integrated Routing and Bridging (IRB) Interfaces 92
Default Classifiers 93
Default Rewrite Rules 93
Classifier Precedence 93
Classifier Precedence on Physical Ethernet Interfaces (QFX5200, QFX5100, EX4600, QFX3500, and QFX3600 Switches, and QFabric Systems) 94
Classifier Precedence on Logical Ethernet Interfaces (All Switches) . . . 94
Classifier Behavior and Limitations 95
Rewrite Rule Precedence and Behavior 96

Copyright © 2018, Juniper Networks, Inc.

Classifier and Rewrite Rule Configuration Interaction with Ethernet Interface Configuration . . . 97
QFX5100, QFX5200, EX4600, QFX3500, and QFX3600 Switch Scenarios . . . 98
Understanding CoS Code-Point Aliases . . . 100
Defining CoS Code-Point Aliases . . . 103
Understanding CoS Forwarding Classes . . . 104
Default Forwarding Classes . . . 106
Forwarding Class Configuration Rules . . . 107
Queue Assignment Rules . . . 107
Scheduling Rules . . . 108
Rewrite Rules . . . 108
Lossless Transport Support . . . 109
Defining CoS Forwarding Classes . . . 111
Example: Configuring Forwarding Classes . . . 113
Understanding CoS Forwarding Class Sets (Priority Groups) . . . 118
Defining CoS Forwarding Class Sets . . . 120
Example: Configuring Forwarding Class Sets . . . 120
Understanding Host Routing Engine Outbound Traffic Queues and Defaults . . . 124
Changing the Host Outbound Traffic Default Queue Mapping . . . 126
Understanding CoS Rewrite Rules . . . 127
Defining CoS Rewrite Rules . . . 130
Configuring CoS Fixed Classifier Rewrite Values for Native FC Interfaces (NP_Ports) . . . 132
Troubleshooting an Unexpected Rewrite Value . . . 133

Part 3 Scheduling Traffic

Chapter 5 **Using Schedulers (Node Devices) . . . 139**

Understanding Default CoS Scheduling and Classification . . . 140
Default Classification . . . 140
Default Scheduling . . . 144
Default DCBX Advertisement . . . 147
Default Scheduling and Classification Summary . . . 148
Understanding CoS Scheduling on QFabric System Node Device Fabric (fte) Ports . . . 149
Hierarchical Scheduling Architecture on QFabric System Node Devices . . . 149
Default Scheduling on Node Device Fabric Interfaces . . . 150
Configuring Scheduling on Node Device Fabric Interfaces . . . 151
Similarities Between Node Device Fabric Interface and Access Interface Scheduling . . . 151
Differences Between Node Device Fabric Interface and Access Interface Scheduling . . . 152
Understanding CoS Scheduling Behavior and Configuration Considerations . . . 153
Understanding CoS Output Queue Schedulers . . . 159
Output Queue Scheduling Components . . . 160
Default Schedulers . . . 161
Transmit Rate (Minimum Guaranteed Bandwidth) . . . 161
Sharing Extra Bandwidth . . . 162

 Copyright © 2018, Juniper Networks, Inc.

Shaping Rate (Maximum Bandwidth) 163
Scheduling Priority 163
Scheduler Drop-Profile Maps 163
Buffer Size 164
Explicit Congestion Notification 165
Scheduler Maps 165
Defining CoS Queue Schedulers 166
Example: Configuring Queue Schedulers 169
Defining CoS Queue Scheduling Priority 176
Example: Configuring Queue Scheduling Priority 178
Understanding CoS Traffic Control Profiles 182
Understanding CoS Priority Group Scheduling 184
Priority Group Scheduling Components 184
Default Traffic Control Profile 185
Guaranteed Rate (Minimum Guaranteed Bandwidth) 185
Sharing Extra Bandwidth 185
Shaping Rate (Maximum Bandwidth) 186
Scheduler Maps 186
Defining CoS Traffic Control Profiles (Priority Group Scheduling) 187
Example: Configuring Traffic Control Profiles (Priority Group Scheduling) 188
Understanding CoS Hierarchical Port Scheduling (ETS) 192
Hierarchical Scheduling Tiers 192
Hierarchical Scheduling and ETS 193
ETS Advertisement in DCBX 195
Hierarchical Scheduling Process 195
Strict-High Priority Queues and Hierarchical Scheduling 197
Default Hierarchical Scheduling 197
Example: Configuring CoS Hierarchical Port Scheduling (ETS) 198
Understanding CoS Priority Group and Queue Guaranteed Minimum Bandwidth 224
Guaranteeing Bandwidth Using Hierarchical Scheduling 225
Priority Group Guaranteed Rate (Guaranteed Minimum Bandwidth) 226
Queue Transmit Rate (Guaranteed Minimum Bandwidth) 226
Understanding CoS Priority Group Shaping and Queue Shaping (Maximum Bandwidth) 227
Priority Group Shaping 227
Queue Shaping 228
Shaping Maximum Bandwidth Using Hierarchical Scheduling 228
Example: Configuring Minimum Guaranteed Output Bandwidth 229
Troubleshooting Egress Bandwidth That Exceeds the Configured Minimum Bandwidth 235
Example: Configuring Maximum Output Bandwidth 236
Troubleshooting Egress Bandwidth That Exceeds the Configured Maximum Bandwidth 241
Troubleshooting Egress Queue Bandwidth Impacted by Congestion 241
Understanding CoS WRED Drop Profiles 243
Drop Profile Parameters 244
Defining Drop Profiles on Switches Except QFX10000 244
Defining Drop Profiles on QFX10000 Switches 245

Default Drop Profile 246
Packet Drop Method 246
Packet Drop Example for Switches Except QFX10000 246
Drop Profile Maps 247
Congestion Prevention 247
Configuring a WRED Drop Profile and Applying it to an Output Queue 248
Drop Profiles on Explicit Congestion Notification Enabled Queues 249
Configuring CoS WRED Drop Profiles 250
Drop Profiles on Switches Except QFX10000 250
Drop Profiles on QFX 10000 Switches 251
Example: Configuring WRED Drop Profiles 252
Configuring CoS Drop Profile Maps 258
Example: Configuring Drop Profile Maps 258
Troubleshooting a Port Reset on QFabric Systems When a Queue Stops Transmitting Traffic 261

Chapter 6 **Using Schedulers (Interconnect Device Fabric) 265**

Understanding Default CoS Scheduling on QFabric System Interconnect Devices (Junos OS Release 13.1 and Later Releases) 265
Hierarchical CoS Architecture Across a QFabric System Interconnect Device 265
Fabric FC-Sets 266
Class Groups for Fabric FC-Sets 267
Default CoS on Interconnect Device Fabric Interfaces 267
Default Class Group Scheduling 267
Default Fabric FC-Set Scheduling 268
Default Class Group and Fabric FC-Set Scheduling Example 271
Default PFC and Lossless Transport Across the Interconnect Device . . 272
Understanding CoS Scheduling Across the QFabric System 276
CoS Flow Through the QFabric System 277
Hierarchical Scheduling Architecture on QFabric System Node Devices . . . 279
Default Scheduling on Node Device Fabric Interfaces 280
Hierarchical CoS Architecture Across a QFabric System Interconnect Device 280
Fabric FC-Sets 281
Class Groups for Fabric FC-Sets 281
Default CoS on Interconnect Device Fabric Interfaces 282
Default Class Group Scheduling 282
Default Fabric FC-Set Bandwidth Scheduling 283
Default Class Group and Fabric FC-Set Scheduling Example 284
Default PFC and Lossless Transport Across the Interconnect Device . . 286
Configuring CoS on Interconnect Device Fabric Interfaces 288
Similarities Between Node Device Scheduling and Interconnect Device Scheduling 289
Differences Between Node Device and Interconnect Device Hierarchical Scheduling 289
Hierarchical Scheduling Configuration Components 291
Hierarchical Scheduling Bandwidth Allocation 291

 Copyright © 2018, Juniper Networks, Inc.

Interconnect Device Hierarchical Scheduling (Class Group and Fabric FC-Set) Example . . . 292
Configuring Scheduling on Node Device Fabric Interfaces . . . 295
Similarities Between Node Device Fabric Interface and Access Interface Scheduling . . . 295
Differences Between Node Device Fabric Interface and Access Interface Scheduling . . . 295
Congestion Management . . . 296
Lossy (Best Effort) Unicast Traffic . . . 296
Lossless Traffic . . . 297
Multidestination Traffic . . . 297
Example: Configuring CoS Scheduling Across the QFabric System . . . 297
Understanding CoS Fabric Forwarding Class Sets . . . 330
Default Fabric Forwarding Class Sets . . . 331
Fabric Forwarding Class Set Configuration and Implementation . . . 334
Mapping Forwarding Classes to Fabric Forwarding Class Sets . . . 334
Fabric Forwarding Class Set Implementation . . . 335
QFabric System CoS . . . 336
Support for Flow Control and Lossless Transport Across the Fabric . . . 336
Viewing Fabric Forwarding Class Set Information . . . 339
Summary of Fabric Forwarding Class Set and Node Device Forwarding Class Set Differences . . . 340
Configuring CoS Fabric Forwarding Class Set Scheduler Maps (Fabric Scheduler to Fabric FC-Set Mapping) . . . 341
Understanding How to Mitigate Fate Sharing on a QFabric System Interconnect Device by Remapping Traffic Flows (Forwarding Classes) . . . 343
Fate Sharing on the Interconnect Device . . . 344
Scenario 1: How Fate Sharing Can Occur on a QFabric System Interconnect Device . . . 346
Scenario 2: How Forwarding Class Remapping Mitigates Fate Sharing on a QFabric System Interconnect Device . . . 348
Fate Sharing Mitigation Process . . . 350
Forwarding Classes (Node Devices) . . . 351
Firewall Filter Construction (Node Devices) . . . 352
Applying Firewall Filters to Traffic (Node Devices) . . . 356
Mapping Forwarding Classes to Fabric Forwarding Class Sets (Interconnect Device) . . . 358
Scheduling Bandwidth for Fabric Forwarding-Class Sets (Interconnect Device) . . . 360
Multidestination Traffic (FCoE Initialization Protocol Traffic) . . . 360
Best Practices . . . 362
VLANs . . . 362
Source/Destination MAC Address for FCoE Traffic . . . 362
Firewall Filter Term Sequence . . . 362
Limitations and Notes on Behavior . . . 363
Limitations . . . 363
Notes on Behavior . . . 364
Configuring Fate Sharing Mitigation Across the Interconnect Device by Remapping Traffic Flows (Forwarding Classes) . . . 366

Part 4 Configuring Data Center Bridging (ETS, PFC, DCBX) and Flow Control

Chapter 7 Using Data Center Bridging and Flow Control 375

Understanding DCB Features and Requirements 376
Lossless Transport 377
PFC 377
Buffer Management 377
Physical Interfaces 377
ETS 378
DCBX 378
Understanding CoS Hierarchical Port Scheduling (ETS) 379
Hierarchical Scheduling Tiers 380
Hierarchical Scheduling and ETS 381
ETS Advertisement in DCBX 382
Hierarchical Scheduling Process 382
Strict-High Priority Queues and Hierarchical Scheduling 384
Default Hierarchical Scheduling 384
Example: Configuring CoS Hierarchical Port Scheduling (ETS) 386
Disabling the ETS Recommendation TLV 413
Understanding CoS Flow Control (Ethernet PAUSE and PFC) 414
General Information about Ethernet PAUSE and PFC and When to Use Them 414
Ethernet PAUSE 415
Symmetric Flow Control 416
Asymmetric Flow Control 416
PFC 420
Lossless Transport Support Summary 423
Enabling and Disabling CoS Symmetric Ethernet PAUSE Flow Control 426
Configuring CoS Asymmetric Ethernet PAUSE Flow Control 427
Configuring CoS PFC (Congestion Notification Profiles) 429
Example: Configuring CoS PFC for FCoE Traffic 432
Troubleshooting Dropped FCoE Traffic 442
Understanding CoS IEEE 802.1p Priorities for Lossless Traffic Flows 446
Default Lossless Priority Configuration 446
Configuring Lossless Priorities 449
Configuring Lossless Forwarding Classes (Packet Drop Attribute) . . . 449
Congestion Notification Profiles (PFC Configuration) 451
Configuring DCBX (Application Protocol TLV Exchange) 458
Fate Sharing Among Traffic Classes 458
Transit Switch Configuration Versus FCoE-FC Gateway Configuration 460
Configuration Results and Commit Checks 460
Configuration Rules and Recommendations 462
Lossless Transport Features Introduced in Junos OS Release 12.3 (Legacy Non-ELS CLI) 463
Backward Compatibility with Junos OS Releases Earlier Than Release 12.3 (Legacy Non-ELS CLI) 464

 Copyright © 2018, Juniper Networks, Inc.

Example: Configuring Lossless FCoE Traffic When the Converged Ethernet Network Does Not Use IEEE 802.1p Priority 3 for FCoE Traffic (FCoE Transit Switch) . . . 465
Example: Configuring Two or More Lossless FCoE Priorities on the Same FCoE Transit Switch Interface . . . 474
Example: Configuring Two or More Lossless FCoE IEEE 802.1p Priorities on Different FCoE Transit Switch Interfaces . . . 484
Example: Configuring Lossless IEEE 802.1p Priorities on Ethernet Interfaces for Multiple Applications (FCoE and iSCSI) . . . 500
Understanding CoS IEEE 802.1p Priority Remapping on an FCoE-FC Gateway . . . 519
Priority Remapping Configuration . . . 519
Configuration Rules . . . 520
Fate Sharing . . . 521
Example: Configuring IEEE 802.1p Priority Remapping on an FCoE-FC Gateway . . . 522
Understanding DCBX . . . 533
DCBX Basics . . . 533
DCBX Modes and Support . . . 534
DCBX Modes (Versions) . . . 534
Autonegotiation . . . 536
CNA Support for DCBX Modes . . . 536
Interface Support for DCBX . . . 537
DCBX Attribute Types . . . 537
Asymmetric Attributes . . . 537
Symmetric Attributes . . . 538
DCBX Application Protocol TLV Exchange . . . 538
Application Protocol TLV Exchange . . . 538
FCoE Application Protocol TLV Exchange . . . 538
Disabling Application Protocol TLV Exchange . . . 539
DCBX and PFC . . . 539
DCBX and ETS . . . 539
Default DCBX ETS Advertisement . . . 540
ETS Advertisement and Peer Configuration . . . 540
ETS Recommendation TLV . . . 540
Configuring the DCBX Mode . . . 542
Configuring DCBX Autonegotiation . . . 543
Understanding DCBX Application Protocol TLV Exchange . . . 546
Applications . . . 546
Application Maps . . . 547
Classifying and Prioritizing Application Traffic . . . 548
Enabling Interfaces to Exchange Application Protocol Information . . . 549
Disabling DCBX Application Protocol Exchange . . . 549
Defining an Application for DCBX Application Protocol TLV Exchange . . . 550
Configuring an Application Map for DCBX Application Protocol TLV Exchange . . . 551
Applying an Application Map to an Interface for DCBX Application Protocol TLV Exchange . . . 552
Example: Configuring DCBX Application Protocol TLV Exchange . . . 553

Part 5 Configuring Buffers

Chapter 8 Using Buffers 567

Understanding CoS Buffer Configuration 568
Buffer Pools 570
Buffer Handling of Lossless Flows (PFC) Versus Ethernet PAUSE 572
Shared Buffer Pool and Partitions 572
Dedicated Port Buffer Pool and Buffer Allocation to Queues 574
Trade-off Between Shared Buffer Space and Dedicated Buffer Space 577
Order of Buffer Consumption 578
Default Buffer Pool Values 579
Total Buffer Pool Size 579
Shared Buffer Pool Default Values 579
Dedicated Buffer Pool Default Values 582
Shared Buffer Configuration Recommendations for Different Network Traffic Scenarios 583
Balanced Traffic (Default Configuration) 584
Best-Effort Unicast Traffic 585
Ethernet PAUSE Traffic 585
Best-Effort Multicast (Multidestination) Traffic 586
Lossless Traffic 586
Optimizing Buffer Configuration 587
General Buffer Configuration Rules and Considerations 588
Configuring Global Ingress and Egress Shared Buffers 590
Example: Recommended Configuration of the Shared Buffer Pool for Networks with Mostly Best-Effort Unicast Traffic 592
Example: Recommended Configuration of the Shared Buffer Pool for Networks with Mostly Best-Effort Traffic on Links with Ethernet PAUSE Enabled . . . 598
Example: Recommended Configuration of the Shared Buffer Pool for Networks with Mostly Multicast Traffic 605
Example: Recommended Configuration of the Shared Buffer Pool for Networks with Mostly Lossless Traffic 611

Chapter 9 Learn About Technology 619

Data Center Technology Overview Videos 619
Learn About Video: Why Do We Need an IP Fabric? 619
Learn About Video: What is the Best Control Plane Protocol to Use in a Data Center IP Fabric? 619
Learn About Video: Why Use an Overlay Network in a Data Center? 619
Conceptual Documents That Contain Technology Overview Videos 620

Part 6 Configuration Statements and Operational Commands

Chapter 10 Configuration Statements (Basic Concepts) 623

class-of-service 624
traceoptions (Class of Service) 628

Copyright © 2018, Juniper Networks, Inc.

Chapter 11 Configuration Statements (Classifiers and Rewrite Rules) 631
class (Forwarding Classes) 633
class (Forwarding Class Sets) 634
classifiers 635
code-point (Fibre Channel Interfaces) 637
code-point (Rewrite Rules) 638
code-point-aliases 639
code-points (CoS) 640
dscp 641
dscp-ipv6 643
dscp-code-point 644
forwarding-class (Fibre Channel Interfaces) 645
forwarding-class (Host Outbound Traffic) 646
forwarding-class-sets 647
forwarding-classes 648
host-outbound-traffic 650
ieee-802.1 651
ieee-802.1 (Fibre Channel Interfaces) 653
import 654
input (Fibre Channel Interfaces) 655
interfaces (Class of Service) 656
loss-priority (Classifiers) 658
loss-priority (Rewrite Rules) 659
multi-destination 660
queue-num 661
rewrite-rules 663
rewrite-value (Fibre Channel Interfaces) 665
unit 667
Chapter 12 Configuration Statements (Node Device Scheduling) 669
buffer-size 670
drop-probability 675
drop-profile 676
drop-profile-map 677
drop-profiles 678
fill-level 679
forwarding-class 681
forwarding-class-set 682
guaranteed-rate 683
interpolate 684
loss-priority (Drop Profiles) 685
output-traffic-control-profile 686
priority (Schedulers) 687
protocol (Drop Profile Map) 688
scheduler 689
scheduler-map 690
scheduler-maps 690
schedulers 691
shaping-rate 692

Copyright © 2018, Juniper Networks, Inc.

traffic-control-profiles 694
transmit-rate 695

Chapter 13 Configuration Statements (Interconnect Device Fabric Scheduling) 701

forwarding-class-set (Interconnect Device) 701
scheduler (Interconnect Device) 702
scheduler-map-forwarding-class-sets 703

Chapter 14 Configuration Statements (Data Center Bridging and Flow Control) 705

application (Application Maps) 706
application (Applications) 707
application-map 708
application-maps 709
applications (Applications) 710
applications (DCBX) 711
cable-length (Congestion Notification) 712
code-point (Input Congestion Notification) 713
code-point (Output Congestion Notification) 714
code-points (Application Maps) 715
configured-flow-control 716
congestion-notification-profile 718
dcbx 720
dcbx-version 721
destination-port (Applications) 722
disable (DCBX) 723
enhanced-transmission-selection 724
ether-type 725
flow-control 726
flow-control-queue (Output Congestion Notification) 728
ieee-802.1 (Input Congestion Notification) 729
ieee-802.1 (Output Congestion Notification) 730
input (Congestion Notification) 731
interface (DCBX) 732
interfaces (Class of Service) 733
mru 735
output (Congestion Notification) 736
pfc (Input Congestion Notification) 737
policy-options 738
priority-flow-control 739
protocol (Applications) 740
recommendation-tlv 741
rx-buffers 742
tx-buffers 744

Chapter 15 Configuration Statements (Buffers) 747

buffer-partition (Egress) 748
buffer-partition (Ingress) 750
buffer-size 752
egress (Buffer Configuration) 757
ingress (Buffer Configuration) 759

 Copyright © 2018, Juniper Networks, Inc.

shared-buffer 761

Chapter 16 Operational Commands (Basic Concepts) 763

Monitoring Interfaces That Have CoS Components 763
show class-of-service 765
show class-of-service interface 770
show pfe next-hop 801
show pfe route 806
show pfe terse 816
show pfe version 819

Chapter 17 Operational Commands (Classifiers and Rewrite Rules) 821

Monitoring CoS Classifiers 821
Monitoring CoS Forwarding Classes 822
Monitoring CoS Rewrite Rules 825
Monitoring CoS Code-Point Value Aliases 826
show class-of-service classifier 828
show class-of-service code-point-aliases 831
show class-of-service forwarding-class 833
show class-of-service forwarding-class-set 836
show class-of-service forwarding-table 838
show class-of-service forwarding-table classifier 842
show class-of-service forwarding-table classifier mapping 844
show class-of-service forwarding-table rewrite-rule 846
show class-of-service forwarding-table rewrite-rule mapping 848
show class-of-service interface 850
show class-of-service multi-destination 881
show class-of-service rewrite-rule 883

Chapter 18 Operational Commands (Node Device Scheduling) 885

Monitoring CoS Scheduler Maps 885
show class-of-service drop-profile 887
show class-of-service forwarding-table 891
show class-of-service forwarding-table drop-profile 895
show class-of-service forwarding-table scheduler-map 897
show class-of-service interface 899
show class-of-service scheduler-map 930
show class-of-service traffic-control-profile 933
show interfaces queue 938

Chapter 19 Operational Commands (Interconnect Device Scheduling) 981

show class-of-service scheduler-map-forwarding-class-sets 982

Chapter 20 Operational Commands (Data Center Bridging and Lossless Transport) 985

show class-of-service congestion-notification 986
show dcbx 990
show dcbx neighbors 991

Chapter 21 Operational Commands (Buffers) 1019

show class-of-service shared-buffer 1020

Copyright © 2018, Juniper Networks, Inc.

List of Figures

Part 1 CoS Overview

Chapter 1 Overview 3

Figure 1: Packet Flow Across the Network 6
Figure 2: Flow of Tricolor Marking Policer Operation 7

Chapter 2 Basic Concepts 13

Figure 3: CoS Classifier, Queues, and Scheduler 26
Figure 4: Packet Flow Through Configurable CoS Components 26

Part 3 Scheduling Traffic

Chapter 5 Using Schedulers (Node Devices) 139

Figure 5: Hierarchical Scheduling Tiers 194
Figure 6: Hierarchical Scheduling Packet Flow 196
Figure 7: Hierarchical Port Scheduling Components Block Diagram 203
Figure 8: Hierarchical Port Scheduling Packet Flow Block Diagram 204
Figure 9: Allocating Guaranteed Bandwidth Using Hierarchical Scheduling 225
Figure 10: Setting Maximum Bandwidth Using Hierarchical Scheduling 229
Figure 11: WRED-Drop Profile Packet Drop Pattern 244
Figure 12: WRED Drop Profile Packet Drop Example 255

Chapter 6 Using Schedulers (Interconnect Device Fabric) 265

Figure 13: QFabric System CoS Flow 277
Figure 14: Configuration Components of Interconnect Device Hierarchical Scheduling 291
Figure 15: Network Topology for Scheduling Across the QFabric System 300
Figure 16: Fate Sharing Scenario: FCoE Traffic Shares Fate on the Interconnect Device 347
Figure 17: Fate Sharing Mitigation Scenario: FCoE Traffic Avoids Fate Sharing on the Interconnect Device 349

Part 4 Configuring Data Center Bridging (ETS, PFC, DCBX) and Flow Control

Chapter 7 Using Data Center Bridging and Flow Control 375

Figure 18: Hierarchical Scheduling Tiers 381
Figure 19: Hierarchical Scheduling Packet Flow 384
Figure 20: Hierarchical Port Scheduling Components Block Diagram 391
Figure 21: Hierarchical Port Scheduling Packet Flow Block Diagram 391
Figure 22: PFC for FCoE Traffic Configuration Components Block Diagram 434
Figure 23: Topology of the Two Lossless FCoE Priorities Example 486

Figure 24: Topology of the Lossless FCoE and iSCSI Priorities Example 502
Figure 25: Topology of the IEEE 802.1p Priority Remapping Example 524

Copyright © 2018, Juniper Networks, Inc.

List of Tables

About the Documentation xxvii

Table 1: Notice Icons xxix
Table 2: Text and Syntax Conventions xxx

Part 1 CoS Overview

Chapter 1 Overview 3

Table 3: Policer Actions 8

Chapter 2 Basic Concepts 13

Table 4: CoS Configuration Tasks 14
Table 5: Default Forwarding Classes and Queue Mapping 27
Table 6: Default IEEE 802.1 Code-Point Aliases 29
Table 7: Default DSCP and DCSP IPv6 Code-Point Aliases 29
Table 8: Default IEEE 802.1 Classifiers for Ports in Trunk Mode or Tagged Access Mode (Trusted Classifier) 30
Table 9: Default IEEE 802.1 Classifiers for Ports in Access Mode (Untrusted Classifier) 31
Table 10: Default IEEE 802.1 Multidestination Classifiers 31
Table 11: Default DSCP IP and IPv6 Classifiers 32
Table 12: Default EXP Classifiers on QFX10000 Switches 33
Table 13: Default Drop Profile 34
Table 14: Default Schedulers 34
Table 15: Default Scheduler Maps 37
Table 16: Default Ingress Shared Buffer Configuration 37
Table 17: Default Egress Shared Buffer Configuration 37
Table 18: CoS Mappings—Inputs and Outputs 38

Chapter 3 CoS Upgrade Requirements and Feature Change Compatibility 39

Table 19: Junos OS Release 11.1 and 11.2 Default Forwarding Classes and Queue Mapping 47
Table 20: Junos OS Release 11.3 Default Forwarding Classes and Queue Mapping 48
Table 21: Junos OS Release 11.1 and 11.2 Default IEEE 802.1 Unicast Classifiers . . . 48
Table 22: Junos OS Release 11.3 Default IEEE 802.1 Unicast Classifiers 49
Table 23: Junos OS Release 11.1 and 11.2 Default IEEE 802.1 Multidestination Classifiers 49
Table 24: Junos OS Release 11.3 Default IEEE 802.1 Multidestination Classifiers 50
Table 25: Junos OS Release 11.1 and 11.2 Default Schedulers 51
Table 26: Default Schedulers 51

Part 2 Classifying Traffic (Classifiers, Forwarding Classes, and Rewrite Rules)

Chapter 4 Using Classifiers, Forwarding Classes, and Rewrite Rules 59

Table 27: Classifier Support by Classifier Type 62
Table 28: Default BA Classification 63
Table 29: Default IEEE 802.1p Code Point to PFC Priority, Output Queue, and Forwarding Class Mapping 65
Table 30: ba-ucast-classifier Loss Priority Assignments 73
Table 31: BA-mcast-classifier Loss Priority Assignments 77
Table 32: Default IEEE 802.1 Classifiers for Ports in Trunk Mode or Tagged-Access Mode (Trusted Classifier) 80
Table 33: Default IEEE 802.1 Classifiers for Ports in Access Mode (Untrusted Classifier) 81
Table 34: Default IEEE 802.1 Multidestination Classifiers 81
Table 35: Default DSCP IP and IPv6 Classifiers 82
Table 36: Default EXP Classifiers on QFX10000 Switches and NFX Series Devices 83
Table 37: Default Scheduler Configuration 84
Table 38: Supported Classifiers and Rewrite Rules 88
Table 39: Ethernet Interface Support for Classifier and Rewrite Rule Configuration (QFX5100, QFX5200, EX4600, QFX3500, and QFX3600 Switches, and QFabric Systems) 91
Table 40: Ethernet Interface Support for Classifier and Rewrite Rule Configuration (QFX10000 Switches) 92
Table 41: Default IEEE 802.1 Code-Point Aliases 101
Table 42: Default DSCP and DSCP IPv6 Code-Point Aliases 101
Table 43: Default Forwarding Classes 106
Table 44: Default Forwarding Classes for Multidestination Packets 107
Table 45: Forwarding-Class-to-Queue Example Configuration Except on QFX10000 116
Table 46: Forwarding-Class-to-Queue Example Configuration on QFX10000 117
Table 47: Components of the Forwarding Class Sets Configuration Example . . . 122
Table 48: Routing Engine Protocol Default Queue Mapping 125
Table 49: Configuring Rewrite Rules 128

Part 3 Scheduling Traffic

Chapter 5 Using Schedulers (Node Devices) 139

Table 50: Default IEEE 802.1 Classifiers for Ports in Trunk Mode or Tagged-Access Mode (Trusted Classifier) 141
Table 51: Default IEEE 802.1 Classifiers for Ports in Access Mode (Untrusted Classifier) 142
Table 52: Default IEEE 802.1 Multidestination Classifiers 142
Table 53: Default DSCP IP and IPv6 Classifiers 143
Table 54: Default EXP Classifiers on QFX10000 Switches and NFX Series Devices 144
Table 55: Default Scheduler Configuration 145

Copyright © 2018, Juniper Networks, Inc.

Table 56: Class Group Default Scheduling Properties and Membership on Node Device Fabric Interfaces . . . 151
Table 57: Output Queue Scheduler Components . . . 160
Table 58: Other Scheduling Components . . . 161
Table 59: Components of the Queue Scheduler Configuration Example . . . 172
Table 60: Components of the Queue Scheduler Priority Configuration Example . . . 180
Table 61: Priority Group Scheduler Components . . . 184
Table 62: Other Scheduling Components . . . 185
Table 63: Hierarchical Scheduling Tiers . . . 193
Table 64: Components of the Hierarchical Port Scheduling (ETS) Configuration Topology . . . 201
Table 65: Components of the Minimum Guaranteed Output Bandwidth Configuration Example . . . 231
Table 66: Components of the Maximum Output Bandwidth Configuration Example . . . 237
Table 67: Components of the Rate Shaping Troubleshooting Example . . . 262

Chapter 6 **Using Schedulers (Interconnect Device Fabric) . . . 265**

Table 68: Hierarchical Scheduler Architecture on Node Devices and Interconnect Devices . . . 266
Table 69: Class Group Default Scheduling Properties and Membership . . . 268
Table 70: Default Fabric FC-Set Scheduler Configuration . . . 269
Table 71: Lossless Priority (Forwarding Class) Support for Node Devices When Fewer than Six Lossless Priorities Are Supported . . . 274
Table 72: Default Node Device Fabric Interface Forwarding Class Scheduler Configuration . . . 280
Table 73: Bandwidth Scheduler Architecture on Node Devices and Interconnect Devices . . . 281
Table 74: Class Group Default Scheduling Properties and Membership . . . 282
Table 75: Default Fabric FC-Set Scheduler Configuration . . . 283
Table 76: Lossless Priority (Forwarding Class) Support for Node Devices When Fewer than Six Lossless Priorities Are Supported . . . 288
Table 77: Node Device and Interconnect Device Hierarchical Scheduling Differences . . . 289
Table 78: Components of the QFabric Node Device Hierarchical Port Scheduling Configuration Topology . . . 301
Table 79: Components of the QFabric Interconnect Device Hierarchical Port Scheduling Configuration Topology . . . 305
Table 80: Default Fabric Forwarding Class Sets . . . 331
Table 81: Default Forwarding Class to Fabric Forwarding Class Set Mapping . . . 332
Table 82: Lossless Priority (Forwarding Class) Support for Node Devices When Fewer than Six Lossless Priorities Are Supported . . . 338
Table 83: show class-of-service forwarding-class-set Command Output Fields . . . 340
Table 84: Summary of Differences Between Fabric fc-sets and Local fc-sets . . . 340
Table 85: Default Fabric Forwarding Class Sets . . . 358

Copyright © 2018, Juniper Networks, Inc.

Part 4 Configuring Data Center Bridging (ETS, PFC, DCBX) and Flow Control

Chapter 7 Using Data Center Bridging and Flow Control 375

Table 86: Hierarchical Scheduling Tiers 380
Table 87: Components of the Hierarchical Port Scheduling (ETS) Configuration Topology 388
Table 88: Asymmetric Ethernet PAUSE Flow Control Configuration 417
Table 89: Flow Control State Advertised to the Connected Peer (Autonegotiation) 418
Table 90: Asymmetric Ethernet PAUSE Behavior on Local and Peer Interfaces 419
Table 91: Default PFC Priority to Queue and Forwarding Class Mapping 421
Table 92: Components of the PFC for FCoE Traffic Configuration Topology 433
Table 93: Mapping of Default Forwarding Class to Queue, IEEE 802.1p Priority, and Drop Attribute 448
Table 94: FCoE and No-Loss Forwarding Class Configuration in Junos OS Release 12.3 451
Table 95: Default Output Flow Control Profile 456
Table 96: User-Configred Output Flow Control Profile 457
Table 97: Results of Lossless Priority Configuration 461
Table 98: Components of the Configuration Topology for FCoE Traffic That Does Not Use Priority 3 467
Table 99: Components of the Two Lossless FCoE Priorities on an Interface Configuration Topology 476
Table 100: Components of the Two Lossless FCoE Priorities Configuration Topology 486
Table 101: Components of the Lossless FCoE and iSCSI Priorities Configuration Topology 502
Table 102: Components of the IEEE 802.1p Priority Remapping Configuration Topology 524
Table 103: Summary of Differences Between IEEE DCBX and DCBX Version 1.01 535
Table 104: Default IEEE 802.1 Classifiers for Trunk Ports and Tagged-Access Ports (Default Trusted Classifier) 555
Table 105: Default IEEE 802.1 Unicast Classifiers for Access Ports (Default Untrusted Classifier) 555
Table 106: Components of DCBX Application Protocol Exchange Configuration Topology 556

Part 5 Configuring Buffers

Chapter 8 Using Buffers 567

Table 107: Common Packet Buffer Memory on Switches 569
Table 108: Default Dedicated Buffer Allocation to Egress Queues (Based on Default Scheduler) 575
Table 109: Egress Queue Dedicated Buffer Allocation (Example 1) 576
Table 110: Egress Queue Dedicated Buffer Allocation with Another Remainder Queue (Example 2) 577

 Copyright © 2018, Juniper Networks, Inc.

Table 111: QFX5210 Switch Default Shared Ingress Buffer Values (KB) 580
Table 112: QFX5200-48Y Switch Default Shared Ingress Buffer Values (KB) . . 580
Table 113: QFX5110 and QFX5200-32C Switch Default Shared Ingress Buffer Values (KB) 580
Table 114: QFX5100, EX4600, and OCX Series Switch Default Shared Ingress Buffer Values (KB) 581
Table 115: QFX3500 and QFX3600 Switch Default Shared Ingress Buffer Values (KB) 581
Table 116: Default Shared Ingress Buffer Values (Percentage) 581
Table 117: QFX5210 Switch Default Shared Egress Buffer Values (KB) 581
Table 118: QFX5200-48Y Switch Default Shared Egress Buffer Values (KB) . . . 581
Table 119: QFX5110 and QFX5200-32C Switch Default Shared Egress Buffer Values (KB) 582
Table 120: QFX5100, EX4600, and OCX Series Switch Default Shared Egress Buffer Values (KB) 582
Table 121: QFX3500 and QFX3600 Switch Default Shared Egress Buffer Values (KB) 582
Table 122: Default Shared Egress Buffer Values (Percentage) 582
Table 123: Default Ingress and Egress Dedicated Buffer Pool Values KB) per Switch (. 583
Table 124: Default Ingress Shared Buffer Configuration 584
Table 125: Default Egress Shared Buffer Configuration 585
Table 126: Recommended Ingress Shared Buffer Configuration for Networks with Mostly Best-Effort Unicast Traffic 585
Table 127: Recommended Egress Shared Buffer Configuration for Networks with Mostly Best-Effort Unicast Traffic 585
Table 128: Recommended Ingress Shared Buffer Configuration for Networks with Mostly Best-Effort Traffic and Ethernet PAUSE Enabled 585
Table 129: Recommended Egress Shared Buffer Configuration for Networks with Mostly Best-Effort Traffic and Ethernet PAUSE Enabled 586
Table 130: Recommended Ingress Shared Buffer Configuration for Networks with Mostly Best -Effort Multicast Traffic 586
Table 131: Recommended Egress Shared Buffer Configuration for Networks with Mostly Best-Effort Multicast Traffic 586
Table 132: Recommended Ingress Shared Buffer Configuration for Networks with Mostly Lossless Traffic 587
Table 133: Recommended Egress Shared Buffer Configuration for Networks with Mostly Lossless Traffic 587
Table 134: Components of the Recommended Shared Buffer Configuration for Best-Effort Unicast Network Topologies 594
Table 135: Components of the Recommended Shared Buffer Configuration for Best-Effort Network Topologies with Links Enabled for Ethernet PAUSE . . 600
Table 136: Components of the Recommended Shared Buffer Configuration for Multicast Network Topologies 607
Table 137: Components of the Recommended Shared Buffer Configuration for Lossless Network Topologies 613

Copyright © 2018, Juniper Networks, Inc.

Part 6 Configuration Statements and Operational Commands

Chapter 12 Configuration Statements (Node Device Scheduling) 669

Table 138: Default Output Queue Buffer Sizes (QFX10000 Switches) 673
Table 139: Default Output Queue Buffer Sizes (QFX5100, EX4600, QFX3500, and QFX3600 Switches, and QFabric Systems) 674
Table 140: Default Transmit Rates for QFX5100, EX4600, QFX3500, and QFX3600 Switches, and QFabric Systems 697
Table 141: Default Transmit Rates for QFX10000 Switches 698

Chapter 15 Configuration Statements (Buffers) 747

Table 142: Default Egress Shared Buffer Partitioning 749
Table 143: Default Ingress Shared Buffer Partitioning 751
Table 144: Default Output Queue Buffer Sizes (QFX10000 Switches) 755
Table 145: Default Output Queue Buffer Sizes (QFX5100, EX4600, QFX3500, and QFX3600 Switches, and QFabric Systems) 756

Chapter 16 Operational Commands (Basic Concepts) 763

Table 146: Summary of Key CoS Interfaces Output Fields 763
Table 147: show class-of-service Output Fields 765
Table 148: show class-of-service interface Output Fields 771
Table 149: show pfe next-hop Output Fields 803
Table 150: show pfe route Output Fields 809
Table 151: QFX Series, EX4600 switches, and OCX Series show pfe route Hardware Table Output Fields 809

Chapter 17 Operational Commands (Classifiers and Rewrite Rules) 821

Table 152: Summary of Key CoS Classifier Output Fields 822
Table 153: Summary of Key CoS Forwarding Class Output Fields on Switches that Separate Unicast and Multidestination Traffic 823
Table 154: Summary of Key CoS Forwarding Class Output Fields on Switches That Do Not Separate Unicast and Multidestination Traffic 824
Table 155: Summary of Key CoS Rewrite Rule Output Fields 826
Table 156: Summary of Key CoS Value Alias Output Fields 827
Table 157: show class-of-service classifier Output Fields 828
Table 158: show class-of-service code-point-aliases Output Fields 831
Table 159: show class-of-service forwarding-class Output Fields 833
Table 160: show class-of-service forwarding-class-set Output Fields 836
Table 161: show class-of-service forwarding-table classifier Output Fields 842
Table 162: show class-of-service forwarding-table classifier mapping Output Fields 844
Table 163: show class-of-service forwarding-table rewrite-rule Output Fields . . 846
Table 164: show class-of-service forwarding-table rewrite-rule mapping Output Fields 848
Table 165: show class-of-service interface Output Fields 851
Table 166: show class-of-service multi-destination Output Fields 881
Table 167: show class-of-service rewrite-rule Output Fields 883

Chapter 18 Operational Commands (Node Device Scheduling) 885

Table 168: Summary of Key CoS Scheduler Maps Output Fields 885
Table 169: show class-of-service drop-profile Output Fields 887

Copyright © 2018, Juniper Networks, Inc.

Table 170: show class-of-service forwarding-table drop-profile Output Fields 895
Table 171: show class-of-service forwarding-table scheduler-map Output Fields 897
Table 172: show class-of-service interface Output Fields 900
Table 173: show class-of-service scheduler-map Output Fields 930
Table 174: show class-of-service traffic-control-profile Output Fields 934
Table 175: Layer 2 Overhead and Transmitted Packets or Byte Counts 939
Table 176: show interfaces queue Output Fields 942
Table 177: Byte Count by Interface Hardware 946

Chapter 19 Operational Commands (Interconnect Device Scheduling) 981

Table 178: show class-of-service scheduler-map-fcset Output Fields 982

Chapter 20 Operational Commands (Data Center Bridging and Lossless Transport) 985

Table 179: show class-of-service congestion-notification Output Fields 987
Table 180: show dcbx output fields 990
Table 181: show dcbx neighbors Output Fields 992

Chapter 21 Operational Commands (Buffers) 1019

Table 182: show class-of-service shared-buffer Output Fields 1021

Copyright © 2018, Juniper Networks, Inc.

About the Documentation

- Documentation and Release Notes on page xxvii
- Using the Examples in This Manual on page xxvii
- Documentation Conventions on page xxix
- Documentation Feedback on page xxxi
- Requesting Technical Support on page xxxi

Documentation and Release Notes

To obtain the most current version of all Juniper Networks® technical documentation, see the product documentation page on the Juniper Networks website at https://www.juniper.net/documentation/.

If the information in the latest release notes differs from the information in the documentation, follow the product Release Notes.

Juniper Networks Books publishes books by Juniper Networks engineers and subject matter experts. These books go beyond the technical documentation to explore the nuances of network architecture, deployment, and administration. The current list can be viewed at https://www.juniper.net/books.

Using the Examples in This Manual

If you want to use the examples in this manual, you can use the **load merge** or the **load merge relative** command. These commands cause the software to merge the incoming configuration into the current candidate configuration. The example does not become active until you commit the candidate configuration.

If the example configuration contains the top level of the hierarchy (or multiple hierarchies), the example is a *full example*. In this case, use the **load merge** command.

If the example configuration does not start at the top level of the hierarchy, the example is a *snippet*. In this case, use the **load merge relative** command. These procedures are described in the following sections.

Merging a Full Example

To merge a full example, follow these steps:

1. From the HTML or PDF version of the manual, copy a configuration example into a text file, save the file with a name, and copy the file to a directory on your routing platform.

   For example, copy the following configuration to a file and name the file **ex-script.conf**. Copy the **ex-script.conf** file to the **/var/tmp** directory on your routing platform.

   ```
   system {
     scripts {
       commit {
         file ex-script.xsl;
       }
     }
   }
   interfaces {
     fxp0 {
       disable;
       unit 0 {
         family inet {
           address 10.0.0.1/24;
         }
       }
     }
   }
   ```

2. Merge the contents of the file into your routing platform configuration by issuing the **load merge** configuration mode command:

   ```
   [edit]
   user@host# load merge /var/tmp/ex-script.conf
   load complete
   ```

Merging a Snippet

To merge a snippet, follow these steps:

1. From the HTML or PDF version of the manual, copy a configuration snippet into a text file, save the file with a name, and copy the file to a directory on your routing platform.

   For example, copy the following snippet to a file and name the file **ex-script-snippet.conf**. Copy the **ex-script-snippet.conf** file to the **/var/tmp** directory on your routing platform.

   ```
   commit {
     file ex-script-snippet.xsl; }
   ```


Copyright © 2018, Juniper Networks, Inc.

2. Move to the hierarchy level that is relevant for this snippet by issuing the following configuration mode command:

```
[edit]
user@host# edit system scripts
[edit system scripts]
```

3. Merge the contents of the file into your routing platform configuration by issuing the **load merge relative** configuration mode command:

```
[edit system scripts]
user@host# load merge relative /var/tmp/ex-script-snippet.conf
load complete
```

For more information about the **load** command, see CLI Explorer.

Documentation Conventions

Table 1 on page xxix defines notice icons used in this guide.

Table 1: Notice Icons

Icon	Meaning	Description
	Informational note	Indicates important features or instructions.
	Caution	Indicates a situation that might result in loss of data or hardware damage.
	Warning	Alerts you to the risk of personal injury or death.
	Laser warning	Alerts you to the risk of personal injury from a laser.
	Tip	Indicates helpful information.
	Best practice	Alerts you to a recommended use or implementation.

Table 2 on page xxx defines the text and syntax conventions used in this guide.

Table 2: Text and Syntax Conventions

Convention	Description	Examples
Bold text like this	Represents text that you type.	To enter configuration mode, type the **configure** command: user@host> **configure**
`Fixed-width text like this`	Represents output that appears on the terminal screen.	`user@host>` **show chassis alarms** `No alarms currently active`
Italic text like this	• Introduces or emphasizes important new terms. • Identifies guide names. • Identifies RFC and Internet draft titles.	• A policy *term* is a named structure that defines match conditions and actions. • *Junos OS CLI User Guide* • RFC 1997, *BGP Communities Attribute*
Italic text like this	Represents variables (options for which you substitute a value) in commands or configuration statements.	Configure the machine's domain name: [edit] root@# **set system domain-name** *domain-name*
Text like this	Represents names of configuration statements, commands, files, and directories; configuration hierarchy levels; or labels on routing platform components.	• To configure a stub area, include the **stub** statement at the **[edit protocols ospf area area-id]** hierarchy level. • The console port is labeled **CONSOLE**.
< > (angle brackets)	Encloses optional keywords or variables.	**stub <default-metric** *metric***>;**
| (pipe symbol)	Indicates a choice between the mutually exclusive keywords or variables on either side of the symbol. The set of choices is often enclosed in parentheses for clarity.	**broadcast | multicast** (***string1* | *string2* | *string3***)
# (pound sign)	Indicates a comment specified on the same line as the configuration statement to which it applies.	**rsvp { # Required for dynamic MPLS only**
[ ] (square brackets)	Encloses a variable for which you can substitute one or more values.	**community name members [** ***community-ids*** **]**

Indention and braces ({ })	Identifies a level in the configuration hierarchy.	[edit]
		routing-options {
		static {
		route default {
		nexthop *address*;
		retain;
		}
		}
		}

; (semicolon)	Identifies a leaf statement at a configuration hierarchy level.	

Copyright © 2018, Juniper Networks, Inc.

Table 2: Text and Syntax Conventions (continued)

Convention	Description	Examples
GUI Conventions		
Bold text like this	Represents graphical user interface (GUI) items you click or select.	• In the Logical Interfaces box, select **All Interfaces**. • To cancel the configuration, click **Cancel**.
> (bold right angle bracket)	Separates levels in a hierarchy of menu selections.	In the configuration editor hierarchy, select **Protocols>Ospf**.

Documentation Feedback

We encourage you to provide feedback so that we can improve our documentation. You can use either of the following methods:

- Online feedback system—Click TechLibrary Feedback, on the lower right of any page on the Juniper Networks TechLibrary site, and do one of the following:

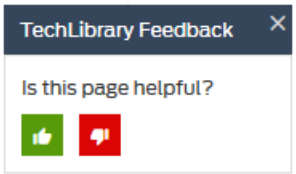

  - Click the thumbs-up icon if the information on the page was helpful to you.
  - Click the thumbs-down icon if the information on the page was not helpful to you or if you have suggestions for improvement, and use the pop-up form to provide feedback.

- E-mail—Send your comments to **techpubs-comments@juniper.net**. Include the document or topic name, URL or page number, and software version (if applicable).

Requesting Technical Support

Technical product support is available through the Juniper Networks Technical Assistance Center (JTAC). If you are a customer with an active J-Care or Partner Support Service support contract, or are covered under warranty, and need post-sales technical support, you can access our tools and resources online or open a case with JTAC.

- JTAC policies—For a complete understanding of our JTAC procedures and policies, review the *JTAC User Guide* located at https://www.juniper.net/us/en/local/pdf/resource-guides/7100059-en.pdf.

- Product warranties—For product warranty information, visit https://www.juniper.net/support/warranty/.

Copyright © 2018, Juniper Networks, Inc.

- JTAC hours of operation—The JTAC centers have resources available 24 hours a day, 7 days a week, 365 days a year.

Self-Help Online Tools and Resources

For quick and easy problem resolution, Juniper Networks has designed an online self-service portal called the Customer Support Center (CSC) that provides you with the following features:

- Find CSC offerings: https://www.juniper.net/customers/support/
- Search for known bugs: https://prsearch.juniper.net/
- Find product documentation: https://www.juniper.net/documentation/
- Find solutions and answer questions using our Knowledge Base: https://kb.juniper.net/
- Download the latest versions of software and review release notes: https://www.juniper.net/customers/csc/software/
- Search technical bulletins for relevant hardware and software notifications: https://kb.juniper.net/InfoCenter/
- Join and participate in the Juniper Networks Community Forum: https://www.juniper.net/company/communities/
- Open a case online in the CSC Case Management tool: https://www.juniper.net/cm/

To verify service entitlement by product serial number, use our Serial Number Entitlement (SNE) Tool: https://entitlementsearch.juniper.net/entitlementsearch/

Opening a Case with JTAC

You can open a case with JTAC on the Web or by telephone.

- Use the Case Management tool in the CSC at https://www.juniper.net/cm/.
- Call 1-888-314-JTAC (1-888-314-5822 toll-free in the USA, Canada, and Mexico).

For international or direct-dial options in countries without toll-free numbers, see https://www.juniper.net/support/requesting-support.html.

Copyright © 2018, Juniper Networks, Inc.

PART 1

CoS Overview

- Overview on page 3
- Basic Concepts on page 13
- CoS Upgrade Requirements and Feature Change Compatibility on page 39

Copyright © 2018, Juniper Networks, Inc.

Copyright © 2018, Juniper Networks, Inc.

CHAPTER 1

Overview

- Overview of Junos OS CoS on page 4
- Overview of Policers on page 6

Copyright © 2018, Juniper Networks, Inc.

Overview of Junos OS CoS

When a network experiences congestion and delay, some packets must be dropped. Junos OS class of service (CoS) enables you to divide traffic into classes and set various levels of throughput and packet loss when congestion occurs. You have greater control over packet loss because you can configure rules tailored to your needs.

You can configure CoS features to provide multiple classes of service for different applications. CoS also allows you to rewrite the Differentiated Services code point (DSCP) or IEEE 802.1p code-point bits of packets leaving an interface, thus allowing you to tailor packets for the network requirements of the remote peers.

CoS provides multiple classes of service for different applications. You can configure multiple forwarding classes for transmitting packets, define which packets are placed into each output queue, schedule the transmission service level for each queue, and manage congestion using a weighted random early detection (WRED) algorithm.

In designing CoS applications, you must carefully consider your service needs, and you must thoroughly plan and design your CoS configuration to ensure consistency and interoperability across all platforms in a CoS domain.

Because CoS is implemented in hardware rather than in software, you can experiment with and deploy CoS features without affecting packet forwarding and switching performance.

NOTE: **CoS policies can be enabled or disabled on each switch interface. Also, each physical and logical interface on the switch can have associated custom CoS rules.**

When you change or when you deactivate and then reactivate the class-of-service configuration, the system experiences packet drops because the system momentarily blocks traffic to change the mapping of incoming traffic to input queues.

This topic describes:

- CoS Standards on page 4
- How Junos OS CoS Works on page 5
- Default CoS Behavior on page 6

CoS Standards

The following RFCs define the standards for CoS capabilities:

- RFC 2474, *Definition of the Differentiated Services Field in the IPv4 and IPv6 Headers*
- RFC 2597, *Assured Forwarding PHB Group*
- RFC 2598, *An Expedited Forwarding PHB*

Copyright © 2018, Juniper Networks, Inc.

- RFC 2698, *A Two Rate Three Color Marker*
- RFC 3168, *The Addition of Explicit Congestion Notification (ECN) to IP*

The following data center bridging (DCB) standards are also supported to provide the CoS (and other characteristics) that Fibre Channel over Ethernet (FCoE) requires for transmitting storage traffic over an Ethernet network:

- IEEE 802.1Qbb, priority-based flow control (PFC)
- IEEE 802.1Qaz, enhanced transmission selection (ETS)
- IEEE 802.1AB (LLDP) extension called Data Center Bridging Capability Exchange Protocol (DCBX)

NOTE: OCX Series switches and NFX250 Network Services platforms do not support PFC and DCBX.

Juniper Networks QFX10000 switches support both enhanced transmission selection (ETS) hierarchical port scheduling and direct port scheduling.

How Junos OS CoS Works

Junos OS CoS works by examining traffic entering the edge of your network. The switch classifies traffic into defined service groups to provide the special treatment of traffic across the network. For example, you can send voice traffic across certain links and data traffic across other links. In addition, the data traffic streams can be serviced differently along the network path to ensure that higher-paying customers receive better service. As the traffic leaves the network at the far edge, you can reclassify the traffic to meet the policies of the targeted peer by rewriting the DSCP or IEEE 802.1 code-point bits.

To support CoS, you must configure each switch in the network. Generally, each switch examines the packets that enter it to determine their CoS settings. These settings dictate which packets are transmitted first to the next downstream switch. Switches at the edges of the network might be required to alter the CoS settings of the packets that enter the network to classify the packets into the appropriate service groups.

In Figure 1 on page 6, Switch A is receiving traffic. As each packet enters, Switch A examines the packet's current CoS settings and classifies the traffic into one of the groupings defined on the switch. This definition allows Switch A to prioritize its resources for servicing the traffic streams it receives. Switch A might alter the CoS settings (forwarding class and loss priority) of the packets to better match the defined traffic groups.

When Switch B receives the packets, it examines the CoS settings, determines the appropriate traffic groups, and processes the packet according to those settings. It then transmits the packets to Switch C, which performs the same actions. Switch D also examines the packets and determines the appropriate groups. Because Switch D sits at the far end of the network, it can reclassify (rewrite) the CoS code-point bits of the packets before transmitting them.

Copyright © 2018, Juniper Networks, Inc.

Figure 1: Packet Flow Across the Network

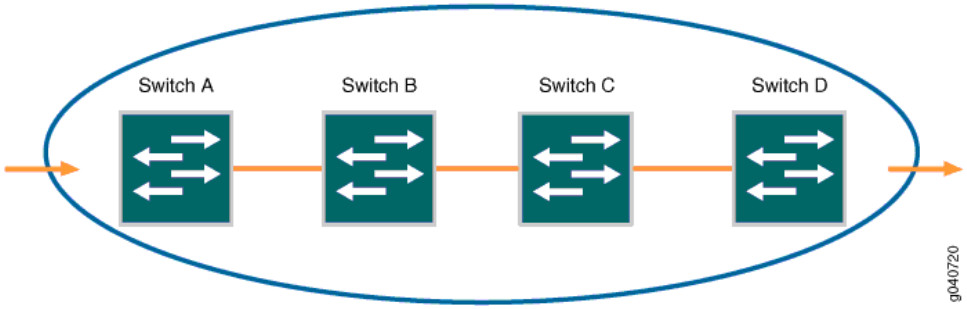

Default CoS Behavior

If you do not configure CoS settings, the software performs some CoS functions to ensure that the system forwards traffic and protocol packets with minimum delay when the network is experiencing congestion. Some CoS settings, such as classifiers, are automatically applied to each logical interface that you configure. Other settings, such as rewrite rules, are applied only if you explicitly associate them with an interface.

Related Documentation

- Overview of Policers on page 6
- Understanding Junos CoS Components on page 17
- Understanding CoS Packet Flow on page 25
- Understanding CoS Hierarchical Port Scheduling (ETS) on page 192

Overview of Policers

A switch polices traffic by limiting the input or output transmission rate of a class of traffic according to user-defined criteria. Policing (or rate-limiting) traffic allows you to control the maximum rate of traffic sent or received on an interface and to provide multiple priority levels or classes of service.

Policing is also an important component of firewall filters. You can achieve policing by including policers in firewall filter configurations.

- Policer Overview on page 7
- Policer Types on page 7
- Policer Actions on page 8
- Policer Colors on page 9
- Filter-Specific Policers on page 9
- Suggested Naming Convention for Policers on page 10
- Policer Counters on page 10
- Policer Algorithms on page 10
- How Many Policers Are Supported? on page 11
- Policers Can Limit Egress Firewall Filters on page 11

Copyright © 2018, Juniper Networks, Inc.

Policer Overview

You use policers to apply limits to traffic flow and set consequences for packets that exceed these limits—usually applying a higher loss priority—so that if packets encounter downstream congestion, they can be discarded first. Policers apply only to unicast packets.

Policers provide two functions: metering and marking. A policer meters (measures) each packet against traffic rates and burst sizes that you configure. It then passes the packet and the metering result to the marker, which assigns a packet loss priority that corresponds to the metering result. Figure 2 on page 7 illustrates this process.

Figure 2: Flow of Tricolor Marking Policer Operation

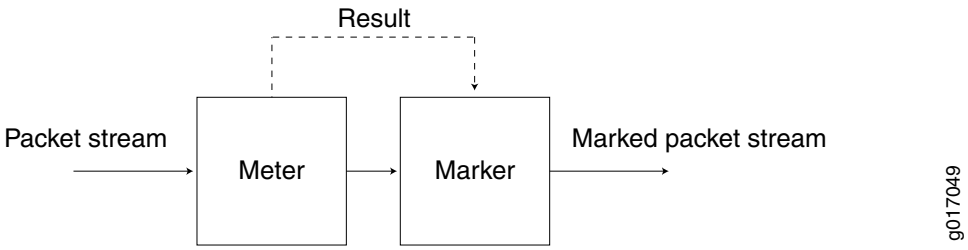

After you name and configure a policer, you can use it by specifying it as an action in one or more firewall filters.

Policer Types

A switch supports three types of policers:

- Single-rate two-color marker—A two-color policer (or “policer” when used without qualification) meters the traffic stream and classifies packets into two categories of packet loss priority (PLP) according to a configured bandwidth and burst-size limit. You can mark packets that exceed the bandwidth and burst-size limit with a specified PLP or simply discard them.

  You can specify this type of policer in an ingress or egress firewall.

  NOTE: **A two-color policer is most useful for metering traffic at the port (physical interface) level.**

- Single-rate three-color marker—This type of policer is defined in RFC 2697, *A Single Rate Three Color Marker*, as part of an assured forwarding (AF) per-hop-behavior (PHB) classification system for a Differentiated Services (DiffServ) environment. This type of policer meters traffic based on one rate—the configured committed information rate (CIR) as well as the committed burst size (CBS) and the excess burst size (EBS). The CIR specifies the average rate at which bits are admitted to the switch. The CBS specifies the usual burst size in bytes and the EBS specifies the maximum burst size in bytes. The EBS must be greater than or equal to the CBS, and neither can be 0.

  You can specify this type of policer in an ingress or egress firewall.

Copyright © 2018, Juniper Networks, Inc.

NOTE: A single-rate three-color marker (TCM) is most useful when a service is structured according to packet length and not peak arrival rate.

- Two-rate three-color marker—This type of policer is defined in RFC 2698, *A Two Rate Three Color Marker*, as part of an assured forwarding per-hop-behavior classification system for a Differentiated Services environment. This type of policer meters traffic based on two rates—the CIR and peak information rate (PIR) along with their associated burst sizes, the CBS and peak burst size (PBS). The PIR specifies the maximum rate at which bits are admitted to the network and must be greater than or equal to the CIR.

  You can specify this type of policer in an ingress or egress firewall.

  NOTE: A two-rate three-color policer is most useful when a service is structured according to arrival rates and not necessarily packet length.

See Table 3 on page 8 for information about how metering results are applied for each of these policer types.

Policer Actions

Policer actions are implicit or explicit and vary by policer type. *Implicit* means that Junos OS assigns the loss priority automatically. Table 3 on page 8 describes the policer actions.

Table 3: Policer Actions

Policer	Marking	Implicit Action	Configurable Action
Single-rate two-color	Green (conforming)	Assign low loss priority	None
	Red (nonconforming)	None	Discard
Single-rate three-color	Green (conforming)	Assign low loss priority	None
	Yellow (above the CIR and CBS)	Assign medium-high loss priority	None
	Red (above the EBS)	Assign high loss priority	Discard

Copyright © 2018, Juniper Networks, Inc.

Table 3: Policer Actions (continued)

Policer	Marking	Implicit Action	Configurable Action
Two-rate three-color	Green (conforming)	Assign low loss priority	None
	Yellow (above the CIR and CBS)	Assign medium-high loss priority	None
	Red (above the PIR and PBS)	Assign high loss priority	Discard

NOTE: **If you specify a policer in an egress firewall filter, the only supported action is discard.**

Policer Colors

Single-rate and two-rate three-color policers can operate in two modes:

- Color-blind—In color-blind mode, the three-color policer assumes that all packets examined have not been previously marked or metered. In other words, the three-color policer is “blind” to any previous coloring a packet might have had.
- Color-aware—In color-aware mode, the three-color policer assumes that all packets examined have been previously marked or metered. In other words, the three-color policer is “aware” of the previous coloring a packet might have had. In color-aware mode, the three-color policer can increase the PLP of a packet but cannot decrease it. For example, if a color-aware three-color policer meters a packet with a medium PLP marking, it can raise the PLP level to high but cannot reduce the PLP level to low.

Filter-Specific Policers

You can configure policers to be filter-specific, which means that Junos OS creates only one policer instance regardless of how many times the policer is referenced. When you do this on some QFX switches, rate limiting is applied in aggregate, so if you configure a policer to discard traffic that exceeds 1 Gbps and reference that policer in three different terms, the total bandwidth allowed by the filter is 1 Gbps. However, the behavior of a filter-specific policer is affected by how the firewall filter terms that reference the policer are stored in TCAM. If you create a filter-specific policer and reference it in multiple firewall filter terms, the policer allows more traffic than expected if the terms are stored in different TCAM slices. For example, if you configure a policer to discard traffic that exceeds 1 Gbps and reference that policer in three different terms that are stored in three separate memory slices, the total bandwidth allowed by the filter is 3 Gbps, not 1 Gbps. (This behavior does not occur in QFX10000 switches.)

To prevent this unexpected behavior from occurring, use the information about TCAM slices presented in *Planning the Number of Firewall Filters to Create* to organize your

Copyright © 2018, Juniper Networks, Inc.

configuration file so that all the firewall filter terms that reference a given filter-specific policer are stored in the same TCAM slice.

Suggested Naming Convention for Policers

We recommend that you use the naming convention ***policertypeTCM#-color type*** when configuring three-color policers and ***policer#*** when configuring two-color policers. TCM stands for three-color marker. Because policers can be numerous and must be applied correctly to work, a simple naming convention makes it easier to apply the policers properly. For example, the first single-rate, color-aware three-color policer configured would be named **srTCM1-ca**. The second two-rate, color-blind three-color configured would be named **trTCM2-cb**. The elements of this naming convention are explained below:

- sr (single-rate)
- tr (two-rate)
- TCM (tricolor marking)
- 1 or 2 (number of marker)
- ca (color-aware)
- cb (color-blind)

Policer Counters

On some QFX switches, each policer that you configure includes an implicit counter that counts the number of packets that exceed the rate limits that are specified for the policer. If you use the same policer in multiple terms—either within the same filter or in different filters—the implicit counter counts all the packets that are policed in all of these terms and provides the total amount. (This does not apply to QFX10000 switches.) If you want to obtain separate packet counts for each term on an affected switch, use these options:

- Configure a unique policer for each term.
- Configure only one policer, but use a unique, explicit counter in each term.

Policer Algorithms

Policing uses the *token-bucket algorithm*, which enforces a limit on average bandwidth while allowing bursts up to a specified maximum value. It offers more flexibility than the *leaky bucket algorithm* in allowing a certain amount of bursty traffic before it starts discarding packets.

NOTE: In an environment of light bursty traffic, QFX5200 might not replicate all multicast packets to two or more downstream interfaces. This occurs only at a line rate burst—if traffic is consistent, the issue does not occur. In addition, the issue occurs only when packet size increases beyond 6k in a one gigabit traffic flow.

Copyright © 2018, Juniper Networks, Inc.

How Many Policers Are Supported?

QFX10000 switches support 8K policers (all policer types). QFX5100 and QFX5200 switches support 1535 ingress policers and 1024 egress policers (assuming one policer per firewall filter term). QFX5110 switches support 6144 ingress policers and 1024 egress policers (assuming one policer per firewall filter term).

QFX3500 and QFX3600 standalone switches and QFabric Node devices support the following numbers of policers (assuming one policer per firewall filter term):

- Two-color policers used in ingress firewall filters: 767
- Three-color policers used in ingress firewall filters: 767
- Two-color policers used in egress firewall filters: 1022
- Three-color policers used in egress firewall filters: 512

Policers Can Limit Egress Firewall Filters

On some switches, the number of egress policers that you configure can affect the total number of allowed egress firewall filters. (This issue does not affect QFX10000 switches.) On the affected switches, every policer has two implicit counters that consume two entries in a 1024-entry TCAM that is used for counters, including counters that are configured as action modifiers in firewall filter terms. (Policers consume two entries because one is used for green packets and one is used for nongreen packets regardless of policer type.) If the TCAM becomes full, you cannot commit any more egress firewall filters that have terms with counters. For example, if you configure and commit 512 egress policers (two-color, three-color, or a combination of both policer types), all of the memory entries for counters are used up. If later in your configuration file you insert additional egress firewall filters with terms that also include counters, *none* of the terms in those filters are committed because there is no available memory space for the counters.

Here are some additional examples:

- Assume that you configure egress filters that include a total of 512 policers and no counters. Later in your configuration file you include another egress filter with 10 terms, 1 of which has a counter action modifier. None of the terms in this filter are committed because there is not enough TCAM space for the counter.
- Assume that you configure egress filters that include a total of 500 policers, so 1000 TCAM entries are occupied. Later in your configuration file you include the following two egress filters:
  - Filter A with 20 terms and 20 counters. All the terms in this filter are committed because there is enough TCAM space for all the counters.
  - Filter B comes after Filter A and has five terms and five counters. *None* of the terms in this filter are committed because there is not enough memory space for *all* the counters. (Five TCAM entries are required but only four are available.)

You can prevent this problem by ensuring that egress firewall filter terms with counter actions are placed earlier in your configuration file than terms that include policers. In

this circumstance, Junos OS commits policers even if there is not enough TCAM space for the implicit counters. For example, assume the following:

- You have 1024 egress firewall filter terms with counter actions.
- Later in your configuration file you have an egress filter with 10 terms. None of the terms have counters but one has a policer action modifier.

You can successfully commit the filter with 10 terms even though there is not enough TCAM space for the implicit counters of the policer. The policer is committed without the counters.

Related Documentation

- *Understanding Color-Blind Mode for Single-Rate Tricolor Marking*
- *Understanding Color-Blind Mode for Two-Rate Tricolor Marking*
- *Understanding Color-Aware Mode for Single-Rate Tricolor Marking*
- *Understanding Color-Aware Mode for Two-Rate Tricolor Marking*
- *Configuring Two-Color and Three-Color Policers to Control Traffic Rates*

Copyright © 2018, Juniper Networks, Inc.

CHAPTER 2

Basic Concepts

- Configuring CoS on page 13
- Understanding Junos CoS Components on page 17
- Assigning CoS Components to Interfaces on page 23
- Understanding CoS Packet Flow on page 25
- Understanding Default CoS Settings on page 27
- CoS Inputs and Outputs Overview on page 38

Configuring CoS

The traffic management class-of-service topics describe how to configure the Junos OS class-of-service (CoS) components. Junos CoS provides a flexible set of tools that enable you to fine tune control over the traffic on your network.

- Define classifiers that classify incoming traffic into forwarding classes to place traffic in groups for transmission.
- Map forwarding classes to output queues to define the type of traffic on each output queue.
- Configure schedulers for each output queue to control the service level (priority, bandwidth characteristics) of each type of traffic.
- Provide different service levels for the same forwarding classes on different interfaces.
- On switches that support data center bridging standards, configure lossless transport across the Ethernet network using priority-based flow control (PFC), Data Center Bridging Exchange protocol (DCBX), and enhanced transmission selection (ETS) hierarchical scheduling (OCX Series switches and NFX250 Network Services platform do not support lossless transport, PFC, and DCBX).
- Configure various CoS components individually or in combination to define CoS services.

NOTE: When you change the CoS configuration or when you deactivate and then reactivate the CoS configuration, the system experiences packet drops because the system momentarily blocks traffic to change the mapping of incoming traffic to input queues.

Table 4 on page 14 lists the primary CoS configuration tasks by platform and provides links to those tasks.

NOTE: Links to features that are not supported on the platform for which you are looking up information might not be functional.

Table 4: CoS Configuration Tasks

CoS Configuration Task	Platforms Supported	Links

Basic CoS Configuration:
• Configure code-point aliases to assign a name to a pattern of code-point bits that you can use instead of the bit pattern when you configure CoS components such as classifiers and rewrite rules
• Configure classifiers and multidestination classifiers
  ◦ Set the forwarding class and loss priority of a packet based on the incoming CoS value and assign packets to output queues based on the associated forwarding class
  ◦ Change the host default output queue and mapping of DSCP bits used in the type of service (ToS) field
• Configure forwarding classes
• Configure rewrite rules to alter code point bit values in outgoing packets on the outbound interfaces of a switch so that the CoS treatment matches the policies of a targeted peer
• Configure Ethernet PAUSE flow control, a congestion relief feature that provides link-level flow control for all traffic on a full-duplex Ethernet link, including those that belong to Ethernet link aggregated (LAG) interfaces. On any particular interface, symmetric and asymmetric flow control are mutually exclusive.
• Assign the following CoS components to physical or logical interfaces:
  ◦ Classifiers
  ◦ Congestion notification profiles
  ◦ Forwarding classes
  ◦ Forwarding class sets
  ◦ Output traffic control profiles
  ◦ Port schedulers
  ◦ Rewrite rules
	• QFX3500
	• QFX3600
	• EX4600
	• NFX250
	• QFX5100
	• QFX5200
	• QFX5210
	• QFX10000
	• OCX1100 switches
	• QFabric systems
		• Defining CoS Code-Point Aliases on page 103
		• (QFX10000 only) *Example: Configuring Classifiers*
		• (Except QFX10000) "Defining CoS BA Classifiers (DSCP, DSCP IPv6, IEEE 802.1p)" on page 69
		• (Except NFX250 and QFX10000) "Example: Configuring Multidestination (Multicast, Broadcast, DLF) Classifiers" on page 75
		• Changing the Host Outbound Traffic Default Queue Mapping on page 126
		• Example: Configuring Forwarding Classes on page 113
		• Defining CoS Rewrite Rules on page 130
		• (Except NFX250) "Enabling and Disabling CoS Symmetric Ethernet PAUSE Flow Control" on page 426
		• (Except NFX250 and OCX1100) "Configuring CoS Asymmetric Ethernet PAUSE Flow Control" on page 427
		• Assigning CoS Components to Interfaces on page 23

Copyright © 2018, Juniper Networks, Inc.

Table 4: CoS Configuration Tasks (continued)

CoS Configuration Task	Platforms Supported	Links
Configure Weighted random early detection (WRED) drop profiles that define the drop probability of packets of different packet loss probabilities (PLPs) as the output queue fills: • Configure WRED drop profiles where you associate WRED drop profiles with loss priorities in a scheduler. When you map the scheduler to a forwarding class (queue), you apply the interpolated drop profile to traffic of the specified loss priority on that queue. • Configure drop profile maps that map a drop profile to a packet loss priority, and associate the drop profile and packet loss priority with a scheduler • Configure explicit congestion notification (ECN) to enable end-to-end congestion notification between two endpoints on TCP/IP based networks. Apply WRED drop profiles to forwarding classes to control how the switch marks ECN-capable packets.	• QFX3500 • QFX3600 • EX4600 • QFX5100 • QFX5200 • QFX5210 • QFX10000 • OCX1100 switches • QFabric systems	• Example: Configuring WRED Drop Profiles on page 252 • Example: Configuring Drop Profile Maps on page 258 • *Example: Configuring ECN*
Configure queue schedulers and the bandwidth scheduling priority of individual queues. Schedulers define the CoS properties of output queues (output queues are mapped to forwarding classes, and classifiers map traffic into forwarding classes based on IEEE 802.1p or DSCP code points). Queue scheduling works with priority group scheduling to create a two-tier hierarchical scheduler. CoS scheduling properties include the amount of interface bandwidth assigned to the queue, the priority of the queue, whether explicit congestion notification (ECN) is enabled on the queue, and the WRED packet drop profiles associated with the queue.	• QFX3500 • QFX3600 • EX4600 • NFX250 • QFX5100 • QFX5200 • QFX5210 • QFX10000 • OCX1100 switches • QFabric systems	• (Except QFX10000) "Example: Configuring Queue Schedulers" on page 169 • Example: Configuring Queue Scheduling Priority on page 178 • (QFX10000 only) *Example: Configuring Queue Schedulers for Port Scheduling*
Configure traffic control profiles to define the output bandwidth and scheduling characteristics of forwarding class sets (priority groups). The forwarding classes (queues) mapped to a forwarding class set share the bandwidth resources that you configure in the traffic control profile.	• QFX3500 • QFX3600 • EX4600 • NFX250 • QFX5100 • QFX5200 • QFX5210 • QFX10000 • OCX1100 switches • QFabric systems	• (Except NFX250) "Defining CoS Traffic Control Profiles (Priority Group Scheduling)" on page 187 • (Except NFX250) "Example: Configuring Traffic Control Profiles (Priority Group Scheduling)" on page 188 • Example: Configuring Minimum Guaranteed Output Bandwidth on page 229 • (Except NFX250) "Example: Configuring Maximum Output Bandwidth" on page 236

Copyright © 2018, Juniper Networks, Inc.

Table 4: CoS Configuration Tasks (continued)

CoS Configuration Task	Platforms Supported	Links
Configure enhanced transmission selection (ETS) and forwarding class sets, and disable the ETS recommendation TLV. Hierarchical port scheduling, the Junos OS implementation of ETS, enables you to group priorities that require similar CoS treatment into priority groups. You define the port bandwidth resources for a priority group, and you define the amount of the priority group's resources that each priority in the group can use.	• QFX3500 • QFX3600 • EX4600 • QFX5100 • OCX1100 switches • QFX10000 • QFabric systems	• Example: Configuring Forwarding Class Sets on page 120 • Example: Configuring CoS Hierarchical Port Scheduling (ETS) on page 198 • (Except OCX1100)"Disabling the ETS Recommendation TLV" on page 413
Configure Data Center Bridging Capability Exchange protocol (DCBX), which discovers the data center bridging (DCB) capabilities of peers by exchanging feature configuration information and is an extension of the Link Layer Discovery Protocol (LLDP) • Configure the DCBX mode that an interface uses to communicate with the connected peer • Configure DCBX autonegotiation on a per-interface basis for each supported feature or application • Define each application for which you want DCBX to exchange application protocol information • Map applications to IEEE 802.1p code points • Apply an application map to a DCBX interface	• QFX3500 • QFX3600 • EX4600 • QFX5100 • QFX5200 • QFX5210 • QFX10000 • QFabric systems	• Example: Configuring DCBX Application Protocol TLV Exchange on page 553 • Configuring the DCBX Mode on page 542 • Configuring DCBX Autonegotiation on page 543 • Defining an Application for DCBX Application Protocol TLV Exchange on page 550 • Configuring an Application Map for DCBX Application Protocol TLV Exchange on page 551 • Applying an Application Map to an Interface for DCBX Application Protocol TLV Exchange on page 552

Copyright © 2018, Juniper Networks, Inc.

Table 4: CoS Configuration Tasks (continued)

CoS Configuration Task	Platforms Supported	Links
Configure CoS for FCoE: • Configure priority-based flow control (PFC) to divide traffic on one physical link into eight priorities • Configure a congestion notification profile (CNP) that enables priority-based flow control (PFC) on specified IEEE 802.1p priorities • Configure Multichassis link aggregation groups (MC-LAGs) to provide redundancy and load balancing between two switches • Configure two or more lossless forwarding classes and map them to different priorities • Configure lossless FCoE transport if your network uses a different priority than 3 • Configure multiple lossless FCoE priorities on a converged Ethernet network • If the FCoE network uses a different priority than priority 3 for FCoE traffic, configure a rewrite value to remap incoming traffic from the FC SAN to that priority after the interface encapsulates the FC packets in Ethernet • Configure lossless priorities for multiple types of traffic, such as FCoE and iSCSI	• QFX3500 • QFX3600 • EX4600 • QFX5100 • QFX5200 • QFX5210 • QFX10000 • QFabric systems	• Example: Configuring CoS PFC for FCoE Traffic on page 432 • *Example: Configuring CoS for FCoE Transit Switch Traffic Across an MC-LAG* • Configuring CoS PFC (Congestion Notification Profiles) on page 429 • (QFX3500 and QFabric only) "Example: Configuring IEEE 802.1p Priority Remapping on an FCoE-FC Gateway" on page 522 • Example: Configuring Two or More Lossless FCoE IEEE 802.1p Priorities on Different FCoE Transit Switch Interfaces on page 484 • Example: Configuring Lossless FCoE Traffic When the Converged Ethernet Network Does Not Use IEEE 802.1p Priority 3 for FCoE Traffic (FCoE Transit Switch) on page 465 • Example: Configuring Two or More Lossless FCoE Priorities on the Same FCoE Transit Switch Interface on page 474 • (QFX3500, NFX250, and QFabric only) "Configuring CoS Fixed Classifier Rewrite Values for Native FC Interfaces (NP_Ports)" on page 132 • Example: Configuring Lossless IEEE 802.1p Priorities on Ethernet Interfaces for Multiple Applications (FCoE and iSCSI) on page 500

Understanding Junos CoS Components

This topic describes the Junos OS class-of-service (CoS) components:

- Code-Point Aliases on page 18
- Policers on page 18
- Classifiers on page 18
- Forwarding Classes on page 19
- Forwarding Class Sets on page 20
- Flow Control (Ethernet PAUSE, PFC, and ECN) on page 20
- WRED Profiles and Tail Drop on page 21
- Schedulers on page 22
- Rewrite Rules on page 22

Copyright © 2018, Juniper Networks, Inc.

Code-Point Aliases

A *code-point alias* assigns a name to a pattern of code-point bits. You can use this name instead of the bit pattern when you configure other CoS components such as classifiers and rewrite rules.

Policers

Policers limit traffic of a certain class to a specified bandwidth and burst size. Packets exceeding the policer limits can be discarded, or can be assigned to a different forwarding class, a different loss priority, or both. You define policers with filters that you can associate with input interfaces.

Classifiers

Packet classification associates incoming packets with a particular CoS servicing level. In Junos OS, *classifiers* associate packets with a forwarding class and loss priority and assign packets to output queues based on the associated forwarding class. Junos OS supports two general types of classifiers:

- Behavior aggregate (BA) or CoS value traffic classifiers—Examine the CoS value in the packet header. The value in this single field determines the CoS settings applied to the packet. BA classifiers allow you to set the forwarding class and loss priority of a packet based on the Differentiated Services code point (DSCP) value, IEEE 802.1p value, or MPLS EXP value.

  NOTE: **OCX Series switches and NFX250 Network Services platform do not support MPLS.**

- Multifield traffic classifiers—Examine multiple fields in the packet, such as source and destination addresses and source and destination port numbers of the packet. With multifield classifiers, you set the forwarding class and loss priority of a packet based on firewall filter rules.

On switches that require the separation of unicast and multidestination (multicast, broadcast, and destination lookup fail) traffic, you create separate unicast classifiers and multidestination classifiers. You cannot assign unicast traffic and multidestination traffic to the same classifier. You can apply unicast classifiers to one or more interfaces. Multidestination classifiers apply to all of the switch interfaces and cannot be applied to individual interfaces. Switches that require the separation of unicast and multidestination traffic have 12 output queues to provide 4 output queues reserved for multidestination traffic.

On switches that do not separate unicast and multidestination traffic, unicast and multidestination traffic use the same classifiers, and you do not create a separate special classifier for multidestination traffic. Switches that do not separate unicast and multidestination traffic have eight output queues because no extra queues are required to separate the traffic.

Copyright © 2018, Juniper Networks, Inc.

Forwarding Classes

Forwarding classes group packets for transmission and CoS. You assign each packet to an output queue based on the packet's forwarding class. Forwarding classes affect the forwarding, scheduling, and rewrite marking policies applied to packets as they transit the switch.

Switches provide up to five default forwarding classes:

- best-effort—Best-effort traffic
- fcoe—Fibre Channel over Ethernet traffic
- no-loss—Lossless traffic
- network-control—Network control traffic
- mcast—Multicast traffic

NOTE: The default **mcast** forwarding class applies only to switches that require the separation of unicast and multidestination (multicast, broadcast, and destination lookup fail) traffic. On these switches, you create separate forwarding classes for the two types of traffic. The default mcast forwarding class transports only multidestination traffic, and the default **best-effort**, **fcoe**, **no-loss**, and **network-control** forwarding classes transport only unicast traffic. Unicast forwarding classes map to unicast output queues, and multidestination forwarding classes map to multidestination output queues. You cannot assign unicast traffic and multidestination traffic to the same forwarding class or to the same output queue. Switches that require the separation of unicast and multidestination traffic have 12 output queues, 8 for unicast traffic and 4 for multidestination traffic.

On switches that do not separate unicast and multidestination traffic, unicast and multidestination traffic use the same forwarding classes and output queues, so the mcast forwarding class is not valid. You do not create separate forwarding classes for multidestination traffic. Switches that do not separate unicast and multidestination traffic have eight output queues because no extra queues are required to separate the traffic.

NOTE: On OCX Series switches only, do not map traffic to the default fcoe and no-loss forwarding classes. By default, the DSCP default classifier does not map traffic to the fcoe and no-loss forwarding classes, so by default, OCX Series switches do not classify traffic into those forwarding classes. (On other switches, the fcoe and no-loss forwarding classes provide lossless transport for Layer 2 traffic. OCX Series switches do not support lossless Layer 2 transport.)

Copyright © 2018, Juniper Networks, Inc.

Switches support a total of either 12 forwarding classes (8 unicast forwarding classes and 4 multicast forwarding classes), or 8 forwarding classes (unicast and multidestination traffic use the same forwarding classes), which provides flexibility in classifying traffic.

NFX250 Network Services platform provide the following forwarding classes:

- best-effort (be)—Provides no service profile. Loss priority is typically not carried in a CoS value.
- expedited-forwarding (ef)—Provides a low loss, low latency, low jitter, assured bandwidth, end-to-end service.
- assured-forwarding (af)—Provides a group of values you can define and includes four subclasses: AF1, AF2, AF3, and AF4, each with two drop probabilities: low and high.
- network-control (nc)—Supports protocol control and thus is typically high priority.

Forwarding Class Sets

You can group forwarding classes (output queues) into *forwarding class sets* to apply CoS to groups of traffic that require similar treatment. Forwarding class sets map traffic into priority groups to support enhanced transmission selection (ETS), which is described in IEEE 802.1Qaz.

You can configure up to three unicast forwarding class sets and one multicast forwarding class set. For example, you can configure different forwarding class sets to apply CoS to unicast groups of local area network (LAN) traffic, storage area network (SAN) traffic, and high-performance computing (HPC) traffic, and configure another group for multicast traffic.

Within each forwarding class set, you can configure special CoS treatment for the traffic mapped to each individual queue. This provides the ability to configure CoS in a two-tier hierarchical manner. At the forwarding class set tier, you configure CoS for groups of traffic using a *traffic control profile*. At the queue tier, you configure CoS for individual output queues within a forwarding class set using a *scheduler* that you map to a queue (forwarding class) using a *scheduler map*.

Flow Control (Ethernet PAUSE, PFC, and ECN)

Ethernet PAUSE (described in IEEE 802.3X) is a link-level flow control mechanism. During periods of network congestion, Ethernet PAUSE stops all traffic on a full-duplex Ethernet link for a period of time specified in the PAUSE message.

NOTE: **QFX10000 switches do not support Ethernet PAUSE.**

Priority-based flow control (PFC) is described in IEEE 802.1Qbb as part of the IEEE data center bridging (DCB) specifications for creating a lossless Ethernet environment to transport loss-sensitive flows such as Fibre Channel over Ethernet (FCoE) traffic.

Copyright © 2018, Juniper Networks, Inc.

NOTE: **OCX Series switches do not support PFC.**

PFC is a link-level flow control mechanism similar to Ethernet PAUSE. However, Ethernet PAUSE stops all traffic on a link for a period of time. PFC decouples the pause function from the physical link and divides the traffic on the link into eight priorities (3-bit IEEE 802.1p code points). You can think of the eight priorities as eight "lanes" of traffic. You can apply pause selectively to the traffic on any priority without pausing the traffic on other priorities on the same link.

The granularity that PFC provides allows you to configure different levels of CoS for different types of traffic on the link. You can create lossless lanes for traffic such as FCoE, LAN backup, or management, while using standard frame-drop methods of congestion management for IP traffic on the same link.

NOTE: **If you transport FCoE traffic, you must enable PFC on the priority assigned to FCoE traffic (usually IEEE 802.1p code point 011 on interfaces that carry FCoE traffic).**

Explicit congestion notification (ECN) enables end-to-end congestion notification between two endpoints on TCP/IP based networks. ECN must be enabled on both endpoints and on all of the intermediate devices between the endpoints for ECN to work properly. Any device in the transmission path that does not support ECN breaks the end-to-end ECN functionality. ECN notifies networks about congestion with the goal of reducing packet loss and delay by making the sending device decrease the transmission rate until the congestion clears, without dropping packets. RFC 3168, *The Addition of Explicit Congestion Notification (ECN) to IP*, defines ECN.

WRED Profiles and Tail Drop

A weighted random early detection (WRED) profile (drop profile) defines parameters that enable the network to drop packets during periods of congestion. A *drop profile* defines the conditions under which packets of different loss priorities drop, by determining the probability of dropping a packet for each loss priority when output queues become congested. Drop profiles essentially set a value for a level of queue fullness—when the queue fills to the level of the queue fullness value, packets drop. The combination of queue fill level, the probability of dropping a packet at that fill level, and loss priority of the packet, determine whether a packet is dropped or forwarded. Each pairing of a fill level with a drop probability creates a point on a drop profile curve.

You can associate different drop profiles with different loss priorities to set the probability of dropping packets. You can apply a drop profile for each loss priority to a forwarding class (output queue) by applying a drop profile to a scheduler, and then mapping the scheduler to a forwarding class using a scheduler map. When the queue mapped to the forwarding class experiences congestion, the drop profile determines the level of packet drop for traffic of each loss priority in that queue.

Copyright © 2018, Juniper Networks, Inc.

Loss priority affects the scheduling of a packet without affecting the packet's relative ordering. Typically you mark packets exceeding a particular service level with a high loss priority.

Tail drop is a simple drop mechanism that drops all packets indiscriminately during periods of congestion, without differentiating among the packet loss priorities of traffic flows. Tail drop requires only one curve point that corresponds to the maximum depth of the output queue, and drop probability when traffic exceeds the buffer depth is 100 percent (all packets that cannot be stored in the queue are dropped). WRED is superior to tail-drop because WRED enables you to treat traffic of different priorities in a differentiated manner, so that higher priority traffic receives preference, and because of the ability to set multiple points on the drop curve.

Schedulers

Each switch interface has multiple queues assigned to store packets. The switch determines which queue to service based on a particular method of scheduling. This process often involves determining the sequence in which different types of packets should be transmitted.

You can define the scheduling priority (**priority**), minimum guaranteed bandwidth (**transmit-rate**), maximum bandwidth (**shaping-rate**), and WRED profiles to be applied to a particular queue (forwarding class) for packet transmission. By default, extra bandwidth is shared among queues in proportion to the minimum guaranteed bandwidth of each queue. On switches that support the **excess-rate** statement, you can configure the percentage of shared extra bandwidth an output queue receives independently from the minimum guaranteed bandwidth transmit rate, or you can use default bandwidth sharing based on the transmit rate.

A scheduler map associates a specified forwarding class with a scheduler configuration. You can associate up to four user-defined scheduler maps with the interfaces.

Rewrite Rules

A *rewrite rule* sets the appropriate CoS bits in the outgoing packet. This allows the next downstream device to classify the packet into the appropriate service group. Rewriting (marking) outbound packets is useful when the switch is at the border of a network and must change the CoS values to meet the policies of the targeted peer.

NOTE: **Ingress firewall filters can also rewrite forwarding class and loss priority values.**

Related Documentation

- Understanding CoS Packet Flow on page 25

Copyright © 2018, Juniper Networks, Inc.

Assigning CoS Components to Interfaces

After you define the following CoS components, you assign them to physical or logical interfaces. Components that you assign to physical interfaces are valid for all of the logical interfaces configured on the physical interface. Components that you assign to a logical interface are valid only for that logical interface.

- Classifiers—Assign only to logical interfaces; on some switches, you can apply classifiers to physical Layer 3 interfaces and the classifiers are applied to all logical interfaces on the physical interface.
- Congestion notification profiles—Assign only to physical interfaces.

NOTE: **OCX Series switches and NFX250 Network Services platform do not support congestion notification profiles.**

- Forwarding classes—Assign to interfaces by mapping to forwarding class sets.
- Forwarding class sets—Assign only to physical interfaces.
- Output traffic control profiles—Assign only to physical interfaces (with a forwarding class set).
- Port schedulers—Assign only to physical interfaces on switches that support port scheduling. Associate the scheduler with a forwarding class in a scheduler map and apply the scheduler map to the physical interface.
- Rewrite rules—Assign only to logical interfaces; on some switches, you can apply classifiers to physical Layer 3 interfaces and the classifiers are applied to all logical interfaces on the physical interface.

You can assign a CoS component to a single interface or to multiple interfaces using wildcards. You can also assign a congestion notification profile or a forwarding class set globally to all interfaces.

To assign CoS components to interfaces:

Assign a CoS component to a physical interface by associating a CoS component (for example, a forwarding class set named **be-priority-group**) with an interface:

```
[edit class-of-service interfaces]
user@switch# set xe-0/0/7 forwarding-class-set be-priority-group
```

Assign a CoS component to a logical interface by associating a CoS component (for example, a classifier named **be_classifier**) with a logical interface:

```
[edit class-of-service interfaces]
user@switch# set xe-0/0/7 unit 0 classifiers dscp be_classifier
```

Assign a CoS component to multiple interfaces by associating a CoS component (for example, a rewrite rule named **customup-rw**) to all 10-Gigabit Ethernet interfaces on the switch, use wildcard characters for the interface name and logical interface (unit) number:

```
[edit class-of-service interfaces]
user@switch# set xe-* unit * rewrite-rules ieee-802.1 customup-rw
```

Assign a congestion notification profile or a forwarding class set globally to all interfaces using the **set class-of-service interfaces all** statement. For example, to assign a forwarding class set named **be-priority-group** to all interfaces:

```
[edit class-of-service interfaces]
user@switch# set all forwarding-class-set be-priority-group
```

NOTE: If there is an existing CoS configuration of any type on an interface, the global configuration is not applied to that particular interface. The global configuration is applied to all interfaces that do not have an existing CoS configuration.

For example, if you configure a rewrite rule, assign it to interfaces xe-0/0/20.0 and xe-0/0/22.0, and then configure a forwarding class set and apply it to all interfaces, the forwarding class set is applied to every interface except xe-0/0/20 and xe-0/0/22.

Related Documentation

- Monitoring Interfaces That Have CoS Components on page 763
- Understanding Junos CoS Components on page 17

Copyright © 2018, Juniper Networks, Inc.

Understanding CoS Packet Flow

When a packet traverses a switch, the switch provides the appropriate level of service to the packet using either default class-of-service (CoS) settings or CoS settings that you configure. On ingress ports, the switch classifies packets into appropriate forwarding classes and assigns a loss priority to the packets. On egress ports, the switch applies packet scheduling and (if you have configured them) rewrite rules to re-mark packets.

You can configure CoS on Layer 2 logical interfaces, and you can configure CoS on Layer 3 physical interfaces if you have defined at least one logical interface on the Layer 3 physical interface. You cannot configure CoS on Layer 2 physical interfaces and Layer 3 logical interfaces.

For Layer 2 traffic, either use the default CoS settings or configure CoS on each logical interface. You can apply different CoS settings to different Layer 2 logical interfaces.

NOTE: **OCX Series switches do not support Layer 2 interfaces (family ethernet-switching).**

For Layer 3 traffic, either use the default CoS settings or configure CoS on the physical interface (not on the logical unit). The switch uses the CoS applied on the physical Layer 3 interface for all logical Layer 3 interfaces configured on the physical Layer 3 interface.

The switch applies CoS to packets as they flow through the system:

- An interface has one or more classifiers of different types applied to it (configure this at the **[edit class-of-service interfaces]** hierarchy level). The classifier types are based on the portion of the incoming packet that the classifier examines (IEEE 802.1p code point bits or DSCP code point bits).
- When a packet enters an ingress port, the classifier assigns the packet to a forwarding class and a loss priority based on the code point bits of the packet (configure this at the **[edit class-of-service classifiers]** hierarchy level).
- The switch assigns each forwarding class to an output queue (configure this at the **[edit class-of-service forwarding-classes]** hierarchy level).
- Input (and output) policers meter traffic and can change the forwarding class and loss priority if a traffic flow exceeds its service level.
- A scheduler map is applied to each interface. When a packet exits an egress port, the scheduler map controls how it is treated (configure this at the **[edit class-of-service interfaces]** hierarchy level). A scheduler map assigns schedulers to forwarding classes (configure this at the **[edit class-of-service scheduler-maps]** hierarchy level).
- A scheduler defines how traffic is treated at the egress interface output queue (configure this at the **[edit class-of-service schedulers]** hierarchy level). You control the transmit rate, shaping rate, priority, and drop profile of each forwarding class by mapping schedulers to forwarding classes in scheduler maps, then applying scheduler maps to interfaces.

Copyright © 2018, Juniper Networks, Inc.

- A drop-profile defines how aggressively to drop packets that are mapped to a particular scheduler (configure this at the **[edit class-of-service drop-profiles]** hierarchy level).
- A rewrite rule takes effect as the packet leaves an interface that has a rewrite rule configured (configure this at the **[edit class-of-service rewrite-rules]** hierarchy level). The rewrite rule writes information to the packet (for example, a rewrite rule can re-mark the code point bits of outgoing traffic) according to the forwarding class and loss priority of the packet.

Figure 3 on page 26 is a high-level flow diagram of how packets from various sources enter switch interfaces, are classified at the ingress, and then scheduled (provided bandwidth) at the egress queues.

Figure 3: CoS Classifier, Queues, and Scheduler

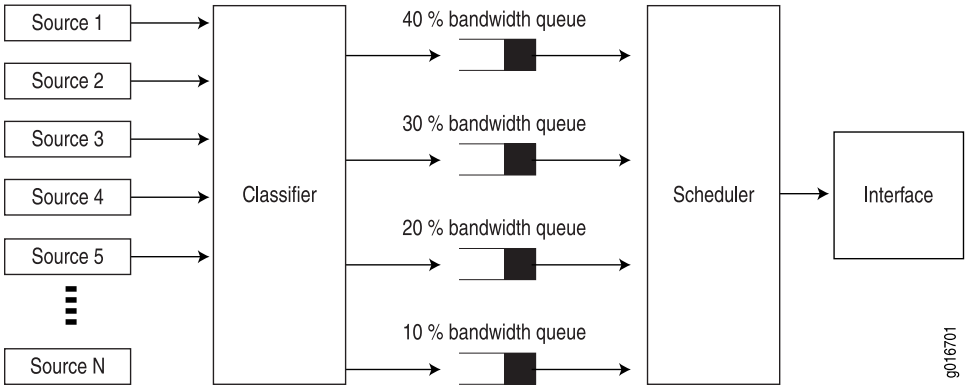

Figure 4 on page 26 shows the packet flow through the CoS components that you can configure.

Figure 4: Packet Flow Through Configurable CoS Components

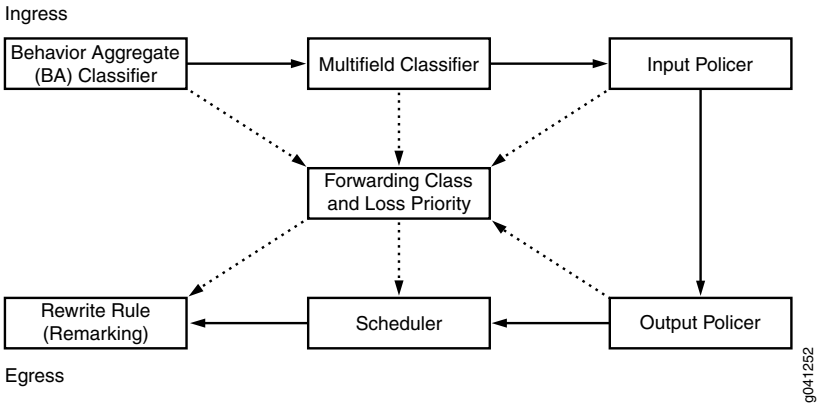

The middle box (Forwarding Class and Loss Priority) represents two values that you can use on ingress and egress interfaces. The system uses these values for classifying traffic on ingress interfaces and for rewrite rule re-marking on egress interfaces. Each outer box represents a process component. The components in the top row apply to incoming packets. The components in the bottom row apply to outgoing packets.

Copyright © 2018, Juniper Networks, Inc.

The solid-line arrows show the direction of packet flow from ingress to egress. The dotted-line arrows that point to the forwarding class and loss priority box indicate processes that configure (set) the forwarding class and loss priority. The dotted-line arrows that point away from the forwarding class and loss priority box indicate processes that use forwarding class and loss priority as input values on which to base actions.

For example, the BA classifier sets the forwarding class and loss priority of incoming packets, so the forwarding class and loss priority are outputs of the classifier and the arrow points away from the classifier. The scheduler receives the forwarding class and loss priority settings, and queues the outgoing packets based on those settings, so the arrow points toward the scheduler.

Understanding Default CoS Settings

If you do not configure CoS settings, Junos OS performs some CoS functions to ensure that traffic and protocol packets are forwarded with minimum delay when the network experiences congestion. Some default mappings are automatically applied to each logical interface that you configure.

You can display default CoS settings by issuing the **show class-of-service** operational mode command.

This topic describes the default configurations for the following CoS components:

- Default Forwarding Classes and Queue Mapping on page 27
- Default Forwarding Class Sets (Priority Groups) on page 28
- Default Code-Point Aliases on page 28
- Default Classifiers on page 30
- Default Rewrite Rules on page 33
- Default Drop Profile on page 34
- Default Schedulers on page 34
- Default Scheduler Maps on page 37
- Default Shared Buffer Configuration on page 37

Default Forwarding Classes and Queue Mapping

Table 5 on page 27 shows the default mapping of the default forwarding classes to queues and packet drop attribute.

Table 5: Default Forwarding Classes and Queue Mapping

Default Forwarding Class	Description	Default Queue Mapping	Packet Drop Attribute
best-effort (be)	Best-effort traffic class (priority 0, IEEE 802.1p code point 000)	0	drop

Table 5: Default Forwarding Classes and Queue Mapping (continued)

Default Forwarding Class	Description	Default Queue Mapping	Packet Drop Attribute
fcoe	Guaranteed delivery for FCoE traffic (priority 3, IEEE 802.1p code point 011)	3	no-loss
no-loss	Guaranteed delivery for TCP no-loss traffic (priority 4, IEEE 802.1p code point 100)	4	no-loss
network-control (nc)	Network control traffic (priority 7, IEEE 802.1p code point 111)	7	drop
(Excluding QFX10000) mcast	Multidestination traffic	8	drop NOTE: You cannot configure multidestination forwarding classes as no-loss (lossless) traffic classes.

NOTE: On the QFX10000 switch, unicast and multidestination (multicast, broadcast, and destination lookup fail) traffic use the same forwarding classes and output queues 0 through 7.

Default Forwarding Class Sets (Priority Groups)

If you do not explicitly configure forwarding class sets, the system automatically creates a default forwarding class set that contains all of the forwarding classes on the switch. The system assigns 100 percent of the port output bandwidth to the default forwarding class set.

Ingress traffic is classified based on the default classifier settings. The forwarding classes (queues) in the default forwarding class set receive bandwidth based on the default scheduler settings. Forwarding classes that are not part of the default scheduler receive no bandwidth.

The default forwarding class set is transparent. It does not appear in the configuration and is used for Data Center Bridging Capability Exchange (DCBX) protocol advertisement.

Default Code-Point Aliases

Table 6 on page 29 shows the default mapping of code-point aliases to IEEE code points.

Copyright © 2018, Juniper Networks, Inc.

Table 6: Default IEEE 802.1 Code-Point Aliases

CoS Value Types	Mapping
be	000
be1	001
ef	010
ef1	011
af11	100
af12	101
nc1	110
nc2	111

Table 7 on page 29 shows the default mapping of code-point aliases to DSCP and DSCP IPv6 code points.

Table 7: Default DSCP and DCSP IPv6 Code-Point Aliases

CoS Value Types	Mapping
ef	101110
af11	001010
af12	001100
af13	001110
af21	010010
af22	010100
af23	010110
af31	011010
af32	011100
af33	011110
af41	100010
af42	100100

Copyright © 2018, Juniper Networks, Inc.

Table 7: Default DSCP and DCSP IPv6 Code-Point Aliases (continued)

CoS Value Types	Mapping
af43	100110
be	000000
cs1	001000
cs2	010000
cs3	011000
cs4	100000
cs5	101000
nc1	110000
nc2	111000

Default Classifiers

The switch applies default unicast IEEE 802.1, unicast DSCP, and multidestination classifiers to each interface that does not have explicitly configured classifiers. If you explicitly configure one type of classifier but not other types of classifiers, the system uses only the configured classifier and does not use default classifiers for other types of traffic.

NOTE: **The QFX10000 switch applies the default MPLS EXP classifier to a logical interface if you enable the MPLS protocol family on that interface.**

There are two different default unicast IEEE 802.1 classifiers, a trusted classifier for ports that are in trunk mode or tagged-access mode, and an untrusted classifier for ports that are in access mode. Table 8 on page 30 shows the default mapping of IEEE 802.1 code-point values to forwarding classes and loss priorities for ports in trunk mode or tagged-access mode.

Table 8: Default IEEE 802.1 Classifiers for Ports in Trunk Mode or Tagged Access Mode (Trusted Classifier)

Code Point	Forwarding Class	Loss Priority
be (000)	best-effort	low
be1 (001)	best-effort	low
ef (010)	best-effort	low

Copyright © 2018, Juniper Networks, Inc.

Table 8: Default IEEE 802.1 Classifiers for Ports in Trunk Mode or Tagged Access Mode (Trusted Classifier) (continued)

Code Point	Forwarding Class	Loss Priority
ef1 (011)	fcoe	low
af11 (100)	no-loss	low
af12 (101)	best-effort	low
nc1 (110)	network-control	low
nc2 (111)	network-control	low

Table 9 on page 31 shows the default mapping of IEEE 802.1p code-point values to forwarding classes and loss priorities for ports in access mode (all incoming traffic is mapped to best-effort forwarding classes).

Table 9: Default IEEE 802.1 Classifiers for Ports in Access Mode (Untrusted Classifier)

Code Point	Forwarding Class	Loss Priority
000	best-effort	low
001	best-effort	low
010	best-effort	low
011	best-effort	low
100	best-effort	low
101	best-effort	low
110	best-effort	low
111	best-effort	low

Table 10 on page 31 shows the default mapping of IEEE 802.1 code-point values to multidestination (multicast, broadcast, and destination lookup fail traffic) forwarding classes and loss priorities.

Table 10: Default IEEE 802.1 Multidestination Classifiers

Code Point	Forwarding Class	Loss Priority
be (000)	mcast	low
be1 (001)	mcast	low

Copyright © 2018, Juniper Networks, Inc.

Table 10: Default IEEE 802.1 Multidestination Classifiers (continued)

Code Point	Forwarding Class	Loss Priority
ef (010)	mcast	low
ef1 (011)	mcast	low
af11 (100)	mcast	low
af12 (101)	mcast	low
nc1 (110)	mcast	low
nc2 (111)	mcast	low

Table 11 on page 32 shows the default mapping of DSCP code-point values to forwarding classes and loss priorities for DSCP IP and DCSP IPv6.

NOTE: There are no default DSCP IP classifiers for multidestination traffic. DSCP IPv6 classifiers are not supported for multidestination traffic.

Table 11: Default DSCP IP and IPv6 Classifiers

Code Point	Forwarding Class	Loss Priority
ef (101110)	best-effort	low
af11 (001010)	best-effort	low
af12 (001100)	best-effort	low
af13 (001110)	best-effort	low
af21 (010010)	best-effort	low
af22 (010100)	best-effort	low
af23 (010110)	best-effort	low
af31 (011010)	best-effort	low
af32 (011100)	best-effort	low
af33 (011110)	best-effort	low
af41 (100010)	best-effort	low
af42 (100100)	best-effort	low

Copyright © 2018, Juniper Networks, Inc.

Table 11: Default DSCP IP and IPv6 Classifiers (continued)

Code Point	Forwarding Class	Loss Priority
af43 (100110)	best-effort	low
be (000000)	best-effort	low
cs1 (001000)	best-effort	low
cs2 (010000)	best-effort	low
cs3 (011000)	best-effort	low
cs4 (100000)	best-effort	low
cs5 (101000)	best-effort	low
nc1 (110000)	network-control	low
nc2 (111000)	network-control	low

On QFX10000 switches, Table 12 on page 33 shows the default mapping of MPLS EXP code-point values to forwarding classes and loss priorities.

Table 12: Default EXP Classifiers on QFX10000 Switches

Code Point	Forwarding Class	Loss Priority
000	best-effort	low
001	best-effort	high
010	expedited-forwarding	low
011	expedited-forwarding	high
100	assured-forwarding	low
101	assured-forwarding	high
110	network-control	low
111	network-control	high

Default Rewrite Rules

There are no default rewrite rules. If you do not explicitly configure rewrite rules, the switch does not reclassify egress traffic.

Copyright © 2018, Juniper Networks, Inc.

Default Drop Profile

Table 13 on page 34 shows the default drop profile configuration.

Table 13: Default Drop Profile

Fill Level	Drop Probability
100	100

Default Schedulers

Table 14 on page 34 shows the default scheduler configuration.

Table 14: Default Schedulers

Default Scheduler and Queue Number	Transmit Rate (Guaranteed Minimum Bandwidth)	Shaping Rate (Maximum Bandwidth)	Excess Bandwidth Sharing	Priority	Buffer Size
best-effort forwarding class scheduler (queue 0)	5% (QFX10000 15%)	None	5% (QFX10000 15%)	low	5% (QFX10000 15%)
fcoe forwarding class scheduler (queue 3)	35%	None	35%	low	35%
no-loss forwarding class scheduler (queue 4)	35%	None	35%	low	35%
network-control forwarding class scheduler (queue 7)	5% (QFX10000 15%)	None	5% (QFX10000 15%)	low	5% (QFX10000 15%)
(Excluding QFX10000) mcast forwarding class scheduler (queue 8)	20%	None	20%	low	20%

NOTE: The minimum guaranteed bandwidth (transmit rate) also determines the amount of excess (extra) bandwidth that the queue can share. Extra bandwidth is allocated to queues in proportion to the transmit rate of each queue. On QFX10000 switches, you can use the excess-rate statement to override the default transmit rate setting and configure the excess bandwidth percentage independently of the transmit rate.

By default, only the five default schedulers shown in Table 14 on page 34, excluding the mcast scheduler on QFX10000 switches, have traffic mapped to them. Only the queues associated with the default schedulers, and forwarding classes on QFX10000 switches, receive default bandwidth, based on the default scheduler transmit rate. (You can

Copyright © 2018, Juniper Networks, Inc.

configure schedulers and forwarding classes to allocate bandwidth to other queues or to change the default bandwidth of a default queue.) In addition, other than on QFX5200, QFX5210, and QFX10000 switches, multidestination queue 11 receives enough bandwidth from the default multidestination scheduler to handle CPU-generated multidestination traffic. If a forwarding class does not transport traffic, the bandwidth allocated to that forwarding class is available to other forwarding classes.

NOTE: On QFX10000 switches, unicast and multidestination (multicast, broadcast, and destination lookup fail) traffic use the same forwarding classes and output queues.

Default hierarchical scheduling, known as enhanced transmission selection (ETS, defined in IEEE 802.1Qaz), divides the total port bandwidth between two groups of traffic: unicast traffic and multidestination traffic. By default, unicast traffic consists of queue 0 (**best-effort** forwarding class), queue 3 (**fcoe** forwarding class), queue 4 (**no-loss** forwarding class), and queue 7 (**network-control** forwarding class). Unicast traffic receives and shares a total of 80 percent of the port bandwidth. By default, multidestination traffic (**mcast** queue 8) receives a total of 20 percent of the port bandwidth. So on a 10-Gigabit port, default scheduling provides unicast traffic 8-Gbps of bandwidth and multidestination traffic 2-Gbps of bandwidth.

NOTE: Except on QFX5200, QFX5210, and QFX10000 switches, multidestination queue 11 also receives a small amount of default bandwidth from the multidestination scheduler. CPU-generated multidestination traffic uses queue 11, so you might see a small number of packets egress from queue 11. In addition, in the unlikely case that firewall filter match conditions map multidestination traffic to a unicast forwarding class, that traffic uses queue 11.

On QFX10000 switches, default scheduling is port scheduling. Default hierarchical scheduling, known as ETS, allocates the total port bandwidth to the four default forwarding classes served by the four default schedulers, as defined by the four default schedulers. The result is the same as direct port scheduling. Configuring hierarchical port scheduling, however, enables you to group forwarding classes that carry similar types of traffic into forwarding class sets (also called priority groups),and to assign port bandwidth to each forwarding class set. The port bandwidth assigned to the forwarding class set is then assigned to the forwarding classes within the forwarding class set. This hierarchy enables you to control port bandwidth allocation with greater granularity, and enables hierarchical sharing of extra bandwidth to better utilize link bandwidth.

Default scheduling for all switches uses weighted round-robin (WRR) scheduling. Each queue receives a portion (weight) of the total available interface bandwidth. The scheduling weight is based on the transmit rate of the default scheduler for that queue. For example, queue 7 receives a default scheduling weight of 5 percent, 15 percent on QFX10000 switches, of the available bandwidth, and queue 4 receives a default scheduling weight of 35 percent of the available bandwidth. Queues are mapped to

forwarding classes (for example, queue 7 is mapped to the network-control forwarding class and queue 4 is mapped to the no-loss forwarding class), so forwarding classes receive the default bandwidth for the queues to which they are mapped. Unused bandwidth is shared with other default queues.

If you want non-default (unconfigured) queues to forward traffic, you should explicitly map traffic to those queues (configure the forwarding classes and queue mapping) and create schedulers to allocate bandwidth to those queues. For example, except on QFX5200, QFX5210, and QFX10000 switches, by default, queues 1, 2, 5, and 6 are unconfigured, and multidestination queues 9, 10, and 11 are unconfigured. Unconfigured queues have a default scheduling weight of 1 so that they can receive a small amount of bandwidth in case they need to forward traffic. (However, queue 11 can use more of the default multidestination scheduler bandwidth if necessary to handle CPU-generated multidestination traffic.)

NOTE: Except on QFX10000 switches, all four multidestination queues, or two for QFX5200 and QFX5210, switches, have a scheduling weight of 1. Because by default multidestination traffic goes to queue 8, queue 8 receives almost all of the multidestination bandwidth. (There is no default traffic on queue 9 and queue 10, and very little default traffic on queue 11, so there is almost no competition for multidestination bandwidth.)

However, if you explicitly configure queue 9, 10, or 11 (by mapping code points to the unconfigured multidestination forwarding classes using the multidestination classifier), the explicitly configured queues share the multidestination scheduler bandwidth equally with default queue 8, because all of the queues have the same scheduling weight (1). To ensure that multidestination bandwidth is allocated to each queue properly and that the bandwidth allocation to the default queue (8) is not reduced too much, we strongly recommend that you configure a scheduler if you explicitly classify traffic into queue 9, 10, or 11.

If you map traffic to an unconfigured queue, the queue receives only the amount of group bandwidth proportional to its default weight (1). The actual amount of bandwidth an unconfigured queue receives depends on how much bandwidth the other queues in the group are using.

On QFX 10000 switches, if you map traffic to an unconfigured queue and do not schedule port resources for the queue (configure a scheduler, map it to the forwarding class that is mapped to the queue, and apply the scheduler mapping to the port), the queue receives only the amount of excess bandwidth proportional to its default weight (1). The actual amount of bandwidth an unconfigured queue gets depends on how much bandwidth the other queues on the port are using.

If the other queues use less than their allocated amount of bandwidth, the unconfigured queues can share the unused bandwidth. Configured queues have higher priority for bandwidth than unconfigured queues, so if a configured queue needs more bandwidth, then less bandwidth is available for unconfigured queues. Unconfigured queues always receive a minimum amount of bandwidth based on their scheduling weight (1). If you

 Copyright © 2018, Juniper Networks, Inc.

map traffic to an unconfigured queue, to allocate bandwidth to that queue, configure a scheduler for the forwarding class that is mapped to the queue and apply it to the port.

Default Scheduler Maps

Table 15 on page 37 shows the default mapping of forwarding classes to schedulers.

Table 15: Default Scheduler Maps

Forwarding Class	Scheduler
best-effort	Default BE scheduler
fcoe	Default FCoE scheduler
no-loss	No-loss scheduler
network-control	Default network-control scheduler
(Excluding QFX10000) mcast-be	Default multidestination scheduler

Default Shared Buffer Configuration

Table Table 16 on page 37 and Table 17 on page 37 show the default shared buffer allocations:

NOTE: Shared buffers do not apply to QFX10000 switches.

Table 16: Default Ingress Shared Buffer Configuration

Total Shared Ingress Buffer	Lossless Buffer	Lossless-Headroom Buffer	Lossy Buffer
100%	9%	45%	46%

Table 17: Default Egress Shared Buffer Configuration

Total Shared Egress Buffer	Lossless Buffer	Lossy Buffer	Multicast Buffer
100%	50%	31%	19%

Related Documentation

- Overview of Junos OS CoS on page 4
- Understanding Junos CoS Components on page 17
- Understanding Default CoS Scheduling and Classification on page 79
- Understanding CoS Classifiers on page 60

Copyright © 2018, Juniper Networks, Inc.

- *Understanding CoS Classifiers*
- Understanding Applying CoS Classifiers and Rewrite Rules to Interfaces on page 87
- Understanding CoS Code-Point Aliases on page 100
- Understanding CoS Forwarding Classes on page 104
- Understanding CoS Rewrite Rules on page 127
- Understanding CoS Output Queue Schedulers on page 159
- *Understanding CoS Port Schedulers on QFX Switches*
- Understanding CoS WRED Drop Profiles on page 243

CoS Inputs and Outputs Overview

Some CoS components map one set of values to another set of values. Each mapping contains one or more inputs and one or more outputs. When you configure a mapping, you set the outputs for a given set of inputs, as shown in Table 18 on page 38.

Table 18: CoS Mappings—Inputs and Outputs

CoS Mappings	Inputs	Outputs	Comments
classifiers	code-points	forwarding-class, loss-priority	The map sets the forwarding class and packet loss priority (PLP) for a specific set of code points.
drop-profile-map	loss-priority, protocol	drop-profile	The map sets the drop profile for a specific PLP and protocol type.
rewrite-rules	loss-priority, forwarding-class	code-points	The map sets the code points for a specific forwarding class and PLP.
rewrite-value (Fibre Channel Interfaces)	forwarding-class	code-point	(Systems that support native Fibre Channel interfaces only) The map sets the code point for the forwarding class specified in the fixed classifier attached to the native Fibre Channel (NP_Port) interface.

Related Documentation

- Understanding CoS Packet Flow on page 25

Copyright © 2018, Juniper Networks, Inc.

CHAPTER 3

CoS Upgrade Requirements and Feature Change Compatibility

- Overview of CoS Upgrade Requirements (Junos OS Release 11.1 or 11.2 to a Later Release) on page 40
- Overview of CoS Upgrade Requirements to Junos OS Release 12.2 on page 42
- Overview of CoS Upgrade Requirements to Junos OS Release 12.3 (QFX3500 and QFX3600 Switches) or to Junos OS Release 13.1 (QFabric Systems) on page 44
- Overview of CoS Changes Introduced in Junos OS Release 11.3 on page 46
- Overview of CoS Changes Introduced in Junos OS Release 12.2 on page 54

Copyright © 2018, Juniper Networks, Inc.

Overview of CoS Upgrade Requirements (Junos OS Release 11.1 or 11.2 to a Later Release)

Before you upgrade to Junos OS Release 11.3, you must deactivate the CoS configuration if the CoS configuration includes any of the following features:

- **excess-rate** option
- **strict-high** or **high** priority queues
- Any of the Junos OS Release 11.1 or 11.2 default multidestination forwarding classes

CAUTION: **If your CoS configuration contains any of the features listed above and you attempt to upgrade from Junos OS Release 11.1 or 11.2 to a later version without first editing the configuration, the Junos OS might not restart.**

Junos OS Release 11.3 and later for QFX Series no longer supports the **excess-rate** statement, the **strict** priority option, or the default multidestination forwarding classes used in Junos OS Release 11.1 and 11.2. In addition, Junos OS Release 11.3 introduces new restrictions on how to configure and use **strict-high** priority queues.

This topic does not describe how to perform the software upgrade procedure. It describes how to deactivate your CoS configuration, edit your CoS configuration, and reactivate your CoS configuration at the appropriate times.

Use the following procedure to upgrade safely from Junos OS Release 11.1 or 11.2 to a later release:

1. Deactivate the CoS configuration *before* you upgrade the software:

   ```
   user@switch# deactivate class-of-service
   ```

2. Follow the upgrade procedure to Junos OS Release 11.3 or later software.

3. Make the following changes to the CoS configuration while the CoS configuration is still deactivated:

   - Remove the **excess-rate** statement from the CoS configuration if you have used it at the **[edit class-of-service schedulers]** or **[edit class-of-service traffic-control-profiles]** hierarchy level.
   - Remove the **strict-high** and **strict** priority queue configurations if you have used them at the **[edit class-of-service schedulers]** hierarchy level.
   - Remove the default multidestination forwarding classes (**mcast-be**, **mcast-af**, **mcast-ef**, and **mcast-nc**) if you have used them at the **[edit class-of-service schedulers]**, **[edit class-of-service rewrite-rules]**, **[edit class-of-service classifiers]**, **[edit class-of-service scheduler-maps]**, or **[edit class-of-service forwarding-class-sets]** hierarchy level. Alternatively, you can change the mapping of the multidestination traffic to use the new default multidestination forwarding class (**mcast**).

Copyright © 2018, Juniper Networks, Inc.

4. If desired, configure **strict-high** priority queues in accordance with the Junos OS Release 11.3 or later configuration rules, and map multidestination traffic to the default multidestination forwarding class (**mcast**).

5. Activate the CoS configuration:

```
user@switch# activate class-of-service
```

6. Commit the CoS configuration:

```
user@switch# commit
```

NOTE: If you configured the **transmit-rate** option for any queues under the **[edit class-of-service schedulers]** hierarchy level, if the rate is configured as an exact rate in Mbps, we recommend that you reconfigure the **transmit-rate** option as a percentage. This is because the scheduler converts exact rates to percentages, and when the exact rate is below 1 Gbps, some granularity may be lost in the conversion. You can avoid this potential issue by specifying the **transmit-rate** option as a percentage.

Related Documentation

- *Installing Software Packages on QFX Devices*
- Understanding CoS Classifiers on page 60
- Understanding CoS Output Queue Schedulers on page 159
- Understanding CoS Traffic Control Profiles on page 182
- Overview of CoS Upgrade Requirements to Junos OS Release 12.2 on page 42
- Overview of CoS Upgrade Requirements to Junos OS Release 12.3 (QFX3500 and QFX3600 Switches) or to Junos OS Release 13.1 (QFabric Systems) on page 44
- Example: Configuring Unicast Classifiers on page 72
- Example: Configuring Queue Schedulers on page 169
- Example: Configuring Traffic Control Profiles (Priority Group Scheduling) on page 188

Copyright © 2018, Juniper Networks, Inc.

Overview of CoS Upgrade Requirements to Junos OS Release 12.2

Before you upgrade to Junos OS Release 12.2, you might need to edit the class-of-service (CoS) configuration, because the way the QFX Series handles lossless forwarding classes has changed in Junos OS Release 12.2.

By default, the **fcoe** and **no-loss** forwarding classes are mapped to output queue 3 and output queue 4, respectively. These are the only two forwarding classes (and the only two queues) that support lossless transport.

In Junos OS Release 12.1 and earlier, explicitly setting the lossless **fcoe** and **no-loss** forwarding classes resulted in the same CoS behavior as using the default configuration. However, in Junos OS Release 12.2, the behavior when you explicitly configure the lossless forwarding classes differs from the behavior when you use the default forwarding classes.

NOTE: **The default behavior differs from the explicit configuration behavior even if the explicit configuration is exactly the same as the default configuration.**

- If you use the default forwarding class configuration for the lossless queues (the configuration does not include explicit setting of the **fcoe** or the **no-loss** forwarding classes), then the **fcoe** and **no-loss** queues behave as lossless queues.

  If your CoS configuration does not explicitly configure the **fcoe** and **no-loss** forwarding classes, you can upgrade from Junos OS Release 12.1 to Junos OS Release 12.2, and the behavior of the two lossless queues remains the lossless.

- If your configuration includes statements that explicitly configure the **fcoe** or the **no-loss** forwarding class (using the **[set class-of-service forwarding-classes class *class-name* queue-num *queue-number*]** statement), after you upgrade to Junos OS Release 12.2, those queues do *not* receive lossless treatment and behave as lossy (**best-effort**) queues.

  If your CoS configuration explicitly configures the **fcoe** and **no-loss** forwarding classes, to retain the lossless behavior of those queues, you need to remove the explicit configuration for these two forwarding classes from the CoS configuration *before* you upgrade.

If you upgrade to Junos OS Release 12.2 and the **fcoe** and **no-loss** forwarding classes are explicitly configured, then those two queues continue to be used, but the traffic is treated as lossy traffic, not lossless traffic. To make the queues for these two forwarding classes lossless, you must delete the explicit forwarding class configuration.

CAUTION: **If you explicitly configured the fcoe or the no-loss forwarding class and you upgrade to Junos OS Release 12.2, the system does not return an upgrade error or a commit error, or a generate a syslog message, to notify you that these forwarding classes are no longer lossless. Traffic mapped to**

Copyright © 2018, Juniper Networks, Inc.

these forwarding classes is not treated as lossless traffic until you remove the explicit forwarding class configuration.

Before you upgrade, delete the **fcoe** and **no-loss** forwarding classes from the explicit configuration to preserve the lossless behavior of traffic mapped to these forwarding classes.

- To delete the explicit **fcoe** forwarding class configuration:

```
[edit]
user@switch# delete class-of-service forwarding-class class fcoe queue-num 3
user@switch# commit
```

- To delete the explicit **no-loss** forwarding class configuration:

```
[edit]
user@switch# delete class-of-service forwarding-class class no-loss queue-num 4
user@switch# commit
```

NOTE: If you try to delete these forwarding classes and they have not been explicitly configured on the system, the system returns the message **warning: statement not found**. This simply means that there is no explicit configuration to delete and does not change the lossless behavior of the **fcoe** and **no-loss** forwarding classes.

After you delete the explicit configuration for the **fcoe** and **no-loss** forwarding classes, traffic mapped to those forwarding classes retains its lossless behavior after the upgrade to Junos OS Release 12.2.

Related Documentation

- Overview of CoS Upgrade Requirements (Junos OS Release 11.1 or 11.2 to a Later Release) on page 40
- Overview of CoS Upgrade Requirements to Junos OS Release 12.3 (QFX3500 and QFX3600 Switches) or to Junos OS Release 13.1 (QFabric Systems) on page 44
- Overview of CoS Changes Introduced in Junos OS Release 11.3 on page 46
- *Installing Software Packages on QFX Devices*
- Understanding CoS Forwarding Classes on page 104
- Example: Configuring Forwarding Classes on page 113

Copyright © 2018, Juniper Networks, Inc.

Overview of CoS Upgrade Requirements to Junos OS Release 12.3 (QFX3500 and QFX3600 Switches) or to Junos OS Release 13.1 (QFabric Systems)

Before you upgrade to Junos OS Release 12.3 (QFX3500 and QFX3600 switches) or to Junos OS Release 13.1 (QFabric systems), you might need to edit the class-of-service (CoS) configuration, because the way the QFX Series handles lossless forwarding classes has changed from earlier Junos OS releases. (Throughout this document, changes introduced on standalone switches in Junos OS Release 12.3 are introduced on QFabric systems in Junos OS Release 13.1 unless otherwise noted.)

- Support for Six Lossless Forwarding Classes on page 44
- Scheduling on QFabric System Node Device Fabric (fte) Ports on page 46
- Strict-High Priority Scheduling on QFabric System Node Device Fabric (fte) Ports on page 46

Support for Six Lossless Forwarding Classes

By default, the *fcoe* and *no-loss* forwarding classes are mapped to output queue 3 and output queue 4, respectively, and to IEEE 802.1p priority 3 (code point 011) and priority 4 (code point 100), respectively. These are the only two forwarding classes (and the only two queues) that support lossless transport in the default configuration.

If you use the default CoS configuration, you do not need to edit the CoS configuration after upgrading to Junos OS Release 12.3 (QFX3500 and QFX3600 switches) or to Junos OS Release 13.1 (QFabric system) because the default CoS configuration is backward-compatible.

Junos OS Release 12.3 increases the support for lossless forwarding classes (priorities) from two forwarding classes to six forwarding classes. To support configuring lossless forwarding classes, Junos OS Release 12.3 introduces a new option to forwarding class configuration: the *no-loss* packet drop attribute.

NOTE: **The new *no-loss* packet drop attribute and the previously existing *no-loss* default forwarding class have the same name, but they are not the same. You can use the no-loss packet drop attribute on any unicast forwarding class.**

If you explicitly configure any lossless forwarding class (including explicitly configuring the default fcoe and no-loss forwarding classes), you *must* specify the no-loss packet drop attribute to obtain lossless behavior. If you do not explicitly configure the fcoe and no-loss forwarding classes, those forwarding classes remain lossless.

The addition of the no-loss packet drop attribute to forwarding class configuration means that when you upgrade from an earlier release to Junos OS Release 12.3, the new software might not preserve the lossless forwarding class configuration of the fcoe and no-loss forwarding classes.

Copyright © 2018, Juniper Networks, Inc.

If you used the default forwarding class configuration for the fcoe and no-loss forwarding classes, the CoS configuration is backward-compatible. You do not have to do anything to preserve the lossless behavior of traffic that uses those forwarding classes when you upgrade to Junos OS Release 12.3. (This is because the default configuration of these two forwarding classes includes the no-loss packet drop attribute.)

However, if you explicitly configured the fcoe or the no-loss forwarding class by including the **set forwarding-classes class *forwarding-class-name* queue-num *queue-number*** at the **[edit class-of-service]** hierarchy level, then those forwarding classes are no longer lossless, they are lossy. In Junos OS Release 12.3 and later, you must include the *no-loss* packet drop attribute in any explicit forwarding class configuration to configure a lossless forwarding class.

For example, before Junos OS Release 12.3, the following explicit configuration resulted in a lossless forwarding class:

```
user@switch# set class-of-service forwarding-classes class fcoe queue-num 3
```

However, in Junos OS Release 12.3, this configuration is lossy because it does not include the no-loss packet drop attribute. To preserve lossless behavior, after upgrading to Junos OS Release 12.3, you need to add the no-loss drop attribute:

```
user@switch# set class-of-service forwarding-classes class fcoe queue-num 3 no-loss
```

Alternatively, you can delete the explicit configuration before you upgrade to Junos OS Release 12.3 so that the system uses the default forwarding class, which is lossless:

```
user@switch# delete class-of-service forwarding-classes class fcoe queue-num 3
```

NOTE: The explicit configuration of other forwarding classes does not affect the lossless (or lossy) state of the fcoe and no-loss forwarding classes, because only the fcoe and no-loss forwarding classes are lossless forwarding classes before Junos OS Release 12.3. For example, if you explicitly configured the best-effort forwarding class but you used the default fcoe and no-loss forwarding classes in Junos OS Release 12.2, then when you upgrade to Junos OS Release 12.3, the fcoe and no-loss forwarding classes are still lossless (and the best-effort forwarding class retains its explicit configuration).

NOTE: To achieve lossless behavior for the traffic belonging to any forwarding class, you must also enable PFC on the IEEE 802.1p priority mapped to the forwarding class and ensure that DCBX exchanges the protocol TLVs for the application with the connected peer.

Scheduling on QFabric System Node Device Fabric (fte) Ports

Junos OS Release 13.1 introduces the ability to configure scheduling on the fabric (fte) ports of QFabric system Node devices. In earlier Junos OS releases, Node device fabric port scheduling was done by default, with no user configuration.

In Junos OS Release 13.1, the default fabric port scheduler configuration is similar to the default scheduler configuration on access interfaces. Similar to the access port default configuration, the default fabric port scheduler supports the five default forwarding classes (best-effort, fcoe, no-loss, network-control, and mcast). If you configure any new forwarding classes, you must configure scheduling on the fabric ports to allocate bandwidth to those forwarding classes, just as you must configure scheduling on the access ports for user-defined forwarding classes.

Strict-High Priority Scheduling on QFabric System Node Device Fabric (fte) Ports

If a fabric interface handles strict-high priority traffic, you must define a separate fc-set (priority group) for strict-high priority traffic. Strict-high priority traffic cannot be mixed with traffic of other priorities in an fc-set. For example, you might choose to create different fc-sets for best effort, lossless, strict-high priority, and multidestination traffic.

Related Documentation

- Overview of CoS Upgrade Requirements (Junos OS Release 11.1 or 11.2 to a Later Release) on page 40
- Overview of CoS Upgrade Requirements to Junos OS Release 12.2 on page 42
- *Installing Software Packages on QFX Devices*

Overview of CoS Changes Introduced in Junos OS Release 11.3

Junos OS Release 11.3 introduces many changes to class-of-service (CoS) functionality and to the CoS default values. This overview summarizes the changes, which other documents describe in detail.

NOTE: **Some of the CoS changes are not backward compatible with Junos OS Releases 11.1 and 11.2. "Overview of CoS Upgrade Requirements (Junos OS Release 11.1 or 11.2 to a Later Release)" on page 40 describes how to upgrade to Junos OS Release 11.3 if you have configured CoS on your QFX3500 switch.**

This topic describes the following changes in CoS default values and behavior:

- CoS Default Value Changes on page 47
- Queue Priority Configuration Changes on page 52
- Minimum Guaranteed Bandwidth (Transmit Rate and Guaranteed Rate) Changes on page 52
- Excess Rate Statement Disabled on page 53

Copyright © 2018, Juniper Networks, Inc.

- Queue Scheduling (Low and Strict-High Priority Queues) on page 53
- Multidestination Traffic Changes on page 54

CoS Default Value Changes

The default values of the following CoS components have changed in Junos OS Release 11.3:

- Default Forwarding Classes on page 47
- Default IEEE 802.1p Unicast Classifiers on page 48
- Default IEEE 802.1p Multidestination Classifiers on page 49
- Default Scheduler on page 50

Default Forwarding Classes

In Junos OS Releases 11.1 and 11.2, there were eight default forwarding classes, four unicast default forwarding classes and four default multidestination (multicast, broadcast, and destination lookup fail) forwarding classes. Table 19 on page 47 shows the old default forwarding classes and default queue mapping:

Table 19: Junos OS Release 11.1 and 11.2 Default Forwarding Classes and Queue Mapping

Default Forwarding Class	Description	Default Queue Mapping
best-effort (be)	Unicast best-effort traffic	0
no-loss	Unicast guaranteed delivery for TCP no-loss traffic	2
fcoe	Unicast guaranteed delivery for FCoE traffic	3
network-control	Unicast network control traffic	7
multicast-best-effort (mcast-be)	Multidestination best-effort traffic	8
multicast-expedited-forwarding (mcast-ef)	Multidestination low-loss, low-latency traffic	9
multicast-assured-forwarding (mcast-af)	Multidestination assured forwarding traffic	10
multicast-network-control (mcast-nc)	Multidestination network control traffic	11

Junos OS Release 11.3 changes the default forwarding classes and queue mapping in the following ways:

- Instead of eight default forwarding classes, there are five default forwarding classes.
- The same four unicast default forwarding classes remain valid, but the default queue mapping of the no-loss forwarding class has changed from queue 2 to queue 4.

Copyright © 2018, Juniper Networks, Inc.

- There is now only one default multidestination forwarding class instead of four default multidestination forwarding classes. All multidestination traffic is assigned by default to the default multidestination forwarding class.

NOTE: The rest of the forwarding class characteristics remain the same as before. For example, the QFX Series still supports 12 forwarding classes and 12 output queues. You can still configure a total of eight unicast forwarding classes and four multidestination forwarding classes. The unicast queues are still queues 0 through 7 and the multidestination queues are still queues 8 through 11. Unicast traffic must be mapped to unicast queues, and multidestination traffic must be mapped to multidestination queues. The queue to which a forwarding class is mapped determines whether the forwarding class is unicast or multidestination.

Table 20 on page 48 shows the default forwarding classes and queue mapping in Junos OS 11.3 and later:

Table 20: Junos OS Release 11.3 Default Forwarding Classes and Queue Mapping

Default Forwarding Class	Description	Default Queue Mapping
best-effort (be)	Best-effort traffic class	0
fcoe	Guaranteed delivery for FCoE traffic	3
no-loss	Guaranteed delivery for TCP no-loss traffic	4
network-control (nc)	Network control traffic	7
mcast	Multicast traffic	8

Default IEEE 802.1p Unicast Classifiers

In Junos OS Release 11.1 and 11.2, there were default unicast classifiers only for best-effort and network-control traffic, as shown in Table 21 on page 48:

Table 21: Junos OS Release 11.1 and 11.2 Default IEEE 802.1 Unicast Classifiers

Code Point	Forwarding Class	Loss Priority
be (000)	best-effort	low
be1 (001)	best-effort	low
ef (010)	best-effort	low
ef1 (011)	best-effort	low
af11 (100)	best-effort	low

Copyright © 2018, Juniper Networks, Inc.

Table 21: Junos OS Release 11.1 and 11.2 Default IEEE 802.1 Unicast Classifiers (continued)

Code Point	Forwarding Class	Loss Priority
af12 (101)	best-effort	low
nc1 (110)	network-control	low
nc2 (111)	network-control	low

Junos OS Release 11.3 introduces new default classifiers for FCoE and no-loss traffic, replacing the best-effort classifiers mapped to IEEE 802.1p code points 011 and 100, respectively, as shown in Table 22 on page 49:

Table 22: Junos OS Release 11.3 Default IEEE 802.1 Unicast Classifiers

Code Point	Forwarding Class	Loss Priority
be (000)	best-effort	low
be1 (001)	best-effort	low
ef (010)	best-effort	low
ef1 (011)	fcoe	low
af11 (100)	no-loss	low
af12 (101)	best-effort	low
nc1 (110)	network-control	low
nc2 (111)	network-control	low

Default IEEE 802.1p Multidestination Classifiers

In Junos OS Release 11.1 and 11.2, there were default multidestination classifiers for best-effort and network-control traffic, as shown in Table 23 on page 49:

Table 23: Junos OS Release 11.1 and 11.2 Default IEEE 802.1 Multidestination Classifiers

Code Point	Forwarding Class	Loss Priority
be (000)	mcast-be	low
be1 (001)	mcast-be	low
ef (010)	mcast-be	low
ef1 (011)	mcast-be	low

Copyright © 2018, Juniper Networks, Inc.

Table 23: Junos OS Release 11.1 and 11.2 Default IEEE 802.1 Multidestination Classifiers (continued)

Code Point	Forwarding Class	Loss Priority
af11 (100)	mcast-be	low
af12 (101)	mcast-be	low
nc1 (110)	mcast-nc	low
nc2 (111)	mcast-nc	low

Junos OS Release 11.3 replaces the best-effort and network-control multidestination classifiers and maps all IEEE 802.1p code points to the new default multidestination forwarding class, as shown in Table 24 on page 50:

Table 24: Junos OS Release 11.3 Default IEEE 802.1 Multidestination Classifiers

Code Point	Forwarding Class	Loss Priority
be (000)	mcast	low
be1 (001)	mcast	low
ef (010)	mcast	low
ef1 (011)	mcast	low
af11 (100)	mcast	low
af12 (101)	mcast	low
nc1 (110)	mcast	low
nc2 (111)	mcast	low

Default Scheduler

In Junos OS Release 11.1 and 11.2, there were four default schedulers:

- Unicast best effort
- Unicast network control
- Multidestination best effort
- Multidestination network control

Table 25 on page 51 shows the default scheduler configuration in Junos OS Release 11.1 and 11.2:

Copyright © 2018, Juniper Networks, Inc.

Table 25: Junos OS Release 11.1 and 11.2 Default Schedulers

Default Scheduler and Queue Number	Guaranteed Rate (Minimum Bandwidth)	Shaping Rate (Maximum Bandwidth)	Excess Rate (Extra Bandwidth Sharing)	Priority
Best-effort scheduler (queue 0)	75%	None	25%	Low
Network-control scheduler (queue 7)	5%	None	25%	Low
Best-effort multidestination scheduler (queue 8)	15%	None	25%	Low
Network-control multidestination scheduler (queue 11)	5%	None	25%	Low

Junos OS Release 11.3 replaces the four old classifiers with five new classifiers:

- Unicast best effort
- FCoE
- No loss
- Unicast network control
- Multidestination

There are now four different default unicast classifiers to provide default CoS for lossless queues (FCoE and no-loss traffic). Because there is only one default multidestination forwarding class in Junos OS Release 11.3, there is only one default multidestination classifier for all multidestination traffic. Also, the excess rate default value is removed from the scheduler because the **excess-rate** statement is no longer supported, as described elsewhere in this document. Table 26 on page 51 shows the default scheduler configuration in Junos OS Releases 11.3:

Table 26: Default Schedulers

Default Scheduler and Queue Number	Guaranteed Rate (Minimum Bandwidth)	Shaping Rate (Maximum Bandwidth)	Excess Bandwidth Sharing	Priority
Best-effort scheduler (queue 0)	5%	None	5%	Low
FCoE scheduler (queue 3)	35%	None	35%	Low
No-loss scheduler (queue 4)	35%	None	35%	Low
Network-control scheduler (queue 7)	5%	None	5%	Low
Multidestination scheduler (queue 8)	20%	None	20%	Low

Copyright © 2018, Juniper Networks, Inc.

NOTE: The minimum guaranteed bandwidth rate also determines the amount of excess (extra) bandwidth that the queue can share. Extra bandwidth is allocated to queues in proportion to the minimum guaranteed bandwidth rate of each queue.

Queue Priority Configuration Changes

In Junos OS Release 11.1 and 11.2, you could configure strict-high priority queues with a guaranteed minimum bandwidth and configure forwarding class sets (priority groups) with a mix of low priority and strict-high priority queues. In Junos OS Release 11.3 and later, these configurations are invalid, and several other changes have also been implemented:

- Priority configuration in Junos OS Release 11.1 and 11.2 provided three priority levels: **strict-high**, **high**, and **low**. In Junos OS Release 11.3, the **high** priority option has been removed. Only the **strict-high** and **low** priority options are valid in Release 11.3.
- Minimum guaranteed bandwidth (transmit rate) is not allowed on strict-high priority queues. Minimum guaranteed bandwidth (guaranteed rate) is not allowed on forwarding class sets that contain strict-high priority queues.
- You cannot configure a multidestination queue as a strict-high priority queue. You cannot configure a queue as a strict-high priority queue if it belongs to the multidestination forwarding class set.
- Only one forwarding class set can contain strict-high priority queues. If you want to configure a strict-high priority queue, you must also configure a separate forwarding class set for the strict-high priority queue. A forwarding class set cannot contain a mixture of low priority and strict-high priority queues.

The rest of the queue priority characteristics remain the same as before. For example, you can configure only one queue as a strict-high priority queue.

NOTE: If you have configured strict-high or high priority queues in Junos OS Release 11.1 or 11.2, the changes in Release 11.3 are not backward compatible. Please read "Overview of CoS Upgrade Requirements (Junos OS Release 11.1 or 11.2 to a Later Release)" on page 40 before you upgrade to Release 11.3.

Minimum Guaranteed Bandwidth (Transmit Rate and Guaranteed Rate) Changes

The following restrictions have been placed on minimum guaranteed bandwidth configuration in Junos OS Release 11.3:

- You cannot configure a guaranteed minimum bandwidth (transmit rate) for strict-high priority queues.
- Queues (forwarding classes) with a configured transmit rate cannot be included in a forwarding class set that has strict-high priority queues.

Copyright © 2018, Juniper Networks, Inc.

- You cannot configure a guaranteed minimum bandwidth (guaranteed rate) for forwarding class sets that include strict-high priority queues.
- For transmit rates below 1 Gbps, we recommend that you configure the transmit rate as a percentage instead of as a fixed rate. This is because the system converts fixed rates into percentages and may round small fixed rates to a lower percentage. For example, a fixed rate of 350 Mbps is rounded down to 3 percent instead of 3.5 percent.

Excess Rate Statement Disabled

The **excess-rate** statement has been disabled in Junos OS Release 11.3. Excess rate was used to specify the way extra bandwidth was shared among queues.

The **excess-rate** statement was used at the **[edit class-of-service schedulers]** hierarchy level for queue scheduling configuration and at the **[edit class-of-service traffic-control-profiles]** hierarchy level for forwarding class set scheduling configuration.

In Junos OS Release 11.3, extra bandwidth sharing among queues is proportional to the minimum guaranteed bandwidth (transmit rate) of the queue. Extra bandwidth sharing among forwarding class sets (priority groups) is proportional to the minimum guaranteed bandwidth (guaranteed rate) of the forwarding class set.

NOTE: **If you have configured the excess-rate option in Junos OS Release 11.1 or 11.2, the changes in Release 11.3 are not backward compatible. Please read** "Overview of CoS Upgrade Requirements (Junos OS Release 11.1 or 11.2 to a Later Release)" on page 40 **before you upgrade to Release 11.3.**

Queue Scheduling (Low and Strict-High Priority Queues)

In Junos OS Release 11.1 and 11.2, if you configured a guaranteed minimum bandwidth (transmit rate) for low-priority queues, the low-priority queues received their guaranteed minimum bandwidth from the same bandwidth pool as the strict-high priority queue, using round-robin scheduling. Until the minimum bandwidth requirements of all queues were met, the strict-high priority queue and low-priority queues that had a guaranteed minimum bandwidth were treated equally. After the minimum bandwidth requirements of all queues were met, the strict-high priority queue received as much of the leftover bandwidth as it needed. This meant that the only way to ensure that a strict-high priority queue received all of the bandwidth it needed was not to configure a guaranteed minimum bandwidth for other queues.

In Junos OS Release 11.3 and later, queue scheduling has changed so that queues receive bandwidth in the following sequence:

1. The strict-high priority queue receives all of the bandwidth it needs before any other queue is served. The strict-high priority queue can take the full port bandwidth if necessary and can starve other queues on the port.

2. The guaranteed minimum bandwidth (transmit rate) of low-priority queues is served until the minimum is met or the queues are empty.

3. All other low-priority queues and needs that exceed the minimum bandwidth are served.

Multidestination Traffic Changes

The changes to the default forwarding classes and classifiers affects multidestination traffic handling in Junos OS Release 11.3:

- The number of default multidestination forwarding classes has been reduced from four default multidestination forwarding classes in Junos OS Release 11.1 and 11.2 to one default multidestination in Release 11.3 (see Table 20 on page 48).
- The default classifier configuration for multidestination traffic has changed so that there is now one default classifier for all multidestination traffic (see Table 24 on page 50).
- By default, all IEEE 802.1p code points map to the default multidestination forwarding class.
- The default scheduler for multidestination traffic has changed so that there is now one default scheduler for all multidestination traffic (see Table 26 on page 51).
- You cannot configure multidestination queues as strict-high priority queues and you cannot include strict-high priority queues in a forwarding class set that contains multidestination queues.

Related Documentation

- Overview of CoS Upgrade Requirements (Junos OS Release 11.1 or 11.2 to a Later Release) on page 40
- Overview of CoS Changes Introduced in Junos OS Release 12.2 on page 54
- Understanding Default CoS Settings on page 27
- Understanding Default CoS Scheduling and Classification on page 79
- Understanding CoS Output Queue Schedulers on page 159

Overview of CoS Changes Introduced in Junos OS Release 12.2

Junos OS Release 12.2 introduces some changes to class-of-service (CoS) functionality and to the CoS default values. This overview summarizes the changes, which other documents describe in detail.

This topic describes the following changes in CoS default values and behavior:

- Lossless Forwarding Classes (fcoe and no-loss) on page 55
- Default MTU for Headroom Buffer Calculation for Lossless Forwarding Classes on page 55
- CoS for Layer 3 Physical Interfaces on page 56
- DSCP IPv6 Classifiers and Rewrite Rules on page 56

 Copyright © 2018, Juniper Networks, Inc.

Lossless Forwarding Classes (fcoe and no-loss)

The way the QFX Series handles lossless forwarding classes (the **fcoe** and **no-loss** forwarding classes) changes in Junos OS Release 12.2. In Junos OS Release 12.2 and in earlier releases, by default, the **fcoe** and **no-loss** forwarding classes are mapped to output queue 3 and output queue 4, respectively. These are the only two forwarding classes (and the only two queues) that support lossless transport.

In earlier releases, explicitly setting the lossless **fcoe** and **no-loss** forwarding classes resulted in the same CoS behavior as using the default configuration. However, in Junos OS Release 12.2, the behavior when you explicitly configure the lossless forwarding classes differs from the behavior when you use the default forwarding classes.

NOTE: **The default behavior differs from the explicit configuration behavior even if the explicit configuration is exactly the same as the default configuration.**

If you use the default forwarding class settings for the lossless queues (the configuration does not include explicit setting of the **fcoe** or the **no-loss** forwarding classes), then the **fcoe** and **no-loss** queues behave as lossless queues. When you upgrade to Junos OS Release 12.2, traffic assigned to the **fcoe** and **no-loss** queues continues to be treated as lossless traffic.

If your configuration explicitly sets the **fcoe** or the **no-loss** forwarding class (**set class-of-service forwarding-classes class *class-name* queue-num *queue-number***), after you upgrade to Junos OS Release 12.2, those queues do *not* receive lossless treatment and behave as lossy (**best-effort**) queues. To retain lossless treatment of the **fcoe** and **no-loss** queues, delete the explicit lossless forwarding class configuration before you upgrade to Junos OS Release 12.2.

CAUTION: **If you explicitly configured the fcoe or the no-loss forwarding class, and you upgrade to Junos OS Release 12.2, the system does not return an upgrade error or a commit error, or a generate a syslog message, to notify you that these forwarding classes are no longer lossless. Traffic mapped to these forwarding classes is not treated as lossless traffic until you remove the explicit forwarding class configuration.**

Default MTU for Headroom Buffer Calculation for Lossless Forwarding Classes

The default maximum transmission unit (MTU) the system uses for buffer headroom calculation is 2500 bytes for traffic classified into the **fcoe** forwarding class or the **no-loss** forwarding class.

In Junos OS Release 12.2, the default MTU used for buffer headroom calculation for the **fcoe** and **no-loss** forwarding classes remains 2500 bytes. However, if the buffer is filled, in Junos OS Release 12.2 you might experience commit failures.

CoS for Layer 3 Physical Interfaces

Before Junos OS Release 12.2, the QFX Series supported only Layer 2 CoS. Junos OS Release 12.2 introduces CoS support for Layer 3 traffic at the physical interface level.

If a physical Layer 3 interface has at least one logical interface configured on it, you can configure Layer 3 CoS for the physical interface. The CoS configured on the physical interface applies to all of the logical Layer 3 interfaces on that physical interface. The system does not support Layer 3 CoS configuration on individual Layer 3 logical interfaces.

DSCP IPv6 Classifiers and Rewrite Rules

Junos OS Release 12.2 introduces support for DSCP IPv6 classifiers and rewrite rules. The existing DSCP IP default classifier is now also the DSCP IPv6 default classifier.

You can configure and apply DSCP IPv6 classifiers and DSCP IPv6 rewrite rules to Layer 2 logical interfaces and to Layer 3 physical interfaces.

NOTE: **DSCP IPv6 classifiers are not supported for multidestination (multicast, broadcast, and destination lookup fail) traffic.**

Related Documentation

- Overview of CoS Upgrade Requirements to Junos OS Release 12.2 on page 42
- Overview of CoS Changes Introduced in Junos OS Release 11.3 on page 46
- Understanding Default CoS Settings on page 27
- Understanding CoS Classifiers on page 60
- Understanding Applying CoS Classifiers and Rewrite Rules to Interfaces on page 87

Copyright © 2018, Juniper Networks, Inc.

PART 2

Classifying Traffic (Classifiers, Forwarding Classes, and Rewrite Rules)

- Using Classifiers, Forwarding Classes, and Rewrite Rules on page 59

Copyright © 2018, Juniper Networks, Inc.

CHAPTER 4

Using Classifiers, Forwarding Classes, and Rewrite Rules

- Understanding CoS Classifiers on page 60
- Defining CoS BA Classifiers (DSCP, DSCP IPv6, IEEE 802.1p) on page 69
- Defining CoS BA Classifiers (DSCP, DSCP IPv6, IEEE 802.1p) on page 71
- Example: Configuring Unicast Classifiers on page 72
- Example: Configuring Multidestination (Multicast, Broadcast, DLF) Classifiers on page 75
- Understanding Host Inbound Traffic Classification on page 78
- Understanding Default CoS Scheduling and Classification on page 79
- Understanding Applying CoS Classifiers and Rewrite Rules to Interfaces on page 87
- Understanding CoS Code-Point Aliases on page 100
- Defining CoS Code-Point Aliases on page 103
- Understanding CoS Forwarding Classes on page 104
- Defining CoS Forwarding Classes on page 111
- Example: Configuring Forwarding Classes on page 113
- Understanding CoS Forwarding Class Sets (Priority Groups) on page 118
- Defining CoS Forwarding Class Sets on page 120
- Example: Configuring Forwarding Class Sets on page 120
- Understanding Host Routing Engine Outbound Traffic Queues and Defaults on page 124
- Changing the Host Outbound Traffic Default Queue Mapping on page 126
- Understanding CoS Rewrite Rules on page 127
- Defining CoS Rewrite Rules on page 130
- Configuring CoS Fixed Classifier Rewrite Values for Native FC Interfaces (NP_Ports) on page 132
- Troubleshooting an Unexpected Rewrite Value on page 133

Understanding CoS Classifiers

Packet classification maps incoming packets to a particular class-of-service (CoS) servicing level. Classifiers map packets to a forwarding class and a loss priority, and they assign packets to output queues based on the forwarding class. There are three general types of classifiers:

- Behavior aggregate (BA) classifiers—DSCP and DSCP IPv6 classify IP and IPv6 traffic, EXP classifies MPLS traffic, and IEEE 802.1p classifies all other traffic. (Although this topic covers EXP classifiers, for more details, see *Understanding CoS MPLS EXP Classifiers and Rewrite Rules*. EXP classifiers are applied only on **family mpls** interfaces.)
- Fixed classifiers—Fixed classifiers classify all ingress traffic on a physical interface into one forwarding class, regardless of the CoS bits in the packet header.
- Multifield (MF) classifiers—MF classifiers classify traffic based on more than one field in the packet header and take precedence over BA and fixed classifiers.

Classifiers assign incoming unicast and multidestination (multicast, broadcast, and destination lookup fail) traffic to forwarding classes, so that different classes of traffic can receive different treatment. Classification is based on CoS bits, DSCP bits, EXP bits, a forwarding class (fixed classifier), or packet headers (multifield classifiers). Each classifier assigns all incoming traffic that matches the classifier configuration to a particular forwarding class. Except on QFX10000 switches, classifiers and forwarding classes handle either unicast or multidestination traffic. You cannot mix unicast and multidestination traffic in the same classifier or forwarding class. On QFX10000 switches, a classifier can assign both unicast and multidestination traffic to the same forwarding class.

- Interfaces and Output Queues on page 60
- Output Queues for Unicast and Multidestination Traffic on page 61
- Classifier Support by Type on page 62
- Behavior Aggregate Classifiers on page 63
- Fixed Classifiers on Ethernet Interfaces on page 66
- Fixed Classifiers on Native Fibre Channel Interfaces (NP_Ports) on page 67
- Multifield Classifiers on page 67
- MPLS EXP Classifiers on page 67
- Packet Classification for IRB Interfaces and RVIs on page 68

Interfaces and Output Queues

On Gigabit Ethernet interfaces, 10-Gigabit Ethernet interfaces, and link aggregation (LAG) interfaces, you can apply classifiers to Layer 2 logical interface unit 0 (but not to other logical interfaces), and to Layer 3 physical interfaces if the Layer 3 physical interface has at least one defined logical interface. Classifiers applied to Layer 3 physical interfaces are used on all logical interfaces on that physical interface. "Understanding Applying CoS Classifiers and Rewrite Rules to Interfaces" on page 87 describes the interaction between classifiers and interfaces in greater detail.

 Copyright © 2018, Juniper Networks, Inc.

NOTE: On QFX10000 switches you can apply different classifiers to different Layer 3 logical interfaces. You cannot apply classifiers to physical interfaces.

You can configure both a BA classifier and an MF classifier on an interface. If you do this, the BA classification is performed first, and then the MF classification is performed. If the two classification results conflict, the MF classification result overrides the BA classification result.

You cannot configure a fixed classifier and a BA classifier on the same interface.

Except on QFX10000 switches, you can configure both a DSCP or DSCP IPv6 classifier and an IEEE 802.1p classifier on the same interface. IP traffic uses the DSCP or DSCP IPv6 classifier. All other traffic uses the IEEE classifier (except when you configure a global EXP classifier; in that case, MPLS traffic uses the EXP classifier providing that the interface is configured as **family mpls**). You can configure only one DSCP classifier on a physical interface (either one DSCP classifier or one DSCP IPv6 classifier, but not both).

On QFX10000 switches, you can configure either a DSCP or a DSCP IPv6 classifier and also an IEEE 802.1p classifier on the same interface. IP traffic uses the DSCP or DSCP IPv6 classifier. If you configure an interface as **family mpls**, then the interface uses the default MPLS EXP classifier. If you configure an MPLS EXP classifier, then all MPLS traffic on the switch uses the global EXP classifier. All other traffic uses the IEEE classifier. You can configure up to 64 EXP classifiers with up to 8 entries per classifier (one entry for each forwarding class) and apply them to logical interfaces.

Except on QFX10000 switches, although you can configure as many EXP classifiers as you want, the switch uses only one MPLS EXP classifier as a global classifier on all interfaces.

After you configure an MPLS EXP classifier, you can configure it as the global EXP classifier by including the EXP classifier at the **[edit class-of-service system-defaults classifiers exp]** hierarchy level. All switch interfaces that are configured as **family mpls** use the EXP classifier, on QFX10000 switches either the default or the global EXP classifier, specified in this configuration statement to classify MPLS traffic.

Output Queues for Unicast and Multidestination Traffic

NOTE: This section applies to switches except QFX10000.

You can create unicast BA classifiers for unicast traffic and multicast BA classifiers for multidestination traffic, which includes multicast, broadcast, and destination lookup fail (DLF) traffic. You cannot assign unicast traffic and multidestination traffic to the same BA classifier.

On each interface, the switch has separate output queues for unicast traffic and for multidestination traffic:

NOTE: QFX5200 switches support 10 output queues, with 8 queues dedicated to unicast traffic and 2 queues dedicated to multidestination traffic.

- The switch supports 12 output queues, with 8 queues dedicated to unicast traffic and 4 queues dedicated to multidestination traffic.
- Queues 0 through 7 are unicast traffic queues. You can apply only unicast BA classifiers to unicast queues. A unicast BA classifier should contain only forwarding classes that are mapped to unicast queues.
- Queues 8 through 11 are multidestination traffic queues. You can apply only multidestination BA classifiers to multidestination queues. A multidestination BA classifier should contain only forwarding classes that are mapped to multidestination queues.

You can apply unicast classifiers to one or more interfaces. Multidestination classifiers and EXP classifiers apply to all of the switch interfaces and cannot be applied to individual interfaces. Use the DSCP multidestination classifier for both IP and IPv6 multidestination traffic. The DSCP IPv6 classifier is not supported for multidestination traffic.

Classifier Support by Type

NOTE: This section applies only to QFX10000 switches.

You can configure enough classifiers to handle most, if not all, network scenarios. Table 27 on page 62 shows how many of each type of classifiers you can configure, and how many entries you can configure per classifier.

Table 27: Classifier Support by Classifier Type

Classifier Type	Default Classifier Name	Maximum Number of Classifiers	Maximum Number of Entries per Classifier
IEEE 802.1p (Layer 2)	ieee8021p-default (for ports in trunk mode) ieee8021p-untrust (for ports in access mode)	64	16
DSCP (Layer 3)	dscp-default	64	64
DSCP IPv6 (Layer 3)	dscp-ipv6-default	64	64
EXP (MPLS)	exp-default	64	8
Fixed	There is no default fixed classifier	8	16

Copyright © 2018, Juniper Networks, Inc.

The number of fixed classifiers supported (8) equals the number of supported forwarding classes (fixed classifiers assign all incoming traffic on an interface to one forwarding class).

Behavior Aggregate Classifiers

Behavior aggregate classifiers map a class-of-service (CoS) value to a forwarding class and loss priority. The forwarding class determines the output queue. A scheduler uses the loss priority to control packet discard during periods of congestion by associating different drop profiles with different loss priorities.

The switch supports three types of BA classifiers:

- Differentiated Services code point (DSCP) for IP DiffServ (IP and IPv6)
- IEEE 802.1p CoS bits
- MPLS EXP (applies only to interfaces configured as **family mpls**)

BA classifiers are based on fixed-length fields, which makes them computationally more efficient than MF classifiers. Therefore, core devices, which handle high traffic volumes, are normally configured to perform BA classification.

Unicast and multicast traffic cannot share the same classifier. You can map unicast traffic and multicast traffic to the same classifier CoS value, but the unicast traffic must belong to a unicast classifier and the multicast traffic must belong to a multidestination classifier.

Default Behavior Aggregate Classification

Juniper Networks Junos OS automatically assigns implicit default classifiers to all logical interfaces based on the type of interface. Table 28 on page 63 lists different types of interfaces and the corresponding implicit default BA classifiers.

Table 28: Default BA Classification

Type of Interface	Default BA Classification
Layer 2 interface in trunk mode or, except on QFX10000, tagged-access mode	**ieee8021p-default**
(QFX10000 only) Layer 2 interface in access mode	**ieee8021p-untrusted**
Layer 3 interface	**dscp-default** **dscp-ipv6-default**
(Except QFX10000) Layer 2 interface in access mode	**ieee8021p-untrusted**
(QFX10000 only) MPLS interface	**exp-default**

NOTE: Default BA classifiers assign traffic only to the **best-effort**, **fcoe**, **no-loss**, **network-control**, and, except on QFX10000 switches, **mcast** forwarding classes.

NOTE: Except on QFX10000 switches, there is no default MPLS EXP classifier. You must configure an EXP classifier and apply it globally to all interfaces that are configured as **family mpls** by including it in the **[edit class-of-service system-defaults classifiers exp]** hierarchy. On **family mpls** interfaces, if a fixed classifier is present on the interface, the EXP classifier overrides the fixed classifier.

If an EXP classifier is not configured, then if a fixed classifier is applied to the interface, the MPLS traffic uses the fixed classifier. If no EXP classifier and no fixed classifier is applied to the interface, MPLS traffic is treated as best-effort traffic. DSCP classifiers are not applied to MPLS traffic.

Because the EXP classifier is global, you cannot configure some ports to use a fixed IEEE 802.1p classifier for MPLS traffic on some interfaces and the global EXP classifier for MPLS traffic on other interfaces. When you configure a global EXP classifier, all MPLS traffic on all interfaces uses the EXP classifier, even interfaces that have a fixed classifier.

When you explicitly associate a classifier with a logical interface, you override the default classifier with the explicit classifier. For other than QFX10000 switches, this applies to unicast classifiers.

NOTE: You can apply only one DSCP and one IEEE 802.1p classifier to a Layer 2 interface. If both types of classifiers are present, DSCP classifiers take precedence over IEEE 802.1p classifiers. If on QFX10000 switches you configure an EXP classifier, or on other switches a global EXP classifier, and apply it on interfaces configured as **family mpls**, then MPLS traffic uses that classifier on those interfaces.

Importing a Classifier

You can use any existing classifier, including the default classifiers, as the basis for defining a new classifier. You accomplish this using the **import** statement.

The imported classifier is used as a template and is not modified. The modifications you make become part of a new classifier (and a new template) identified by the name of the new classifier. Whenever you commit a configuration that assigns a new forwarding class-name and loss-priority value to a code-point alias or set of bits, it replaces the old entry in the new classifier template. As a result, you must explicitly specify every CoS value in every packet classification that requires modification.

Copyright © 2018, Juniper Networks, Inc.

Multidestination Classifiers

NOTE: This section applies to switches except QFX10000.

Multidestination classifiers are applied to all interfaces and cannot be applied to individual interfaces. You can configure both a DSCP multidestination classifier and an IEEE multidestination classifer. IP and IPv6 traffic use the DSCP classifier, and all other traffic uses the IEEE classifier.

DSCP IPv6 multidestination classifiers are not supported, so IPv6 traffic uses the DSCP multidestination classifier.

The default multidestination classifier is the IEEE 802.1p multidestination classifier.

PFC Priorities

The eight IEEE 802.1p code points correspond to the eight priorities that priority-based flow control (PFC) uses to differentiate traffic classes for lossless transport. When you map a forwarding class (which maps to an output queue) to an IEEE 802.1p CoS value, the IEEE 802.1p CoS value identifies the PFC priority.

Although you can map a priority to any output queue (by mapping the IEEE 802.1p code point value to a forwarding class), we recommend that the priority and the forwarding class (unicast except for QFX10000 switches) match in a one-to-one correspondence. For example, priority 0 is assigned to queue 0, priority 1 is assigned to queue 1, and so on, as shown in Table 29 on page 65. A one-to-one correspondence of queue and priority numbers makes it easier to configure and maintain the mapping of forwarding classes to priorities and queues.

Table 29: Default IEEE 802.1p Code Point to PFC Priority, Output Queue, and Forwarding Class Mapping

IEEE 802.1p Code Point	PFC Priority	Output Queue (Unicast except for QFX10000)	Forwarding Class and Packet Drop Attribute
000	0	0	best-effort (drop)
001	1	1	best-effort (drop)
010	2	2	best-effort (drop)
011	3	3	fcoe (no-loss)
100	4	4	no-loss (no-loss)
101	5	5	best-effort (drop)
110	6	6	network-control (drop)

Table 29: Default IEEE 802.1p Code Point to PFC Priority, Output Queue, and Forwarding Class Mapping (continued)

IEEE 802.1p Code Point	PFC Priority	Output Queue (Unicast except for QFX10000)	Forwarding Class and Packet Drop Attribute
111	7	7	network-control (drop)

NOTE: By convention, deployments with converged server access typically use IEEE 802.1p priority 3 (011) for FCoE traffic. The default mapping of the fcoe forwarding class is to queue 3. Apply priority-based flow control (PFC) to the entire FCoE data path to configure the end-to-end lossless behavior that FCoE requires. We recommend that you use priority 3 for FCoE traffic unless your network architecture requires that you use a different priority.

Fixed Classifiers on Ethernet Interfaces

Fixed classifiers map all traffic on a physical interface to a forwarding class and a loss priority, unlike BA classifiers, which map traffic into multiple different forwarding classes based on the IEEE 802.1p CoS bits field value in the VLAN header or the DSCP field value in the type-of-service bits in the packet IP header. Each forwarding class maps to an output queue. However, when you use a fixed classifier, regardless of the CoS or DSCP bits, all Incoming traffic is classified into the forwarding class specified in the fixed classifier. A scheduler uses the loss priority to control packet discard during periods of congestion by associating different drop profiles with different loss priorities.

You cannot configure a fixed classifier and a DSCP or IEEE 802.1p BA classifier on the same interface. If you configure a fixed classifier on an interface, you cannot configure a DSCP or an IEEE classifier on that interface. If you configure a DSCP classifier, an IEEE classifier, or both classifiers on an interface, you cannot configure a fixed classifier on that interface.

NOTE: For MPLS traffic on the same interface, you can configure both a fixed classifier and an EXP classifier on QFX10000, or a global EXP classifier on other switches. When both an EXP classifier or global EXP classifier and a fixed classifier are applied to an interface, MPLS traffic on interfaces configured as family mpls uses the EXP classifier, and all other traffic uses the fixed classifier.

To switch from a fixed classifier to a BA classifier, or to switch from a BA classifier to a fixed classifier, deactivate the existing classifier attachment on the interface, and then attach the new classifier to the interface.

Copyright © 2018, Juniper Networks, Inc.

NOTE: If you configure a fixed classifier that classifies all incoming traffic into the **fcoe** forwarding class (or any forwarding class designed to handle FCoE traffic), you must ensure that all traffic that enters the interface is FCoE traffic and is tagged with the FCoE IEEE 802.1p code point (priority).

Fixed Classifiers on Native Fibre Channel Interfaces (NP_Ports)

NOTE: This section applies to switches except QFX10000.

Applying a fixed classifier to a native Fibre Channel (FC) interface (NP_Port) is a special case. By default, native FC interfaces classify incoming traffic from the FC SAN into the **fcoe** forwarding class and map the traffic to IEEE 802.1p priority 3 (code point 011). When you apply a fixed classifier to an FC interface, you also configure a priority rewrite value for the interface. The FC interface uses the priority rewrite value as the IEEE 802.1p tag value for all incoming packets instead of the default value of 3.

For example, if you specify a priority rewrite value of 5 (code point 101) for an FC interface, the interface tags all incoming traffic from the FC SAN with priority 5 and classifies the traffic into the forwarding class specified in the fixed classifier.

NOTE: The forwarding class specified in the fixed classifier on FC interfaces must be a lossless forwarding class.

Multifield Classifiers

Multifield classifiers examine multiple fields in a packet such as source and destination addresses and source and destination port numbers of the packet. With MF classifiers, you set the forwarding class and loss priority of a packet based on firewall filter rules.

MF classification is normally performed at the network edge because of the general lack of DiffServ code point (DSCP) support in end-user applications. On a switch at the edge of a network, an MF classifier provides the filtering functionality that scans through a variety of packet fields to determine the forwarding class for a packet. Typically, a classifier performs matching operations on the selected fields against a configured value.

MPLS EXP Classifiers

You can configure up to 64 EXP classifiers for MPLS traffic and apply them to **family mpls** interfaces. On QFX10000 switches you can use the default MPLS EXP, but on other switches there is no default MPLS classifier. You can configure an EXP classifier and apply it globally to all interfaces that are configured as **family mpls** by including it in the **[edit class-of-service system-defaults classifiers exp]** hierarchy level. On **family mpls** interfaces, if a fixed classifier is present on the interface, the EXP classifier overrides the fixed classifier for MPLS traffic only.

Except on QFX10000 switches, if an EXP classifier is not configured, then if a fixed classifier is applied to the interface, the MPLS traffic uses the fixed classifier. If no EXP classifier and no fixed classifier is applied to the interface, MPLS traffic is treated as best-effort traffic. DSCP classifiers are not applied to MPLS traffic.

Because the EXP classifier is global, you cannot configure some ports to use a fixed IEEE 802.1p classifier for MPLS traffic on some interfaces and the global EXP classifier for MPLS traffic on other interfaces. When you configure a global EXP classifier, all MPLS traffic on all interfaces uses the EXP classifier, even interfaces that have a fixed classifier.

For details about EXP classifiers, see *Understanding CoS MPLS EXP Classifiers and Rewrite Rules*. EXP classifiers are applied only on **family mpls** interfaces.

Packet Classification for IRB Interfaces and RVIs

On QFX10000 switches, you cannot apply classifiers directly to integrated routing and bridging (IRB) interfaces. Similarly, on other switches you cannot apply classifiers directly to routed VLAN interfaces (RVIs). This results because the members of IRBs and RVIs are VLANs, not ports. However, you can apply classifiers to the VLAN port members of an IRB interface. You can also apply MF classifiers to IRBs and RVIs.

Related Documentation

- *Understanding CoS MPLS EXP Classifiers and Rewrite Rules*
- Understanding CoS Packet Flow on page 25
- Understanding Default CoS Settings on page 27
- Understanding Applying CoS Classifiers and Rewrite Rules to Interfaces on page 87
- Defining CoS BA Classifiers (DSCP, DSCP IPv6, IEEE 802.1p) on page 69
- Example: Configuring Unicast Classifiers on page 72
- Defining CoS BA Classifiers (DSCP, DSCP IPv6, IEEE 802.1p) on page 69
- Example: Configuring Multidestination (Multicast, Broadcast, DLF) Classifiers on page 75
- *Configuring a Global MPLS EXP Classifier*
- *Configuring Rewrite Rules for MPLS EXP Classifiers*

Copyright © 2018, Juniper Networks, Inc.

Defining CoS BA Classifiers (DSCP, DSCP IPv6, IEEE 802.1p)

Packet classification associates incoming packets with a particular CoS servicing level. Behavior aggregate (BA) classifiers examine the Differentiated Services code point (DSCP or DSCP IPv6) value, the IEEE 802.1p CoS value, or the MPLS EXP value in the packet header to determine the CoS settings applied to the packet. (See *Configuring a Global MPLS EXP Classifier* to learn how to define EXP classifiers for MPLS traffic.) BA classifiers allow you to set the forwarding class and loss priority of a packet based on the incoming CoS value.

NOTE: **OCX Series switches do not support MPLS EXP classifiers.**

On switches except QFX10000 and NFX Series devices, unicast traffic must use different classifiers than multidestination (mulitcast, broadcast, and destination lookup fail) traffic. You use the **multi-destination** statement at the **[edit class-of-service]** hierarhcy level to configure a multidestination BA classifier.

On QFX10000 switches and NFX Series devices, unicast and multidestination traffic use the same classifiers and forwarding classes.

Multidestination classifiers apply to all of the switch interfaces and handle multicast, broadcast, and destination lookup fail (DLF) traffic. You cannot apply a multidestination classifier to a single interface or to a range of interfaces.

To configure a DSCP, DSCP IPv6, or IEEE 802.1p BA classifier using the CLI:

1. Create a BA classifier:

   - To create a DSCP, DSCP IPv6, or IEEE 802.1p BA classifier based on the default classifier, import the default DSCP, DSCP IPv6, or IEEE 802.1p classifier and associate it with a forwarding class, a loss priority, and a code point:

     ```
     [edit class-of-service classifiers]
     user@switch# set (dscp | dscp-ipv6 | ieee-802.1) classifier-name import default
     forwarding-class forwarding-class-name loss-priority level code-points [aliases]
     [bit-patterns]
     ```

   - To create a BA classifier that is not based on the default classifier, create a DSCP, DSCP IPv6, or IEEE 802.1p classifier and associate it with a forwarding class, a loss priority, and a code point:

     ```
     [edit class-of-service classifiers]
     user@switch# set (dscp | dscp-ipv6 | ieee-802.1) classifier-name forwarding-class
     forwarding-class-name loss-priority level code-points [aliases] [bit-patterns]
     ```

2. For multidestination traffic, except on QFX10000 switches or NFX Series devices, configure the classifier as a multidestination classifier:

   ```
   [edit class-of-service]
   user@switch# set multi-destination classifiers (dscp | dscp-ipv6 | ieee-802.1 | inet-precedence)
   classifier-name
   ```

3. Apply the classifier to a specific Ethernet interface or to all Ethernet interfaces, or to all Fibre Channel interfaces on the device.

   - To apply the classifier to a specific interface:

     ```
     [edit class-of-service interfaces]
     user@switch# set interface-name unit unit classifiers (dscp | dscp-ipv6 | ieee-802.1)
     classifier-name
     ```

   - To apply the classifier to all Ethernet interfaces on the switch, use wildcards for the interface name and the logical interface (unit) number:

     ```
     [edit class-of-service interfaces]
     user@switch# set xe-* unit * classifiers (dscp | dscp-ipv6 | ieee-802.1) classifier-name
     ```

Related Documentation

- Example: Configuring CoS Hierarchical Port Scheduling (ETS) on page 198
- Example: Configuring Unicast Classifiers on page 72
- *Configuring a Global MPLS EXP Classifier*
- *Configuring Rewrite Rules for MPLS EXP Classifiers*
- Monitoring CoS Classifiers on page 821
- Understanding CoS Classifiers on page 60
- *Understanding CoS Classifiers*
- *Understanding CoS MPLS EXP Classifiers and Rewrite Rules*
- Understanding Applying CoS Classifiers and Rewrite Rules to Interfaces on page 87
- *Understanding Applying CoS Classifiers and Rewrite Rules to Interfaces*

Copyright © 2018, Juniper Networks, Inc.

Defining CoS BA Classifiers (DSCP, DSCP IPv6, IEEE 802.1p)

Packet classification associates incoming packets with a particular CoS servicing level. Behavior aggregate (BA) classifiers examine the Differentiated Services code point (DSCP or DSCP IPv6) value, the IEEE 802.1p CoS value, or the MPLS EXP value in the packet header to determine the CoS settings applied to the packet. (See *Configuring a Global MPLS EXP Classifier* to learn how to define EXP classifiers for MPLS traffic.) BA classifiers allow you to set the forwarding class and loss priority of a packet based on the incoming CoS value.

NOTE: **OCX Series switches do not support MPLS EXP classifiers.**

On switches except QFX10000 and NFX Series devices, unicast traffic must use different classifiers than multidestination (mulitcast, broadcast, and destination lookup fail) traffic. You use the **multi-destination** statement at the **[edit class-of-service]** hierarhcy level to configure a multidestination BA classifier.

On QFX10000 switches and NFX Series devices, unicast and multidestination traffic use the same classifiers and forwarding classes.

Multidestination classifiers apply to all of the switch interfaces and handle multicast, broadcast, and destination lookup fail (DLF) traffic. You cannot apply a multidestination classifier to a single interface or to a range of interfaces.

To configure a DSCP, DSCP IPv6, or IEEE 802.1p BA classifier using the CLI:

1. Create a BA classifier:

   - To create a DSCP, DSCP IPv6, or IEEE 802.1p BA classifier based on the default classifier, import the default DSCP, DSCP IPv6, or IEEE 802.1p classifier and associate it with a forwarding class, a loss priority, and a code point:

     ```
     [edit class-of-service classifiers]
     user@switch# set (dscp | dscp-ipv6 | ieee-802.1) classifier-name import default
     forwarding-class forwarding-class-name loss-priority level code-points [aliases]
     [bit-patterns]
     ```

   - To create a BA classifier that is not based on the default classifier, create a DSCP, DSCP IPv6, or IEEE 802.1p classifier and associate it with a forwarding class, a loss priority, and a code point:

     ```
     [edit class-of-service classifiers]
     user@switch# set (dscp | dscp-ipv6 | ieee-802.1) classifier-name forwarding-class
     forwarding-class-name loss-priority level code-points [aliases] [bit-patterns]
     ```

2. For multidestination traffic, except on QFX10000 switches or NFX Series devices, configure the classifier as a multidestination classifier:

   ```
   [edit class-of-service]
   user@switch# set multi-destination classifiers (dscp | dscp-ipv6 | ieee-802.1 | inet-precedence)
   classifier-name
   ```

3. Apply the classifier to a specific Ethernet interface or to all Ethernet interfaces, or to all Fibre Channel interfaces on the device.

   - To apply the classifier to a specific interface:

     ```
     [edit class-of-service interfaces]
     user@switch# set interface-name unit unit classifiers (dscp | dscp-ipv6 | ieee-802.1)
     classifier-name
     ```

   - To apply the classifier to all Ethernet interfaces on the switch, use wildcards for the interface name and the logical interface (unit) number:

     ```
     [edit class-of-service interfaces]
     user@switch# set xe-* unit * classifiers (dscp | dscp-ipv6 | ieee-802.1) classifier-name
     ```

Related Documentation

- Example: Configuring CoS Hierarchical Port Scheduling (ETS) on page 198
- Example: Configuring Unicast Classifiers on page 72
- *Configuring a Global MPLS EXP Classifier*
- *Configuring Rewrite Rules for MPLS EXP Classifiers*
- Monitoring CoS Classifiers on page 821
- Understanding CoS Classifiers on page 60
- *Understanding CoS Classifiers*
- *Understanding CoS MPLS EXP Classifiers and Rewrite Rules*
- Understanding Applying CoS Classifiers and Rewrite Rules to Interfaces on page 87
- *Understanding Applying CoS Classifiers and Rewrite Rules to Interfaces*

Example: Configuring Unicast Classifiers

Packet classification associates incoming packets with a particular CoS servicing level. Classifiers associate packets with a forwarding class and loss priority and assign packets to output queues based on the associated forwarding class. You apply classifiers to ingress interfaces.

- Requirements on page 72
- Overview on page 73
- Configuring Unicast Classifiers on page 74
- Verification on page 74

Requirements

This example uses the following hardware and software components:

- One switch except QFX10000 (this example was tested on a Juniper Networks QFX3500 switch)

Copyright © 2018, Juniper Networks, Inc.

- Junos OS Release 11.1 or later for the QFX Series

Overview

Junos OS supports two general types of classifiers:

- Behavior aggregate or CoS value traffic classifiers—Examine the CoS value in the packet header. The value in this single field determines the CoS settings applied to the packet. BA classifiers allow you to set the forwarding class and loss priority of a packet based on the Differentiated Services code point (DSCP) value or IEEE 802.1p value.
- Multifield traffic classifiers—Examine multiple fields in the packet, such as source and destination addresses and source and destination port numbers of the packet. With multifield classifiers, you set the forwarding class and loss priority of a packet based on firewall filter rules.

NOTE: **You must assign unicast traffic and multidestination (multicast, broadcast, and destination lookup fail) traffic to different classifiers. One classifier cannot include both unicast and multidestination forwarding classes. A unicast classifier can include only forwarding classes for unicast traffic.**

This example describes how to configure a BA classifier called **ba-ucast-classifier** as the default IEEE 802.1 map and apply it to ingress interface **xe-0/0/10**. The BA classifier assigns loss priorities, as shown in Table 30 on page 73, to incoming packets in the four forwarding classes.

You can use the same procedure to set multifield classifiers (except that you use firewall filter rules).

Table 30: ba-ucast-classifier Loss Priority Assignments

Unicast Forwarding Class	For CoS Traffic Type	ba-ucast-classifier Assignment	Packet Drop Attribute
be	Best-effort traffic	Low loss priority code point: **000**	Low loss priority code point: **000**
fcoe	Guaranteed delivery for Fibre Channel over Ethernet (FCoE) traffic	Low loss priority code point: **011**	no-loss
no-loss	Guaranteed delivery for TCP traffic	Low loss priority code point: **100**	Low loss priority code point: **100**
nc	Network-control traffic	Low loss priority code point: **110**	drop

Copyright © 2018, Juniper Networks, Inc.

Configuring Unicast Classifiers

To configure a unicast IEEE 802.1 BA classifier named **ba-ucast-classifier** as the default IEEE 802.1 map:

1. Associate code point **000** with forwarding class **be** and loss priority **low**:

   ```
   [edit class-of-service classifiers]
   user@switch# set ieee-802.1 ba-ucast-classifier import default forwarding-class be
   loss-priority low code-points 000
   ```

2. Associate code point **011** with forwarding class **fcoe** and loss priority **low**:

   ```
   [edit class-of-service classifiers]
   user@switch# set ieee-802.1 ba-ucast-classifier forwarding-class fcoe loss-priority low
   code-points 011
   ```

3. Associate code point **100** with forwarding class **no-loss** and loss priority **low**:

   ```
   [edit class-of-service classifiers]
   user@switch# set ieee-802.1 ba-ucast-classifier forwarding-class no-loss loss-priority low
   code-points 100
   ```

4. Associate code point **110** with forwarding class **nc** and loss priority **low**:

   ```
   [edit class-of-service classifiers]
   user@switch# set ieee-802.1 ba-ucast-classifier forwarding-class nc loss-priority low
   code-points 110
   ```

5. Apply the unicast classifier to ingress interface **xe-0/0/10**:

   ```
   [edit class-of-service interfaces]
   user@switch# set xe-0/0/10 unit 0 classifiers ieee-802.1 ba-ucast-classifier
   ```

Verification

To verify the unicast classifier configuration, perform these tasks:

- Verifying the Unicast Classifier Configuration on page 74
- Verifying the Ingress Interface Configuration on page 75

Verifying the Unicast Classifier Configuration

Purpose Verify that you configured the unicast classifier with the correct forwarding classes, loss priorities, and code points.

Action List the classifier configuration using the operational mode command **show configuration class-of-service classifiers ieee-802.1 ba-ucast-classifier**:

```
user@switch> show configuration class-of-service classifiers ieee-802.1 ba-ucast-classifier
    forwarding-class be {
        loss-priority low code-points 000;
```

 Copyright © 2018, Juniper Networks, Inc.

```
    }
    forwarding-class fcoe {
        loss-priority low code-points 011;
    }
    forwarding-class no-loss {
        loss-priority low code-points 100;
    }
    forwarding-class nc
        loss-priority low code-points 110;
    }
```

Verifying the Ingress Interface Configuration

Purpose Verify that the unicast classifier **ba-ucast-classifier** is attached to ingress interface **xe-0/0/10**.

Action List the ingress interface using the operational mode command **show configuration class-of-service interfaces xe-0/0/10**:

```
user@switch> show configuration class-of-service interfaces xe-0/0/10
```

```
congestion-notification-profile fcoe-cnp;
unit 0 {
    classifiers {
        ieee-802.1 ba-ucast-classifier;
    }
}
```

Related Documentation

- Example: Configuring CoS Hierarchical Port Scheduling (ETS) on page 198
- Example: Configuring Multidestination (Multicast, Broadcast, DLF) Classifiers on page 75
- Defining CoS BA Classifiers (DSCP, DSCP IPv6, IEEE 802.1p) on page 69
- *Configuring a Global MPLS EXP Classifier*
- Defining CoS BA Classifiers (DSCP, DSCP IPv6, IEEE 802.1p) on page 69
- Monitoring CoS Classifiers on page 821
- Understanding CoS Classifiers on page 60
- *Understanding CoS Classifiers*
- Understanding Applying CoS Classifiers and Rewrite Rules to Interfaces on page 87

Example: Configuring Multidestination (Multicast, Broadcast, DLF) Classifiers

Packet classification associates incoming packets with a particular CoS servicing level. Behavior aggregate (BA) classifiers examine the CoS value in the packet header to

determine the CoS settings applied to the packet. BA classifiers allow you to set the forwarding class and loss priority of a packet based on the incoming CoS value.

Beginning with Junos OS Release 17.1, EX4300 switches support multidestination classifiers. On EX4300 switches, you can apply multidestination classifiers globally or to a specific interface. If you apply multidestination classifiers both globally and to a specific interface, the classifications on the interface take precedence.

Multidestination classifiers apply to all of the switch interfaces and handle multicast, broadcast, and destination lookup fail (DLF) traffic. You cannot apply a multidestination classifier to a single interface or to a range of interfaces, except on an EX4300 switch.

Unicast and multidestination traffic must use different classifiers.

- Requirements on page 76
- Overview on page 76
- Configuring Multidestination Classifiers on page 77
- Verification on page 77

Requirements

This example uses the following hardware and software components:

- One switch (this example was tested on a Juniper Networks QFX3500 Switch)
- Junos OS Release 11.1 or later for the QFX Series.

Overview

Junos OS supports three general types of classifiers:

- Behavior aggregate or CoS value traffic classifiers—Examine the CoS value in the packet header. The value in this single field determines the CoS settings applied to the packet. BA classifiers allow you to set the forwarding class and loss priority of a packet based on the CoS value.
- Fixed classifiers. Fixed classifiers classify all ingress traffic on a physical interface into one forwarding class, regardless of the CoS bits in the VLAN header or the DSCP bits in the packet header.
- Multifield traffic classifiers—Examine multiple fields in the packet such as source and destination addresses and source and destination port numbers of the packet. With multifield classifiers, you set the forwarding class and loss priority of a packet based on firewall filter rules.

Multidestination classifiers apply to all of the switch interfaces and handle multicast, broadcast, and destination lookup fail (DLF) traffic. You cannot apply a multidestination classifier to a single interface or to a range of interfaces.

Copyright © 2018, Juniper Networks, Inc.

NOTE: You must assign unicast traffic and multicast traffic to different classifiers. One classifier cannot include both unicast and multicast forwarding classes. A multidestination classifier can include only forwarding classes for multicast traffic.

The following example describes how to configure a BA classifier called **ba-mcast-classifier**, which is applied to all of the switch interfaces. The BA classifier assigns loss priorities, as shown in Table 31 on page 77, to incoming packets in the multidestination forwarding class.

You can also use firewall filters to set multifield classifiers.

Table 31: BA-mcast-classifier Loss Priority Assignments

Multicast Forwarding Class	Traffic Type	ba-mcast-classifier Assignment
mcast	Best-effort multicast traffic	Low loss priority code point: **000**

Configuring Multidestination Classifiers

To configure a multicast IEEE 802.1 BA classifier named **ba-mcast-classifier**:

1. Associate code point **000** with forwarding class **mcast** and loss priority **low**:

```
[edit class-of-service classifiers]
user@switch# set ieee-802.1 ba-mcast-classifier forwarding-class mcast loss-priority low
code-points 000
```

2. Configure the classifier as a multidestination classifier:

```
[edit class-of-service]
user@switch# set multi-destination classifiers ieee-802.1 ba-mcast-classifier
```

Verification

To verify the multidestination classifier configuration, perform these tasks:

- Verifying the IEEE 802.1 Multidestination Classifier on page 77
- Verifying the Multidestination Classifier Configuration on page 78

Verifying the IEEE 802.1 Multidestination Classifier

Purpose Verify that the classifier **ba-mcast-classifier** is configured as the IEEE 802.1 multidestination classifier:

Action Verify the results of the classifier configuration using the operational mode command **show configuration class-of-service multi-destination classifiers ieee-802.1**:

```
user@switch> show configuration class-of-service multi-destination classifiers ieee-802.1
ba-mcast-classifier;
```

Verifying the Multidestination Classifier Configuration

Purpose Verify that you configured the multidestination classifier with the correct forwarding classes, loss priorities, and code points.

Action List the classifier configuration using the operational mode command **show configuration class-of-service classifiers ieee-802.1 ba-mcast-classifier**:

```
user@switch> show configuration class-of-service classifiers ieee-802.1 ba-mcast-classifier
    forwarding-class mcast {
        loss-priority low code-points 000;
    }
```

Release History Table

Release	Description
17.1	Beginning with Junos OS Release 17.1, EX4300 switches support multidestination classifiers.

Related Documentation

- Example: Configuring Unicast Classifiers on page 72
- Defining CoS BA Classifiers (DSCP, DSCP IPv6, IEEE 802.1p) on page 69
- Monitoring CoS Classifiers on page 821
- Understanding CoS Classifiers on page 60
- *Understanding CoS Classifiers*
- Understanding Applying CoS Classifiers and Rewrite Rules to Interfaces on page 87

Understanding Host Inbound Traffic Classification

The destination address of traffic that enters the switch can be an external device such as another switch, a router, or a server, or the destination can be the host (the switch Routing Engine or CPU). When the destination is an external device, the DSCP and IEEE 802.1p code-point bits of incoming traffic are preserved as the traffic travels through the switch to the egress port. At the egress port, the code-point bits are either preserved when the packets are sent to the next hop or they are rewritten according to the rewrite rule attached to the egress interface.

 Copyright © 2018, Juniper Networks, Inc.

When the destination of incoming traffic is the host, DSCP bits are preserved. However, IEEE 802.1p bits are not preserved. The IEEE 802.1p bits of traffic destined for the host are set to zero (0). This does not affect system behavior because the switch prioritizes traffic destined for the host based on the protocol type. For example, the switch gives a higher priority to BPDU traffic than to ping traffic.

Understanding Default CoS Scheduling and Classification

If you do not explicitly configure classifiers and apply them to interfaces, the switch uses the default classifier to group ingress traffic into forwarding classes. If you do not configure scheduling on an interface, the switch uses the default schedulers to provide egress port resources for traffic. Default classification maps all traffic into default forwarding classes (best-effort, fcoe, no-loss, network-control, and mcast). Each default forwarding class has a default scheduler, so that the traffic mapped to each default forwarding class receives port bandwidth, prioritization, and packet drop characteristics.

The switch supports direct port scheduling and enhanced transmission selection (ETS), also known as hierarchical port scheduling, except on QFX5200 and QFX5210 switches.

Hierarchical scheduling groups IEEE 802.1p priorities (IEEE 802.1p code points, which classifiers map to forwarding classes, which in turn are mapped to output queues) into priority groups (forwarding class sets). If you use only the default traffic scheduling and classification, the switch automatically creates a default priority group that contains all of the priorities (which are mapped to forwarding classes and output queues), and assigns 100 percent of the port output bandwidth to that priority group. The forwarding classes (queues) in the default forwarding class set receive bandwidth based on the default classifier settings. The default priority group is transparent. It does not appear in the configuration and is used for Data Center Bridging Capability Exchange (DCBX) protocol advertisement.

NOTE: If you explicitly configure one or more priority groups on an interface, any forwarding class that is not assigned to a priority group on that interface receives *no bandwidth*. This means that if you configure hierarchical scheduling on an interface, every forwarding class (priority) that you want to forward traffic on that interface must belong to a forwarding class set (priority group). ETS is not supported on QFX5200 or QFX5210 switches.

The following sections describe:

- Default Classification on page 79
- Default Scheduling on page 83
- Default DCBX Advertisement on page 86
- Default Scheduling and Classification Summary on page 87

Default Classification

On switches except QFX10000 and NFX Series devices, the default classifiers assign unicast and multicast best-effort and network-control ingress traffic to default forwarding

classes and loss priorities. The switch applies default unicast IEEE 802.1, unicast DSCP, and multidestination classifiers to each interface that does not have explicitly configured classifiers.

On QFX10000 switches and NFX Series devices, the default classifiers assign ingress traffic to default forwarding classes and loss priorities. The switch applies default IEEE 802.1, DSCP, and DSCP IPv6 classifiers to each interface that does not have explicitly configured classifiers. If you do not configure and apply EXP classifiers for MPLS traffic to logical interfaces, MPLS traffic on interfaces configured as **family mpls** uses the IEEE classifier.

If you explicitly configure one type of classifier but not other types of classifiers, the system uses only the configured classifier and does not use default classifiers for other types of traffic. There are two default IEEE 802.1 classifiers: a trusted classifier for ports that are in trunk mode or tagged-access mode, and an untrusted classifier for ports that are in access mode.

NOTE: **The default classifiers apply to unicast traffic except on QFX10000 switches and NFX Series devices. Tagged-access mode does not apply to QFX10000 switches or NFX Series devices.**

Table 32 on page 80 shows the default mapping of IEEE 802.1 code-point values to forwarding classes and loss priorities for ports in trunk mode or tagged-access mode.

Table 32: Default IEEE 802.1 Classifiers for Ports in Trunk Mode or Tagged-Access Mode (Trusted Classifier)

Code Point	Forwarding Class	Loss Priority
be (000)	best-effort	low
be1 (001)	best-effort	low
ef (010)	best-effort	low
ef1 (011)	fcoe	low
af11 (100)	no-loss	low
af12 (101)	best-effort	low
nc1 (110)	network-control	low
nc2 (111)	network-control	low

Table 33 on page 81 shows the default mapping of IEEE 802.1p code-point values to forwarding classes and loss priorities for ports in access mode (all incoming traffic is mapped to best-effort forwarding classes).

Copyright © 2018, Juniper Networks, Inc.

NOTE: Table 33 on page 81 applies only to unicast traffic except on QFX10000 switches and NFX Series devices.

Table 33: Default IEEE 802.1 Classifiers for Ports in Access Mode (Untrusted Classifier)

Code Point	Forwarding Class	Loss Priority
000	best-effort	low
001	best-effort	low
010	best-effort	low
011	best-effort	low
100	best-effort	low
101	best-effort	low
110	best-effort	low
111	best-effort	low

Table 34 on page 81 shows the default mapping of IEEE 802.1 code-point values to multidestination (multicast, broadcast, and destination lookup fail traffic) forwarding classes and loss priorities.

NOTE: Table 34 on page 81 does not apply to QFX10000 switches or NFX Series devices.

Table 34: Default IEEE 802.1 Multidestination Classifiers

Code Point	Forwarding Class	Loss Priority
be (000)	mcast	low
be1 (001)	mcast	low
ef (010)	mcast	low
ef1 (011)	mcast	low
af11 (100)	mcast	low
af12 (101)	mcast	low
nc1 (110)	mcast	low

Copyright © 2018, Juniper Networks, Inc.

Table 34: Default IEEE 802.1 Multidestination Classifiers (continued)

Code Point	Forwarding Class	Loss Priority
nc2 (111)	mcast	low

Table 35 on page 82 shows the default mapping of DSCP code-point values to forwarding classes and loss priorities for DSCP IP and DCSP IPv6.

NOTE: Table 35 on page 82 applies only to unicast traffic except on QFX10000 switches and NFX Series devices.

Table 35: Default DSCP IP and IPv6 Classifiers

Code Point	Forwarding Class	Loss Priority
ef (101110)	best-effort	low
af11 (001010)	best-effort	low
af12 (001100)	best-effort	low
af13 (001110)	best-effort	low
af21 (010010)	best-effort	low
af22 (010100)	best-effort	low
af23 (010110)	best-effort	low
af31 (011010)	best-effort	low
af32 (011100)	best-effort	low
af33 (011110)	best-effort	low
af41 (100010)	best-effort	low
af42 (100100)	best-effort	low
af43 (100110)	best-effort	low
be (000000)	best-effort	low
cs1 (001000)	best-effort	low
cs2 (010000)	best-effort	low
cs3 (011000)	best-effort	low

Copyright © 2018, Juniper Networks, Inc.

Table 35: Default DSCP IP and IPv6 Classifiers (continued)

Code Point	Forwarding Class	Loss Priority
cs4 (100000)	best-effort	low
cs5 (101000)	best-effort	low
nc1 (110000)	network-control	low
nc2 (111000)	network-control	low

NOTE: There are no default DSCP IP or IPv6 multidestination classifiers for multidestination traffic. DSCP IPv6 multidestination classifiers are not supported for multidestination traffic.

Table 36 on page 83 shows the default mapping of MPLS EXP code-point values to forwarding classes and loss priorities, which apply only on QFX10000 switches and NFX Series devices.

Table 36: Default EXP Classifiers on QFX10000 Switches and NFX Series Devices

Code Point	Forwarding Class	Loss Priority
000	best-effort	low
001	best-effort	high
010	expedited-forwarding	low
011	expedited-forwarding	high
100	assured-forwarding	low
101	assured-forwarding	high
110	network-control	low
111	network-control	high

Default Scheduling

The default schedulers allocate egress bandwidth resources to egress traffic as shown in Table 37 on page 84:

Table 37: Default Scheduler Configuration

Default Scheduler and Queue Number	Transmit Rate (Guaranteed Minimum Bandwidth)	Shaping Rate (Maximum Bandwidth)	Excess Bandwidth Sharing	Priority	Buffer Size
best-effort forwarding class scheduler (queue 0)	5% 15% (QFX10000, NFX Series)	None	5% 15% (QFX10000, NFX Series)	low	5% 15% (QFX10000, NFX Series)
fcoe forwarding class scheduler (queue 3)	35%	None	35%	low	35%
no-loss forwarding class scheduler (queue 4)	35%	None	35%	low	35%
network-control forwarding class scheduler (queue 7)	5% 15% (QFX10000, NFX Series)	None	5% 15% (QFX10000, NFX Series)	low	5% 15% (QFX10000, NFX Series)
(Excluding QFX10000 and NFX Series) mcast forwarding class scheduler (queue 8)	20%	None	20%	low	20%

NOTE: By default, the minimum guaranteed bandwidth (transmit rate) determines the amount of excess (extra) bandwidth that a queue can share. Extra bandwidth is allocated to queues in proportion to the transmit rate of each queue. On switches that support the excess-rate statement, you can override the default setting and configure the excess bandwidth percentage independently of the transmit rate on queues that are not strict-high priority queues.

By default, only the four (QFX10000 switches and NFX Series devices) or five (other switches) default schedulers shown in Table 37 on page 84 have traffic mapped to them. Only the forwarding classes and queues associated with the default schedulers receive default bandwidth, based on the default scheduler transmit rate. (You can configure schedulers and forwarding classes to allocate bandwidth to other queues or to change the bandwidth and other scheduling properties of a default queue.)

On QFX10000 switches and NFX Series devices, if a forwarding class does not transport traffic, the bandwidth allocated to that forwarding class is available to other forwarding classes. Unicast and multidestination (multicast, broadcast, and destination lookup fail) traffic use the same forwarding classes and output queues.

Copyright © 2018, Juniper Networks, Inc.

On switches other than QFX10000 and NFX Series devices, multidestination queue 11 receives enough bandwidth from the default multidestination scheduler to handle CPU-generated multidestination traffic.

On QFX10000 and NFX Series devices, default scheduling is port scheduling. Default hierarchical scheduling, known as enhanced transmission selection (ETS, defined in IEEE 802.1Qaz), allocates the total port bandwidth to the four default forwarding classes served by the four default schedulers, as defined by the four default schedulers. The result is the same as direct port scheduling. Configuring hierarchical port scheduling, however, enables you to group forwarding classes that carry similar types of traffic into forwarding class sets (also called priority groups),and to assign port bandwidth to each forwarding class set. The port bandwidth assigned to the forwarding class set is then assigned to the forwarding classes within the forwarding class set. This hierarchy enables you to control port bandwidth allocation with greater granularity, and enables hierarchical sharing of extra bandwidth to better utilize link bandwidth.

Except on QFX10000 switches and NFX Series devices, default hierarchical scheduling divides the total port bandwidth between two groups of traffic: unicast traffic and multidestination traffic. By default, unicast traffic consists of queue 0 (**best-effort** forwarding class), queue 3 (**fcoe** forwarding class), queue 4 (**no-loss** forwarding class), and queue 7 (**network-control** forwarding class). Unicast traffic receives and shares a total of 80 percent of the port bandwidth. By default, multidestination traffic (**mcast** queue 8) receives a total of 20 percent of the port bandwidth. So on a 10-Gigabit port, unicast traffic receives 8-Gbps of bandwidth and multidestination traffic receives 2-Gbps of bandwidth.

NOTE: **Except on QFX5200, QFX5210, and QFX10000 switches and NFX Series devices, which do not support queue 11, multidestination queue 11 also receives a small amount of default bandwidth from the multidestination scheduler. CPU-generated multidestination traffic uses queue 11, so you might see a small number of packets egress from queue 11. In addition, in the unlikely case that firewall filter match conditions map multidestination traffic to a unicast forwarding class, that traffic uses queue 11.**

Default scheduling uses weighted round-robin (WRR) scheduling. Each queue receives a portion (weight) of the total available interface bandwidth. The scheduling weight is based on the transmit rate of the default scheduler for that queue. For example, queue 7 receives a default scheduling weight of 5 percent, or 15 percent on QFX10000 and NFX Series devices, of the available bandwidth, and queue 4 receives a default scheduling weight of 35 percent of the available bandwidth. Queues are mapped to forwarding classes, so forwarding classes receive the default bandwidth for the queues to which they are mapped.

On QFX10000 switches and NFX Series devices, for example, queue 7 is mapped to the network-control forwarding class and queue 4 is mapped to the no-loss forwarding class. Each forwarding class receives the default bandwidth for the queue to which it is mapped. Unused bandwidth is shared with other default queues.

Copyright © 2018, Juniper Networks, Inc.

If you want non-default (unconfigured) queues to forward traffic, you should explicitly map traffic to those queues (configure the forwarding classes and queue mapping) and create schedulers to allocate bandwidth to those queues. By default, queues 1, 2, 5, and 6 are unconfigured.

Except on QFX5200, QFX5210, and QFX10000 switches and NFX Series devices, which do not support them, multidestination queues 9, 10, and 11 are unconfigured. Unconfigured queues have a default scheduling weight of 1 so that they can receive a small amount of bandwidth in case they need to forward traffic. However, queue 11 can use more of the default multidestination scheduler bandwidth if necessary to handle CPU-generated multidestination traffic.

NOTE: All four (two on QFX5200 and QFX5210 switches) multidestination queues have a scheduling weight of 1. Because by default multidestination traffic goes to queue 8, queue 8 receives almost all of the multidestination bandwidth. (There is no traffic on queue 9 and queue 10, and very little traffic on queue 11, so there is almost no competition for multidestination bandwidth.)

However, if you explicitly configure queue 9, 10, or 11 (by mapping code points to the unconfigured multidestination forwarding classes using the multidestination classifier), the explicitly configured queues share the multidestination scheduler bandwidth equally with default queue 8, because all of the queues have the same scheduling weight (1). To ensure that multidestination bandwidth is allocated to each queue properly and that the bandwidth allocation to the default queue (8) is not reduced too much, we strongly recommend that you configure a scheduler if you explicitly classify traffic into queue 9, 10, or 11.

If you map traffic to an unconfigured queue, the queue receives only the amount of excess bandwidth proportional to its default weight (1). The actual amount of bandwidth an unconfigured queue gets depends on how much bandwidth the other queues are using.

If some queues use less than their allocated amount of bandwidth, the unconfigured queues can share the unused bandwidth. Sharing unused bandwidth is one of the key advantages of hierarchical port scheduling. Configured queues have higher priority for bandwidth than unconfigured queues, so if a configured queue needs more bandwidth, then less bandwidth is available for unconfigured queues. Unconfigured queues always receive a minimum amount of bandwidth based on their scheduling weight (1). If you map traffic to an unconfigured queue, to allocate bandwidth to that queue, configure a scheduler for the forwarding class that is mapped to the queue.

Default DCBX Advertisement

When you configure hierarchical scheduling on an interface, DCBX advertises each priority group, the priorities in each priority group, and the bandwidth properties of each priority and priority group.

Copyright © 2018, Juniper Networks, Inc.

If you do not configure hierarchical scheduling on an interface, DCBX advertises the automatically created default priority group and its priorities. DCBX also advertises the default bandwidth allocation of the priority group, which is 100 percent of the port bandwidth.

Default Scheduling and Classification Summary

If you do not configure scheduling on an interface:

- Default classifiers classify ingress traffic.
- Default schedulers schedule egress traffic.
- DCBX advertises a single default priority group with 100 percent of the port bandwidth allocated to that priority group. All priorities (forwarding classes) are assigned to the default priority group and receive bandwidth based on their default schedulers. The default priority group is generated automatically and is not user-configurable.

Related Documentation

- Understanding CoS Packet Flow on page 25
- Understanding CoS Hierarchical Port Scheduling (ETS) on page 192
- Understanding Default CoS Settings on page 27
- *Understanding CoS Virtual Output Queues (VOQs) on QFX10000 Switches*
- Understanding Applying CoS Classifiers and Rewrite Rules to Interfaces on page 87
- Understanding DCB Features and Requirements on page 376
- Understanding Default CoS Scheduling on QFabric System Interconnect Devices (Junos OS Release 13.1 and Later Releases) on page 265
- Example: Configuring Unicast Classifiers on page 72
- Example: Configuring Queue Schedulers on page 169

Understanding Applying CoS Classifiers and Rewrite Rules to Interfaces

At ingress interfaces, classifiers group incoming traffic into classes based on the IEEE 802.1p, DSCP, or MPLS EXP class of service (CoS) code point bits in the packet header. At egress interfaces, you can use rewrite rules to change (re-mark) the code point bits before the interface forwards the packets.

You can apply classifiers and rewrite rules to interfaces to control the level of CoS applied to each packet as it traverses the system and the network. This topic describes:

- Supported Classifier and Rewrite Rule Types on page 88
- Ethernet Interfaces Supported for Classifier and Rewrite Rule Configuration on page 90
- Default Classifiers on page 93
- Default Rewrite Rules on page 93
- Classifier Precedence on page 93

- Classifier Behavior and Limitations on page 95
- Rewrite Rule Precedence and Behavior on page 96
- Classifier and Rewrite Rule Configuration Interaction with Ethernet Interface Configuration on page 97

Supported Classifier and Rewrite Rule Types

Table 38 on page 88 shows the supported types of classifiers and rewrite rules supports:

Table 38: Supported Classifiers and Rewrite Rules

Classifier or Rewrite Rule Type	Description
Fixed classifier	Classifies all ingress traffic on a physical interface into one fixed forwarding class, regardless of the CoS bits in the packet header.
DSCP and DSCP IPv6 unicast classifiers	Classifies IP and IPv6 traffic into forwarding classes and assigns loss priorities to the traffic based on DSCP code point bits.
IEEE 802.1p unicast classifier	Classifies Ethernet traffic into forwarding classes and assigns loss priorities to the traffic based on IEEE 802.1p code point bits.
MPLS EXP classifier	Classifies MPLS traffic into forwarding classes and assigns loss priorities to the traffic on interfaces configured as **family mpls**. QFX5200, QFX5100, EX4600, QFX3500, and QFX3600 switches, and QFabric systems, use one global EXP classifier on all **family mpls** switch interfaces. QFX10000 switches do not support global EXP classifiers. You can apply the same EXP classifier or different EXP classifiers to different **family mpls** interfaces.
DSCP multidestination classifier (also used for IPv6 multidestination traffic) NOTE: This applies only to switches that use different classifiers for unicast and multidestination traffic. It does not apply to switches that use the same classifiers for unicast and multidestination traffic.	Classifies IP and IPv6 multicast, broadcast, and destination lookup fail (DLF) traffic into multidestination forwarding classes. Multidestination classifiers are applied to all interfaces and cannot be applied to individual interfaces.
IEEE 802.1p multidestination classifier NOTE: This applies only to switches that use different classifiers for unicast and multidestination traffic. It does not apply to switches that use the same classifiers for unicast and multidestination traffic.	Classifies Ethernet multicast, broadcast, and destination lookup fail (DLF) traffic into multidestination forwarding classes. Multidestination classifiers are applied to all interfaces and cannot be applied to individual interfaces.

Copyright © 2018, Juniper Networks, Inc.

Table 38: Supported Classifiers and Rewrite Rules (continued)

Classifier or Rewrite Rule Type	Description
DSCP and DSCP IPv6 rewrite rules	Re-marks the DSCP code points of IP and IPv6 packets before forwarding the packets.
IEEE 802.1p rewrite rule	Re-marks the IEEE 802.1p code points of Ethernet packets before forwarding the packets.
MPLS EXP rewrite rule	Re-marks the EXP code points of MPLS packets before forwarding the packets on interfaces configured as **family mpls**.

NOTE: On switches that support native Fibre Channel (FC) interfaces, you can specify a rewrite value on native FC interfaces (NP_Ports) to set the IEEE 802.1p code point of incoming FC traffic when the NP_Port encapsulates the FC packet in Ethernet before forwarding it to the FCoE network (see "Understanding CoS IEEE 802.1p Priority Remapping on an FCoE-FC Gateway" on page 519).

DSCP, IEEE 802.1p, and MPLS EXP classifiers are behavior aggregate (BA) classifiers. On QFX5100, QFX5200, EX4600, QFX3500, and QFX3600 switches, and on QFabric systems, unlike DSCP and IEEE 802.1p classifiers, EXP classifiers are global and apply only to all interfaces that are configured as **family mpls**. On QFX10000 switches, you apply EXP classifiers to individual logical interfaces, and different interfaces can use different EXP classifiers.

Unlike DSCP and IEEE 802.1p BA classifiers, there is no default EXP classifier. Also unlike DSCP and IEEE 802.1p classifiers, for MPLS traffic on **family mpls** interfaces only, EXP classifiers overwrite fixed classifiers. (An interface that has a fixed classifier uses the EXP classifier for MPLS traffic, not the fixed classifier, and the fixed classifier is used for all other traffic.)

On switches that use different classifiers for unicast and multidestination traffic, multidestination classifiers are global and apply to all interfaces; you cannot apply a multidestination classifier to individual interfaces.

Classifying packets into forwarding classes assigns packets to the output queues mapped to those forwarding classes. The traffic classified into a forwarding class receives the CoS scheduling configured for the output queue mapped to that forwarding class.

NOTE: In addition to BA classifiers and fixed classifiers, which classify traffic based on the CoS field in the packet header, you can use firewall filters to configure multifield (MF) classifiers. MF classifiers classify traffic based on more than one field in the packet header and take precedence over BA and fixed classifiers.

Ethernet Interfaces Supported for Classifier and Rewrite Rule Configuration

To apply a classifier to incoming traffic or a rewrite rule to outgoing traffic, you need to apply the classifier or rewrite rule to one or more interfaces. When you apply a classifier or rewrite rule to an interface, the interface uses the classifier to group incoming traffic into forwarding classes and uses the rewrite rule to re-mark the CoS code point value of each packet before it leaves the system.

Not all interfaces types support all types of CoS configuration. This section describes:

- Interface Types That Support Classifier and Rewrite Rule Configuration on page 90
- Classifier and Rewrite Rule Physical and Logical Ethernet Interface Support on page 90
- Routed VLAN Interfaces (RVIs) and Integrated Routing and Bridging (IRB) Interfaces on page 92

Interface Types That Support Classifier and Rewrite Rule Configuration

You can apply classifiers and rewrite rules to Ethernet interfaces. For Layer 3 LAGs, configure BA or fixed classifiers on the LAG (ae) interface. The classifier configured on the LAG is valid on all of the LAG member interfaces.

On switches that support native FC interfaces, you can apply fixed classifiers to native FC interfaces (NP_Ports). You cannot apply other types of classifiers or rewrite rules to native FC interfaces. You can rewrite the value of the IEEE 802.1p code point of incoming FC traffic when the interface encapsulates it in Ethernet before forwarding it to the FCoE network as described in "Understanding CoS IEEE 802.1p Priority Remapping on an FCoE-FC Gateway" on page 519.

Classifier and Rewrite Rule Physical and Logical Ethernet Interface Support

The Ethernet ports can function as:

- Layer 2 physical interfaces (family ethernet-switching)
- Layer 2 logical interfaces (family ethernet-switching)
- Layer 3 physical interfaces (family inet/inet6)
- Layer 3 logical interfaces (family inet/inet6)
- MPLS interfaces (family mpls)

You can apply CoS classifiers and rewrite rules only to the following interfaces:

- Layer 2 logical interface unit 0

  NOTE: **On a Layer 2 interface, the CoS you configure on logical interface unit 0 applies to all of the logical units on that interface.**

- On QFX5100, QFX5200, EX4600, QFX3500, and QFX3600 switches, and on QFabric systems, Layer 3 physical interfaces if at least one logical Layer 3 interface is configured on the physical interface

Copyright © 2018, Juniper Networks, Inc.

NOTE: The CoS you configure on a Layer 3 physical interface is applied to all of the Layer 3 logical interfaces on that physical interface. This means that each Layer 3 interface uses the same classifiers and rewrite rules for all of the Layer 3 traffic on that interface.

- On QFX10000 switches, Layer 3 logical interfaces. You can apply different classifiers and rewrite rules to different Layer 3 logical interfaces.

Ethernet Interface Support for Most QFX Series Switches, and QFabric Systems

You cannot apply classifiers or rewrite rules to Layer 2 physical interfaces or to Layer 3 logical interfaces. Table 39 on page 91 shows on which interfaces you can configure and apply classifiers and rewrite rules.

NOTE: The CoS feature support listed in this table is identical on single interfaces and aggregated Ethernet interfaces.

Table 39: Ethernet Interface Support for Classifier and Rewrite Rule Configuration (QFX5100, QFX5200, EX4600, QFX3500, and QFX3600 Switches, and QFabric Systems)

CoS Classifiers and Rewrite Rules	Layer 2 Physical Interfaces	Layer 2 Logical Interface (Unit 0 Only)	Layer 3 Physical Interfaces (If at Least One Logical Layer 3 Interface Is Defined)	Layer 3 Logical Interfaces
Fixed classifier	No	Yes	Yes	No
DSCP classifier	No	Yes	Yes	No
DSCP IPv6 classifier	No	Yes	Yes	No
IEEE 802.1p classifier	No	Yes	Yes	No
EXP classifier	Global classifier, applies only to all switch interfaces that are configured as **family mpls**. Cannot be configured on individual interfaces.			
DSCP rewrite rule	No	Yes	Yes	No
DSCP IPv6 rewrite rule	No	Yes	Yes	No
IEEE 802.1p rewrite rule	No	Yes	Yes	No
EXP rewrite rule	No	Yes	Yes	No

Copyright © 2018, Juniper Networks, Inc.

NOTE: IEEE 802.1p mutidestination and DSCP multidestination classifiers are applied to all interfaces and cannot be applied to individual interfaces. No DSCP IPv6 multidestination classifier is supported. IPv6 multidestination traffic uses the DSCP multidestination classifier.

Ethernet Interface Support for QFX10000 Switches

You cannot apply classifiers or rewrite rules to Layer 2 or Layer 3 physical interfaces. You can apply classifiers and rewrite rules only to Layer 2 logical interface unit 0. You can apply different classifiers and rewrite rules to different Layer 3 logical interfaces. Table 40 on page 92 shows on which interfaces you can configure and apply classifiers and rewrite rules.

NOTE: The CoS feature support listed in this table is identical on single interfaces and aggregated Ethernet interfaces.

Table 40: Ethernet Interface Support for Classifier and Rewrite Rule Configuration (QFX10000 Switches)

CoS Classifiers and Rewrite Rules	Layer 2 Physical Interfaces	Layer 2 Logical Interface (Unit 0 Only)	Layer 3 Physical Interfaces	Layer 3 Logical Interfaces
Fixed classifier	No	Yes	No	Yes
DSCP classifier	No	Yes	No	Yes
DSCP IPv6 classifier	No	Yes	No	Yes
IEEE 802.1p classifier	No	Yes	No	Yes
EXP classifier	No	Yes	No	Yes
DSCP rewrite rule	No	Yes	No	Yes
DSCP IPv6 rewrite rule	No	Yes	No	Yes
IEEE 802.1p rewrite rule	No	Yes	No	Yes
EXP rewrite rule	No	Yes	No	Yes

Routed VLAN Interfaces (RVIs) and Integrated Routing and Bridging (IRB) Interfaces

You cannot apply classifiers and rewrite rules directly to routed VLAN interfaces (RVIs) or integrated routing and bridging (IRB) interfaces because the members of RVIs and IRBs are VLANs, not ports. However, you can apply classifiers and rewrite rules to the VLAN port members of an RVI or an IRB. You can also apply MF classifiers to RVIs and IRBs.

Copyright © 2018, Juniper Networks, Inc.

Default Classifiers

If you do not explicitly configure classifiers on an Ethernet interface, the switch applies default classifiers so that the traffic receives basic CoS treatment. The factors that determine the default classifier applied to the interface include the interface type (Layer 2 or Layer 3), the port mode (trunk, tagged-access, or access), and whether logical interfaces have been configured.

The switch applies default classifiers using the following rules:

- If the physical interface has at least one Layer 3 logical interface configured, the logical interfaces use the default DSCP classifier.
- If the physical interface has a Layer 2 logical interface in trunk mode or tagged-access mode, it uses the default IEEE 802.1p trusted classifier.

  NOTE: **Tagged-access mode is available only on QFX3500 and QFX3600 devices when used as standalone switches or as QFabric system Node devices.**

- If the physical interface has a Layer 2 logical interface in access mode, it uses the default IEEE 802.1p untrusted classifier.
- If the physical interface has no logical interface configured, no default classifier is applied.
- On switches that use different classifiers for unicast and multidestination traffic, the default multidestination classifier is the IEEE 802.1p multidestination classifier.
- There is no default MPLS EXP classifier. If you want to classify MPLS traffic using EXP bits on these switches, on QFX10000 switches, configure an EXP classifier and apply it to a logical interface that is configured as **family mpls**. On QFX5100, QFX5200, EX4600, QFX3500 and QFX3600 switches, and on QFabric systems, configure an EXP classifier and configure it as the global system default EXP classifier.

Default Rewrite Rules

No default rewrite rules are applied to interfaces. If you want to re-mark packets at the egress interface, you must explicitly configure a rewrite rule.

Classifier Precedence

You can apply multiple classifiers (MF, fixed, IEEE 802.1p, DSCP, or EXP) to an Ethernet interface to handle different types of traffic. (EXP classifiers are global and apply only to all MPLS traffic on all **family mpls** interfaces.) When you apply more than one classifier to an interface, the system uses an order of precedence to determine which classifier to use on interfaces:

- Classifier Precedence on Physical Ethernet Interfaces (QFX5200, QFX5100, EX4600, QFX3500, and QFX3600 Switches, and QFabric Systems) on page 94
- Classifier Precedence on Logical Ethernet Interfaces (All Switches) on page 94

Classifier Precedence on Physical Ethernet Interfaces (QFX5200, QFX5100, EX4600, QFX3500, and QFX3600 Switches, and QFabric Systems)

QFX10000 switches do not support configuring classifiers on physical interfaces. The precedence of classifiers on physical interfaces, from the highest-priority classifier to the lowest-priority classifier, is:

- MF classifier on a logical interface (no classifier has a higher priority than MF classifiers)
- Fixed classifier on the physical interface
- DSCP or DSCP IPv6 classifier on the physical interface
- IEEE 802.1p classifier on the physical interface

NOTE: If an EXP classifier is configured, MPLS traffic uses the EXP classifier on all **family mpls** interfaces, even if an MF or fixed classifier is applied to the interface. If an EXP classifier is not configured, then if a fixed classifier is applied to the interface, the MPLS traffic uses the fixed classifier. If no EXP classifier and no fixed classifier is applied to the interface, MPLS traffic is treated as best-effort traffic. DSCP classifiers are not applied to MPLS traffic.

You can apply a DSCP classifier, an IEEE 802.1p classifier, and an EXP classifier on a physical interface. When all three classifiers are on an interface, IP traffic uses the DSCP classifier, MPLS traffic on **family mpls** interfaces uses the EXP classifier, and all other traffic uses the IEEE classifier.

NOTE: You cannot apply a fixed classifier and a DSCP or IEEE classifier to the same interface. If a DSCP classifier, an IEEE classifier, or both are on an interface, you cannot apply a fixed classifier to that interface unless you first delete the DSCP and IEEE classifiers. If a fixed classifier is on an interface, you cannot apply a DSCP classifier or an IEEE classifier unless you first delete the fixed classifier.

Classifier Precedence on Logical Ethernet Interfaces (All Switches)

The precedence of classifiers on logical interfaces, from the highest priority classifier to the lowest priority classifier, is:

- MF classifier on a logical interface (no classifier has a higher priority than MF classifiers).
- Fixed classifier on the logical interface.
- DSCP or DSCP IPv6 classifier on the physical or logical interface..
- IEEE 802.1p classifier on the physical or logical interface.

Copyright © 2018, Juniper Networks, Inc.

NOTE: If a global EXP classifier is configured, MPLS traffic uses the EXP classifier on all **family mpls** interfaces, even if a fixed classifier is applied to the interface. If a global EXP classifier is not configured, then:

- If a fixed classifier is applied to the interface, the MPLS traffic uses the fixed classifier. If no EXP classifier and no fixed classifier is applied to the interface, MPLS traffic is treated as best-effort traffic.

You can apply both a DSCP classifier and an IEEE 802.1p classifier on a logical interface. When both a DSCP and an IEEE classifier are on an interface, IP traffic uses the DSCP classifier, and all other traffic uses the IEEE classifier. Only MPLS traffic on interfaces configured as **family mpls** uses the EXP classifier.

Classifier Behavior and Limitations

Consider the following behaviors and constraints when you apply classifiers to Ethernet interfaces. Behaviors for applying classifiers to physical interfaces do not pertain to QFX10000 switches.

- You can configure only one DSCP classifier (IP or IPv6) on a physical interface. You cannot configure both types of DSCP classifier on one physical interface. Both IP and IPv6 traffic use whichever DSCP classifier is configured on the interface.
- When you configure a DSCP or a DSCP IPv6 classifier on a physical interface and the physical interface has at least one logical Layer 3 interface, all packets (IP, IPv6, and non-IP) use that classifier.
- An interface with both a DSCP classifier (IP or IPv6) and an IEEE 802.1p classifier uses the DSCP classifier for IP and IPv6 packets, and uses the IEEE classifier for all other packets.
- Fixed classifiers and BA classifiers (DSCP and IEEE classifiers) are not permitted simultaneously on an interface. If you configure a fixed classifier on an interface, you cannot configure a DSCP or an IEEE classifier on that interface. If you configure a DSCP classifier, an IEEE classifier, or both classifiers on an interface, you cannot configure a fixed classifier on that interface.
- When you configure an IEEE 802.1p classifier on a physical interface and a DSCP classifier is not explicitly configured on that interface, the interface uses the IEEE classifier for all types of packets. No default DSCP classifier is applied to the interface. (In this case, if you want a DSCP classifier on the interface, you must explicitly configure it and apply it to the interface.)
- The system does not apply a default classifier to a physical interface until you create a logical interface on that physical interface. If you configure a Layer 3 logical interface, the system uses the default DSCP classifier. If you configure a Layer 2 logical interface, the system uses the default IEEE 802.1p trusted classifier if the port is in trunk mode or tagged-access mode, or the default IEEE 802.1p untrusted classifier if the port is in access mode.

Copyright © 2018, Juniper Networks, Inc.

- MF classifiers configured on logical interfaces take precedence over BA and fixed classifiers, with the exception of the global EXP classifier, which is always used for MPLS traffic on **family mpls** interfaces. (Use firewall filters to configure MF classifiers.) When BA or fixed classifiers are present on an interface, you can still configure an MF classifier on that interface.
- There is no default EXP classifier for MPLS traffic.
- You can configure up to 64 EXP classifiers. On QFX10000 switches, you can apply different EXP classifiers to different interfaces.

  However, on On QFX5200, QFX5100, EX4600, QFX3500, and QFX3600 switches, and on QFabric systems, the switch uses only one MPLS EXP classifier as a global classifier on all **family mpls** interfaces. After you configure an MPLS EXP classifier, you can configure it as the global EXP classifier by including the EXP classifier in the **[edit class-of-service system-defaults classifiers exp]** hierarchy level.

  All **family mpls** switch interfaces use the EXP classifier specified using this configuration statement to classify MPLS traffic, even on interfaces that have a fixed classifier. No other traffic uses the EXP classifier.

Rewrite Rule Precedence and Behavior

The following rules apply on Ethernet interfaces for rewrite rules:

- If you configure one DSCP (or DSCP IPv6) rewrite rule and one IEEE 802.1p rewrite rule on an interface, both rewrite rules take effect. Traffic with IP and IPv6 headers use the DSCP rewrite rule, and traffic with a VLAN tag uses the IEEE rewrite rule.
- If you do not explicitly configure a rewrite rule, there is no default rewrite rule, so the system does not apply any rewrite rule to the interface.
- You can apply a DSCP rewrite rule or a DSCP IPv6 rewrite rule to an interface, but you cannot apply both a DSCP and a DSCP IPv6 rewrite rule to the same interface. Both IP and IPv6 packets use the same DSCP rewrite rule, regardless of whether the configured rewrite rule is DSCP or DSCP IPv6.
- MPLS EXP rewrite rules apply only to logical interfaces on **family mpls** interfaces. You cannot apply to an EXP rewrite rule to a physical interface. You can configure up to 64 EXP rewrite rules, but you can only use 16 EXP rewrite rules at any time on the switch.
- A logical interface can use both DSCP (or DSCP IPv6) and EXP rewrite rules.
- DSCP and DSCP IPv6 rewrite rules are not applied to MPLS traffic.
- If the switch is performing penultimate hop popping (PHP), EXP rewrite rules do not take effect. If both an EXP classifier and an EXP rewrite rule are configured on the switch, then the EXP value from the last popped label is copied into the inner label. If either an EXP classifier or an EXP rewrite rule (but not both) is configured on the switch, then the inner label EXP value is sent unchanged.

Copyright © 2018, Juniper Networks, Inc.

NOTE: On each physical interface, either all forwarding classes that are being used on the interface must have rewrite rules configured or no forwarding classes that are being used on the interface can have rewrite rules configured. On any physical port, do not mix forwarding classes with rewrite rules and forwarding classes without rewrite rules.

NOTE: Rewrite rules are applied *before* the egress filter is matched to traffic. Because the code point rewrite occurs before the egress filter is matched to traffic, the egress filter match is based on the rewrite value, not on the original code point value in the packet.

Classifier and Rewrite Rule Configuration Interaction with Ethernet Interface Configuration

On QFX5100, QFX5200, EX4600, QFX3500, and QFX3600 switches used as standalone switches or as QFabric system Node devices, you can apply classifiers and rewrite rules only on Layer 2 logical interface unit 0 and Layer 3 physical interfaces (if the Layer 3 physical interface has at least one defined logical interface). On QFX10000 switches, you can apply classifiers and rewrite rules only to Layer 2 logical interface unit 0 and to Layer 3 logical interfaces. This section focuses on BA classifiers, but the interaction between BA classifiers and interfaces described in this section also applies to fixed classifiers and rewrite rules.

NOTE: On QFX5100, QFX5200, EX4600, QFX3500, and QFX3600 switches used as standalone switches or as QFabric system Node devices, EXP classifiers, are global and apply to all switch interfaces. See "Defining CoS BA Classifiers (DSCP, DSCP IPv6, IEEE 802.1p)" on page 69 for how to configure multidestination classifiers and see *Configuring a Global MPLS EXP Classifier* for how to configure EXP classifiers.

On switches that use different classifiers for unicast and multidestination traffic, multidestination classifiers are global and apply to all switch interfaces.

There are two components to applying classifiers or rewrite rules to interfaces:

1. Setting the interface family (inet, inet6, or ethernet-switching; ethernet-switching is the default interface family) in the **[edit interfaces]** configuration hierarchy.
2. Applying a classifier or rewrite rule to the interface in the **[edit class-of-service]** hierarchy.

These are separate operations that can be set and committed at different times. Because the type of classifier or rewrite rule you can apply to an interface depends on the interface family configuration, the system performs checks to ensure that the configuration is valid. The method the system uses to notify you of an invalid configuration depends on the **set** operation that causes the invalid configuration.

NOTE: QFX10000 switches cannot be misconfigured in the following two ways because you can configure classifiers only on logical interfaces. Only switches that allow classifier configuration on physical and logical interfaces can experience the following misconfigurations.

If applying the classifier or rewrite rule to the interface in the **[edit class-of-service]** hierarchy causes an invalid configuration, the system rejects the configuration and returns a commit check error.

If setting the interface family in the **[edit interfaces]** configuration hierarchy causes an invalid configuration, the system creates a syslog error message. If you receive the error message, you need to remove the classifier or rewrite rule configuration from the logical interface and apply it to the physical interface, or remove the classifier or rewrite rule configuration from the physical interface and apply it to the logical interface. For classifiers, if you do not take action to correct the error, the system programs the default classifier for the interface family on the interface. (There are no default rewrite rules. If the commit check fails, no rewrite rule is applied to the interface.)

Two scenarios illustrate these situations:

- Applying a classifier to an Ethernet interface causes a commit check error
- Configuring the Ethernet interface family causes a syslog error

These scenarios differ on different switches because some switches support classifiers on physical Layer 3 interfaces but not on logical Layer 3 interfaces, while other switches support classifiers on logical Layer 3 interfaces but not on physical Layer 3 interfaces.

Two scenarios illustrate these situations:

- QFX5100, QFX5200, EX4600, QFX3500, and QFX3600 Switch Scenarios on page 98

NOTE: Both of these scenarios also apply to fixed classifiers and rewrite rules.

QFX5100, QFX5200, EX4600, QFX3500, and QFX3600 Switch Scenarios

The following scenarios also apply the QFX5100, QFX5200, EX4600, QFX3500, and QFX3600 switches when they are used as QFabric system Node devices.

Scenario 1: Applying a Classifier to an Ethernet Interface Causes a Commit Check Error

In Scenario 1, we set the interface family, and then specify an invalid classifier.

1. Set and commit the interface as a Layer 3 (family **inet**) interface:

```
[edit interfaces]
user@switch# set xe-0/0/20 unit 0 family inet
user@switch# commit
```


Copyright © 2018, Juniper Networks, Inc.

This commit operation succeeds.

2. Set and commit a DSCP classifier on the logical interface (this example uses a DSCP classifier named **dscp1**):

```
[edit class-of-service]
user@switch# set interfaces xe-0/0/20 unit 0 classifiers dscp dscp1
user@switch# commit
```

This configuration is not valid, because it attempts to apply a classifier to a Layer 3 logical interface. Because the failure is caused by the class-of-service configuration and not by the interface configuration, the system rejects the commit operation and issues a commit error, not a syslog message.

Note that the commit operation succeeds if you apply the classifier to the physical Layer 3 interface as follows:

```
[edit class-of-service]
user@switch# set interfaces xe-0/0/20 classifiers dscp dscp1
user@switch# commit
```

Because the logical unit is not specified, the classifier is applied to the physical Layer 3 interface in a valid configuration, and the commit check succeeds.

Scenario 2: Configuring the Ethernet Interface Family Causes a Syslog Error

In Scenario 2, we set the classifier first, and then set an invalid interface type.

1. Set and commit a DSCP classifier on a logical interface that has no existing configuration:

```
[edit class-of-service]
user@switch# set interfaces xe-0/0/20 unit 0 classifiers dscp dscp1
user@switch# commit
```

This commit succeeds. Because no explicit configuration existed on the interface, it is by default a Layer 2 (**family ethernet-switching**) interface. Layer 2 logical interfaces support BA classifiers, so applying the classifier is a valid configuration.

2. Set and commit the interface as a Layer 3 interface (family **inet**) interface:

```
[edit interfaces]
user@switch# set xe-0/0/20 unit 0 family inet
user@switch# commit
```

This configuration is not valid because it attempts to change an interface from Layer 2 (**family ethernet-switching**) to Layer 3 (**family inet**) when a classifier has already been applied to a logical interface. Layer 3 logical interfaces do not support classifiers. Because the failure is caused by the interface configuration and not by the class-of-service configuration, the system does not issue a commit error, but instead issues a syslog message.

When the system issues the syslog message, it programs the default classifier for the interface type on the interface. In this scenario, the interface has been configured as a Layer 3 interface, so the system applies the default DSCP profile to the physical Layer 3 interface.

In this scenario, to install a configured DSCP classifier, remove the misconfigured classifier from the Layer 3 logical interface and apply it to the Layer 3 physical interface. For example:

```
[edit]
user@switch# delete class-of-service interfaces xe-0/0/20 unit 0 classifiers dscp dscp1
user@switch# commit
user@switch# set class-of-service interfaces xe-0/0/20 classifiers dscp dscp1
user@switch# commit
```

Related Documentation

- Understanding CoS Packet Flow on page 25
- Configuring CoS on page 13

Understanding CoS Code-Point Aliases

A code-point alias assigns a name to a pattern of code-point bits. You can use this name instead of the bit pattern when you configure other CoS components such as classifiers and rewrite rules.

NOTE: This topic applies to all EX Series switches except the EX4600. Because the EX4600 uses a different chipset than other EX Series switches, the code-point aliases on EX4600 match those on QFX Series switches. For EX4600 code-point aliases, see "Understanding CoS Code-Point Aliases" on page 100.

Behavior aggregate classifiers use class-of-service (CoS) values such as Differentiated Services Code Points (DSCPs) or IEEE 802.1 bits to associate incoming packets with a particular forwarding class and the CoS servicing level associated with that forwarding class. You can assign a meaningful name or alias to the CoS values and use that alias instead of bits when configuring CoS components. These aliases are not part of the specifications but are well known through usage. For example, the alias for DSCP 101110 is widely accepted as ef (expedited forwarding).

When you configure forwarding classes and define classifiers, you can refer to the markers by alias names. You can configure code point alias names for user-defined classifiers. If the value of an alias changes, it alters the behavior of any classifier that references it.

You can configure code-point aliases for the following type of CoS markers:

- dscp or dscp-ipv6—Handles incoming IP and IPv6 packets.
- ieee-802.1—Handles Layer 2 frames.

 Copyright © 2018, Juniper Networks, Inc.

Table 41 on page 101 shows the default mapping of code-point aliases to IEEE code points.

Table 41: Default IEEE 802.1 Code-Point Aliases

CoS Value Types	Mapping
be	000
be1	001
ef	010
ef1	011
af11	100
af12	101
nc1	110
nc2	111

Table 42 on page 101 shows the default mapping of code-point aliases to DSCP and DSCP IPv6 code points.

Table 42: Default DSCP and DSCP IPv6 Code-Point Aliases

CoS Value Types	Mapping
ef	101110
af11	001010
af12	001100
af13	001110
af21	010010
af22	010100
af23	010110
af31	011010
af32	011100
af33	011110
af41	100010

Copyright © 2018, Juniper Networks, Inc.

Table 42: Default DSCP and DSCP IPv6 Code-Point Aliases (continued)

CoS Value Types	Mapping
af42	100100
af43	100110
be	000000
cs1	001000
cs2	010000
cs3	011000
cs4	100000
cs5	101000
nc1	110000
nc2	111000

Related Documentation

- Understanding Junos CoS Components on page 17
- Defining CoS Code-Point Aliases on page 103

Copyright © 2018, Juniper Networks, Inc.

Defining CoS Code-Point Aliases

You can use code-point aliases to streamline the process of configuring CoS features on your switch. A code-point alias assigns a name to a pattern of code-point bits. You can use this name instead of the bit pattern when you configure other CoS components such as classifiers and rewrite rules.

You can configure code-point aliases for the following CoS marker types:

- DSCP or DSCP IPv6—Handles incoming IPv4 or IPv6 packets.
- IEEE 802.1p—Handles Layer 2 frames.

To configure a code-point alias:

1. Specify a CoS marker type (IEEE 802.1 or DSCP).
2. Assign an alias.
3. Specify the code point that corresponds to the alias.

```
[edit class-of-service code-point-aliases]
user@switch# set (dscp | dscp-ipv6 | ieee-802.1) alias-name code-point-bits
```

For example, to configure a code-point alias for an IEEE 802.1 CoS marker type that has the alias name be2 and maps to the code-point bits 001:

```
[edit class-of-service code-point-aliases]
user@switch# set ieee-802.1 be2 001
```

Related Documentation

- Monitoring CoS Code-Point Value Aliases on page 826
- Understanding CoS Code-Point Aliases on page 100

Understanding CoS Forwarding Classes

Copyright © 2018, Juniper Networks, Inc.

Forwarding classes group traffic and assign the traffic to output queues. Each forwarding class is mapped to an output queue. Classification maps incoming traffic to forwarding classes based on the code point bits in the packet or frame header. Forwarding class to queue mapping defines the output queue used for the traffic classified into a forwarding class.

Except on NFX Series devices, a classifier must associate each packet with one of the following four (QFX10000 switches) or five (other switches) default forwarding classes or with a user-configured forwarding class to assign an output queue to the packet:

- fcoe—Guaranteed delivery for Fibre Channel over Ethernet (FCoE) traffic.
- no-loss—Guaranteed delivery for TCP lossless traffic.
- best-effort—Provides best-effort delivery without a service profile. Loss priority is typically not carried in a class-of-service (CoS) value.
- network-control—Supports protocol control and is typically high priority.
- mcast—(Except QFX10000) Delivery of multidestination (multicast, broadcast, and destination lookup fail) packets.

On NFX Series devices, a classifier must associate each packet with one of the following four default forwarding classes or with a user-configured forwarding class to assign an output queue to the packet:

- best-effort (be)—Provides no service profile. Loss priority is typically not carried in a CoS value.
- expedited-forwarding (ef)—Provides a low loss, low latency, low jitter, assured bandwidth, end-to-end service.
- assured-forwarding (af)—Provides a group of values you can define and includes four subclasses: AF1, AF2, AF3, and AF4, each with two drop probabilities: low and high.
- network-control (nc)—Supports protocol control and thus is typically high priority.

The switch supports up to eight (QFX10000 and NFX Series devices), 10 (QFX5200 switches), or 12 (other switches) forwarding classes, thus enabling flexible, differentiated, packet classification. For example, you can configure multiple classes of best-effort traffic such as **best-effort**, **best-effort1**, and **best-effort2**.

On QFX10000 and NFX Series devices, unicast and multidestination (multicast, broadcast, and destination lookup fail) traffic use the same forwarding classes and output queues.

Except on QFX10000 and NFX Series devices, a switch supports 8 queues for uniacast traffic (queues 0 through 7) and 2 (QFX5200 switches) or 4 (other switches) output queues for multidestination traffic (queues 8 through 11). Forwarding classes mapped to unicast queues are associated with unicast traffic, and forwarding classes mapped to multidestination queues are associated with multidestination traffic. You cannot map unicast and multidestination traffic to the same queue. You cannot map a strict-high priority queue to a multidestination forwarding class because queues 8 through 11 do not support strict-high priority configuration.

- Default Forwarding Classes on page 106

- Forwarding Class Configuration Rules on page 107
- Lossless Transport Support on page 109

Default Forwarding Classes

Table 43 on page 106 shows the four default forwarding classes that apply to all switches but not NFX Series devices. Except on QFX10000, these forwarding classes apply to unicast traffic. You can rename the forwarding classes. Assigning a new forwarding class name does not alter the default classification or scheduling applied to the queue that is mapped to that forwarding class. CoS configurations can be complex, so unless it is required by your scenario, we recommend that you use the default class names and queue number associations.

Table 43: Default Forwarding Classes

Forwarding Class Name	Default Queue Mapping	Comments
best-effort	0	The software does not apply any special CoS handling to best-effort traffic. This is a backward compatibility feature. Best-effort traffic is usually the first traffic to be dropped during periods of network congestion. By default, this is a lossy forwarding class with a packet drop attribute of **drop**.
fcoe	3	By default, the **fcoe** forwarding class is a lossless forwarding class designed to handle Fibre Channel over Ethernet (FCoE) traffic. The **no-loss** packet drop attribute is applied by default. NOTE: By convention, deployments with converged server access typically use IEEE 802.1p priority 3 (011) for FCoE traffic. The default mapping of the **fcoe** forwarding class is to queue 3. Apply priority-based flow control (PFC) to the entire FCoE data path to configure the end-to-end lossless behavior that FCoE requires. We recommend that you use priority 3 for FCoE traffic unless your network architecture requires that you use a different priority.
no-loss	4	By default, this is a lossless forwarding class with a packet drop attribute of **no-loss**.
network-control	7	The software delivers packets in this service class with a high priority. (These packets are not delay-sensitive.) Typically, these packets represent routing protocol hello or keepalive messages. Because loss of these packets jeopardizes proper network operation, packet delay is preferable to packet discard. By default, this is a lossy forwarding class with a packet drop attribute of **drop**.

Copyright © 2018, Juniper Networks, Inc.

NOTE: Table 44 on page 107 applies only to multidestination traffic except on QFX10000 switches and NFX Series devices.

Table 44: Default Forwarding Classes for Multidestination Packets

Forwarding Class Name	Default Queue Mapping	Comments
mcast	8	The software does not apply any special CoS handling to the multidestination packets. These packets are usually dropped under congested network conditions. By default, this is a lossy forwarding class with a packet drop attribute of **drop**.

NOTE: Mirrored traffic is always sent to the queue that corresponds to the multidestination forwarding class. The switched copy of the mirrored traffic is forwarded with the priority determined by the behavior aggregate classification process.

Forwarding Class Configuration Rules

Take the following rules into account when you configure forwarding classes:

- Queue Assignment Rules on page 107
- Scheduling Rules on page 108
- Rewrite Rules on page 108

Queue Assignment Rules

The following rules govern queue assignment:

- CoS configurations that specify more queues than the switch can support are not accepted. The commit operation fails with a detailed message that states the total number of queues available.
- All default CoS configurations are based on queue number. The name of the forwarding class that appears in the default configuration is the forwarding class currently mapped to that queue.
- (Except QFX10000 and NFX Series devices) Only unicast forwarding classes can be mapped to unicast queues (0 through 7), and only multidestination forwarding classes can be mapped to multidestination queues (8 through 11).
- (Except QFX10000 and NFX Series devices) Strict-high priority queues cannot be mapped to multidestination forwarding classes. (Strict-high priority traffic cannot be mapped to queues 8 through 11).
- If you map more than one forwarding class to a queue, all of the forwarding classes mapped to the same queue must have the same packet drop attribute: either all of the forwarding classes must be lossy or all of the forwarding classes must be lossless.

Copyright © 2018, Juniper Networks, Inc.

You can limit the amount of traffic that receives strict-high priority treatment on a strict-high priority queue by configuring a transmit rate. The transmit rate sets the amount of traffic on the queue that receives strict-high priority treatment. The switch treats traffic that exceeds the transmit rate as low priority traffic that receives the queue excess rate bandwidth. Limiting the amount of traffic that receives strict-high priority treatment prevents other queues from being starved while also ensuring that the amount of traffic specified in the transmit rate receives strict-high priority treatment.

NOTE: Except on QFX10000 and NFX Series devices, you can use the shaping-rate statement to throttle the rate of packet transmission by setting a maximum bandwidth. On QFX10000 and NFX Series devices, you can use the transmit rate to set a limit on the amount of bandwidth that receives strict-high priority treatment on a strict-high priority queue.

On QFX10000 and NFX Series devices, if you configure more than one strict-high priority queue on a port, you must configure a transmit rate on each of the strict-high priority queues. If you configure more than one strict-high priority queue on a port and you do not configure a transmit rate on the strict-high priority queues, the switch treats only the first queue you configure as a strict-high priority queue. The switch treats the other queues as low priority queues. If you configure a transmit rate on some strict-high priority queues but not on other strict-high priority queues on a port, the switch treats the queues that have a transmit rate as strict-high priority queues, and treats the queues that do not have a transmit rate as low priority queues.

Scheduling Rules

When you configure a forwarding class and map traffic to it (that is, you are not using a default classifier and forwarding class), you must also define a scheduling policy for the forwarding class.

Defining a scheduling policy means:

- Mapping a scheduler to the forwarding class in a scheduler map
- Including the forwarding class in a forwarding class set
- Associating the scheduler map with a traffic control profile
- Attaching the traffic control profile to a forwarding class set and applying the traffic control profile to an interface

On QFX10000 switches and NFX Series devices, you can define a scheduling policy using port scheduling as follows:

- Mapping a scheduler to the forwarding class in a scheduler map
- Applying the scheduler map to one or more interfaces

Rewrite Rules

On each physical interface, either all forwarding classes that are being used on the interface must have rewrite rules configured, or no forwarding classes that are being used

 Copyright © 2018, Juniper Networks, Inc.

on the interface can have rewrite rules configured. On any physical port, do not mix forwarding classes with rewrite rules and forwarding classes without rewrite rules.

Lossless Transport Support

The switch supports up to six lossless forwarding classes. For lossless transport, you must enable PFC on the IEEE 802.1p code point of lossless forwarding classes. The following limitations apply to support lossless transport:

- The external cable length from the switch or QFabric system Node device to other devices cannot exceed 300 meters.
- The internal cable length from the QFabric system Node device to the QFabric system Interconnect device cannot exceed 150 meters.
- For FCoE traffic, the interface maximum transmission unit (MTU) must be at least 2180 bytes to accommodate the packet payload, headers, and checks.
- Changing any portion of a PFC configuration on a port blocks the entire port until the change is completed. After a PFC change is completed, the port is unblocked and traffic resumes. Changing the PFC configuration means any change to a congestion notification profile that is configured on a port (enabling or disabling PFC on a code point, changing the MRU or cable-length value, or specifying an output flow control queue). Blocking the port stops ingress and egress traffic, and causes packet loss on all queues on the port until the port is unblocked.

Copyright © 2018, Juniper Networks, Inc.

NOTE: Junos OS Release 12.2 introduces changes to the way lossless forwarding classes (the **fcoe** and **no-loss** forwarding classes) are handled.

In Junos OS Release 12.1, both explicitly configuring the **fcoe** and **no-loss** forwarding classes, and using the default configuration for these forwarding classes, resulted in the same lossless behavior for traffic mapped to those forwarding classes.

However, in Junos OS Release 12.2, if you explicitly configure the **fcoe** or the **no-loss** forwarding class, that forwarding class is no longer treated as a lossless forwarding class. Traffic mapped to these forwarding classes is treated as lossy (**best-effort**) traffic. This is true even if the explicit configuration is exactly the same as the default configuration.

If your CoS configuration from Junos OS Release 12.1 or earlier includes the explicit configuration of the **fcoe** or the **no-loss** forwarding class, then when you upgrade to Junos OS Release 12.2, those forwarding classes are not lossless. To preserve the lossless treatment of these forwarding classes, delete the explicit **fcoe** and **no-loss** forwarding class configuration before you upgrade to Junos OS Release 12.2.

See "Overview of CoS Changes Introduced in Junos OS Release 12.2" on page 54 for detailed information about this change and how to delete an existing lossless configuration.

In Junos OS Release 12.3, the default behavior of the **fcoe** and **no-loss** forwarding classes is the same as in Junos OS Release 12.2. However, in Junos OS Release 12.3, you can configure up to six lossless forwarding classes. All explicitly configured lossless forwarding classes must include the new **no-loss** packet drop attribute or the forwarding class is lossy.

Related Documentation

- Overview of CoS Changes Introduced in Junos OS Release 12.2 on page 54
- Understanding Junos CoS Components on page 17
- Understanding CoS Packet Flow on page 25
- Understanding CoS Flow Control (Ethernet PAUSE and PFC) on page 414
- Example: Configuring Forwarding Classes on page 113
- Defining CoS Forwarding Classes on page 111

Copyright © 2018, Juniper Networks, Inc.

Defining CoS Forwarding Classes

Forwarding classes allow you to group packets for transmission. The switch supports a total of eight (QFX10000 and NFX Series devices), 10 (QFX5200 switches), or 12 (other switches) forwarding classes. To forward traffic, you map (assign) the forwarding classes to output queues.

The QFX10000 switches and NFX Series devices have eight output queues, queues 0 through 7. These queues support both unicast and multidestination traffic.

Except on QFX10000 and NFX Series devices, the switch has 10 output queues (QFX5200) or 12 output queues (other switches). Queues 0 through 7 are for unicast traffic and queues 8 through 11 are for multicast traffic. Forwarding classes mapped to unicast queues must carry unicast traffic, and forwarding classes mapped to multidestination queues must carry multidestination traffic. There are four default unicast forwarding classes and one default multidestination forwarding class.

The default forwarding classes, except on NFX Series devices, are:

NOTE: **Except on QFX10000, these are the default unicast forwarding classes.**

- **best-effort**—Best-effort traffic
- **fcoe**—Guaranteed delivery for Fibre Channel over Ethernet traffic (do not use on OCX Series switches)
- **no-loss**—Guaranteed delivery for TCP no-loss traffic (do not use on OCX Series switches)
- **network-control**—Network control traffic

The default multidestination forwarding class, except on QFX10000 switches and NFX Series devices, is:

- **mcast**—Multidestination traffic

The NFX Series devices have the following default forwarding classes:

- best-effort (be)—Provides no service profile. Loss priority is typically not carried in a CoS value.
- expedited-forwarding (ef)—Provides a low loss, low latency, low jitter, assured bandwidth, end-to-end service.
- assured-forwarding (af)—Provides a group of values you can define and includes four subclasses: AF1, AF2, AF3, and AF4, each with two drop probabilities: low and high.
- network-control (nc)—Supports protocol control and thus is typically high priority.

You can map forwarding classes to queues using the **class** statement. You can map more than one forwarding class to a single queue. Except on QFX10000 or NFX Series devices, all forwarding classes mapped to a particular queue must be of the same type, either

unicast or multicast. You cannot mix unicast and multicast forwarding classes on the same queue.

All of the forwarding classes mapped to the same queue must have the same packet drop attribute: either all of the forwarding classes must be lossy or all of the forwarding classes must be lossless. This is important because the default fcoe and no-loss forwarding classes have the **no-loss** drop attribute, which is not supported on OCX Series switches. On OCX Series switches, do not map traffic to the default fcoe and no-loss forwarding classes.

```
[edit class-of-service forwarding-classes]
user@switch# set class class-name queue-num queue-number <no-loss>
```

One example is to create a forwarding class named **be2** and map it to queue 1:

```
[edit class-of-service forwarding-classes]
user@switch# set class be2 queue-num 1
```

Another example is to create a lossless forwarding class named **fcoe2** and map it to queue 5:

```
[edit class-of-service forwarding-classes]
user@switch# set class fcoe2 queue-num 5 no-loss
```

NOTE: On switches that do not run ELS software, if you are using Junos OS Release 12.2 or later, use the default forwarding-class-to-queue mapping for the lossless **fcoe** and **no-loss** forwarding classes. If you explicitly configure the lossless forwarding classes, the traffic mapped to those forwarding classes is treated as lossy (**best-effort**) traffic and does *not* receive lossless treatment unless you include the optional **no-loss** packet drop attribute introduced in Junos OS Release 12.3 in the forwarding class configuration..

NOTE: On switches that do not run ELS software, Junos OS Release 11.3R1 and earlier supported an alternate method of mapping forwarding classes to queues that allowed you to map only one forwarding class to a queue using the statement:

```
[edit class-of-service forwarding-classes]
user@switch# set queue queue-number class-name
```

The **queue** statement has been deprecated and is no longer valid in Junos OS Release 11.3R2 and later. If you have a configuration that uses the **queue** statement to map forwarding classes to queues, edit the configuration to replace the **queue** statement with the **class** statement.

Related Documentation

- Example: Configuring CoS Hierarchical Port Scheduling (ETS) on page 198
- Example: Configuring Forwarding Classes on page 113

Copyright © 2018, Juniper Networks, Inc.

- Monitoring CoS Forwarding Classes on page 822
- Understanding CoS Forwarding Classes on page 104
- *Understanding CoS Port Schedulers on QFX Switches*

Example: Configuring Forwarding Classes

Forwarding classes group packets for transmission. Forwarding classes map to output queues, so the packets assigned to a forwarding class use the output queue mapped to that forwarding class. Except on QFX10000, unicast traffic and multidestination (multicast, broadcast, and destination lookup fail) traffic use separate forwarding classes and output queues.

- Requirements on page 113
- Overview on page 113
- Example 1: Configuring Forwarding Classes for Switches Except QFX10000 on page 116
- Example 2: Configuring Forwarding Classes for QFX10000 Switches on page 117

Requirements

This example uses the following hardware and software components for two configuration examples:

Configuring forwarding classes for switches except QFX10000

- One switch except QFX10000 (this example was tested on a Juniper Networks QFX3500 Switch)
- Junos OS Release 11.1 or later for the QFX Series or Junos OS Release 14.1X53-D20 or later for the OCX Series

Configuring forwarding classes for QFX10000 switches

- One QFX10000 switch
- Junos OS Release 15.1X53-D10 or later for the QFX Series

Overview

The QFX10000 switch supports eight forwarding classes. Other switches support up to 12 forwarding classes. To forward traffic, you must map (assign) the forwarding classes to output queues. On the QFX10000 switch, queues 0 through 7 are for both unicast and multidestination traffic. On other switches, queues 0 through 7 are for unicast traffic, and queues 8 through 9 (QFX5200 switch) or 8 through 11 (other switches) are for multidestination traffic. Except for OCX Series switches, switches support up to six lossless forwarding classes. (OCX Series switches do not support lossless Layer 2 transport.)

The switch provides four default forwarding classes, and except on QFX10000 switches, these four forwarding classes are unicast, plus one default multidestination forwarding

class. You can define the remaining forwarding classes and configure them as unicast or multidestination forwarding classes by mapping them to unicast or multidestination queues. The type of queue, unicast or multidestination, determines the type of forwarding class.

The four default forwarding classes (unicast except on QFX10000) are:

- **be**—Best-effort traffic
- **fcoe**—Guaranteed delivery for Fibre Channel over Ethernet traffic (do not use on OCX Series switches)
- **no-loss**—Guaranteed delivery for TCP no-loss traffic (do not use on OCX Series switches)
- **nc**—Network control traffic

Except on QFX10000 switches, the default multidestination forwarding class is:

- **mcast**—Multidestination traffic

Map forwarding classes to queues using the **class** statement. You can map more than one forwarding class to a single queue, but all forwarding classes mapped to a particular queue must be of the same type:

- Except on QFX10000 switches, all forwarding classes mapped to a particular queue must be either unicast or multicast. You cannot mix unicast and multicast forwarding classes on the same queue.
- On QFX10000 switches, all forwarding classes mapped to a particular queue must have the same packet drop attribute: all of the forwarding classes must be lossy, or all of the forwarding classes mapped to a queue must be lossless.

```
[edit class-of-service forwarding-classes]
user@switch# set class class-name queue-num queue-number ;
```

NOTE: On switches that do not run ELS software, if you are using Junos OS Release 12.2, use the default forwarding-class-to-queue mapping for the lossless fcoe and no-loss forwarding classes. If you explicitly configure the lossless forwarding classes, the traffic mapped to those forwarding classes is treated as lossy (best-effort) traffic and does *not* receive lossless treatment.

In Junos OS Release 12.3 and later, you can include the *no-loss* packet drop attribute in explicit forwarding class configurations to configure a lossless forwarding class.

Copyright © 2018, Juniper Networks, Inc.

NOTE: On switches that do not run ELS software, Junos OS Release 11.3R1 and earlier supported an alternate method of mapping forwarding classes to queues that allowed you to map only one forwarding class to a queue using the statement:

```
[edit class-of-service forwarding-classes]
user@switch# set queue queue-number class-name
```

The **queue** statement has been deprecated and is no longer valid in Junos OS Release 11.3R2 and later. If you have a configuration that uses the **queue** statement to map forwarding classes to queues, edit the configuration to replace the **queue** statement with the **class** statement.

NOTE: Hierarchical scheduling controls output queue forwarding. When you define a forwarding class and classify traffic into it, you must also define a scheduling policy for the forwarding class. Defining a scheduling policy means:

- Mapping a scheduler to the forwarding class in a scheduler map
- Including the forwarding class in a forwarding class set
- Associating the scheduler map with a traffic control profile
- Attaching the traffic control profile to a forwarding class set and applying the traffic control profile to an interface

On QFX10000 switches, you can define a scheduling policy using port scheduling:

- Mapping a scheduler to the forwarding class in a scheduler map.
- Applying the scheduler map to one or more interfaces.

Example 1: Configuring Forwarding Classes for Switches Except QFX10000

Configuration

Step-by-Step Procedure

Table 45 on page 116 shows the configuration forwarding-class-to-queue mapping for this example:

Table 45: Forwarding-Class-to-Queue Example Configuration Except on QFX10000

Forwarding Class	Queue
best-effort	0
nc	7
mcast	8

To configure CoS forwarding classes for switches except QFX10000:

1. Map the **best-effort** forwarding class to queue **0**:

```
[edit class-of-service forwarding-classes]
user@switch# set class best-effort queue-num 0
```

2. Map the **nc** forwarding class to queue **7**:

```
[edit class-of-service forwarding-classes]
user@switch# set class nc queue-num 7
```

3. Map the **mcast-be** forwarding class to queue **8**:

```
[edit class-of-service forwarding-classes]
user@switch# set class mcast-be queue-num 8
```

Verification

Verifying the Forwarding-Class-to-Queue Mapping

Purpose

Verify the forwarding-class-to-queue mapping. (The system shows only the explicitly configured forwarding classes; it does not show default forwarding classes such as **fcoe** and **no-loss**.)

Action

Verify the results of the forwarding class configuration using the operational mode command **show configuration class-of-service forwarding-classes**:

```
user@switch> show configuration class-of-service forwarding-classes
```


Copyright © 2018, Juniper Networks, Inc.

```
class best-effort queue-num 0;
class network-control queue-num 7;
class mcast queue-num 8;
```

Example 2: Configuring Forwarding Classes for QFX10000 Switches

Configuration

Step-by-Step Procedure

Table 46 on page 117 shows the configuration forwarding-class-to-queue mapping for this example:

Table 46: Forwarding-Class-to-Queue Example Configuration on QFX10000

Forwarding Class	Queue
best-effort	0
be1	1
nc	7

To configure CoS forwarding classes for QFX10000 switches:

1. Map the **best-effort** forwarding class to queue **0**:

   ```
   [edit class-of-service forwarding-classes]
   user@switch# set class best-effort queue-num 0
   ```

2. Map the **be1** forwarding class to queue **1**:

   ```
   [edit class-of-service forwarding-classes]
   user@switch# set class be1 queue-num 1
   ```

3. Map the **nc** forwarding class to queue **7**:

   ```
   [edit class-of-service forwarding-classes]
   user@switch# set class nc queue-num 7
   ```

Verification

Verifying the Forwarding-Class-to-Queue Mapping

Purpose

Verify the forwarding-class-to-queue mapping. (The system shows only the explicitly configured forwarding classes; it does not show default forwarding classes such as **fcoe** and **no-loss**.)

Action Verify the results of the forwarding class configuration using the operational mode command **show configuration class-of-service forwarding-classes**:

```
user@switch> show configuration class-of-service forwarding-classes
class best-effort queue-num 0;
class be1 queue-num 1;
class network-control queue-num 7;
```

Related Documentation

- Example: Configuring CoS Hierarchical Port Scheduling (ETS) on page 198
- Defining CoS Forwarding Classes on page 111
- Monitoring CoS Forwarding Classes on page 822
- Overview of CoS Changes Introduced in Junos OS Release 11.3 on page 46
- Overview of CoS Changes Introduced in Junos OS Release 12.2 on page 54
- Understanding CoS Forwarding Classes on page 104
- *Understanding CoS Forwarding Classes*

Understanding CoS Forwarding Class Sets (Priority Groups)

A forwarding class set is the Junos OS configuration construct that equates to a priority group in enhanced transmission selection (ETS, described in IEEE 802.1Qaz). The switch implements ETS using a two-tier hierarchical scheduler.

A priority group is a group of forwarding classes. Each forwarding class is mapped to an output queue and an IEEE 802.1p priority (code points). Classifying traffic into a forwarding class based on its code points, and mapping the forwarding class to a queue, defines the traffic assigned to that queue. The forwarding classes that belong to a priority group share the port bandwidth allocated to that priority group. The traffic mapped to forwarding classes in one priority group usually shares similar traffic-handling requirements.

You can configure up to three unicast forwarding class sets and one multicast forwarding class set. Only unicast forwarding classes can belong to unicast forwarding class sets. Only multicast forwarding classes can belong to the multicast forwarding class set.

If you configure a strict-high priority forwarding class (you can configure only one strict-high priority forwarding class), you must observe the following rules when configuring forwarding class sets:

- You must create a separate forwarding class set for the strict-high priority forwarding class.
- Only one forwarding class set can contain the strict-high priority forwarding class.
- A strict-high priority forwarding class cannot belong to the same forwarding class set as forwarding classes that are not strict-high priority.

 Copyright © 2018, Juniper Networks, Inc.

- A strict-high priority forwarding class cannot belong to a multidestination forwarding class set.
- You cannot configure a guaranteed minimum bandwidth (guaranteed rate) for a forwarding class set that includes a strict-high priority forwarding class. (You also cannot configure a guaranteed minimum bandwidth for a strict-high forwarding class.)
- We recommend that you always apply a shaping rate to a strict-high priority forwarding class to prevent it from starving the queues mapped to other forwarding classes. If you do not apply a shaping rate to limit the amount of bandwidth a strict-high priority forwarding class can use, then the strict-high priority forwarding class can use all of the available port bandwidth and starve other forwarding classes on the port.

You must use hierarchical scheduling if you explicitly configure CoS. The two-tier hierarchical scheduler defines bandwidth resources for the forwarding class set (priority group), and then allocates those resources among the forwarding classes (priorities) that belong to the forwarding class set.

If you do not explicitly configure forwarding class sets, the system automatically creates a default forwarding class set that contains all of the forwarding classes on the switch. The system assigns 100 percent of the port output bandwidth to the default forwarding class set. Ingress traffic is classified based on the default classifier settings. The forwarding classes in the default forwarding class set receive bandwidth based on the default scheduler settings. Forwarding classes that are not part of the default scheduler receive no bandwidth. The default priority group is transparent. It does not appear in the configuration and is used for Data Center Bridging Capability Exchange Protocol (DCBX) advertisement (except on OCX Series switches, which do not support DCBX).

When you explicitly configure forwarding class sets and apply them to interfaces, on those interfaces, forwarding classes that you do not map to a forwarding class set receive no guaranteed bandwidth. Forwarding classes that belong to the default forwarding class set might receive bandwidth if the other forwarding class sets are not using all of the port bandwidth. However, the amount of bandwidth received by forwarding classes that are not members of a forwarding class set is not guaranteed. In this case, the bandwidth a forwarding class receives if it is not a member of a forwarding class set depends on whether unused port bandwidth is available and therefore is not deterministic.

To guarantee bandwidth for forwarding classes in a predictable manner, be sure to map all forwarding classes that you expect to carry traffic on an interface to a forwarding class set, and apply the forwarding class set to the interface.

Related Documentation

- Understanding CoS Hierarchical Port Scheduling (ETS) on page 192
- Example: Configuring CoS Hierarchical Port Scheduling (ETS) on page 198
- Example: Configuring Forwarding Class Sets on page 120
- Defining CoS Forwarding Class Sets on page 120

Defining CoS Forwarding Class Sets

A forwarding class set is a priority group for enhanced transmission selection (ETS) traffic control. Each forwarding class set consists of one or more forwarding classes. Classifiers map traffic into forwarding classes based on code points (priority), and forwarding classes are mapped to output queues.

You can configure up to three unicast forwarding class sets and one multicast forwarding class set.

To configure a forwarding class set using the CLI:

1. Assign one or more forwarding classes to the forwarding class set:

```
[edit class-of-service]
user@switch# set forwarding-class-sets forwarding-class-set-name class
forwarding-class-name
```

2. Map the forwarding class set to an interface:

```
[edit class-of-service]
user@switch# set interfaces interface-name forwarding-class-set forwarding-class-set-name
```

Related Documentation

- Example: Configuring CoS Hierarchical Port Scheduling (ETS) on page 198
- Example: Configuring Forwarding Class Sets on page 120
- Defining CoS Queue Schedulers on page 166
- Defining CoS Traffic Control Profiles (Priority Group Scheduling) on page 187
- Understanding CoS Forwarding Class Sets (Priority Groups) on page 118

Example: Configuring Forwarding Class Sets

A forwarding class set (fc-set) is a priority group for enhanced transmission selection (ETS) traffic control. Each fc-set consists of one or more forwarding classes (priorities). Classifiers map traffic to forwarding classes based on code points, and forwarding classes are mapped to output queues.

ETS enables you to configure link resources (bandwidth and bandwidth sharing characteristics) for an fc-set, and then allocate the fc-set's resources among the forwarding classes that belong to the fc-set. This is called two-tier, or hierarchical, scheduling. Traffic control profiles control the scheduling for the fc-set (priority group), and schedulers control the scheduling for individual forwarding classes (priorities).

- Requirements on page 121
- Overview on page 121

 Copyright © 2018, Juniper Networks, Inc.

- Configuring Forwarding Class Sets on page 122
- Verification on page 123

Requirements

This example uses the following hardware and software components:

- One switch (this example was tested on a Juniper Networks QFX3500 Switch)
- Junos OS Release 11.1 or later for the QFX Series or Junos OS Release 14.1X53-D20 or later for the OCX Series.

Overview

You can configure up to three unicast fc-sets and one multicast fc-set. A common way to configure unicast priority groups is to configure separate fc-sets for local area network (LAN) traffic, storage area network (SAN) traffic, and high-performance computing (HPC) traffic, and then assign the appropriate forwarding classes to each fc-set.

NOTE: **If you configure a strict-high priority forwarding class, you must create an fc-set that is dedicated only to strict-high priority traffic. You can only configure one strict-high priority forwarding class, and only one fc-set can contain a strict-high priority queue. Queues that are not strict-high priority cannot belong to the same fc-set as a strict-high priority queue. The multidestination fc-set cannot contain a strict-high priority queue.**

To apply ETS, you use a traffic control profile to map one or more fc-sets to a physical egress port. You can map up to three unicast forwarding class sets and one multidestination forwarding class set to each port. When you map an fc-set to a port, the port uses hierarchical scheduling to allocate port resources to the priority group (fc-set) and to allocate the priority group resources to the queues (forwarding classes) that belong to the priority group.

This example describes how to:

- Configure three fc-sets called **lan-pg**, **san-pg**, and **hpc-pg**.
- Assign forwarding classes to each of the fc-sets.
- Apply the fc-sets and their output traffic control profiles to an egress interface.

This example does not describe how to configure the forwarding classes assigned to the fc-sets or how to configure traffic control profiles (scheduling). "Example: Configuring CoS Hierarchical Port Scheduling (ETS)" on page 198 provides a complete example of how to configure ETS, including forwarding class and scheduling configuration. Table 47 on page 122 shows the configuration components for this example:

Table 47: Components of the Forwarding Class Sets Configuration Example

Component	Settings
Hardware	QFX3500 switch
LAN traffic priority group	Forwarding class set: **lan-pg** Forwarding classes: **best-effort-1**, **best-effort-2**
SAN traffic priority group	Forwarding class set: **san-pg** Forwarding classes: **fcoe**, **fcoe-2** NOTE: OCX Series switches do not support FCoE traffic or lossless Layer 2 transport. If you were configuring this example on an OCX Series switch, you could omit this priority group, or rename it and map different forwarding classes to it.
HPC traffic priority group	Forwarding class set: **hpc-pg** Forwarding classes: **nc**, **high-perf**
Egress interface	**xe-0/0/7**

Configuring Forwarding Class Sets

1. Define the **lan-pg** priority group (fc-set) and assign to it the forwarding classes **best-effort-1** and **best-effort-2**:

```
[edit class-of-service]
user@switch# set forwarding-class-sets lan-pg class best-effort-1
user@switch# set forwarding-class-sets lan-pg class best-effort-2
```

2. Define the **san-pg** priority group and assign to it the forwarding classes **fcoe** and **fcoe-2**:

```
[edit class-of-service]
user@switch# set forwarding-class-sets san-pg class fcoe
user@switch# set forwarding-class-sets san-pg class fcoe-2
```

3. Define the **hpc-pg** priority group and assign to it the forwarding classes **nc** and **high-perf**:

```
[edit class-of-service]
user@switch# set forwarding-class-sets hpc-pg class nc
user@switch# set forwarding-class-sets hpc-pg class high-perf
```

4. Map the three forwarding class sets to an interface (the output traffic control profiles associated with the forwarding class sets determine the class of service scheduling for the priority groups):

```
[edit class-of-service]
user@switch# set interfaces xe-0/0/7 forwarding-class-set lan-pg
output-traffic-control-profile lan-tcp
user@switch# set interfaces xe-0/0/7 forwarding-class-set san-pg
output-traffic-control-profile san-tcp
```


Copyright © 2018, Juniper Networks, Inc.

```
user@switch# set interfaces xe-0/0/7 forwarding-class-set hpc-pg
output-traffic-control-profile hpc-tcp
```

Verification

To verify the priority group configuration, perform these tasks:

- Verifying Forwarding Class Set Membership on page 123
- Verifying the Egress Interface Configuration on page 123

Verifying Forwarding Class Set Membership

Purpose Verify that you configured the **lan-pg**, **san-pg**, and **hpc-pg** priority groups with the correct forwarding classes.

Action List the forwarding class set member configuration using the operational mode command **show configuration class-of-service forwarding-class-sets**:

```
user@switch> show configuration class-of-service forwarding-class-sets
```

```
lan-pg {
    class best-effort-1;
    class best-effort-2;
}
san-pg {
    class fcoe;
    class fcoe-2;
}
hpc-pg {
    class high-perf;
    class nc;
}
```

Verifying the Egress Interface Configuration

Purpose Verify that egress interface **xe-0/0/7** is associated with the **lan-pg**, **san-pg**, and **hpc-pg** priority groups and with the correct output traffic control profiles.

Action Display the egress interface using the operational mode command **show configuration class-of-service interfaces xe-0/0/7**:

```
user@switch> show configuration class-of-service interfaces xe-0/0/7
```

```
forwarding-class-set {
    lan-pg {
        output-traffic-control-profile lan-tcp;
    }
    san-pg {
        output-traffic-control-profile san-tcp;
    }
    hpc-pg {
        output-traffic-control-profile hpc-tcp;
```

```
    }
}
```

Related Documentation

- Example: Configuring CoS Hierarchical Port Scheduling (ETS) on page 198
- Example: Configuring Queue Schedulers on page 169
- Example: Configuring Traffic Control Profiles (Priority Group Scheduling) on page 188
- Defining CoS Forwarding Class Sets on page 120
- Understanding CoS Forwarding Class Sets (Priority Groups) on page 118

Understanding Host Routing Engine Outbound Traffic Queues and Defaults

The host Routing Engine and CPU generate outbound traffic that is transmitted using different protocols. You cannot configure a classifier to map different types of outbound traffic that the host generates to forwarding classes (queues). The traffic that the host generates is assigned to forwarding classes by default as shown in Table 48 on page 125.

If you want to separate host outbound traffic from other traffic or if you want to assign that traffic to a particular queue, you can configure a single forwarding class for all traffic that the host generates. If you configure a forwarding class for outbound host traffic, that forwarding class is used globally for all traffic generated by the host. (That is, the host outbound traffic is mapped to the selected queue on all egress interfaces.) Configuring a forwarding class for host outbound traffic does not affect transit or incoming traffic.

Whether you use the default host outbound traffic forwarding class configuration or configure a forwarding class for all host outbound traffic, the configuration applies to all Layer 2 and Layer 3 protocols and to all application-level traffic such as FTP and ping operations.

If you configure a queue for host outbound traffic, the queue must be properly configured on all interfaces.

NOTE: Fibre Channel over Ethernet (FCoE) Initialization Protocol (FIP) packets generated by the CPU are always transmitted on the fcoe queue (queue 3), even if you configure a queue for host outbound traffic. This helps to ensure lossless behavior for FCoE traffic. QFabric systems classify FIP control packets into the same traffic class (fcoe) across the Interconnect device (fabric) and the egress Node device.

This does not apply to OCX Series switches, which do not support FCoE.

By default, traffic generated by the host is sent to the best effort queue (queue 0) or to the network control queue (queue 7). Table 48 on page 125 lists the default host traffic to output queue mapping.

Copyright © 2018, Juniper Networks, Inc.

Table 48: Routing Engine Protocol Default Queue Mapping

Routing Engine Protocol	Default Queue Mapping
Address Resolution Protocol (ARP) reply	Queue 0
ARP request	Queue 0
Border Gateway Protocol (BGP)	Queue 0
BGP TCP Retransmission	Queue 7
Fibre Channel over Ethernet (FCoE) Initialization Protocol (FIP)	Queue 3
File Transfer Protocol (FTP)	Queue 0
Internet Control Message Protocol (ICMP) reply	Queue 0
ICMP request	Queue 0
Internet Group Management Protocol (IGMP) query	Queue 7
IGMP report	Queue 0
Link Aggregation Control Protocol (LACP)	Queue 7
Open Shortest Path First (OSPF) hello	Queue 7
OSPF protocol data unit (PDU)	Queue 7
OSPF link state advertisements (LSAs)	Queue 7
Protocol Independent Multicast (PIM)	Queue 7
PIM hello	Queue 7
Simple Network Management Protocol (SNMP)	Queue 0
Secure Shell (SSH)	Queue 0
Telnet	Queue 0
Virtual Router Redundancy Protocol (VRRP)	Queue 7
VLAN Spanning Tree Protocol (VSTP)	Queue 7
xnm-clear-text	Queue 0
xnm-ssl	Queue 0

Copyright © 2018, Juniper Networks, Inc.

Related Documentation

- Understanding CoS Forwarding Classes on page 104
- *Understanding CoS Forwarding Classes*
- Changing the Host Outbound Traffic Default Queue Mapping on page 126
- Example: Configuring Forwarding Classes on page 113

Changing the Host Outbound Traffic Default Queue Mapping

If you do not want to use the default mapping of host Routing Engine and CPU outbound traffic to queues, you can change the default output queue. You can also change the default DSCP bits used in the type of service (ToS) field of packets generated by the Routing Engine.

Configuring a queue for host outbound traffic maps all traffic that the host generates to one forwarding class (queue). The configuration is global and applies to all host-generated traffic on the switch. Configuring a forwarding class for host outbound traffic does not affect transit or incoming traffic.

NOTE: Fibre Channel over Ethernet (FCoE) Initialization Protocol (FIP) packets generated by the CPU are always transmitted on the fcoe queue (queue 3), even if you configure a queue for host outbound traffic. This helps to ensure lossless behavior for FCoE traffic. QFabric systems classify FIP control packets into the same traffic class (fcoe) across the Interconnect device (fabric) and the egress Node device.

This does not apply to OCX Series switches, which do not support FCoE.

To change the host outbound traffic egress queue by including the **host-outbound-traffic** statement at the **[edit class-of-service]** hierarchy level:

```
[edit class-of-service]
host-outbound-traffic {
   forwarding-class class-name;
   dscp-code-point code-point;
}
```

For example, to map host outbound traffic to queue 7 (the network control forwarding class) and set the DSCP code point value to 101010:

```
[edit class-of-service]
host-outbound-traffic {
   forwarding-class network-control;
   dscp-code-point 101010
}
```

Related Documentation

- Understanding Host Routing Engine Outbound Traffic Queues and Defaults on page 124

Copyright © 2018, Juniper Networks, Inc.

Understanding CoS Rewrite Rules

As packets enter or exit a network, edge switches might be required to alter the class-of-service (CoS) settings of the packets. Rewrite rules set the value of the code point bits (Layer 3 DSCP bits, Layer 2 CoS bits, or MPLS EXP bits) within the header of the outgoing packet. Each rewrite rule:

1. Reads the current forwarding class and loss priority associated with the packet.
2. Locates the new (rewrite) code point value from a table.
3. Writes that code point value into the packet header, replacing the old code point value.

Rewrite rules must be assigned to an interface for rewrites to take effect.

You can apply (bind) one DSCP or DSCP IPv6 rewrite rule and one IEEE 802.1p rewrite rule to each interface. You can also bind EXP rewrite rules to **family mpls** logical interfaces to rewrite the CoS bits of MPLS traffic.

NOTE: **OCX Series switches do not support MPLS and do not support EXP rewrite rules.**

You cannot apply both a DSCP and a DSCP IPv6 rewrite rule to the same physical interface. Each physical interface supports only one DSCP rewrite rule. Both IP and IPv6 packets use the same DSCP rewrite rule, regardless if the configured rewrite rule is DSCP or DSCP IPv6. You can apply an EXP rewrite rule on an interface that has DSCP or IEEE rewrite rules. Only MPLS traffic on **family mpls** interfaces uses the EXP rewrite rule.

You *can* apply both a DSCP rewrite rule and a DSCP IPv6 rewrite rule to a logical interface. IPv6 packets are rewritten with DSCP-IPv6 rewrite-rules and IPv4 packets are remarked with DSCP rewrite-rules.

NOTE: **There are no default rewrite rules. If you want to apply a rewrite rule to outgoing packets, you must explicitly configure the rewrite rule.**

You can look at behavior aggregate (BA) classifiers and rewrite rules as two sides of the same coin. A BA classifier reads the code point bits of incoming packets and classifies the packets into forwarding classes, then the system applies the CoS configured for the forwarding class to those packets. Rewrite rules change (rewrite) the code point bits just before the packets leave the system so that the next switch or router can apply the appropriate level of CoS to the packets. When you apply a rewrite rule to an interface, the rewrite rule is the last CoS action performed on the packet before it is forwarded.

Rewrite rules alter CoS values in outgoing packets on the outbound interfaces of an edge switch to accommodate the policies of a targeted peer. This allows the downstream switch in a neighboring network to classify each packet into the appropriate service group.

Copyright © 2018, Juniper Networks, Inc.

NOTE: On each physical interface, either all forwarding classes that are being used on the interface must have rewrite rules configured or no forwarding classes that are being used on the interface can have rewrite rules configured. On any physical port, do not mix forwarding classes with rewrite rules and forwarding classes without rewrite rules.

NOTE: Rewrite rules are applied *before* the egress filter is matched to traffic. Because the code point rewrite occurs before the egress filter is matched to traffic, the egress filter match is based on the rewrite value, not on the original code point value in the packet.

For packets that carry both an inner VLAN tag and an outer VLAN tag, the rewrite rule rewrites only the outer VLAN tag.

MPLS EXP rewrite rules apply only to **family mpls** logical interfaces. You cannot apply to an EXP rewrite rule to a physical interface. You can configure up to 64 EXP rewrite rules, but you can only use 16 EXP rewrite rules at any time on the switch. On a given logical interface, all pushed MPLS labels have the same EXP rewrite rule applied to them. You can apply different EXP rewrite rules to different logical interfaces on the same physical interface.

NOTE: If the switch is performing penultimate hop popping (PHP), EXP rewrite rules do not take effect. If both an EXP classifier and an EXP rewrite rule are configured on the switch, then the EXP value from the last popped label is copied into the inner label. If either an EXP classifier or an EXP rewrite rule (but not both) is configured on the switch, then the inner label EXP value is sent unchanged.

You can configure enough rewrite rules to handle most, if not all, network scenarios. Table 49 on page 128 shows how many of each type of rewrite rules you can configure, and how many entries you can configure per rewrite rule.

Table 49: Configuring Rewrite Rules

Rewrite Rule Type	Maximum Number of Rewrite Rules	Maximum Number of Entries per Rewrite Rule
IEEE 802.1p	64	128
DSCP	32	128
DSCP IPv6	32	128
MPLS EXP	64	128

Copyright © 2018, Juniper Networks, Inc.

You cannot apply rewrite rules directly to integrated routing and bridging (IRB), also known as routed VLAN interfaces (RVIs), because the members of IRBs/RVIs are VLANs, not ports. However, you can apply rewrite rules to the VLAN port members of an IRB/RVI.

NOTE: OCX Series witches do not support IRBs/RVIs.

Related Documentation

- Understanding Junos CoS Components on page 17
- Defining CoS Rewrite Rules on page 130
- *Configuring Rewrite Rules for MPLS EXP Classifiers*

Defining CoS Rewrite Rules

Edge switches might need to change the class-of-service (CoS) settings of the packets. You can configure rewrite rules to alter code point bit values in outgoing packets on the outbound interfaces of a switch so that the CoS treatment matches the policies of a targeted peer. Policy matching allows the downstream routing platform or switch in a neighboring network to classify each packet into the appropriate service group.

To configure a CoS rewrite rule, create the rule by giving it a name and associating it with a forwarding class, loss priority, and code point. This creates a rewrite table. After the rewrite rule is created, enable it on an interface (EXP rewrite rules can only be enabled on **family mpls** logical interfaces, not on physical interfaces). You can also apply an existing rewrite rule on an interface.

NOTE: OCX Series switches do not support MPLS, so they do not support EXP rewrite rules.

NOTE: On each physical interface, either all forwarding classes that are being used on the interface must have rewrite rules configured, or no forwarding classes that are being used on the interface can have rewrite rules configured. On any physical port, do not mix forwarding classes with rewrite rules and forwarding classes without rewrite rules.

NOTE: To replace an existing rewrite rule on the interface with a new rewrite rule of the same type, first explicitly remove the existing rewrite rule and then apply the new rule.

NOTE: For packets that carry both an inner VLAN tag and an outer VLAN tag, the rewrite rule rewrites only the outer VLAN tag.

To create rewrite rules and enable them on interfaces:

- To create an 802.1p rewrite rule named **customup-rw** in the rewrite table for all Layer 2 interfaces:

```
[edit class-of-service rewrite-rules]
user@switch# set ieee-802.1 customup-rw forwarding-class be loss-priority low code-point
000
user@switch# set ieee-802.1 customup-rw forwarding-class be loss-priority high code-point
001
user@switch# set ieee-802.1 customup-rw forwarding-class be loss-priority low code-point
010
user@switch# set ieee-802.1 customup-rw forwarding-class fcoe loss-priority low code-point
011
```


Copyright © 2018, Juniper Networks, Inc.

```
user@switch# set ieee-802.1 customup-rw forwarding-class ef-no-loss loss-priority low
code-point 100
user@switch# set ieee-802.1 customup-rw forwarding-class ef-no-loss loss-priority high
code-point 101
user@switch# set ieee-802.1 customup-rw forwarding-class nc loss-priority low code-point
110
user@switch# set ieee-802.1 customup-rw forwarding-class nc loss-priority high code-point
111
```

- To enable an 802.1p rewrite rule named **customup-rw** on a Layer 2 interface:

```
[edit]
user@switch# set class-of-service interfaces xe-0/0/7 unit 0 rewrite-rules ieee-802.1
customup-rw
```

NOTE: All forwarding classes assigned to port xe-0/0/7 must have rewrite rules. Do not mix forwarding classes that have rewrite rules with forwarding classes that do not have rewrite rules on the same physical interface.

- To enable an 802.1p rewrite rule named **customup-rw** on all 10-Gigabit Ethernet interfaces on the switch, use wildcards for the interface name and logical interface (unit) number:

```
[edit]
user@switch# set class-of-service interfaces xe-* unit * rewrite-rules customup-rw
```

NOTE: In this case, *all* forwarding classes assigned to *all* 10-Gigabit Ethernet ports must have rewrite rules. Do not mix forwarding classes that have rewrite rules with forwarding classes that do not have rewrite rules on the same physical interface.

Related Documentation

- Monitoring CoS Rewrite Rules on page 825
- *Configuring Rewrite Rules for MPLS EXP Classifiers*
- Understanding CoS Rewrite Rules on page 127
- *Understanding CoS MPLS EXP Classifiers and Rewrite Rules*

Configuring CoS Fixed Classifier Rewrite Values for Native FC Interfaces (NP_Ports)

Fibre Channel over Ethernet (FCoE) traffic typically uses IEEE 802.1p priority 3 (code point 011). When Fibre Channel (FC) traffic arrives on a native FC interface (NP_Port) on an FCoE-FC gateway, the interface encapsulates the FC traffic in Ethernet to create FCoE frames. By default, the native FC interface assigns priority 3 to the FCoE traffic. The traffic is then forwarded internally to the gateway Ethernet interfaces, and then forwarded to the FCoE network.

If your FCoE network uses priority 3 for FCoE traffic, you do not need to use a rewrite value to remap the FCoE priority on native FC interfaces, because the default configuration maps priority 3 to the FCoE forwarding class.

However, if the FCoE network uses a different priority than priority 3 for FCoE traffic, then you can configure a rewrite value to remap incoming traffic from the FC SAN to that priority after the interface encapsulates the FC packets in Ethernet. Setting a rewrite value for the IEEE 802.1p code point (priority) configures the gateway native FC interface to assign the rewrite value to the encapsulated FCoE frames before forwarding the FCoE frames to the gateway Ethernet interface. Instead of a priority of 3, the FCoE frames use the priority specified in the rewrite value.

Traffic coming from the FC SAN is classified into a lossless forwarding class, and that lossless forwarding class is mapped to the rewrite value (the priority used for FCoE traffic on the converged Ethernet network). You specify the lossless forwarding class used for FCoE traffic on a native FC interface by configuring a fixed classifier and applying it to the native FC interface. (The same forwarding class must also be mapped to the rewrite value priority in the ingress classifier applied to the FCoE Ethernet interfaces.) All traffic received from the FC SAN on that FC interface is encapsulated in Ethernet, classified into the forwarding class specified in the fixed classifier, and assigned the rewrite value priority.

Configuring a rewrite value consists of:

- Configuring a fixed classifier on the native FC interface. The fixed classifier assigns all the traffic that arrives at the interface from the connected peer in the FC SAN to one fixed forwarding class. The forwarding class must be a lossless forwarding class and must be classified to the rewrite value priority in the ingress classifier configuration on the FCoE Ethernet interfaces.
- Specifying an IEEE 802.1p rewrite value for the native FC interface. The traffic mapped to the forwarding class in the fixed classifier is marked with the priority you specify in the rewrite value when the traffic is encapsulated in Ethernet. The rewrite value must be the IEEE 802.1p priority used for FCoE traffic in your converged Ethernet network.

You can configure one rewrite value for each local FCoE-FC gateway fabric. All of the native FC interfaces in a particular fabric must use the same rewrite value. Native FC interfaces that belong to different FCoE-FC gateway fabrics can use different rewrite values.

1. Configure a fixed classifier on the native FC interface:

   [edit class-of-service]

 Copyright © 2018, Juniper Networks, Inc.

```
user@switch# set interfaces fc-interface-name forwarding-class
lossless-forwarding-class-name
```

For example, to configure a fixed classifier on native FC interface **fc-0/0/2** that specifies the lossless forwarding class **fcoe1**:

```
[edit class-of-service]
user@switch# set interfaces fc-0/0/2 forwarding-class fcoe1
```

2. Configure a rewrite value for the traffic classified into the fixed classifier (this must be the IEEE 802.1p priority used for the traffic on your converged Ethernet network):

```
[edit class-of-service]
user@switch# set interfaces fc-interface-name rewrite-value input ieee-802.1 code-point
code-point-bits
```

For example, to configure a rewrite value on native FC interface **fc-0/0/2** that specifies an IEEE 802.1p priority of **101** (the lossless forwarding class specified in the fixed classifier must be classified to this priority in the ingress classifier configuration on the FCoE Ethernet interfaces):

```
[edit class-of-service]
user@switch# set interfaces fc-0/0/2 rewrite-value input ieee-802.1 code-point 101
```

In the example, all traffic from the FC SAN that arrives at FCoE-FC gateway interface fc-0/0/2 is encapsulated in Ethernet, classified into the lossless fcoe1 forwarding class, and tagged with the IEEE 802.1p priority 5 (code point 101). In this example, we assume that the converged Ethernet network uses priority 5 for FCoE traffic, and that the fcoe1 forwarding class is mapped to priority 5 in the ingress classifier configuration on the Ethernet interfaces. To achieve lossless transport, you must also enable PFC on priority 5 on the Ethernet interfaces that connect the FCoE traffic to the Ethernet network.

Related Documentation

- Example: Configuring IEEE 802.1p Priority Remapping on an FCoE-FC Gateway on page 522
- Understanding CoS IEEE 802.1p Priority Remapping on an FCoE-FC Gateway on page 519

Troubleshooting an Unexpected Rewrite Value

Problem

Description: Traffic from one or more forwarding classes on an egress port is assigned an unexpected rewrite value.

NOTE: For packets that carry both an inner VLAN tag and an outer VLAN tag, the rewrite rules rewrite only the outer VLAN tag.

Cause If you configure a rewrite rule for a forwarding class on an egress port, but you do not configure a rewrite rule for every forwarding class on that egress port, then the forwarding classes that do not have a configured rewrite rule are assigned random rewrite values.

For example:

1. Configure forwarding classes **fc1**, **fc2**, and **fc3**.
2. Configure rewrite rules for forwarding classes **fc1** and **fc2**, but not for forwarding class **fc3**.
3. Assign forwarding classes **fc1**, **fc2**, and **fc3** to a port.

When traffic for these forwarding classes flows through the port, traffic for forwarding classes **fc1** and **fc2** is rewritten correctly. However, traffic for forwarding class **fc3** is assigned a random rewrite value.

Solution If any forwarding class on an egress port has a configured rewrite rule, then all forwarding classes on that egress port must have a configured rewrite rule. Configuring a rewrite rule for any forwarding class that is assigned a random rewrite value solves the problem.

TIP: If you want the forwarding class to use the same code point value assigned to it by the ingress classifier, specify that value as the rewrite rule value. For example, if a forwarding class has the IEEE 802.1 ingress classifier code point value 011, configure a rewrite rule for that forwarding class that uses the IEEE 802.1p code point value 011.

NOTE: There are no default rewrite rules. You can bind one rewrite rule for DSCP traffic and one rewrite rule for IEEE 802.1p traffic to an interface. A rewrite rule can contain multiple forwarding-class-to-rewrite-value mappings.

1. To assign a rewrite value to a forwarding class, add the new rewrite value to the same rewrite rule as the other forwarding classes on the port:

   ```
   [edit class-of-service rewrite-rules]
   user@switch# set (dscp | ieee-802.1) rewrite-name forwarding-class class-name loss-priority
   priority code-point (alias | bits)
   ```

   For example, if the other forwarding classes on the port use rewrite values defined in the rewrite rule **custom-rw**, the forwarding class **be2** is being randomly rewritten, and you want to use IEEE 802.1 code point **002** for the **be2** forwarding class:

   ```
   [edit class-of-service rewrite-rules]
   user@switch# set ieee-802.1 custom-rw forwarding-class be2 loss-priority low code-point
   002
   ```

 Copyright © 2018, Juniper Networks, Inc.

2. Enable the rewrite rule on an interface if it is not already enabled on the desired interface:

```
[edit]
user@switch# set class-of-service interfaces interface-name unit unit rewrite-rules (dscp |
ieee-802.1) rewrite-rule-name
```

For example, to enable the rewrite rule **custom-rw** on interface **xe-0/0/24.0**:

```
[edit]
user@switch# set class-of-service interfaces xe-0/0/24 unit 0 rewrite-rules ieee-802.1
custom-rw
```

Related Documentation

- interfaces on page 656
- rewrite-rules on page 663
- Defining CoS Rewrite Rules on page 130
- Monitoring CoS Rewrite Rules on page 825

Copyright © 2018, Juniper Networks, Inc.

PART 3

Scheduling Traffic

- Using Schedulers (Node Devices) on page 139
- Using Schedulers (Interconnect Device Fabric) on page 265

Copyright © 2018, Juniper Networks, Inc.

CHAPTER 5

Using Schedulers (Node Devices)

- Understanding Default CoS Scheduling and Classification on page 140
- Understanding CoS Scheduling on QFabric System Node Device Fabric (fte) Ports on page 149
- Understanding CoS Scheduling Behavior and Configuration Considerations on page 153
- Understanding CoS Output Queue Schedulers on page 159
- Defining CoS Queue Schedulers on page 166
- Example: Configuring Queue Schedulers on page 169
- Defining CoS Queue Scheduling Priority on page 176
- Example: Configuring Queue Scheduling Priority on page 178
- Understanding CoS Traffic Control Profiles on page 182
- Understanding CoS Priority Group Scheduling on page 184
- Defining CoS Traffic Control Profiles (Priority Group Scheduling) on page 187
- Example: Configuring Traffic Control Profiles (Priority Group Scheduling) on page 188
- Understanding CoS Hierarchical Port Scheduling (ETS) on page 192
- Example: Configuring CoS Hierarchical Port Scheduling (ETS) on page 198
- Understanding CoS Priority Group and Queue Guaranteed Minimum Bandwidth on page 224
- Understanding CoS Priority Group Shaping and Queue Shaping (Maximum Bandwidth) on page 227
- Example: Configuring Minimum Guaranteed Output Bandwidth on page 229
- Troubleshooting Egress Bandwidth That Exceeds the Configured Minimum Bandwidth on page 235
- Example: Configuring Maximum Output Bandwidth on page 236
- Troubleshooting Egress Bandwidth That Exceeds the Configured Maximum Bandwidth on page 241
- Troubleshooting Egress Queue Bandwidth Impacted by Congestion on page 241
- Understanding CoS WRED Drop Profiles on page 243
- Configuring CoS WRED Drop Profiles on page 250
- Example: Configuring WRED Drop Profiles on page 252

Copyright © 2018, Juniper Networks, Inc.

- Configuring CoS Drop Profile Maps on page 258
- Example: Configuring Drop Profile Maps on page 258
- Troubleshooting a Port Reset on QFabric Systems When a Queue Stops Transmitting Traffic on page 261

Understanding Default CoS Scheduling and Classification

If you do not explicitly configure classifiers and apply them to interfaces, the switch uses the default classifier to group ingress traffic into forwarding classes. If you do not configure scheduling on an interface, the switch uses the default schedulers to provide egress port resources for traffic. Default classification maps all traffic into default forwarding classes (best-effort, fcoe, no-loss, network-control, and mcast). Each default forwarding class has a default scheduler, so that the traffic mapped to each default forwarding class receives port bandwidth, prioritization, and packet drop characteristics.

The switch supports direct port scheduling and enhanced transmission selection (ETS), also known as hierarchical port scheduling, except on QFX5200 and QFX5210 switches.

Hierarchical scheduling groups IEEE 802.1p priorities (IEEE 802.1p code points, which classifiers map to forwarding classes, which in turn are mapped to output queues) into priority groups (forwarding class sets). If you use only the default traffic scheduling and classification, the switch automatically creates a default priority group that contains all of the priorities (which are mapped to forwarding classes and output queues), and assigns 100 percent of the port output bandwidth to that priority group. The forwarding classes (queues) in the default forwarding class set receive bandwidth based on the default classifier settings. The default priority group is transparent. It does not appear in the configuration and is used for Data Center Bridging Capability Exchange (DCBX) protocol advertisement.

NOTE: If you explicitly configure one or more priority groups on an interface, any forwarding class that is not assigned to a priority group on that interface receives *no bandwidth*. This means that if you configure hierarchical scheduling on an interface, every forwarding class (priority) that you want to forward traffic on that interface must belong to a forwarding class set (priority group). ETS is not supported on QFX5200 or QFX5210 switches.

The following sections describe:

- Default Classification on page 140
- Default Scheduling on page 144
- Default DCBX Advertisement on page 147
- Default Scheduling and Classification Summary on page 148

Default Classification

On switches except QFX10000 and NFX Series devices, the default classifiers assign unicast and multicast best-effort and network-control ingress traffic to default forwarding

 Copyright © 2018, Juniper Networks, Inc.

classes and loss priorities. The switch applies default unicast IEEE 802.1, unicast DSCP, and multidestination classifiers to each interface that does not have explicitly configured classifiers.

On QFX10000 switches and NFX Series devices, the default classifiers assign ingress traffic to default forwarding classes and loss priorities. The switch applies default IEEE 802.1, DSCP, and DSCP IPv6 classifiers to each interface that does not have explicitly configured classifiers. If you do not configure and apply EXP classifiers for MPLS traffic to logical interfaces, MPLS traffic on interfaces configured as **family mpls** uses the IEEE classifier.

If you explicitly configure one type of classifier but not other types of classifiers, the system uses only the configured classifier and does not use default classifiers for other types of traffic. There are two default IEEE 802.1 classifiers: a trusted classifier for ports that are in trunk mode or tagged-access mode, and an untrusted classifier for ports that are in access mode.

NOTE: **The default classifiers apply to unicast traffic except on QFX10000 switches and NFX Series devices. Tagged-access mode does not apply to QFX10000 switches or NFX Series devices.**

Table 32 on page 80 shows the default mapping of IEEE 802.1 code-point values to forwarding classes and loss priorities for ports in trunk mode or tagged-access mode.

Table 50: Default IEEE 802.1 Classifiers for Ports in Trunk Mode or Tagged-Access Mode (Trusted Classifier)

Code Point	Forwarding Class	Loss Priority
be (000)	best-effort	low
be1 (001)	best-effort	low
ef (010)	best-effort	low
ef1 (011)	fcoe	low
af11 (100)	no-loss	low
af12 (101)	best-effort	low
nc1 (110)	network-control	low
nc2 (111)	network-control	low

Table 33 on page 81 shows the default mapping of IEEE 802.1p code-point values to forwarding classes and loss priorities for ports in access mode (all incoming traffic is mapped to best-effort forwarding classes).

NOTE: Table 33 on page 81 applies only to unicast traffic except on QFX10000 switches and NFX Series devices.

Table 51: Default IEEE 802.1 Classifiers for Ports in Access Mode (Untrusted Classifier)

Code Point	Forwarding Class	Loss Priority
000	best-effort	low
001	best-effort	low
010	best-effort	low
011	best-effort	low
100	best-effort	low
101	best-effort	low
110	best-effort	low
111	best-effort	low

Table 34 on page 81 shows the default mapping of IEEE 802.1 code-point values to multidestination (multicast, broadcast, and destination lookup fail traffic) forwarding classes and loss priorities.

NOTE: Table 34 on page 81 does not apply to QFX10000 switches or NFX Series devices.

Table 52: Default IEEE 802.1 Multidestination Classifiers

Code Point	Forwarding Class	Loss Priority
be (000)	mcast	low
be1 (001)	mcast	low
ef (010)	mcast	low
ef1 (011)	mcast	low
af11 (100)	mcast	low
af12 (101)	mcast	low
nc1 (110)	mcast	low

Copyright © 2018, Juniper Networks, Inc.

Table 52: Default IEEE 802.1 Multidestination Classifiers (continued)

Code Point	Forwarding Class	Loss Priority
nc2 (111)	mcast	low

Table 35 on page 82 shows the default mapping of DSCP code-point values to forwarding classes and loss priorities for DSCP IP and DCSP IPv6.

NOTE: Table 35 on page 82 applies only to unicast traffic except on QFX10000 switches and NFX Series devices.

Table 53: Default DSCP IP and IPv6 Classifiers

Code Point	Forwarding Class	Loss Priority
ef (101110)	best-effort	low
af11 (001010)	best-effort	low
af12 (001100)	best-effort	low
af13 (001110)	best-effort	low
af21 (010010)	best-effort	low
af22 (010100)	best-effort	low
af23 (010110)	best-effort	low
af31 (011010)	best-effort	low
af32 (011100)	best-effort	low
af33 (011110)	best-effort	low
af41 (100010)	best-effort	low
af42 (100100)	best-effort	low
af43 (100110)	best-effort	low
be (000000)	best-effort	low
cs1 (001000)	best-effort	low
cs2 (010000)	best-effort	low
cs3 (011000)	best-effort	low

Copyright © 2018, Juniper Networks, Inc.

Table 53: Default DSCP IP and IPv6 Classifiers (continued)

Code Point	Forwarding Class	Loss Priority
cs4 (100000)	best-effort	low
cs5 (101000)	best-effort	low
nc1 (110000)	network-control	low
nc2 (111000)	network-control	low

NOTE: There are no default DSCP IP or IPv6 multidestination classifiers for multidestination traffic. DSCP IPv6 multidestination classifiers are not supported for multidestination traffic.

Table 36 on page 83 shows the default mapping of MPLS EXP code-point values to forwarding classes and loss priorities, which apply only on QFX10000 switches and NFX Series devices.

Table 54: Default EXP Classifiers on QFX10000 Switches and NFX Series Devices

Code Point	Forwarding Class	Loss Priority
000	best-effort	low
001	best-effort	high
010	expedited-forwarding	low
011	expedited-forwarding	high
100	assured-forwarding	low
101	assured-forwarding	high
110	network-control	low
111	network-control	high

Default Scheduling

The default schedulers allocate egress bandwidth resources to egress traffic as shown in Table 37 on page 84:

Copyright © 2018, Juniper Networks, Inc.

Table 55: Default Scheduler Configuration

Default Scheduler and Queue Number	Transmit Rate (Guaranteed Minimum Bandwidth)	Shaping Rate (Maximum Bandwidth)	Excess Bandwidth Sharing	Priority	Buffer Size
best-effort forwarding class scheduler (queue 0)	5% 15% (QFX10000, NFX Series)	None	5% 15% (QFX10000, NFX Series)	low	5% 15% (QFX10000, NFX Series)
fcoe forwarding class scheduler (queue 3)	35%	None	35%	low	35%
no-loss forwarding class scheduler (queue 4)	35%	None	35%	low	35%
network-control forwarding class scheduler (queue 7)	5% 15% (QFX10000, NFX Series)	None	5% 15% (QFX10000, NFX Series)	low	5% 15% (QFX10000, NFX Series)
(Excluding QFX10000 and NFX Series) mcast forwarding class scheduler (queue 8)	20%	None	20%	low	20%

NOTE: By default, the minimum guaranteed bandwidth (transmit rate) determines the amount of excess (extra) bandwidth that a queue can share. Extra bandwidth is allocated to queues in proportion to the transmit rate of each queue. On switches that support the excess-rate statement, you can override the default setting and configure the excess bandwidth percentage independently of the transmit rate on queues that are not strict-high priority queues.

By default, only the four (QFX10000 switches and NFX Series devices) or five (other switches) default schedulers shown in Table 37 on page 84 have traffic mapped to them. Only the forwarding classes and queues associated with the default schedulers receive default bandwidth, based on the default scheduler transmit rate. (You can configure schedulers and forwarding classes to allocate bandwidth to other queues or to change the bandwidth and other scheduling properties of a default queue.)

On QFX10000 switches and NFX Series devices, if a forwarding class does not transport traffic, the bandwidth allocated to that forwarding class is available to other forwarding classes. Unicast and multidestination (multicast, broadcast, and destination lookup fail) traffic use the same forwarding classes and output queues.

Copyright © 2018, Juniper Networks, Inc.

On switches other than QFX10000 and NFX Series devices, multidestination queue 11 receives enough bandwidth from the default multidestination scheduler to handle CPU-generated multidestination traffic.

On QFX10000 and NFX Series devices, default scheduling is port scheduling. Default hierarchical scheduling, known as enhanced transmission selection (ETS, defined in IEEE 802.1Qaz), allocates the total port bandwidth to the four default forwarding classes served by the four default schedulers, as defined by the four default schedulers. The result is the same as direct port scheduling. Configuring hierarchical port scheduling, however, enables you to group forwarding classes that carry similar types of traffic into forwarding class sets (also called priority groups),and to assign port bandwidth to each forwarding class set. The port bandwidth assigned to the forwarding class set is then assigned to the forwarding classes within the forwarding class set. This hierarchy enables you to control port bandwidth allocation with greater granularity, and enables hierarchical sharing of extra bandwidth to better utilize link bandwidth.

Except on QFX10000 switches and NFX Series devices, default hierarchical scheduling divides the total port bandwidth between two groups of traffic: unicast traffic and multidestination traffic. By default, unicast traffic consists of queue 0 (**best-effort** forwarding class), queue 3 (**fcoe** forwarding class), queue 4 (**no-loss** forwarding class), and queue 7 (**network-control** forwarding class). Unicast traffic receives and shares a total of 80 percent of the port bandwidth. By default, multidestination traffic (**mcast** queue 8) receives a total of 20 percent of the port bandwidth. So on a 10-Gigabit port, unicast traffic receives 8-Gbps of bandwidth and multidestination traffic receives 2-Gbps of bandwidth.

NOTE: **Except on QFX5200, QFX5210, and QFX10000 switches and NFX Series devices, which do not support queue 11, multidestination queue 11 also receives a small amount of default bandwidth from the multidestination scheduler. CPU-generated multidestination traffic uses queue 11, so you might see a small number of packets egress from queue 11. In addition, in the unlikely case that firewall filter match conditions map multidestination traffic to a unicast forwarding class, that traffic uses queue 11.**

Default scheduling uses weighted round-robin (WRR) scheduling. Each queue receives a portion (weight) of the total available interface bandwidth. The scheduling weight is based on the transmit rate of the default scheduler for that queue. For example, queue 7 receives a default scheduling weight of 5 percent, or 15 percent on QFX10000 and NFX Series devices, of the available bandwidth, and queue 4 receives a default scheduling weight of 35 percent of the available bandwidth. Queues are mapped to forwarding classes, so forwarding classes receive the default bandwidth for the queues to which they are mapped.

On QFX10000 switches and NFX Series devices, for example, queue 7 is mapped to the network-control forwarding class and queue 4 is mapped to the no-loss forwarding class. Each forwarding class receives the default bandwidth for the queue to which it is mapped. Unused bandwidth is shared with other default queues.

 Copyright © 2018, Juniper Networks, Inc.

If you want non-default (unconfigured) queues to forward traffic, you should explicitly map traffic to those queues (configure the forwarding classes and queue mapping) and create schedulers to allocate bandwidth to those queues. By default, queues 1, 2, 5, and 6 are unconfigured.

Except on QFX5200, QFX5210, and QFX10000 switches and NFX Series devices, which do not support them, multidestination queues 9, 10, and 11 are unconfigured. Unconfigured queues have a default scheduling weight of 1 so that they can receive a small amount of bandwidth in case they need to forward traffic. However, queue 11 can use more of the default multidestination scheduler bandwidth if necessary to handle CPU-generated multidestination traffic.

NOTE: All four (two on QFX5200 and QFX5210 switches) multidestination queues have a scheduling weight of 1. Because by default multidestination traffic goes to queue 8, queue 8 receives almost all of the multidestination bandwidth. (There is no traffic on queue 9 and queue 10, and very little traffic on queue 11, so there is almost no competition for multidestination bandwidth.)

However, if you explicitly configure queue 9, 10, or 11 (by mapping code points to the unconfigured multidestination forwarding classes using the multidestination classifier), the explicitly configured queues share the multidestination scheduler bandwidth equally with default queue 8, because all of the queues have the same scheduling weight (1). To ensure that multidestination bandwidth is allocated to each queue properly and that the bandwidth allocation to the default queue (8) is not reduced too much, we strongly recommend that you configure a scheduler if you explicitly classify traffic into queue 9, 10, or 11.

If you map traffic to an unconfigured queue, the queue receives only the amount of excess bandwidth proportional to its default weight (1). The actual amount of bandwidth an unconfigured queue gets depends on how much bandwidth the other queues are using.

If some queues use less than their allocated amount of bandwidth, the unconfigured queues can share the unused bandwidth. Sharing unused bandwidth is one of the key advantages of hierarchical port scheduling. Configured queues have higher priority for bandwidth than unconfigured queues, so if a configured queue needs more bandwidth, then less bandwidth is available for unconfigured queues. Unconfigured queues always receive a minimum amount of bandwidth based on their scheduling weight (1). If you map traffic to an unconfigured queue, to allocate bandwidth to that queue, configure a scheduler for the forwarding class that is mapped to the queue.

Default DCBX Advertisement

When you configure hierarchical scheduling on an interface, DCBX advertises each priority group, the priorities in each priority group, and the bandwidth properties of each priority and priority group.

If you do not configure hierarchical scheduling on an interface, DCBX advertises the automatically created default priority group and its priorities. DCBX also advertises the default bandwidth allocation of the priority group, which is 100 percent of the port bandwidth.

Default Scheduling and Classification Summary

If you do not configure scheduling on an interface:

- Default classifiers classify ingress traffic.
- Default schedulers schedule egress traffic.
- DCBX advertises a single default priority group with 100 percent of the port bandwidth allocated to that priority group. All priorities (forwarding classes) are assigned to the default priority group and receive bandwidth based on their default schedulers. The default priority group is generated automatically and is not user-configurable.

Related Documentation

- Understanding CoS Packet Flow on page 25
- Understanding CoS Hierarchical Port Scheduling (ETS) on page 192
- Understanding Default CoS Settings on page 27
- *Understanding CoS Virtual Output Queues (VOQs) on QFX10000 Switches*
- Understanding Applying CoS Classifiers and Rewrite Rules to Interfaces on page 87
- Understanding DCB Features and Requirements on page 376
- Understanding Default CoS Scheduling on QFabric System Interconnect Devices (Junos OS Release 13.1 and Later Releases) on page 265
- Example: Configuring Unicast Classifiers on page 72
- Example: Configuring Queue Schedulers on page 169

Copyright © 2018, Juniper Networks, Inc.

Understanding CoS Scheduling on QFabric System Node Device Fabric (fte) Ports

Beginning with Junos OS Release 13.1, you can configure two-tier hierarchical scheduling (enhanced transmission selection, IEEE 802.1Qaz) on the fabric (fte) ports of QFabric system Node devices. Configuring CoS on Node device fabric interfaces provides increased control over traffic scheduling and helps to ensure predictable bandwidth consumption.

You can configure CoS on the following QFabric system interface types:

- Node device access interfaces (xe interfaces)—Schedule traffic on the output queues of the 10-Gigabit Ethernet access ports using standard Node device CoS scheduling configuration components, as described elsewhere in the QFX Series documentation. You can configure different scheduling for different ports and output queues.
- Node device fabric interfaces (fte interfaces)—Schedule traffic on the output queues of the 40-Gbps fabric interfaces that connect a Node device to a QFX3008-I or a QFX3600-I Interconnect device using standard Node device CoS scheduling configuration components. You can configure different scheduling for different interfaces and output queues.

This topic describes:

- Hierarchical Scheduling Architecture on QFabric System Node Devices on page 149
- Default Scheduling on Node Device Fabric Interfaces on page 150
- Configuring Scheduling on Node Device Fabric Interfaces on page 151

Hierarchical Scheduling Architecture on QFabric System Node Devices

CoS architecture on Node device access interfaces is the same as CoS architecture on standalone switch access interfaces. CoS architecture on Node device fabric interfaces is also the same as the CoS architecture on the access interfaces. You apply schedulers to queues (priorities), fc-sets (priority groups), and interfaces in the same hierarchical manner as described in "Understanding CoS Hierarchical Port Scheduling (ETS)" on page 192.

You configure scheduling on Node device fabric interfaces (fte interfaces) using the same statements and configuration constructs that you use to configure scheduling on Node device access interfaces (xe interfaces). For example, on Node device fabric interfaces you can:

- Define up to four fc-sets (three unicast, one multidestination)

  NOTE: **If the fabric interface handles strict-high priority traffic, you must define a separate fc-set (priority group) for strict-high priority traffic. Strict-high priority traffic cannot be mixed with traffic of other priorities in an fc-set. For example, you might choose to create different fc-sets for best-effort, lossless, strict-high priority, and multidestination traffic.**

- Map forwarding classes to fc-sets

- Configure scheduling for each forwarding class (scheduler)
- Configure scheduling for each fc-set (traffic control profile)

The differences in configuring CoS on Node device fabric interfaces compared to configuring CoS on Node device access interfaces are:

- You specify a Node device *fabric* interface instead of a Node device *access* interface when you apply CoS to an interface.
- You cannot attach classifiers, congestion notification profiles, or rewrite rules to fabric interfaces. Also, you cannot configure buffer settings on fabric interfaces. You can only attach fc-sets and traffic control profiles.

Default Scheduling on Node Device Fabric Interfaces

Default scheduling on Node device fabric interfaces is the same as default scheduling on Node device access interfaces. Only the default forwarding classes (best-effort, network-control, fcoe, no-loss, and multidestination) receive port bandwidth, based on the default minimum guaranteed bandwidth (transmit rate) scheduler settings for each default forwarding class.

To transport traffic on Node device fabric interfaces, the system organizes the default forwarding classes into three *class groups*. Class groups are not user-configurable. The three class groups are:

- **Unicast**—All traffic in the default forwarding classes **best-effort**, **network-control**, **fcoe**, and **no-loss** belong to this default class group.
- **Multidestination**—All traffic in the default forwarding class **mcast** belongs to this default class group.
- **Strict-high priority**—There is no default strict-high priority forwarding class, so there is no default strict-high priority class group and there is no default configuration for strict-high priority traffic.

NOTE: **If you configure strict-high priority forwarding classes, you must also configure an fc-set (priority group) for strict-high priority traffic, map the strict-high priority forwarding classes to the strict-high priority fc-set, create a scheduler for the strict-high priority traffic and map it to the strict-high priority forwarding classes, create a traffic control profile for the strict-high priority traffic, and apply the strict-high priority fc-set and traffic control profile to the appropriate fabric interfaces.**

The default forwarding classes receive port bandwidth based on their default transmit rate settings (weights). Forwarding classes that are not default forwarding classes receive no default bandwidth.

Default class group scheduling uses weighted round-robin (WRR) scheduling, in which each class group receives a portion of the total available fabric interface bandwidth based on the class group traffic type, as shown in Table 56 on page 151. Within each class

 Copyright © 2018, Juniper Networks, Inc.

group, the scheduler bandwidth allocation for individual forwarding classes is based on the default transmit rate for each forwarding class.

Table 56: Class Group Default Scheduling Properties and Membership on Node Device Fabric Interfaces

Class Group	Forwarding Class Mapping and Bandwidth Allocation (Default Transmit Rate)	Class Group Scheduling Properties (Weight)
Unicast	• **best-effort** (5%) • **fcoe** (35%) • **no-loss** (35%) • **network-control** (5%)	Traffic in the unicast class group receives an 80% weight in the weighted round-robin (WRR) calculations. After the strict-high priority class group has been served, the unicast class group receives 80% of the remaining fabric bandwidth. (If more bandwidth is available, the unicast class group can use more bandwidth.)
Multidestination	• **mcast** (20%)	Traffic in the multidestination class group receives a 20% weight in the WRR calculations. After the strict-high priority class group has been served, the multidestination class group receives 20% of the remaining fabric bandwidth. (If more bandwidth is available, the multidestination class group can use more bandwidth.)

NOTE: Strict-high priority traffic is served first, before any other traffic is served. Strict-high priority traffic receives all of the bandwidth it needs to empty its queues and therefore can starve other types of traffic during periods of high-volume strict-high priority traffic. Plan carefully and use caution when determining how much traffic to configure as strict-high priority traffic. We recommend that you always configure a shaping rate in the strict-high priority scheduler to set a maximum bandwidth limit for strict-high priority traffic.

Configuring Scheduling on Node Device Fabric Interfaces

If you do not want to use default CoS scheduling on Node device fabric interfaces, you can configure two-tier hierarchical scheduling (ETS) the same way that you configure ETS on Node device access interfaces.

- Similarities Between Node Device Fabric Interface and Access Interface Scheduling on page 151
- Differences Between Node Device Fabric Interface and Access Interface Scheduling on page 152

Similarities Between Node Device Fabric Interface and Access Interface Scheduling

Configuring scheduling on a Node device fabric interface is similar to configuring scheduling on an access interface in many ways. In both cases, you configure:

- Schedulers to specify the output scheduling for forwarding class traffic
- Scheduler maps to map schedulers to forwarding classes

- Forwarding classes (or use the default forwarding classes)
- Forwarding class sets (groups of forwarding classes that require similar CoS treatment)
- A separate fc-set for strict-high priority traffic (an fc-set cannot contain a mix of strict-high priority traffic and traffic with a different priority)
- Traffic control profiles to specify the output scheduling for fc-sets
- Traffic control profile and fc-set mapping to interfaces

On Node device fabric interfaces, you configure ETS in the same way, and ETS works the same way as on Node device access interfaces

In addition, strict-high priority queues are served first, and then the remaining port bandwidth is allocated to other traffic. Unless you configure a shaping rate in the scheduler for strict-high priority traffic, a strict-high priority queue can consume all of the port bandwidth and starve other queues, so we recommend that you always configure a shaping rate on strict-high priority traffic.

Differences Between Node Device Fabric Interface and Access Interface Scheduling

Configuring scheduling on a Node device fabric interface differs from configuring scheduling on an access interface in several ways. On fabric interfaces:

- You cannot attach classifiers.
- You cannot attach congestion notification profiles (flow control is applied automatically to lossless forwarding classes).
- You cannot attach rewrite rules.
- You cannot configure buffer settings.
- You specify a Node device fabric interface name instead of a Node device access interface name when you apply CoS to an interface.

Related Documentation

- Understanding CoS Fabric Forwarding Class Sets on page 330
- Understanding CoS Output Queue Schedulers on page 159
- Understanding CoS Hierarchical Port Scheduling (ETS) on page 192
- Understanding Default CoS Settings on page 27
- Understanding Default CoS Scheduling on QFabric System Interconnect Devices (Junos OS Release 13.1 and Later Releases) on page 265
- Example: Configuring CoS Scheduling Across the QFabric System on page 297
- Example: Configuring Queue Schedulers on page 169
- Example: Configuring CoS Hierarchical Port Scheduling (ETS) on page 198
- Example: Configuring WRED Drop Profiles on page 252
- Example: Configuring Drop Profile Maps on page 258

Copyright © 2018, Juniper Networks, Inc.

Understanding CoS Scheduling Behavior and Configuration Considerations

Many factors affect scheduling configuration and bandwidth requirements, including:

- When you configure bandwidth for a forwarding class (each forwarding class is mapped to a queue) or a forwarding class set (priority group), the switch considers only the data as the configured bandwidth. The switch does not account for the bandwidth consumed by the preamble and the interframe gap (IFG). Therefore, when you calculate and configure the bandwidth requirements for a forwarding class or for a forwarding class set, consider the preamble and the IFG as well as the data in the calculations.
- When you configure a forwarding class to carry traffic on the switch (instead of using only default forwarding classes), you must also define a scheduling policy for the user-configured forwarding class. Some switches support enhanced transmission selection (ETS) hierarchical port scheduling, some switches support direct port scheduling, and some switches support both methods of scheduling.

  For ETS hierarchical port scheduling, defining a hierarchical scheduling policy using ETS means:

  - Mapping a scheduler to the forwarding class in a scheduler map
  - Including the forwarding class in a forwarding class set
  - Associating the scheduler map with a traffic control profile
  - Attaching the traffic control profile to a forwarding class set and an interface

  On switches that support port scheduling, defining a scheduling policy means:

  - Mapping a scheduler to the forwarding class in a scheduler map.
  - Applying the scheduler map to one or more interfaces.
- On each physical interface, either all forwarding classes that are being used on the interface must have rewrite rules configured, or no forwarding classes that are being used on the interface can have rewrite rules configured. On any physical port, do not mix forwarding classes with rewrite rules and forwarding classes without rewrite rules.
- For packets that carry both an inner VLAN tag and an outer VLAN tag, rewrite rules rewrite only the outer VLAN tag.
- For ETS hierarchical port scheduling, configuring the minimum guaranteed bandwidth (**transmit-rate**) for a forwarding class does not work unless you also configure the minimum guaranteed bandwidth (**guaranteed-rate**) for the forwarding class set in the traffic control profile.

  Additionally, the sum of the transmit rates of the forwarding classes in a forwarding class set should not exceed the guaranteed rate for the forwarding class set. (You cannot guarantee a minimum bandwidth for the queues that is greater than the minimum bandwidth guaranteed for the entire set of queues.) If you configure transmit rates whose sum exceeds the guaranteed rate of the forwarding class set, the commit check fails and the system rejects the configuration.

Copyright © 2018, Juniper Networks, Inc.

- For ETS hierarchical port scheduling, the sum of the forwarding class set guaranteed rates cannot exceed the total port bandwidth. If you configure guaranteed rates whose sum exceeds the port bandwidth, the system sends a syslog message to notify you that the configuration is not valid. However, the system does not perform a commit check. If you commit a configuration in which the sum of the guaranteed rates exceeds the port bandwidth, the hierarchical scheduler behaves unpredictably.
- For ETS hierarchical port scheduling, if you configure the **guaranteed-rate** of a forwarding class set as a percentage, configure all of the transmit rates associated with that forwarding class set as percentages. In this case, if any of the transmit rates are configured as absolute values instead of percentages, the configuration is not valid and the system sends a syslog message.
- There are several factors to consider if you want to configure a strict-high priority queue (forwarding class):
  - On QFX5200, QFX3500, and QFX3600 switches and on QFabric systems, you can configure only one strict-high priority queue (forwarding class).

    On QFX5100 and EX4600 switches, you can configure only one forwarding-class-set (priority group) as strict-high priority. All queues which are part of that strict-high forwarding class set then act as strict-high queues.

    On QFX10000 switches, there is no limit to the number of strict-high priority queues you can configure.
  - You cannot configure a minimum guaranteed bandwidth (**transmit-rate**) for a strict-high priority queue on QFX5200, QFX5100, EX4600, QFX3500, and QFX3600 switches, and on QFabric systems.

    On QFX5200 and QFX10000 switches, you can set the **transmit-rate** on strict-high priority queues to set a limit on the amount of traffic that the queue treats as strict-high priority traffic. Traffic in excess of the **transmit-rate** is treated as best-effort traffic, and receives an excess bandwidth sharing weight of “1”, which is the proportion of extra bandwidth the strict-high priority queue can share on the port. Queues that are not strict-high priority queues use the transmit rate (default) or the configured excess rate to determine the proportion (weight) of extra port bandwidth the queue can share. However, you cannot configure an excess rate on a strict-high priority queue, and you cannot change the excess bandwidth sharing weight of “1” on a strict-high priority queue.

    For ETS hierarchical port scheduling, you cannot configure a minimum guaranteed bandwidth (**guaranteed-rate**) for a forwarding class set that includes a strict-high priority queue.
  - Except on QFX10000 switches, for ETS hierarchical port scheduling only, you must create a separate forwarding class set for a strict-high priority queue. On QFX10000 switches, you can mix strict-high priority and low priority queues in the same forwarding class set.
  - Except on QFX10000 switches, for ETS hierarchical port scheduling, only one forwarding class set can contain a strict-high priority queue. On QFX10000 switches, this restriction does not apply.

 Copyright © 2018, Juniper Networks, Inc.

  - Except on QFX10000 switches, for ETS hierarchical port scheduling, a strict-high priority queue cannot belong to the same forwarding class set as queues that are not strict-high priority. (You cannot mix a strict-high priority forwarding class with forwarding classes that are not strict-high priority in one forwarding class set.) On QFX10000 switches, you can mix strict-high priority and low priority queues in the same forwarding class set.
  - For ETS hierarchical port scheduling on switches that use different forwarding class sets for unicast and multidestination (multicast, broadcast, and destination lookup fail) traffic, a strict-high priority queue cannot belong to a multidestination forwarding class set.
  - On QFX10000 systems, we recommend that you always configure a transmit rate on strict-high priority queues to prevent them from starving other queues. If you do not apply a transmit rate to limit the amount of bandwidth strict-high priority queues can use, then strict-high priority queues can use all of the available port bandwidth and starve other queues on the port.

    On QFX5200, QFX5100, EX4600, QFX3500, and QFX3600 switches, and on QFabric systems, we recommend that you always apply a shaping rate to the strict-high priority queue to prevent it from starving other queues. If you do not apply a shaping rate to limit the amount of bandwidth a strict-high priority queue can use, then the strict-high priority queue can use all of the available port bandwidth and starve other queues on the port.

- On QFabric systems, if any queue that contains outgoing packets does not transmit packets for 12 consecutive seconds, the port automatically resets. Failure of a queue to transmit packets for 12 consecutive seconds might be due to:
  - A strict-high priority queue consuming all of the port bandwidth
  - Several queues consuming all of the port bandwidth
  - Any queue or port receiving continuous priority-based flow control (PFC) or 802.3x Ethernet PAUSE messages (received PFC and PAUSE messages prevent a queue or a port, respectively, from transmitting packets because of network congestion)
  - Other conditions that prevent a queue from obtaining port bandwidth for 12 consecutive seconds

  If the cause is a strict-high priority queue consuming all of the port bandwidth, use rate shaping to configure a maximum rate for the strict-high priority queue and prevent it from using all of the port bandwidth. To configure rate shaping, include the **shaping-rate (*rate* | percent *percentage*)** statement at the **[edit class-of-service schedulers *scheduler-name*]** hierarchy level and apply the shaping rate to the strict-high priority scheduler. We recommend that you always apply a shaping rate to strict-high priority traffic to prevent the strict-high priority queue from starving other queues.

  If several queues consume all of the port bandwidth, you can use a scheduler to rate shape those queues and prevent them from using all of the port bandwidth.

- For transmit rates below 1 Gbps, we recommend that you configure the transmit rate as a percentage instead of as a fixed rate. This is because the system converts fixed

rates into percentages and might round small fixed rates to a lower percentage. For example, a fixed rate of 350 Mbps is rounded down to 3 percent instead of 3.5 percent.

- When you set the maximum bandwidth for a queue or for a priority group (**shaping-rate**) at 100 Kbps or lower, the traffic shaping behavior is accurate only within +/– 20 percent of the configured **shaping-rate**.

- On QFX10000 switches, configuring rate shaping (**[set class-of-service schedulers** ***scheduler-name*** **transmit-rate** ***(rate | percentage)*** **exact**) on a LAG interface using the **[edit class-of-service interfaces** ***lag-interface-name*** **scheduler-map** ***scheduler-map-name***] statement can result in scheduled traffic streams receiving more LAG link bandwidth than expected.

  You configure rate shaping in a scheduler to set the maximum bandwidth for traffic assigned to a forwarding class on a particular output queue on a port. For example, you can use a scheduler to configure rate shaping on traffic assigned to the best-effort forwarding class mapped to queue 0, and then apply the scheduler to an interface using a scheduler map, to set the maximum bandwidth for best-effort traffic mapped to queue 0 on that port. Traffic in the best-effort forwarding can use no more than the amount of port bandwidth specified by the transmit rate when you use the **exact** option.

  LAG interfaces are composed of two or more Ethernet links bundled together to function as a single interface. The switch can hash traffic entering a LAG interface onto any member link in the LAG interface. When you configure rate shaping and apply it to a LAG interface, the way that the switch applies the rate shaping to traffic depends on how the switch hashes the traffic onto the LAG links.

  To illustrate how link hashing affects the way the switch applies a shaping rate to LAG traffic, let's look at a LAG interface (**ae0**) that has two member links (**xe-0/0/20** and **xe-0/0/21**). On LAG **ae0**, we configure rate shaping of **2g** for traffic assigned to the **best-effort** forwarding class, which is mapped to output queue **0**. When traffic in the **best-effort** forwarding class reaches the LAG interface, the switch hashes the traffic onto one of the two member links.

  If the switch hashes all of the **best-effort** traffic onto the same LAG link, the traffic receives a maximum of 2g bandwidth on that link. In this case, the intended cumulative limit of 2g for best-effort traffic on the LAG is enforced.

  However, if the switch hashes the **best-effort** traffic onto both of the LAG links, the traffic receives a maximum of 2g bandwidth on *each* LAG link, not 2g as a cumulative total for the entire LAG, so the best-effort traffic receives a maximum of 4g on the LAG, not the 2g set by the rate shaping configuration. When hashing spreads the traffic assigned to an output queue (which is mapped to a forwarding class) across multiple LAG links, the effective rate shaping (cumulative maximum bandwidth) on the LAG is:

  (number of LAG member interfaces) x (rate shaping for the output queue) = cumulative LAG rate shaping

- On switches that do not use virtual output queues (VOQs), ingress port congestion can occur during periods of egress port congestion if an ingress port forwards traffic to more than one egress port, and at least one of those egress ports experiences congestion. If this occurs, the congested egress port can cause the ingress port to

 Copyright © 2018, Juniper Networks, Inc.

exceed its fair allocation of ingress buffer resources. When the ingress port exceeds its buffer resource allocation, frames are dropped at the ingress. Ingress port frame drop affects not only the congested egress ports, but also all of the egress ports to which the congested ingress port forwards traffic.

If a congested ingress port drops traffic that is destined for one or more uncongested egress ports, configure a weighted random early detection (WRED) drop profile and apply it to the egress queue that is causing the congestion. The drop profile prevents the congested egress queue from affecting egress queues on other ports by dropping frames at the egress instead of causing congestion at the ingress port.

NOTE: **On systems that support lossless transport, do not configure drop profiles for lossless forwarding classes such as the default fcoe and no-loss forwarding classes. FCoE and other lossless traffic queues require lossless behavior. Use priority-based flow control (PFC) to prevent frame drop on lossless priorities.**

- On systems that use different classifiers for unicast and multidestination traffic and that support lossless transport, on an ingress port, do not configure classifiers that map the same IEEE 802.1p code point to both a multidestination traffic flow and a lossless unicast traffic flow (such as the default lossless **fcoe** or **no-loss** forwarding classes). Any code point used for multidestination traffic on a port should not be used to classify unicast traffic into a lossless forwarding class on the same port.

  If a multidestination traffic flow and a lossless unicast traffic flow use the same code point on a port, the multidestination traffic is treated the same way as the lossless traffic. For example, if priority-based flow control (PFC) is applied to the lossless traffic, the multidestination traffic of the same code point is also paused. During periods of congestion, treating multidestination traffic the same as lossless unicast traffic can create ingress port congestion for the multidestination traffic and affect the multidestination traffic on all of the egress ports the multidestination traffic uses.

  For example, the following configuration can cause ingress port congestion for the multidestination flow:

  1. For unicast traffic, IEEE 802.1p code point 011 is classified into the **fcoe** forwarding class:

     ```
     user@switch# set class-of-service classifiers ieee-802.1 ucast_cl forwarding-class fcoe
     loss-priority low code-points 011
     ```

  2. For multidestination traffic, IEEE 802.1p code point **011** is classified into the **mcast** forwarding class:

     ```
     user@switch# set class-of-service classifiers ieee-802.1 mcast-cl forwarding-class mcast
     loss-priority low code-points 011
     ```

  3. The unicast classifier that maps traffic with code point **011** to the **fcoe** forwarding class is mapped to interface **xe-0/0/1**:

```
user@switch# set class-of-service interfaces xe-0/0/1 unit 0 classifiers ieee-802.1 ucast_cl
```

4. The multidestination classifier that maps traffic with code point **011** to the **mcast** forwarding class is mapped to all interfaces (multidestination traffic maps to all interfaces and cannot be mapped to individual interfaces):

   ```
   user@switch# set class-of-service multi-destination classifiers ieee-802.1 mcast-cl
   ```

   Because the same code point (**011**) maps unicast traffic to a lossless traffic flow and also maps multidestination traffic to a multidestination traffic flow, the multidestination traffic flow might experience ingress port congestion during periods of congestion.

To avoid ingress port congestion, do not map the code point used by the multidestination traffic to lossless unicast traffic. For example:

1. Instead of classifying code point **011** into the **fcoe** forwarding class, classify code point **011** into the **best-effort** forwarding class:

   ```
   user@switch# set class-of-service classifiers ieee-802.1 ucast_cl forwarding-class
   best-effort loss-priority low code-points 011
   ```

2. ```
   user@switch# set class-of-service classifiers ieee-802.1 mcast-cl forwarding-class mcast
   loss-priority low code-points 011
   ```

3. ```
   user@switch# set class-of-service interfaces xe-0/0/1 unit 0 classifiers ieee-802.1 ucast_cl
   ```

4. ```
   user@switch# set class-of-service multi-destination classifiers ieee-802.1 mcast-cl
   ```

   Because the code point **011** does not map unicast traffic to a lossless traffic flow, the multidestination traffic flow does not experience ingress port congestion during periods of congestion.

The best practice is to classify unicast traffic with IEEE 802.1p code points that are also used for multidestination traffic into best-effort forwarding classes.

Copyright © 2018, Juniper Networks, Inc.
   ```

Understanding CoS Output Queue Schedulers

Output queue scheduling defines the class-of-service (CoS) properties of output queues. Output queues are mapped to forwarding classes, and classifiers map incoming traffic into forwarding classes based on IEEE 802.1p or DSCP code points. Output queue properties include the amount of interface bandwidth assigned to the queue, the size of the memory buffer allocated for storing packets, the priority of the queue, and the weighted random early detection (WRED) drop profiles associated with the queue. Queue scheduling works with priority group scheduling to create a two-tier hierarchical scheduler.

The hierarchical scheduler allocates port bandwidth to a group of queues (forwarding classes) called a priority group (forwarding class set), and queue scheduling determines the portion of the priority group's bandwidth that a particular queue can use. So the first scheduling tier is allocating port bandwidth to a forwarding class set, and the second scheduling tier is allocating forwarding class set bandwidth to forwarding classes (queues).

Scheduler maps associate queue schedulers with forwarding classes. The queue mapped to a forwarding class receives the scheduling resources assigned to that forwarding class. You associate a scheduler map with a traffic control profile, and then associate the traffic control profile with a forwarding class set (priority group) and a port interface to apply scheduling to a port. In conjunction with the priority group scheduling configured in the traffic control profile, queue scheduling configures the packet schedulers and weighted random early detection (WRED) packet drop processes for queues.

NOTE: **When you configure bandwidth for a queue or a priority group, the switch considers only the data as the configured bandwidth. The switch does not account for the bandwidth consumed by the preamble and the interframe gap (IFG). Therefore, when you calculate and configure the bandwidth requirements for a queue or for a priority group, consider the preamble and the IFG as well as the data in the calculations.**

- Output Queue Scheduling Components on page 160
- Default Schedulers on page 161
- Transmit Rate (Minimum Guaranteed Bandwidth) on page 161
- Sharing Extra Bandwidth on page 162
- Shaping Rate (Maximum Bandwidth) on page 163
- Scheduling Priority on page 163
- Scheduler Drop-Profile Maps on page 163
- Buffer Size on page 164
- Explicit Congestion Notification on page 165
- Scheduler Maps on page 165

Copyright © 2018, Juniper Networks, Inc.

Output Queue Scheduling Components

Table 57 on page 160 provides a quick reference to the scheduler components you can configure to determine the bandwidth properties of output queues (forwarding classes), and Table 58 on page 161 provides a quick reference to some related scheduling configuration components.

Table 57: Output Queue Scheduler Components

Output Queue Scheduler Component	Description
Buffer size	Sets the size of the queue buffer. See "Understanding CoS Buffer Configuration" on page 568.
Drop profile map	Maps a drop profile to a loss priority. Drop profile map components include: • Drop profile—Sets the probability of dropping packets as the queue fills up. • Loss priority—Sets the traffic loss priority to which a drop profile applies. See "Configuring CoS Drop Profile Maps" on page 258.
Explicit congestion notification	Enables explicit congestion notification (ECN) on the queue. See *Understanding CoS Explicit Congestion Notification*.
Priority	Sets the scheduling priority applied to the queue. See "Defining CoS Queue Scheduling Priority" on page 176.
Shaping rate	Sets the maximum bandwidth the queue can consume. TIP: On QFX5200 Series switches, a granularity of 64kbps is supported for the shaping rate. See "Understanding CoS Priority Group Shaping and Queue Shaping (Maximum Bandwidth)" on page 227.
Transmit rate	Sets the minimum guaranteed bandwidth for the queue. Extra bandwidth is shared among queues in proportion to the minimum guaranteed bandwidth of each queue. See "Understanding CoS Priority Group and Queue Guaranteed Minimum Bandwidth" on page 224.

Copyright © 2018, Juniper Networks, Inc.

Table 58: Other Scheduling Components

Other Scheduling Components	Description
Forwarding class	Maps traffic to an output queue. Classifiers map forwarding classes to IEEE 802.1p, DSCP, or EXP code points. A forwarding class, an output queue, and code point bits are mapped to each other and identify the same traffic. (The code point bits identify incoming traffic. Classifiers assign traffic to forwarding classes based on the code point bits. Forwarding classes are mapped to output queues. This mapping determines the output queue each class of traffic uses on the switch egress interfaces.)
Output queue	Buffers traffic before the switch forwards the traffic out the egress interface. Output queues are mapped to forwarding classes. The switch applies CoS properties defined in schedulers to output queues, by mapping forwarding classes to schedulers in scheduler maps. The queue mapped to the forwarding class has the CoS properties defined in the scheduler mapped to that forwarding class.
Scheduler map	Maps schedulers to forwarding classes (forwarding classes are mapped to queues, so a forwarding class represents a queue, and the scheduler mapped to a forwarding class determines the CoS properties of the output queue mapped to that forwarding class).
Traffic control profile	Configures scheduling for the forwarding class set (priority group), and associates a scheduler map with the forwarding class set to apply queue scheduling to the forwarding classes in the forwarding class set. Extra port bandwidth is shared among forwarding class sets in proportion to the minimum guaranteed bandwidth of each forwarding class set.
Forwarding class set	Name of a priority group. You map forwarding classes to forwarding class sets. A forwarding class set consists of one or more forwarding classes.

Default Schedulers

Each forwarding class requires a scheduler to set the CoS properties of the forwarding class and its output queue. You can use the default schedulers or you can define new schedulers for the associated forwarding classes. For any other forwarding class, you must explicitly configure a scheduler. For more information, see "Default Scheduling" on page 83.

Transmit Rate (Minimum Guaranteed Bandwidth)

The transmit rate determines the minimum guaranteed bandwidth for each forwarding class. The switch applies the minimum bandwidth guarantee to the output queue mapped to the forwarding class. The transmit rate also determines how much excess (extra) bandwidth each low-priority queue can share; each queue shares extra bandwidth in

proportion to its transmit rate. You specify the rate in bits per second as a fixed value such as 1 Mbps or as a percentage of the total forwarding class set minimum guaranteed bandwidth (the guaranteed rate set in the traffic control profile). Either the default scheduler or a scheduler you configure allocates a portion of the outgoing interface bandwidth to each forwarding class in proportion to the transmit rate.

NOTE: For transmit rates below 1 Gbps, we recommend that you configure the transmit rate as a percentage instead of as a fixed rate. This is because the system converts fixed rates into percentages and may round small fixed rates to a lower percentage. For example, a fixed rate of 350 Mbps is rounded down to 3 percent.

You cannot configure a transmit rate for a strict-high priority queue. Queues with a configured transmit rate cannot be included in a forwarding class set that has a strict-high priority queue (you cannot mix strict-high priority queues and queues that are not strict-high priority in the same forwarding class set).

The allocated bandwidth can exceed the configured minimum rate if additional bandwidth is available from other queues in the forwarding class set that are not using all of their allocated bandwidth. During periods of congestion, the configured transmit rate is the guaranteed bandwidth minimum for the queue. This behavior enables you to ensure that each queue receives the amount of bandwidth appropriate to its level of service and is also able to share unused bandwidth.

NOTE: Configuring the minimum guaranteed bandwidth (transmit rate) for a forwarding class does not work unless you also configure the minimum guaranteed bandwidth (guaranteed rate) for the forwarding class set in the traffic control profile.

Additionally, the sum of the transmit rates of the queues in a forwarding class set should not exceed the guaranteed rate for the forwarding class set. (You cannot guarantee a combined minimum bandwidth for the queues that is greater than the minimum bandwidth guaranteed for the entire set of queues.)

For more information, see "Understanding CoS Priority Group and Queue Guaranteed Minimum Bandwidth" on page 224.

Sharing Extra Bandwidth

Extra bandwidth is available to low-priority queues when a forwarding class set does not use its full amount of minimum guaranteed bandwidth (guaranteed-rate). Extra bandwidth is shared among the forwarding classes in a forwarding class set in proportion to the minimum guaranteed bandwidth (transmit-rate) of each queue.

For example, in a forwarding class set, Queue A has a transmit rate of 1 Gbps, Queue B has a transmit rate of 1 Gbps, and Queue C has a transmit rate of 2 Gbps. After servicing the minimum guaranteed bandwidth of these queues, the forwarding class set has an extra 2 Gbps of bandwidth available, and all three queues still have packets to forward.

 Copyright © 2018, Juniper Networks, Inc.

The queues receive the extra bandwidth in proportion to their transmit rates, so Queue A receives an extra 500 Mbps, Queue B receives an extra 500 Mbps, and Queue C receives an extra 1 Gbps.

Shaping Rate (Maximum Bandwidth)

The shaping rate sets the maximum bandwidth that a forwarding class can consume. You specify the rate in bits per second as a fixed value, such as 3 Mbps or as a percentage of the total forwarding class set maximum bandwidth (the shaping rate set in the traffic control profile).

The maximum bandwidth for a queue depends on the total bandwidth available to the forwarding class set to which the queue belongs, and on how much bandwidth the other queues in the forwarding class set consume.

NOTE: On QFabric systems, if any queue that contains outgoing packets does not transmit packets for 12 consecutive seconds, the port automatically resets. A strict-high priority queue (or several queues with higher priorities than the starved queue) can consume all of the port bandwidth and prevent another queue from transmitting packets. To prevent a queue from being starved for bandwidth, you can configure a shaping rate on the queue or queues to prevent them from consuming all of the port bandwidth.

NOTE: We recommend that you always configure a shaping rate in the scheduler for strict-high priority queues to prevent them from starving other queues.

For more information, see "Understanding CoS Priority Group Shaping and Queue Shaping (Maximum Bandwidth)" on page 227.

Scheduling Priority

Scheduling priority determines the order in which an interface transmits traffic from its output queues. This ensures that queues containing important traffic receive prioritized access to the outgoing interface bandwidth. The priority setting in the scheduler determines the priority for the queue.

For more information, see "Defining CoS Queue Scheduling Priority" on page 176.

Scheduler Drop-Profile Maps

Drop-profile maps associate drop profiles with queue schedulers and packet loss priorities (PLPs). Drop profiles set thresholds for dropping packets during periods of congestion, based on the queue fill level and a percentage probability of dropping packets at the specified queue fill level. At different fill levels, a drop profile sets different probabilities of dropping a packet during periods of congestion.

Classifiers assign incoming traffic to forwarding classes (which are mapped to output queues), and also assign a PLP to the incoming traffic. The PLP can be low, medium-high,

or high. You can classify traffic with different PLPs into the same forwarding class to differentiate treatment of traffic within the forwarding class.

In a drop profile map, you can configure a different drop profile for each PLP and associate (map) the drop profiles to a queue scheduler. A scheduler map maps the queue scheduler to a forwarding class (output queue). Traffic classified into the forwarding class uses the drop characteristics defined in the drop profiles that the drop profile map associates with the queue scheduler. The drop profile the traffic uses depends on the PLP that the classifier assigns to the traffic. (You can map different drop profiles to the forwarding class for different PLPs.)

In summary:

- Classifiers assign one of three PLPs (low, medium-high, high) to incoming traffic when classifiers assign traffic to a forwarding class.
- Drop profiles set thresholds for packet drop at different queue fill levels.
- Drop profile maps associate a drop profile with each PLP, and map the drop profiles to schedulers.
- Scheduler maps map schedulers to forwarding classes, and forwarding classes are mapped to output queues. The scheduler mapped to a forwarding class determines the CoS characteristics of the output queue mapped to the forwarding class, including the drop profile mapping.

Buffer Size

Most of the total system buffer space is divided into two buffer pools, shared buffers and dedicated buffers. Shared buffers are a global pool that the ports share dynamically as needed. Dedicated buffers are a reserved portion of the buffer pool that is distributed evenly to all of the ports. Each port receives an equal allocation of dedicated buffer space. The dedicated buffer allocation to ports is not configurable because it is reserved for the ports.

The queue buffers are allocated from the dedicated buffer pool assigned to the port. By default, ports divide their allocation of dedicated buffers among the egress queues in the same proportion as the default scheduler sets the minimum guaranteed transmission rates (**transmit-rate**) for traffic. Only the queues included in the default scheduler receive dedicated buffers.

If you do not use the default configuration, you can explicitly configure the queue buffer size in either of two ways:

- As a percentage—The queue receives the specified percentage of dedicated port buffers when the queue is mapped to the scheduler and the scheduler is mapped to a port.
- As a remainder—After the port services the queues that have an explicit percentage buffer size configuration, the remaining port dedicated buffer space is divided equally among the other queues to which a scheduler is attached. (No default or explicit scheduler means no dedicated buffer allocation for the queue.) If you configure a

 Copyright © 2018, Juniper Networks, Inc.

scheduler and you do not specify a buffer size as a percentage, *remainder* is the default setting.

NOTE: **The total of all of the explicitly configured buffer size percentages for all of the queues on a port cannot exceed 100 percent.**

For a complete discussion about queue buffer configuration in the context of ingress and egress port buffer configuration, see "Understanding CoS Buffer Configuration" on page 568.

Explicit Congestion Notification

Explicit congestion notification (ECN) notifies networks about congestion with the goal of reducing packet loss and delay by making the sending device decrease the transmission rate until the congestion clears, without dropping packets. ECN enables end-to-end congestion notification between two endpoints on TCP/IP based networks. ECN is disabled by default.

For more information, see *Understanding CoS Explicit Congestion Notification*.

Scheduler Maps

A scheduler map associates a forwarding class with a scheduler configuration. After configuring a scheduler, you must include it in a scheduler map, associate the scheduler map with a traffic control profile, and then associate the traffic control profile with an interface and a forwarding class set to implement the configured queue scheduling.

You can associate up to four user-defined scheduler maps with traffic control profiles. For more information, see *Default Schedulers Overview*.

Related Documentation

- Understanding Junos CoS Components on page 17
- Understanding CoS Priority Group Scheduling on page 184
- Understanding CoS Hierarchical Port Scheduling (ETS) on page 192
- Understanding CoS Buffer Configuration on page 568
- *Understanding CoS Explicit Congestion Notification*
- Understanding CoS Scheduling Behavior and Configuration Considerations on page 153
- Understanding CoS Scheduling on QFabric System Node Device Fabric (fte) Ports on page 149
- Understanding Default CoS Scheduling on QFabric System Interconnect Devices (Junos OS Release 13.1 and Later Releases) on page 265
- Configuring CoS Drop Profile Maps on page 258
- Defining CoS Queue Scheduling Priority on page 176
- Understanding CoS Priority Group Shaping and Queue Shaping (Maximum Bandwidth) on page 227

Copyright © 2018, Juniper Networks, Inc.

- Understanding CoS Priority Group and Queue Guaranteed Minimum Bandwidth on page 224

Defining CoS Queue Schedulers

Schedulers define the CoS properties of output queues (output queues are mapped to forwarding classes, and classifiers map traffic into forwarding classes based on IEEE 802.1p, DSCP, or MPLS EXP code points). Queue scheduling works with priority group scheduling to create a two-tier hierarchical scheduler. CoS scheduling properties include the amount of interface bandwidth assigned to the queue, the priority of the queue, whether explicit congestion notification (ECN) is enabled on the queue, and the WRED packet drop profiles associated with the queue.

The parameters you configure in a scheduler define the following characteristics for the queues mapped to the scheduler:

- **transmit-rate**—Minimum bandwidth, also known as the *committed information rate (CIR)*, set as a percentage rate or as an absolute value in bits per second. The transmit rate also determines the amount of excess (extra) priority group bandwidth that the queue can share. Extra priority group bandwidth is allocated among the queues in the priority group in proportion to the transmit rate of each queue.

  NOTE: Include the preamble bytes and interframe gap (IFG) bytes as well as the data bytes in your bandwidth calculations.

  NOTE: You cannot configure a transmit rate for strict-high priority queues. Queues (forwarding classes) with a configured transmit rate cannot be included in a forwarding class set that has strict-high priority queues.

- **shaping-rate**—Maximum bandwidth, also known as the *peak information rate (PIR)*, set as a percentage rate or as an absolute value in bits per second.

  NOTE: Include the preamble bytes and interframe gap (IFG) bytes as well as the data bytes in your bandwidth calculations.

- **priority**—One of two bandwidth priorities that queues associated with a scheduler can receive:
  - **low**—The scheduler has low priority.
  - **strict-high**—The scheduler has strict-high priority. You can configure only one queue as a strict-high priority queue. Strict-high priority allocates the scheduled bandwidth to the queue before any other queue receives bandwidth. Other queues receive the bandwidth that remains after the strict-high queue has been serviced.

 Copyright © 2018, Juniper Networks, Inc.

We recommend that you always apply a shaping rate to strict-high priority queues to prevent them from starving other queues. If you do not apply a shaping rate to limit the amount of bandwidth a strict-high priority queue can use, then the strict-high priority queue can use all of the available port bandwidth and starve other queues on the port.

- **drop-profile-map**—Drop profile mapping to a loss priority and protocol, to apply WRED to the scheduler and control packet drop for different packet loss priorities during periods of congestion.
- **buffer-size**—Size of the queue buffer as a percentage of the dedicated buffer space on the port, or as a proportional share of the dedicated buffer space on the port that remains after the explicitly configured queues are served.
- **explicit-congestion-notification**—Enables ECN on a best-effort queue. ECN enables end-to-end congestion notification between two ECN-enabled endpoints on TCP/IP based networks. ECN must be enabled on both endpoints and on all of the intermediate devices between the endpoints for ECN to work properly. ECN is disabled by default.

NOTE: Ingress port congestion can occur during periods of egress port congestion if an ingress port forwards traffic to more than one egress port, and at least one of those egress ports experiences congestion. If this occurs, the congested egress port can cause the ingress port to exceed its fair allocation of ingress buffer resources. When the ingress port exceeds its buffer resource allocation, frames are dropped at the ingress. Ingress port frame drop affects not only the congested egress ports, but also all of the egress ports to which the congested ingress port forwards traffic.

If a congested ingress port drops traffic that is destined for one or more uncongested egress ports, configure a weighted random early detection (WRED) drop profile and apply it to the egress queue that is causing the congestion. The drop profile prevents the congested egress queue from affecting egress queues on other ports by dropping frames at the egress instead of causing congestion at the ingress port.

NOTE: Do not configure drop profiles for the fcoe and no-loss forwarding classes. FCoE and other lossless traffic queues require lossless behavior. Use priority-based flow control (PFC) to prevent frame drop on lossless priorities.

OCX Series switches do not support lossless transport or PFC. On OCX Series switches, do not map traffic to the default lossless fcoe and no-loss forwarding classes.

To apply scheduling properties to traffic, map schedulers to forwarding classes using a scheduler map, and then associate the scheduler map with interfaces. (You associate a scheduler map with an interface using a traffic control profile; see "Example: Configuring CoS Hierarchical Port Scheduling (ETS)" on page 198 for an example of the complete hierarchical scheduling process.) Using different scheduler maps, you can map different

schedulers to the same traffic (the same forwarding class) on different interfaces, to apply different scheduling to that traffic on different interfaces.

To configure a scheduler using the CLI:

1. Name the scheduler and set the minimum guaranteed bandwidth for the queue:

   ```
   [edit class-of-service]
   user@switch# set schedulers scheduler-name transmit-rate (rate | percent percentage)
   ```

2. Set the maximum bandwidth for the queue:

   ```
   [edit class-of-service schedulers scheduler-name]
   user@switch# set shaping-rate (rate | percent percentage)
   ```

3. Set the queue priority:

   ```
   [edit class-of-service schedulers scheduler-name]
   user@switch# set priority level
   ```

4. Specify drop profiles for packet loss priorities using a drop profile map:

   ```
   [edit class-of-service schedulers scheduler-name]
   user@switch# set drop-profile-map loss-priority (low | medium-high | high) protocol protocol
   drop-profile drop-profile-name
   ```

5. Configure the size of the port dedicated buffer space for the queue:

   ```
   [edit class-of-service schedulers scheduler-name]
   user@switch# set buffer-size (percent percent | remainder)
   ```

6. Enable ECN, if desired (on best-effort traffic only):

   ```
   [edit class-of-service schedulers scheduler-name]
   user@switch# set explicit-congestion-notification
   ```

7. Configure a scheduler map to map the scheduler to a forwarding class, which applies the scheduler's properties to the traffic in that forwarding class:

   ```
   [edit class-of-service]
   user@switch# set scheduler-maps scheduler-map-name forwarding-class
   forwarding-class-name scheduler scheduler-name
   ```

8. Assign the scheduler map and its associated schedulers to one or more interfaces using hierarchical scheduling. See "Example: Configuring CoS Hierarchical Port Scheduling (ETS)" on page 198 for a detailed example of hierarchical scheduling.

   ```
   [edit class-of-service]
   ```


Copyright © 2018, Juniper Networks, Inc.

```
user@switch# set traffic-control-profiles tcp-name scheduler-map scheduler-map-name
user@switch# set interfaces interface-name forwarding-class-set fc-set-name
output-traffic-control-profile tcp-name
```

Related Documentation

- Example: Configuring CoS Hierarchical Port Scheduling (ETS) on page 198
- Example: Configuring Queue Schedulers on page 169
- Example: Configuring Minimum Guaranteed Output Bandwidth on page 229
- Example: Configuring Maximum Output Bandwidth on page 236
- *Example: Configuring ECN*
- Example: Configuring Traffic Control Profiles (Priority Group Scheduling) on page 188
- Defining CoS Queue Scheduling Priority on page 176
- Configuring CoS WRED Drop Profiles on page 250
- Monitoring CoS Scheduler Maps on page 885
- Understanding CoS Output Queue Schedulers on page 159
- Understanding CoS Priority Group Scheduling on page 184
- Understanding CoS Buffer Configuration on page 568
- *Understanding CoS Explicit Congestion Notification*

Example: Configuring Queue Schedulers

Schedulers define the CoS properties of output queues (output queues are mapped to forwarding classes, and classifiers map traffic into forwarding classes based on IEEE 802.1p or DSCP code points). Queue scheduling works with priority group scheduling to create a two-tier hierarchical scheduler. CoS scheduling properties include the amount of interface bandwidth assigned to the queue, the priority of the queue, whether explicit congestion notification (ECN) is enabled on the queue, and the WRED packet drop profiles associated with the queue.

- Requirements on page 169
- Overview on page 170
- Configuring a CoS Scheduler on page 172
- Verification on page 174

Requirements

This example uses the following hardware and software components:

- One switch (this example was tested on a Juniper Networks QFX3500 Switch)
- Junos OS Release 11.1 or later for the QFX Series or Junos OS Release 14.1X53-D20 or later for the OCX Series

Overview

Scheduler parameters define the following characteristics for the queues mapped to the scheduler:

- **transmit-rate**—Minimum bandwidth, also known as the *committed information rate (CIR)*. Each queue mapped to the scheduler receives a minimum of either the configured amount of absolute bandwidth or the configured percentage of bandwidth. The transmit rate also determines the amount of excess (extra) priority group bandwidth that the queue can share. Extra priority group bandwidth is allocated among the queues in the priority group in proportion to the transmit rate of each queue. You cannot configure a transmit rate for strict-high priority queues. Queues (forwarding classes) with a configured transmit rate cannot be included in a forwarding class set that has strict-high priority queues.

  NOTE: The **transmit-rate** setting works only if you also configure the **guaranteed-rate** in the traffic control profile that is attached to the forwarding class set to which the queue belongs. If you do not configure the **guaranteed-rate**, the **transmit-rate** does not work. The sum of all queue transmit rates in a forwarding class set should not exceed the traffic control profile guaranteed rate. If you configure transmit rates whose sum exceeds the forwarding class set guaranteed rate, the commit check fails, and the system rejects the configuration.

  NOTE: Include the preamble bytes and interframe gap bytes as well as the data bytes in your bandwidth calculations.

  NOTE: You cannot configure a transmit rate for strict-high priority queues. Queues (forwarding classes) with a configured transmit rate cannot be included in a forwarding class set that has strict-high priority queues.

- **shaping-rate**—Maximum bandwidth, also known as the *peak information rate (PIR)*. Each queue receives a maximum of the configured amount of absolute bandwidth or the configured percentage of bandwidth, even if more bandwidth is available.

  NOTE: Include the preamble bytes and interframe gap bytes as well as the data bytes in your bandwidth calculations.

- **priority**—One of two bandwidth priorities that queues associated with a scheduler can receive:
  - **low**—The scheduler has low priority.

Copyright © 2018, Juniper Networks, Inc.

- **strict-high**—The scheduler has strict-high priority. You can configure only one queue as a strict-high priority queue. Strict-high priority allocates the scheduled bandwidth to the queue before any other queue receives bandwidth. Other queues receive the bandwidth that remains after the strict-high queue has been serviced.

  We recommend that you always apply a shaping rate to strict-high priority queues to prevent them from starving other queues. If you do not apply a shaping rate to limit the amount of bandwidth a strict-high priority queue can use, then the strict-high priority queue can use all of the available port bandwidth and starve other queues on the port.

- **drop-profile-map**—Mapping of a drop profile to a loss priority and protocol to apply WRED to the scheduler.
- **buffer-size**—Size of the queue buffer as a percentage of the dedicated buffer space on the port, or as a proportional share of the dedicated buffer space on the port that remains after the explicitly configured queues are served.
- **explicit-congestion-notification**—Enables ECN on a best-effort queue. ECN enables end-to-end congestion notification between two ECN-enabled endpoints on TCP/IP based networks. ECN must be enabled on both endpoints and on all of the intermediate devices between the endpoints for ECN to work properly. ECN is disabled by default.

NOTE: Ingress port congestion can occur during periods of egress port congestion if an ingress port forwards traffic to more than one egress port, and at least one of those egress ports experiences congestion. If this occurs, the congested egress port can cause the ingress port to exceed its fair allocation of ingress buffer resources. When the ingress port exceeds its buffer resource allocation, frames are dropped at the ingress. Ingress port frame drop affects not only the congested egress ports, but also all of the egress ports to which the congested ingress port forwards traffic.

If a congested ingress port drops traffic that is destined for one or more uncongested egress ports, configure a weighted random early detection (WRED) drop profile and apply it to the egress queue that is causing the congestion. The drop profile prevents the congested egress queue from affecting egress queues on other ports by dropping frames at the egress instead of causing congestion at the ingress port.

NOTE: Do not configure drop profiles for the fcoe and no-loss forwarding classes. FCoE and other lossless traffic queues require lossless behavior. Use priority-based flow control (PFC) to prevent frame drop on lossless priorities.

OCX Series switches do not support lossless transport or PFC. On OCX Series switches, do not map traffic to the default lossless fcoe and no-loss forwarding classes.

Scheduler maps associate schedulers with forwarding classes (queues). After defining schedulers and mapping them to queues in a scheduler map, to configure hardware queue scheduling (hierarchical port scheduling) you:

1. Associate a scheduler map with a traffic control profile (a traffic control profile schedules resources for a group of forwarding classes, called a *forwarding class set* or *priority group*).

2. Attach a forwarding class and a traffic control profile to an interface.

   "Example: Configuring CoS Hierarchical Port Scheduling (ETS)" on page 198 provides a complete example of hierarchical scheduling.

You can associate up to four user-defined scheduler maps with forwarding class sets.

This process configures the bandwidth properties and WRED characteristics that you map to forwarding classes (and thus to output queues) in a scheduler map. The traffic control profile uses the scheduler CoS properties to determine the resources that should be allocated to the individual output queues from the total resources available to the priority group.

Table 59 on page 172 shows the configuration components for this example.

Table 59: Components of the Queue Scheduler Configuration Example

Component	Settings
Hardware	QFX3500 switch
Scheduler	Name: **be-sched** Transmit rate: **20%** Shaping rate: **40%** Buffer size: **20%** Priority: **low** Drop profile: **be-dp** ECN: **disable** (default)
Scheduler map	Name: **be-map** Forwarding class to associate with the **be-sched** scheduler: **best-effort**
Traffic control profile	Name: **be-tcp** NOTE: This topic does not describe how to define a traffic control profile.
Forwarding class set	Name: **lan-pg**

Configuring a CoS Scheduler

CLI Quick Configuration

To quickly configure a queue scheduler, copy the following commands, paste them in a text file, remove line breaks, change variables and details to match your network

Copyright © 2018, Juniper Networks, Inc.

configuration, and then copy and paste the commands into the CLI at the [edit] hierarchy level:

```
[edit class-of-service]
set schedulers be-sched transmit-rate percent 20
set schedulers be-sched shaping-rate percent 40
set schedulers be-sched buffer-size percent 20
set schedulers be-sched priority low
set schedulers be-sched drop-profile-map loss-priority low protocol any drop-profile be-dp
set scheduler-maps be-map forwarding-class best-effort scheduler be-sched
set traffic-control-profiles be-tcp scheduler-map be-map
set interfaces xe-0/0/7 forwarding-class-set lan-pg output-traffic-control-profile be-tcp
```

To configure a CoS scheduler:

1. Create scheduler (**be-sched**) with a minimum guaranteed bandwidth of 2 Gbps, a maximum bandwidth of 4 Gbps, and low priority, and map it to the drop profile **be-dp**:

   ```
   [edit class-of-service schedulers]
   user@switch# set be-sched transmit-rate percent 20
   user@switch# set be-sched shaping-rate percent 40
   user@switch# set be-sched buffer-size percent 20
   user@switch# set be-sched priority low
   user@switch# set be-sched drop-profile-map loss-priority low protocol any drop-profile
   be-dp
   ```

   NOTE: Because ECN is disabled by default, no ECN configuration is shown.

2. Configure scheduler map (**be-map**) to associate the scheduler (**be-sched**) with the forwarding class (**best-effort**):

   ```
   [edit class-of-service scheduler-maps]
   user@switch# set be-map forwarding-class best-effort scheduler be-sched
   ```

3. Associate the scheduler map **be-map** with a traffic control profile (**be-tcp**):

   ```
   [edit class-of-service traffic-control-profiles]
   user@switch# set be-tcp scheduler-map be-map
   ```

4. Associate the traffic control profile **be-tcp** with a forwarding class set (**lan-pg**) and a 10-Gigabit Ethernet interface (**xe-0/0/7**):

   ```
   [edit class-of-service]
   user@switch# set interfaces xe-0/0/7 forwarding-class-set lan-pg
   output-traffic-control-profile be-tcp
   ```

Verification

To verify that the queue scheduler has been created and is mapped to the correct interfaces, perform these tasks:

- Verifying the Scheduler Configuration on page 174
- Verifying the Scheduler Map Configuration on page 174
- Verifying That the Scheduler Is Associated with the Interface on page 175

Verifying the Scheduler Configuration

Purpose Verify that the queue scheduler **be-sched** has been created with a minimum guaranteed bandwidth of 2 Gbps, a maximum bandwidth of 4 Gbps, the priority set to **low**, and the drop profile **be-dp**.

Action Display the scheduler using the operational mode command **show configuration class-of-service schedulers be-sched**:

```
user@switch> show configuration class-of-service schedulers be-sched
transmit-rate percent 20;
shaping-rate percent 40;
buffer-size percent 20;
priority low;
drop-profile-map loss-priority low protocol any drop-profile be-dp;
```

Verifying the Scheduler Map Configuration

Purpose Verify that the scheduler map **be-map** has been created and associates the forwarding class **best-effort** with the scheduler **be-sched**, and also that the scheduler map is attached to the traffic control profile **be-tcp**.

Action Display the scheduler map using the operational mode command **show configuration class-of-service scheduler-maps be-map**:

```
user@switch> show configuration class-of-service scheduler-maps be-map
forwarding-class best-effort scheduler be-sched;
```

Display the traffic control profile to verify that the scheduler map **be-map** is attached using the operational mode command **show configuration class-of-service traffic-control-profiles be-tcp scheduler-map**:

```
user@switch> show configuration class-of-service traffic-control-profiles be-tcp scheduler-map
scheduler-map be-map;
```


Copyright © 2018, Juniper Networks, Inc.

NOTE: This topic does not describe how to configure a traffic control profile or its allocation of port bandwidth. Using a traffic control profile to configure the port resource allocation to the priority group is necessary to implement hierarchical scheduling.

Verifying That the Scheduler Is Associated with the Interface

Purpose Verify that the forwarding class set (**lan-pg**) and the traffic control profile (**be-tcp**) that are associated with the queue scheduler are attached to the interface **xe-0/0/7**.

Action List the interface using the operational mode command **show configuration class-of-service interfaces xe-0/0/7**:

```
user@switch> show configuration class-of-service interfaces xe-0/0/7
forwarding-class-set {
    lan-pg {
        output-traffic-control-profile be-tcp;
    }
}
```

Related Documentation

- Example: Configuring CoS Hierarchical Port Scheduling (ETS) on page 198
- Example: Configuring Minimum Guaranteed Output Bandwidth on page 229
- Example: Configuring Maximum Output Bandwidth on page 236
- Example: Configuring Traffic Control Profiles (Priority Group Scheduling) on page 188
- Example: Configuring WRED Drop Profiles on page 252
- *Example: Configuring ECN*
- Defining CoS Queue Schedulers on page 166
- Monitoring CoS Scheduler Maps on page 885
- Understanding CoS Output Queue Schedulers on page 159
- Understanding CoS Hierarchical Port Scheduling (ETS) on page 192
- Understanding CoS Scheduling on QFabric System Node Device Fabric (fte) Ports on page 149
- Understanding Default CoS Scheduling on QFabric System Interconnect Devices (Junos OS Release 13.1 and Later Releases) on page 265
- Understanding CoS Buffer Configuration on page 568

Copyright © 2018, Juniper Networks, Inc.

Defining CoS Queue Scheduling Priority

Copyright © 2018, Juniper Networks, Inc.

You can configure the scheduling priority of individual queues by specifying the priority in a scheduler, and then associating the scheduler with a queue by using a scheduler map. On QFX5100, QFX5200, EX4600, QFX3500, and QFX3600 switches, and on QFabric systems, queues can have one of two bandwidth scheduling priorities, **strict-high** priority or **low** priority. On QFX10000 Series switches, queues can also be configured as **high** priority.

NOTE: **By default, all queues are low priority queues.**

The switch services low priority queues after servicing any queue that has strict-high priority traffic or high priority traffic. Strict-high priority queues receive preferential treatment over all other queues and receive all of their configured bandwidth before other queues are serviced. Low-priority queues do not transmit traffic until strict-high priority queues are empty, and receive the bandwidth that remains after the strict-high queues have been serviced. High priority queues receive preference over low priority queues.

Different switches handle traffic configured as **strict-high** priority traffic in different ways:

- QFX5100, QFX5200, QFX3500, QFX3600, and EX4600 switches, and QFabric systems—You can configure only one queue as a strict-high priority queue.

  On these switches, we recommend that you always apply a shaping rate to strict-high priority queues to prevent them from starving other queues. If you do not apply a shaping rate to limit the amount of bandwidth a strict-high priority queue can use, then the strict-high priority queue can use all of the available port bandwidth and starve other queues on the port.

- QFX10000 switches—You can configure as many queues as you want as strict-high priority. However, keep in mind that too much strict-high priority traffic can starve low priority queues on the port.

  NOTE: **We strongly recommend that you configure a transmit rate on all strict-high priority queues to limit the amount of traffic the switch treats as strict-high priority traffic and prevent strict-high priority queues from starving other queues on the port. This is especially important if you configure more than one strict-high priority queue on a port. If you do not configure a transmit rate to limit the amount of bandwidth strict-high priority queues can use, then the strict-high priority queues can use all of the available port bandwidth and starve other queues on the port.**

  The switch treats traffic in excess of the transmit rate as best-effort traffic that receives bandwidth from the leftover (excess) port bandwidth pool. On strict-high priority queues, all traffic that exceeds the transmit rate shares in the port excess bandwidth pool based on the strict-high priority excess bandwidth sharing weight of "1", which is not configurable. The actual amount of extra bandwidth that traffic exceeding the transmit rate

receives depends on how many other queues consume excess bandwidth and the excess rates of those queues.

- To configure queue priority using the CLI:

```
[edit class-of-service]
user@switch# set schedulers scheduler-name priority level
```

Related Documentation

- Example: Configuring Queue Scheduling Priority on page 178
- Monitoring CoS Scheduler Maps on page 885

Example: Configuring Queue Scheduling Priority

You can configure the bandwidth scheduling priority of individual queues by specifying the priority in a scheduler, and then using a scheduler map to associate the scheduler with a queue.

- Requirements on page 178
- Overview on page 178
- Configuring Queue Scheduling Priority on page 180
- Verification on page 181

Requirements

This example uses the following hardware and software components:

- One switch.
- Junos OS Release 11.1 or later for the QFX Series or Junos OS Release 14.1X53-D20 or later for the OCX Series.

Overview

Queues can have one of several bandwidth priorities:

- **strict-high**—Strict-high priority allocates bandwidth to the queue before any other queue receives bandwidth. Other queues receive the bandwidth that remains after the strict-high queue has been serviced. On QFX10000 switches, you can configure as many queues as you want as strict-high priority queues. On QFX5200, QFX3500, and QFX3600 switches and on QFabric systems, you can configure only one queue as a strict-high queue. On QFX5100 and EX4600 switches, you can configure only one forwarding-class-set (priority group) as strict-high priority. All queues which are part of that strict-high forwarding class set then act as strict-high queues.

Copyright © 2018, Juniper Networks, Inc.

NOTE: On QFX5200 switches, it is not possible to support multiple queues with strict-high priority because QFX5200 doesn't support flexible hierarchical scheduling. When multiple strict-high priority queues are configured, all of those queues are treated as strict-high priority but the higher number queue among them is given highest priority.

On QFX10000 switches, if you configure strict-high priority queues on a port, we strongly recommend that you configure a transmit rate on those queues. The transmit rate sets the amount of traffic that the switch forwards as strict-high priority; traffic in excess of the transmit rate is treated as best-effort traffic that receives the queue excess rate. Even if you configure only one strict-high priority queue, we strongly recommend that you configure a transmit rate the queue to prevent it from starving other queues. If you do not configure a transmit rate to limit the amount of bandwidth a strict-high priority queue can use, then the strict-high priority queue can use all of the available port bandwidth and starve other queues on the port.

On QFX5200, QFX5100, QFX3500, QFX3600, and EX4600 switches and on QFabric systems, we recommend that you always apply a shaping rate to strict-high priority queues to prevent them from starving other queues. If you do not apply a shaping rate to limit the amount of bandwidth a strict-high priority queue can use, then the strict-high priority queue can use all of the available port bandwidth and starve other queues on the port.

NOTE: On switches that support enhanced transmission selection (ETS) hierarchical scheduling, if you use ETS and you configure a **strict-high** priority queue, you must create a forwarding class set that is dedicated only to **strict-high** priority traffic. Only one forwarding class set can contain a strict-high priority queue. Queues that are not strict-high priority cannot belong to the same forwarding class set as strict-high priority queues.

On switches that use different output queues for unicast and multidestination traffic, the multidestination forwarding class set cannot contain strict-high priority queues.

- **high** (QFX10000 Series switches only)—High priority. Traffic with high priority is serviced after any queue that has a **strict-high** priority, and before queues with low priority.
- **low**—Low priority. Traffic with low priority is serviced after any queue that has a **strict-high** priority.

NOTE: By default, all queues are low priority queues.

Table 60 on page 180 shows the configuration components for this example.

This example describes how to set the queue priority for two forwarding classes (queues) named **fcoe** and **no-loss**. Both queues have a priority of **low**. The scheduler for the **fcoe**

queue is named **fcoe-sched** and the scheduler for the **no-loss** queue is named **nl-sched**. One scheduler map, **schedmap1**, associates the schedulers to the queues.

Table 60: Components of the Queue Scheduler Priority Configuration Example

Component	Settings
Hardware	One switch
Schedulers	**fcoe-sched** for FCoE traffic **nl-sched** for no-loss traffic
Priority	**low** for FCoE traffic **low** for no-loss traffic
Scheduler map	**schedmap1**: FCoE mapping: scheduler **fcoe-sched** to forwarding class **fcoe** No-loss mapping: scheduler **nl-sched** to forwarding class **no-loss**

NOTE: OCX Series switches do not support lossless transport. On OCX Series switches, the default DSCP classifier does not map traffic to the default fcoe and no-loss forwarding classes. On an OCX Series switch, you could use this example by substituting other forwarding classes (for example, best-effort or network-control) for the fcoe and no-loss forwarding classes, and naming the schedulers appropriately. The active forwarding classes (**best-effort**, **network-control**, and **mcast**) share the unused bandwidth assigned to the **fcoe** and **no-loss** forwarding classes.

Configuring Queue Scheduling Priority

CLI Quick Configuration

To quickly configure queue scheduling priority, copy the following commands, paste them in a text file, remove line breaks, change variables and details to match your network configuration, and then copy and paste the commands into the CLI at the [edit] hierarchy level:

```
[edit class-of-service]
set schedulers fcoe-sched priority low
set schedulers nl-sched priority low
set scheduler-maps schedmap1 forwarding-class fcoe scheduler fcoe-sched
set scheduler-maps schedmap1 forwarding-class no-loss scheduler nl-sched
```

To configure queue priority using the CLI:

1. Create the FCoE scheduler with **low** priority:

```
[edit class-of-service]
user@switch# set schedulers fcoe-sched priority low
```


Copyright © 2018, Juniper Networks, Inc.

2. Create the no-loss scheduler with **low** priority:

```
[edit class-of-service]
user@switch# set schedulers nl-sched priority low
```

3. Associate the schedulers with the desired queues in the scheduler map:

```
[edit class-of-service]
user@switch# set scheduler-maps schedmap1 forwarding-class fcoe scheduler fcoe-sched
user@switch# set scheduler-maps schedmap1 forwarding-class no-loss scheduler nl-sched
```

Verification

To verify that you configured the queue scheduling priority for bandwidth and mapped the schedulers to the correct forwarding classes, perform these tasks:

- Verifying the Queue Scheduling Priority on page 181
- Verifying the Scheduler-to-Forwarding-Class Mapping on page 181

Verifying the Queue Scheduling Priority

Purpose Verify that you configured the queue schedulers **fcoe-sched** and **nl-sched** with **low** queue scheduling priority.

Action Display the **fcoe-sched** scheduler priority configuration using the operational mode command **show configuration class-of-service schedulers fcoe-sched priority**:

```
user@switch> show configuration class-of-service schedulers fcoe-sched priority
priority low;
```

Display the **nl-sched** scheduler priority configuration using the operational mode command **show configuration class-of-service schedulers nl-sched priority**:

```
user@switch> show configuration class-of-service schedulers nl-sched priority
priority low;
```

Verifying the Scheduler-to-Forwarding-Class Mapping

Purpose Verify that you configured the scheduler map **schedmap1** to map scheduler **fcoe-sched** to forwarding class **fcoe** and schedule **nl-sched** to forwarding class **no-loss**.

Action Display the scheduler map **schedmap1** using the operational mode command **show configuration class-of-service scheduler-maps schedmap1**:

```
user@switch> show configuration class-of-service scheduler-maps schedmap1
```

```
forwarding-class fcoe scheduler fcoe-sched;
forwarding-class no-loss scheduler nl-sched;
```

Related Documentation

- Defining CoS Queue Scheduling Priority on page 176
- Monitoring CoS Scheduler Maps on page 885

Understanding CoS Traffic Control Profiles

A traffic control profile defines the output bandwidth and scheduling characteristics of forwarding class sets (priority groups). The forwarding classes (which are mapped to output queues) that belong to a forwarding class set (fc-set) share the bandwidth that you assign to the fc-set in the traffic control profile.

This two-tier hierarchical scheduling architecture provides flexibility in allocating resources among forwarding classes, and also:

- Assigns a portion of port bandwidth to an fc-set. You define the port resources for the fc-set in a traffic control profile.
- Allocates fc-set bandwidth among the forwarding classes (queues) that belong to the fc-set. A scheduler map attached to the traffic control profile defines the amount of the fc-set's resources that each forwarding class can use.

Attaching an fc-set and a traffic control profile to a port defines the hierarchical scheduling properties of the group and the forwarding classes that belong to the group.

The ability to create fc-sets supports enhanced transmission selection (ETS), which is described in IEEE 802.1Qaz. When an fc-set does not use its allocated port bandwidth, ETS shares the excess port bandwidth among other fc-sets on the port in proportion to their guaranteed minimum bandwidth (guaranteed rate). This utilizes the port bandwidth better than scheduling schemes that reserve bandwidth for groups even if that bandwidth is not used. ETS shares unused port bandwidth, so traffic groups that need extra bandwidth can use it if the bandwidth is available, while preserving the ability to specify the minimum guaranteed bandwidth for traffic groups.

Traffic control profiles define the following CoS properties for fc-sets:

Copyright © 2018, Juniper Networks, Inc.

- Minimum guaranteed bandwidth—Also known as the *committed information rate (CIR)*. This is the minimum amount of port bandwidth the priority group receives. Priorities in the priority group receive their minimum guaranteed bandwidth as a portion of the priority group's minimum guaranteed bandwidth. The **guaranteed-rate** statement defines the minimum guaranteed bandwidth.

  NOTE: **You cannot apply a traffic control profile with a minimum guaranteed bandwidth to a priority group that includes strict-high priority queues.**

- Shared excess (extra) bandwidth—When the priority groups on a port do not consume the full amount of bandwidth allocated to them or there is unallocated link bandwidth available, priority groups can contend for that extra bandwidth if they need it. Priorities in the priority group contend for extra bandwidth as a portion of the priority group's extra bandwidth. The amount of extra bandwidth for which a priority group can contend is proportional to the priority group's guaranteed minimum bandwidth (guaranteed rate).
- Maximum bandwidth—Also known as *peak information rate (PIR)*. This is the maximum amount of port bandwidth the priority group receives. Priorities in the priority group receive their maximum bandwidth as a portion of the priority group's maximum bandwidth. The **shaping-rate** statement defines the maximum bandwidth.
- Queue scheduling—Each traffic control profile includes a scheduler map. The scheduler map maps forwarding classes (priorities) to schedulers to define the scheduling characteristics of the individual forwarding classes in the fc-set. The resources scheduled for each forwarding class represent portions of the resources that the traffic control profile schedules for the entire fc-set, not portions of the total link bandwidth. The **scheduler-maps** statement defines the mapping of forwarding classes to schedulers.

Related Documentation

- Understanding CoS Hierarchical Port Scheduling (ETS) on page 192
- Example: Configuring CoS Hierarchical Port Scheduling (ETS) on page 198
- Example: Configuring Traffic Control Profiles (Priority Group Scheduling) on page 188
- Defining CoS Traffic Control Profiles (Priority Group Scheduling) on page 187

Understanding CoS Priority Group Scheduling

Priority group scheduling defines the class-of-service (CoS) properties of a group of output queues (priorities). Priority group scheduling works with output queue scheduling to create a two-tier hierarchical scheduler. The hierarchical scheduler allocates bandwidth to a group of queues (a priority group, called a forwarding class set in Junos OS configuration). Queue scheduling determines the portion of the priority group bandwidth that the particular queue can use.

You configure priority group scheduling in a traffic control profile and then associate the traffic control profile with a forwarding class set and an interface. You attach a scheduler map to the traffic control profile to specify the queue scheduling characteristics.

NOTE: When you configure bandwidth for a queue or a priority group, the switch considers only the data as the configured bandwidth. The switch does not account for the bandwidth consumed by the preamble and the interframe gap (IFG). Therefore, when you calculate and configure the bandwidth requirements for a queue or for a priority group, consider the preamble and the IFG as well as the data in the calculations.

- Priority Group Scheduling Components on page 184
- Default Traffic Control Profile on page 185
- Guaranteed Rate (Minimum Guaranteed Bandwidth) on page 185
- Sharing Extra Bandwidth on page 185
- Shaping Rate (Maximum Bandwidth) on page 186
- Scheduler Maps on page 186

Priority Group Scheduling Components

Table 61 on page 184 provides a quick reference to the traffic control profile components you can configure to determine the bandwidth properties of priority groups, and Table 62 on page 185 provides a quick reference to some related scheduling configuration components.

Table 61: Priority Group Scheduler Components

Traffic Control Profile Component	Description
Guaranteed rate	Sets the minimum guaranteed port bandwidth for the priority group. Extra port bandwidth is shared among priority groups in proportion to the guaranteed rate of each priority group on the port.
Shaping rate	Sets the maximum port bandwidth the priority group can consume.
Scheduler map	Maps schedulers to queues (forwarding classes, also called priorities). This determines the portion of the priority group bandwidth that a queue receives.

Copyright © 2018, Juniper Networks, Inc.

Table 62: Other Scheduling Components

Other Scheduling Components	Description
Forwarding class	Maps traffic to a queue (priority).
Forwarding class set	Name of a priority group. You map forwarding classes to priority groups. A forwarding class set consists of one or more forwarding classes.
Scheduler	Sets the bandwidth and scheduling priority of individual queues (forwarding classes).

Default Traffic Control Profile

There is no default traffic control profile.

Guaranteed Rate (Minimum Guaranteed Bandwidth)

The guaranteed rate determines the minimum guaranteed bandwidth for each priority group. It also determines how much excess (extra) port bandwidth the priority group can share; each priority group shares extra port bandwidth in proportion to its guaranteed rate. You specify the rate in bits per second as a fixed value such as 3 Mbps or as a percentage of the total port bandwidth.

The minimum transmission bandwidth can exceed the configured rate if additional bandwidth is available from other priority groups on the port. In case of congestion, the configured guaranteed rate is guaranteed for the priority group. This property enables you to ensure that each priority group receives the amount of bandwidth appropriate to its level of service.

NOTE: Configuring the minimum guaranteed bandwidth (transmit rate) for a forwarding class does not work unless you also configure the minimum guaranteed bandwidth (guaranteed rate) for the forwarding class set in the traffic control profile.

Additionally, the sum of the transmit rates of the queues in a forwarding class set should not exceed the guaranteed rate for the forwarding class set. (You cannot guarantee a minimum bandwidth for the queues that is greater than the minimum bandwidth guaranteed for the entire set of queues.)

You cannot configure a guaranteed rate for forwarding class sets that include strict-high priority queues.

Sharing Extra Bandwidth

Extra bandwidth is available to priority groups when the priority groups do not use the full amount of available port bandwidth. This extra port bandwidth is shared among the priority groups based on the minimum guaranteed bandwidth of each priority group.

Copyright © 2018, Juniper Networks, Inc.

For example, Port A has three priority groups: fc-set-1, fc-set-2, and fc-set-3. Fc-set-1 has a guaranteed rate of 2 Gbps, fc-set-2 has a guaranteed rate of 2 Gbps, and fc-set-3 has a guaranteed rate of 4 Gbps. After servicing the minimum guaranteed bandwidth of these priority groups, the port has an extra 2 Gbps of available bandwidth, and all three priority groups have still have packets to forward. The priority groups receive the extra bandwidth in proportion to their guaranteed rates, so fc-set-1 receives an extra 500 Mbps, fc-set-2 receives an extra 500 Mbps, and fc-set-3 receives an extra 1 Gbps.

Shaping Rate (Maximum Bandwidth)

The shaping rate determines the maximum bandwidth the priority group can consume. You specify the rate in bits per second as a fixed value such as 5 Mbps or as a percentage of the total port bandwidth.

The maximum bandwidth for a priority group depends on the total bandwidth available on the port and how much bandwidth the other priority groups on the port consume.

Scheduler Maps

A scheduler map maps schedulers to queues. When you associate a scheduler map with a traffic control profile, then associate the traffic control profile with an interface and a forwarding class set, the scheduling defined by the scheduler map determines the portion of the priority group resources that each individual queue can use.

You can associate up to four user-defined scheduler maps with traffic control profiles.

Related Documentation

- Understanding Junos CoS Components on page 17
- Understanding CoS Output Queue Schedulers on page 159
- Understanding CoS Hierarchical Port Scheduling (ETS) on page 192
- Understanding CoS Scheduling Behavior and Configuration Considerations on page 153
- Understanding CoS Scheduling on QFabric System Node Device Fabric (fte) Ports on page 149
- Understanding Default CoS Scheduling on QFabric System Interconnect Devices (Junos OS Release 13.1 and Later Releases) on page 265
- Example: Configuring CoS Hierarchical Port Scheduling (ETS) on page 198
- Example: Configuring Minimum Guaranteed Output Bandwidth on page 229
- Example: Configuring Maximum Output Bandwidth on page 236
- Example: Configuring Queue Schedulers on page 169
- Example: Configuring Traffic Control Profiles (Priority Group Scheduling) on page 188
- Example: Configuring WRED Drop Profiles on page 252
- Example: Configuring Drop Profile Maps on page 258

Copyright © 2018, Juniper Networks, Inc.

Defining CoS Traffic Control Profiles (Priority Group Scheduling)

A traffic control profile defines the output bandwidth and scheduling characteristics of forwarding class sets (priority groups). The forwarding classes (which are mapped to output queues) contained in a forwarding class set (fc-set) share the bandwidth resources that you configure in the traffic control profile. A scheduler map associates forwarding classes with schedulers to define how the individual forwarding classes that belong to an fc-set share the bandwidth allocated to that fc-set.

The parameters you configure in a traffic control profile define the following characteristics for the fc-set:

- **guaranteed-rate**—Minimum bandwidth, also known as the *committed information rate (CIR)*. The guaranteed rate also determines the amount of excess (extra) port bandwidth that the fc-set can share. Extra port bandwidth is allocated among the fc-sets on a port in proportion to the guaranteed rate of each fc-set.

  NOTE: **You cannot configure a guaranteed rate for a, fc-set that includes strict-high priority queues. If the traffic control profile is for an fc-set that contains strict-high priority queues, do not configure a guaranteed rate.**

- **shaping-rate**—Maximum bandwidth, also known as the *peak information rate (PIR)*.
- **scheduler-map**—Bandwidth and scheduling characteristics for the queues, defined by mapping forwarding classes to schedulers. (The queue scheduling characteristics represent amounts or percentages of the fc-set bandwidth, not the amounts or percentages of total link bandwidth.)

  NOTE: **Because a port can have more than one fc-set, when you assign resources to an fc-set, keep in mind that the total port bandwidth must serve all of the queues associated with that port.**

To configure a traffic control profile using the CLI:

1. Name the traffic control profile and define the minimum guaranteed bandwidth for the fc-set:

   ```
   [edit class-of-service ]
   user@switch# set traffic-control-profiles traffic-control-profile-name guaranteed-rate (rate
   | percent percentage)
   ```

2. Define the maximum bandwidth for the fc-set:

   ```
   [edit class-of-service traffic-control-profiles traffic-control-profile-name]
   user@switch# set shaping-rate (rate | percent percentage)
   ```

3. Attach a scheduler map to the traffic control profile:

```
[edit class-of-service traffic-control-profiles traffic-control-profile-name]
user@switch# set scheduler-map scheduler-map-name
```

Related Documentation

- Example: Configuring CoS Hierarchical Port Scheduling (ETS) on page 198
- Example: Configuring Traffic Control Profiles (Priority Group Scheduling) on page 188
- Example: Configuring Minimum Guaranteed Output Bandwidth on page 229
- Example: Configuring Maximum Output Bandwidth on page 236
- Defining CoS Queue Schedulers on page 166
- Understanding CoS Traffic Control Profiles on page 182

Example: Configuring Traffic Control Profiles (Priority Group Scheduling)

A traffic control profile defines the output bandwidth and scheduling characteristics of forwarding class sets (priority groups). The forwarding classes (queues) mapped to a forwarding class set share the bandwidth resources that you configure in the traffic control profile. A scheduler map associates forwarding classes with schedulers to define how the individual queues in a forwarding class set share the bandwidth allocated to that forwarding class set.

- Requirements on page 188
- Overview on page 188
- Configuring a Traffic Control Profile on page 190
- Verification on page 191

Requirements

This example uses the following hardware and software components:

- A Juniper Networks QFX3500 Switch
- Junos OS Release 11.1 or later for the QFX Series

Overview

The parameters you configure in a traffic control profile define the following characteristics for the priority group:

- **guaranteed-rate**—Minimum bandwidth, also known as the *committed information rate (CIR)*. Each fc-set receives a minimum of either the configured amount of absolute bandwidth or the configured percentage of bandwidth. The guaranteed rate also determines the amount of excess (extra) port bandwidth that the fc-set can share. Extra port bandwidth is allocated among the fc-sets on a port in proportion to the guaranteed rate of each fc-set.

Copyright © 2018, Juniper Networks, Inc.

NOTE: In order for the transmit-rate option (minimum bandwidth for a queue that you set using scheduler configuration) to work properly, you must configure the guaranteed-rate for the fc-set. If an fc-set does not have a guaranteed minimum bandwidth, the forwarding classes that belong to the fc-set cannot have a guaranteed minimum bandwidth.

NOTE: Include the preamble bytes and interframe gap bytes as well as the data bytes in your bandwidth calculations.

- **shaping-rate**—Maximum bandwidth, also known as the *peak information rate (PIR)*. Each fc-set receives a maximum of the configured amount of absolute bandwidth or the configured percentage of bandwidth, even if more bandwidth is available.

  NOTE: Include the preamble bytes and interframe gap bytes as well as the data bytes in your bandwidth calculations.

- **scheduler-map**—Bandwidth and scheduling characteristics for the queues, defined by mapping forwarding classes to schedulers. (The queue scheduling characteristics represent amounts or percentages of the fc-set bandwidth, not the amounts or percentages of total link bandwidth.)

NOTE: Because a port can have more than one fc-set, when you assign resources to an fc-set, keep in mind that the total port bandwidth must serve all of the queues associated with that port.

For example, if you map three fc-sets to a 10-Gigabit Ethernet port, the queues associated with all three of the fc-sets share the 10-Gbps bandwidth as defined by the traffic control profiles. Therefore, the total combined **guaranteed-rate** value of the three fc-sets should not exceed 10 Gbps. If you configure guaranteed rates whose sum exceeds the port bandwidth, the system sends a syslog message to notify you that the configuration is not valid. However, the system does not perform a commit check. If you commit a configuration in which the sum of the guaranteed rates exceeds the port bandwidth, the hierarchical scheduler behaves unpredictably.

The sum of the forwarding class (queue) transmit rates cannot exceed the total **guaranteed-rate** of the fc-set to which the forwarding classes belong. If you configure transmit rates whose sum exceeds the fc-set guaranteed rate, the commit check fails and the system rejects the configuration.

If you configure the **guaranteed-rate** of an fc-set as a percentage, configure all of the transmit rates associated with that fc-set as percentages. In this case, if any of the transmit rates are configured as absolute values instead of percentages, the configuration is not valid and the system sends a syslog message.

Configuring a Traffic Control Profile

This example describes how to configure a traffic control profile named **san-tcp** with a scheduler map named **san-map1** and allocate to it a minimum bandwidth of 4 Gbps and a maximum bandwidth of 8 Gbps:

1. Create the traffic control profile and set the **guaranteed-rate** (minimum guaranteed bandwidth) to **4g**:

   ```
   [edit class-of-service]
   user@switch# set traffic-control-profiles san-tcp guaranteed-rate 4g
   ```

2. Set the **shaping-rate** (maximum guaranteed bandwidth) to **8g**:

   ```
   [edit class-of-service]
   user@switch# set traffic-control-profiles san-tcp shaping-rate 8g
   ```

3. Associate the scheduler map **san-map1** with the traffic control profile:

   ```
   [edit class-of-service]
   user@switch# set traffic-control-profiles san-tcp scheduler-map san-map1
   ```


Copyright © 2018, Juniper Networks, Inc.

Verification

Verifying the Traffic Control Profile Configuration

Purpose Verify that you created the traffic control profile **san-tcp** with a minimum guaranteed bandwidth of 4 Gbps, a maximum bandwidth of 8 Gbps, and the scheduler map **san-map1**.

Action List the traffic control profile using the operational mode command **show configuration class-of-service traffic-control-profiles san-tcp**:

```
user@switch> show configuration class-of-service traffic-control-profiles san-tcp
scheduler-map san-map1;
shaping-rate percent 8g;
guaranteed-rate 4g;
```

Related Documentation

- Example: Configuring CoS Hierarchical Port Scheduling (ETS) on page 198
- Example: Configuring Minimum Guaranteed Output Bandwidth on page 229
- Example: Configuring Maximum Output Bandwidth on page 236
- Example: Configuring Queue Schedulers on page 169
- Defining CoS Traffic Control Profiles (Priority Group Scheduling) on page 187
- Understanding CoS Traffic Control Profiles on page 182
- Understanding CoS Hierarchical Port Scheduling (ETS) on page 192

Copyright © 2018, Juniper Networks, Inc.

Understanding CoS Hierarchical Port Scheduling (ETS)

Scheduling defines the class-of-service (CoS) properties of output queues. Output queues are mapped to forwarding classes. CoS scheduler properties include the amount of interface bandwidth assigned to the queue, the queue priority, and the drop profiles associated with the queue.

Hierarchical port scheduling is a two-tier process that provides better port bandwidth utilization and greater flexibility to allocate resources to queues (forwarding classes) and to groups of queues (forwarding class sets). Hierarchical scheduling includes the Junos OS implementation of enhanced transmission selection (ETS), as described in IEEE 802.1Qaz.

NOTE: All QFX Series devices use ETS scheduling, except for QFX5120, QFX5200, and QFX5210 switches.

Starting with Junos OS 17.3, QFX10000 devices support ETS scheduling.

EX4600 switches use ETS scheduling while EX4650 switches do not.

Video: What is Enhanced Transmission Selection?

This topic describes:

- Hierarchical Scheduling Tiers on page 192
- Hierarchical Scheduling and ETS on page 193
- ETS Advertisement in DCBX on page 195
- Hierarchical Scheduling Process on page 195
- Strict-High Priority Queues and Hierarchical Scheduling on page 197
- Default Hierarchical Scheduling on page 197

Hierarchical Scheduling Tiers

The two tiers used in hierarchical scheduling are priorities and priority groups, as shown in Table 63 on page 193.

Copyright © 2018, Juniper Networks, Inc.

Table 63: Hierarchical Scheduling Tiers

Junos OS Configuration Construct	Equivalent ETS Construct	Description
Forwarding class	Priority	Think about priorities (forwarding classes) as output queues. You map forwarding classes to queues, so each forwarding class represents an output queue. When you use a classifier to map a forwarding class to an IEEE 802.1p code point, the code point identifies that traffic's priority for priority-based flow control (PFC). Thus the forwarding class, the queue mapped to the forwarding class, and the priority (code point) mapped to the forwarding class all identify the same traffic. NOTE: OCX Series switches do not support lossless transport or PFC.
Forwarding class set	Priority group	Priority groups (forwarding class sets) are groups of priorities (forwarding classes). Forwarding class membership in a forwarding class set defines the priority group to which each priority belongs. You can configure up to three unicast priority groups and one multicast priority group.

You apply scheduling properties to each hierarchical scheduling tier as descried in the next section.

NOTE: If you explicitly configure one or more priority groups on an interface, any priority (forwarding class) that is not assigned to a priority group (forwarding class set) on that interface is assigned to an automatically generated default priority group and receives *no bandwidth*. This means that if you configure hierarchical scheduling on an interface, every forwarding class that you want to forward traffic on that interface must belong to a forwarding class set.

NOTE: On OCX Series switches, by default, classifiers use DSCP code points to map traffic to forwarding classes. However, hierarchical scheduling works in the same manner as when you use IEEE 802.1p code points to classify traffic. The OCX Series classifies traffic into forwarding classes based on DSCP code points, the forwarding classes are mapped to forwarding class sets, and you apply scheduling properties to each of the two tiers.

Hierarchical Scheduling and ETS

Two-tier hierarchical scheduling manages bandwidth efficiently by enabling you to define the CoS properties for each priority group and for each priority. The first tier of the hierarchical scheduler allocates port bandwidth to a priority group. The second tier of

the hierarchical scheduler determines the portion of the priority group bandwidth that a priority (queue) can use.

The CoS properties of a priority group define the amount of port bandwidth resources available to the queues in that priority group. The CoS properties you configure for each queue specify the amount of the bandwidth available to the queue from the bandwidth allocated to the priority group. Figure 5 on page 194 shows the relationship of port resource allocation to priority groups, and priority group resource allocation to queues (priorities).

Figure 5: Hierarchical Scheduling Tiers

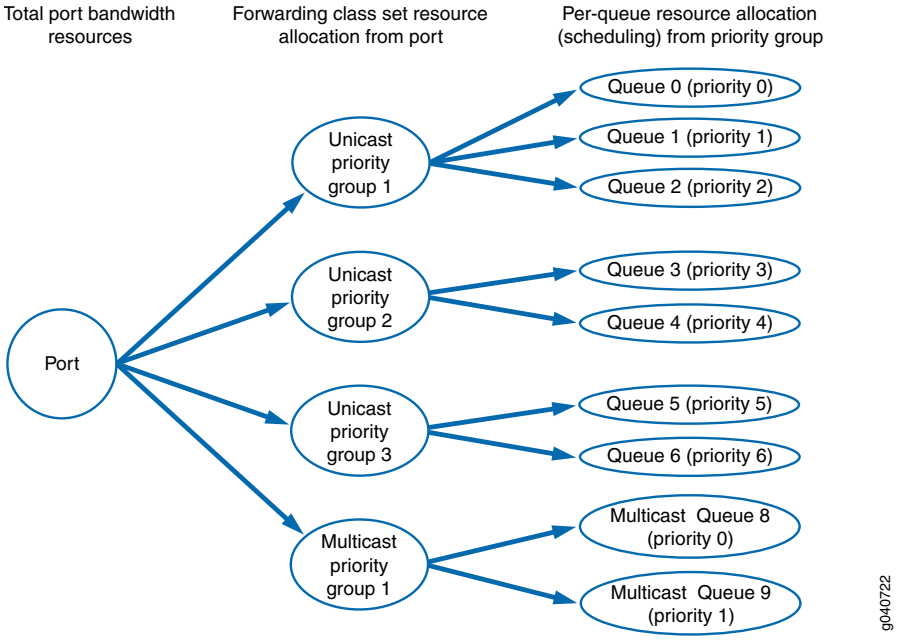

If a queue (priority) does not use its allocated bandwidth, ETS shares the unused bandwidth among the other queues in the priority group in proportion to the minimum guaranteed rate (transmit rate) scheduled for each queue. If a priority group does not use its allocated bandwidth, ETS shares the unused bandwidth among the priority groups on the port in proportion to the minimum guaranteed rate (guaranteed rate) scheduled for each priority group.

In this way, ETS improves link bandwidth utilization, and it provides each queue and each priority group with the maximum available bandwidth. For example, priorities that consist of bursty traffic can share bandwidth during periods of low traffic transmission, instead of reserving their entire bandwidth allocation when traffic loads are light.

NOTE: The available link bandwidth is the bandwidth remaining after servicing strict-high priority flows. Strict-high priority takes precedence over all other traffic. We recommend that you configure a shaping-rate (transmit-rate on QFX10000 switches) to limit the maximum amount of bandwidth that a strict-high priority forwarding class can use to prevent starving other queues.

Copyright © 2018, Juniper Networks, Inc.

ETS Advertisement in DCBX

When you configure hierarchical scheduling on a port, Data Center Bridging Capability Exchange protocol (DCBX) advertises:

- Each priority group
- The priorities in each priority group
- The bandwidth properties of each priority group and priority

When you configure hierarchical scheduling on a port, any priority that is not part of an explicitly configured priority group is assigned to the automatically generated default priority group and receives no bandwidth. The default priority group is transparent. It does not appear in the configuration.

NOTE: **OCX Series switches do support DCBX, so hierarchical scheduling information is not exchanged with connected peers on OCX Series switches.**

Hierarchical Scheduling Process

Hierarchical scheduling consists of multiple configuration steps that create the priorities and the priority groups, schedule their resources, and assign them to interfaces. The steps below correspond to the six blocks in the packet flow diagram shown in Figure 6 on page 196:

1. Packet classification:
   - Configure classification of incoming traffic into forwarding classes (priorities). This consists of either using the default classifiers or configuring classifiers to map code points and loss priorities to the forwarding classes.
   - Apply the classifiers to ingress interfaces or use the default classifiers. Applying a classifier to an interface groups incoming traffic on the interface into forwarding classes and loss priorities, by applying the classifier code point mapping to the incoming traffic.
2. Configure the output queues for the forwarding classes (priorities). This consists of either using the default forwarding classes and forwarding-class-to-queue mapping, or creating your own forwarding classes and mapping them to output queues.
3. Allocate resources to the forwarding classes:
   - Define resources for the priorities. This consists of configuring schedulers to set minimum guaranteed bandwidth, maximum bandwidth, drop profiles for Weighted Random Early Detection (WRED), and bandwidth priority to apply to a forwarding class. Extra bandwidth is shared among queues in proportion to the minimum guaranteed bandwidth (transmit rate) of each queue.
   - Map resources to priorities. This consists of mapping forwarding classes to schedulers, using a scheduler map.

4. Configure priority groups. This consists of mapping forwarding classes (priorities) to forwarding class sets (priority groups) to define the priorities that belong to each priority group.

5. Define resources for the priority groups. This consists of configuring traffic control profiles to set minimum guaranteed bandwidth (guaranteed-rate) and maximum bandwidth (shaping-rate on switches other than QFX10000 switches, transmit-rate on QFX10000 switches) for a priority group. Traffic control profiles also specify a scheduler map, which defines the resources (schedulers) mapped to the priorities in the priority group. Extra port bandwidth is shared among priority groups in proportion to the minimum guaranteed bandwidth of each priority group.

   The traffic control profile bandwidth settings determine the port resources available to the priority group. The schedulers specified in the scheduler map determine the amount of priority group resources that each priority receives.

   NOTE: QFX10000 switches do not support defining a shaping rate for priority groups. Instead, set the maximum bandwidth for a priority group by defining a transmit rate. See transmit-rate.

6. Apply hierarchical scheduling to a port. This consists of attaching one or more priority groups (forwarding class sets) to an interface. For each priority group, you also attach a traffic control profile, which contains the scheduling properties of the priority group and the priorities in the priority group. Different priority groups on the same port can use different traffic control profiles, which provides fine tuned control of scheduling for each queue on each interface.

Figure 6: Hierarchical Scheduling Packet Flow

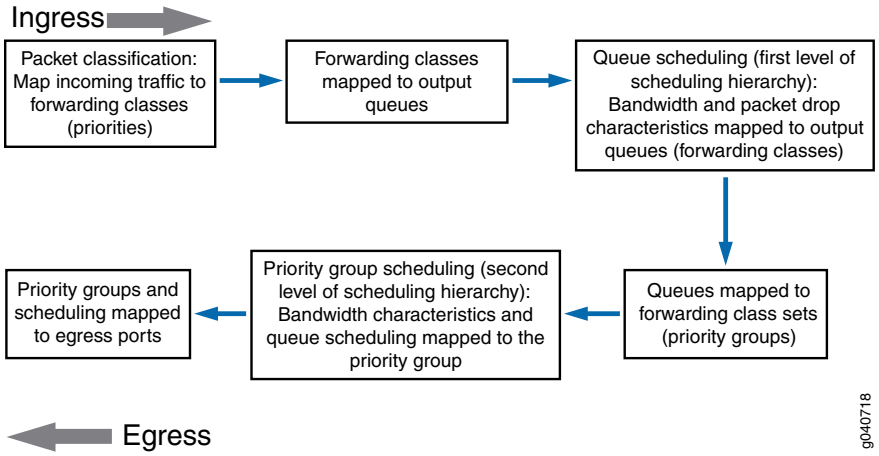

Copyright © 2018, Juniper Networks, Inc.

Strict-High Priority Queues and Hierarchical Scheduling

If you configure a strict-high priority queue, you must observe the following rules:

- You must create a separate forwarding class set (priority group) for the strict-high priority queue.
- Only one forwarding class set can contain strict-high priority queues.
- Strict-high priority queues cannot belong to the same forwarding class set as queues that are not strict-high priority.
- A strict-high priority queue cannot belong to a multidestination forwarding class set.
- We recommend that you always apply a **shaping-rate** (**transmit-rate** on QFX10000 switches) to strict-high priority queues to limit the amount of bandwidth a strict-high priority queue can use. If you do not limit the amount of bandwidth a strict-high priority queue can use, then the strict-high priority queue can use all of the available port bandwidth and starve other queues on the port.

NOTE: On a QFabric system, if a fabric (fte) interface handles strict-high priority traffic, you must define a separate forwarding class set (priority group) for strict-high priority traffic. Strict-high priority traffic cannot be mixed with traffic of other priorities in a forwarding class set. For example, you might choose to create different forwarding class sets for best effort, lossless, strict-high priority, and multidestination traffic.

Default Hierarchical Scheduling

NOTE: There is no default hierarchical scheduling on QFX10000 switches. QFX10000 switches use port scheduling by default, and you must explicitly configure hierarchical scheduling to enable ETS.

If you do not explicitly configure hierarchical scheduling, the switch uses the default settings:

- The switch automatically creates a default forwarding class set that contains all of the forwarding classes on the switch. The switch assigns 100 percent of the port output bandwidth to the default forwarding class set. The default forwarding class set is transparent. It does not appear in the configuration and is used for Data Center Bridging Capability Exchange protocol (DCBX) advertisement.

  NOTE: OCX Series switches do not support DCBX, so the ETS configuration is not advertised to connected peers.

- Ingress traffic is classified based on the default classifier settings.

- The forwarding classes (queues) in the default forwarding class set receive bandwidth based on the default scheduler settings.

Release History Table

Release	Description
17.3	Starting with Junos OS 17.3, QFX10000 devices support ETS scheduling.

Related Documentation

- Understanding CoS Packet Flow on page 25
- Understanding CoS Output Queue Schedulers on page 159
- Understanding CoS Priority Group Scheduling on page 184
- *Benefits of Configuring CoS Hierarchical Port Scheduling*
- Understanding CoS Flow Control (Ethernet PAUSE and PFC) on page 414
- Understanding CoS Classifiers on page 60
- Understanding Default CoS Scheduling and Classification on page 79
- Understanding CoS Scheduling on QFabric System Node Device Fabric (fte) Ports on page 149
- Understanding Default CoS Scheduling on QFabric System Interconnect Devices (Junos OS Release 13.1 and Later Releases) on page 265
- Example: Configuring CoS Hierarchical Port Scheduling (ETS) on page 198
- Example: Configuring Queue Schedulers on page 169
- Example: Configuring Traffic Control Profiles (Priority Group Scheduling) on page 188
- Example: Configuring Minimum Guaranteed Output Bandwidth on page 229
- Example: Configuring Maximum Output Bandwidth on page 236

Example: Configuring CoS Hierarchical Port Scheduling (ETS)

Hierarchical port scheduling defines the class-of-service (CoS) properties of output queues, which are mapped to forwarding classes. Traffic is classified into forwarding classes based on code point (priority), so mapping queues to forwarding classes also maps queues to priorities). Hierarchical port scheduling enables you to group priorities that require similar CoS treatment into priority groups. You define the port bandwidth resources for a priority group, and you define the amount of the priority group's resources that each priority in the group can use.

Hierarchical port scheduling is the Junos OS implementation of enhanced transmission selection (ETS), as described in IEEE 802.1Qaz. One major benefit of hierarchical port scheduling is greater port bandwidth utilization. If a priority group on a port does not use all of its allocated bandwidth, other priority groups on that port can use that bandwidth. Also, if a priority within a priority group does not use its allocated bandwidth, other priorities within that priority group can use that bandwidth.

Copyright © 2018, Juniper Networks, Inc.

Configuring hierarchical scheduling is a multistep procedure that includes:

- Mapping forwarding classes to queues
- Defining forwarding class sets (priority groups)
- Defining behavior aggregate classifiers
- Configuring priority-based flow control (PFC) for lossless priorities (queues)
- Applying classifiers and PFC configuration to ingress interfaces
- Defining drop profiles
- Defining schedulers
- Mapping forwarding classes to schedulers
- Defining traffic control profiles
- Assigning priority groups and traffic control profiles to egress ports

NOTE: OCX Series switches do not support lossless transport and do not support PFC. Although this example includes configuring lossless transport with PFC, the portions of the example that do not pertain to lossless transport still apply to OCX Series switches. (You can configure hierarchical scheduling on OCX Series switches, but you cannot configure lossless transport or lossless forwarding classes.)

This example describes how to configure hierarchical scheduling:

- Requirements on page 199
- Overview on page 200
- Configuration on page 204
- Verification on page 215

Requirements

This example uses the following hardware and software components:

- One switch (this example was tested on a Juniper Networks QFX3500 Switch)
- Junos OS Release 11.1 or later for the QFX Series or Junos OS Release 14.1X53-D20 or later for the OCX Series

Overview

Keep the following considerations in mind when you plan the port bandwidth allocation for priority groups and for individual priorities:

- How much traffic and what types of traffic you expect to traverse the system.
- How you want to divide different types of traffic into priorities (forwarding classes) to apply different CoS treatment to different types of traffic. Dividing traffic into priorities includes:
  - Mapping the code points of ingress traffic to forwarding classes using behavior aggregate (BA) classifiers. This classifies incoming traffic into the appropriate forwarding class based on code point.
  - Mapping forwarding classes to output queues. This defines the output queue for each type of traffic.
  - Attaching the BA classifier to the desired ingress interfaces so that incoming traffic maps to the desired forwarding classes and queues.
- How you want to organize priorities into priority groups (forwarding class sets).

  Traffic that requires similar treatment usually belongs in the same priority group. To do this, place forwarding classes that require similar bandwidth, loss, and other characteristics in the same forwarding class set. For example, you can map all types of best-effort traffic forwarding classes into one forwarding class set.
- How much of the port bandwidth you want to allocate to each priority group and to each of the priorities in each priority group. The following considerations apply to bandwidth allocation:
  - Estimate how much traffic you expect in each forwarding class, and how much traffic you expect in each forwarding class set (the amount of traffic you expect in a forwarding class set is the aggregate amount of traffic in the forwarding classes that belong to the forwarding class set).
  - The combined minimum guaranteed bandwidth of the priorities (forwarding classes) in a priority group should not exceed the minimum guaranteed bandwidth of the priority group (forwarding class set). The transmit rate scheduler parameter defines the minimum guaranteed bandwidth for forwarding classes. Scheduler maps associate schedulers with forwarding classes.
  - The combined minimum guaranteed bandwidth of the priority groups (forwarding class sets) on a port should not exceed the port's total bandwidth. The guaranteed rate parameter in the traffic control profile defines the minimum bandwidth for a forwarding class set. Associating a scheduler map with a traffic control profile sets the scheduling for the individual forwarding classes in the forwarding class set.

This example creates hierarchical port scheduling by defining priority groups for best effort, guaranteed delivery, and high-performance computing (HPC) traffic. Each priority group includes priorities that need to receive similar CoS treatment. Each priority group and each priority within each priority group receive the CoS resources needed to service

 Copyright © 2018, Juniper Networks, Inc.

their flows. Lossless priorities use PFC to prevent packet loss when the network experiences congestion.

Topology

Table 64 on page 201 shows the configuration components for this example.

NOTE: OCX Series switches do not support lossless transport and do not support PFC. If you eliminate the configuration elements for the default lossless **fcoe** and **no-loss** forwarding classes (including classifier, forwarding class set, scheduler, and traffic control profile configuration for those forwarding classes) and for PFC, this example works for OCX Series switches. However, because the default **fcoe** and **no-loss** forwarding classes do not carry traffic on OCX Series switches, you can apply the bandwidth allocated to those forwarding classes to other forwarding classes. By default, the active forwarding classes (**best-effort**, **network-control**, and **mcast**) share the unused bandwidth assigned to the **fcoe** and **no-loss** forwarding classes.

Table 64: Components of the Hierarchical Port Scheduling (ETS) Configuration Topology

Property	Settings
Hardware	QFX3500 switch
Mapping of forwarding classes (priorities) to queues	**best-effort** to queue **0** **be2** to queue **1** **fcoe** (Fibre Channel over Ethernet) to queue **3** **no-loss** to queue **4** **hpc** (high-performance computing) to queue **5** **network-control** to queue **7** NOTE: On switches that do not support the ELS CLI, if you are using Junos OS Release 12.2 or later, use the default forwarding-class-to-queue mapping for the lossless **fcoe** and **no-loss** forwarding classes. If you explicitly configure the default lossless forwarding classes, the traffic mapped to those forwarding classes is treated as lossy (**best-effort**) traffic and does *not* receive lossless treatment. On switches that do not support the ELS CLI, in Junos OS Release 12.3 and later, you can include the *no-loss* packet drop attribute in the explicit forwarding class configuration to configure a lossless forwarding class.
Forwarding class sets (priority groups)	**best-effort-pg**: contains forwarding classes **best-effort**, **be2**, and **network control** **guar-delivery-pg**: contains forwarding classes **fcoe** and **no-loss** **hpc-pg**: contains forwarding class **hpc**

Table 64: Components of the Hierarchical Port Scheduling (ETS) Configuration Topology (continued)

Property	Settings
Behavior aggregate classifier (maps forwarding classes and loss priorities to incoming packets by IEEE 802.1 code point)	Name—**hsclassifier1** Code point mapping: • **000** to forwarding class **best-effort** and loss priority **low** • **001** to forwarding class **be2** and loss priority **high** • **011** to forwarding class **fcoe** and loss priority **low** • **100** to forwarding class **no-loss** and loss priority **low** • **101** to forwarding class **hpc** and loss priority **low** • **110** to forwarding class **network-control** and loss priority **low**
PFC	Congestion notification profile name—**gd-cnp** PFC enabled on code points: **011** (**fcoe** priority), **010** (**no-loss** priority)
Drop profiles NOTE: The **fcoe** and **no-loss** priorities (queues) do not use drop profiles because they are lossless traffic classes.	**dp-be-low**: drop start point **25**, drop end point **50**, maximum drop rate **80** **dp-be-high**: drop start point **10**, drop end point **40**, maximum drop rate **100** **dp-hpc**: drop start point **75**, drop end point **90**, maximum drop rate **75** **dp-nc**: drop start point **80**, drop end point **100**, maximum drop rate **100**
Queue schedulers	**be-sched**: minimum bandwidth **3g**, maximum bandwidth **100%**, priority **low**, drop profiles **dp-be-low** and **dp-be-high** **fcoe-sched**: minimum bandwidth **2.5g**, maximum bandwidth **100%**, priority **low** **hpc-sched**: minimum bandwidth **2g**, maximum bandwidth **100%**, priority **low**, drop profile **dp-hpc** **nc-sched**: minimum bandwidth **500m**, maximum bandwidth **100%**, priority **low**, drop profile **dp-nc** **nl-sched**: minimum bandwidth **2g**, maximum bandwidth **100%**, priority **low**
Forwarding class-to-scheduler mapping	Scheduler map **be-map**: Forwarding class **best-effort**, scheduler **be-sched** Forwarding class **be2**, scheduler **be-sched** Forwarding class **network-control**, scheduler **nc-sched** Scheduler map **gd-map**: Forwarding class **fcoe**, scheduler **fcoe-sched** Forwarding class **no-loss**, scheduler **nl-sched** Scheduler map **hpc-map**: Forwarding class **hpc**, scheduler **hpc-sched**
Traffic control profiles	**be-tcp**: scheduler map **be-map**, minimum bandwidth **3.5g**, maximum bandwidth **100%** **gd-tcp**: scheduler map **gd-map**, minimum bandwidth **4.5g**, maximum bandwidth **100%** **hpc-tcp**: scheduler map **hpc-map**, minimum bandwidth **2g**, maximum bandwidth **100%**

Copyright © 2018, Juniper Networks, Inc.

Table 64: Components of the Hierarchical Port Scheduling (ETS) Configuration Topology (continued)

Property	Settings
Interfaces	This example configures hierarchical port scheduling on interfaces **xe-0/0/20** and **xe-0/0/21**. Because traffic is bidirectional, you apply the ingress and egress configuration components to both interfaces: • Classifier Name—**hsclassifier1** • Forwarding class sets—**best-effort-pg**, **guar-deliver-pg**, **hpc-pg** • Congestion notification profile—**gd-cnp**

Figure 7 on page 203 shows a block diagram of the configuration components and the configuration flow of the CLI statements used in the example. You can perform the configuration steps in a different sequence if you want.

Figure 7: Hierarchical Port Scheduling Components Block Diagram

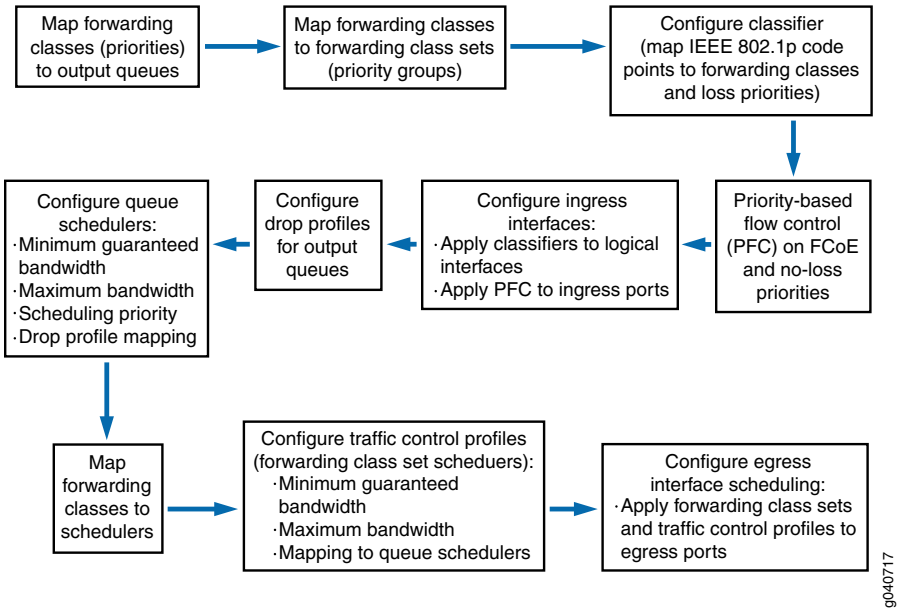

Figure 8 on page 204 shows a block diagram of the hierarchical scheduling packet flow from ingress to egress.

Figure 8: Hierarchical Port Scheduling Packet Flow Block Diagram

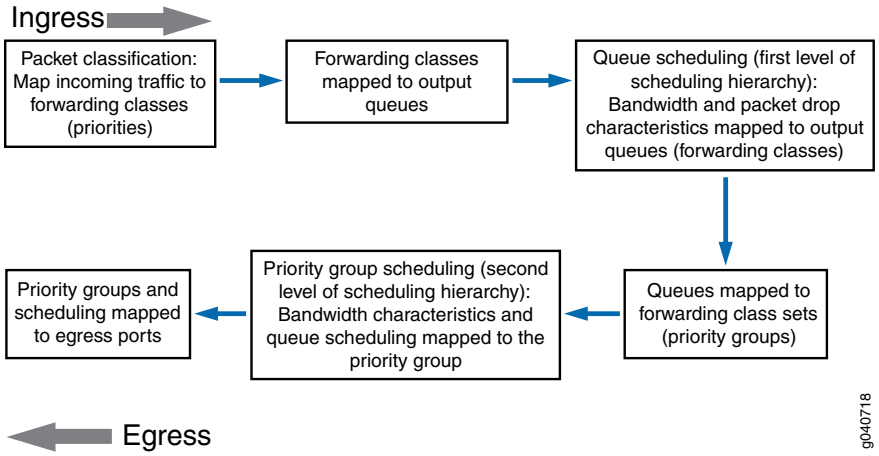

Configuration

CLI Quick Configuration

To quickly configure hierarchical port scheduling on systems that support lossless transport, copy the following commands, paste them in a text file, remove line breaks, change variables and details to match your network configuration, and then copy and paste the commands into the CLI at the [edit class-of-service] hierarchy level:

```
[edit class-of-service]
set forwarding-classes class best-effort queue-num 0
set forwarding-classes class be2 queue-num 1
set forwarding-classes class hpc queue-num 5
set forwarding-classes class network-control queue-num 7
set forwarding-class-sets best-effort-pg class best-effort
set forwarding-class-sets best-effort-pg class be2
set forwarding-class-sets best-effort-pg class network-control
set forwarding-class-sets guar-delivery-pg class fcoe
set forwarding-class-sets guar-delivery-pg class no-loss
set forwarding-class-sets hpc-pg class hpc
set classifiers ieee-802.1 hsclassifier1 forwarding-class best-effort loss-priority low code-points
000
set classifiers ieee-802.1 hsclassifier1 forwarding-class be2 loss-priority high code-points 001
set classifiers ieee-802.1 hsclassifier1 forwarding-class fcoe loss-priority low code-points 011
set classifiers ieee-802.1 hsclassifier1 forwarding-class no-loss loss-priority low code-points 100
set classifiers ieee-802.1 hsclassifier1 forwarding-class hpc loss-priority low code-points 101
set classifiers ieee-802.1 hsclassifier1 forwarding-class network-control loss-priority low
code-points 110
set congestion-notification-profile gd-cnp input ieee-802.1 code-point 011 pfc
set congestion-notification-profile gd-cnp input ieee-802.1 code-point 100 pfc
set interfaces xe-0/0/20 unit 0 classifiers ieee-802.1 hsclassifier1
set interfaces xe-0/0/21 unit 0 classifiers ieee-802.1 hsclassifier1
set interfaces xe-0/0/20 congestion-notification-profile gd-cnp
set interfaces xe-0/0/21 congestion-notification-profile gd-cnp
set drop-profiles dp-be-low interpolate fill-level 25 fill-level 50 drop-probability 0 drop-probability
80
set drop-profiles dp-be-high interpolate fill-level 10 fill-level 40 drop-probability 0 drop-probability
100
set drop-profiles dp-nc interpolate fill-level 80 fill-level 100 drop-probability 0 drop-probability
100
```


Copyright © 2018, Juniper Networks, Inc.

```
set drop-profiles dp-hpc interpolate fill-level 75 fill-level 90 drop-probability 0 drop-probability
75
set schedulers be-sched priority low transmit-rate 3g
set schedulers be-sched shaping-rate percent 100
set schedulers be-sched drop-profile-map loss-priority low protocol any drop-profile dp-be-low
set schedulers be-sched drop-profile-map loss-priority high protocol any drop-profile dp-be-high
set schedulers fcoe-sched priority low transmit-rate 2500m
set schedulers fcoe-sched shaping-rate percent 100
set schedulers hpc-sched priority low transmit-rate 2g
set schedulers hpc-sched shaping-rate percent 100
set schedulers hpc-sched drop-profile-map loss-priority low protocol any drop-profile dp-hpc
set schedulers nc-sched priority low transmit-rate 500m
set schedulers nc-sched shaping-rate percent 100
set schedulers nc-sched drop-profile-map loss-priority low protocol any drop-profile dp-nc
set schedulers nl-sched priority low transmit-rate 2g
set schedulers nl-sched shaping-rate percent 100
set scheduler-maps be-map forwarding-class best-effort scheduler be-sched
set scheduler-maps be-map forwarding-class be2 scheduler be-sched
set scheduler-maps be-map forwarding-class network-control scheduler nc-sched
set scheduler-maps gd-map forwarding-class fcoe scheduler fcoe-sched
set scheduler-maps gd-map forwarding-class no-loss scheduler nl-sched
set scheduler-maps hpc-map forwarding-class hpc scheduler hpc-sched
set traffic-control-profiles be-tcp scheduler-map be-map guaranteed-rate 3500m
set traffic-control-profiles be-tcp shaping-rate percent 100
set traffic-control-profiles gd-tcp scheduler-map gd-map guaranteed-rate 4500m
set traffic-control-profiles gd-tcp shaping-rate percent 100
set traffic-control-profiles hpc-tcp scheduler-map hpc-map guaranteed-rate 2g
set traffic-control-profiles hpc-tcp shaping-rate percent 100
set interfaces xe-0/0/20 forwarding-class-set best-effort-pg output-traffic-control-profile be-tcp
set interfaces xe-0/0/20 forwarding-class-set guar-delivery-pg output-traffic-control-profile
gd-tcp
set interfaces xe-0/0/20 forwarding-class-set hpc-pg output-traffic-control-profile hpc-tcp
set interfaces xe-0/0/21 forwarding-class-set best-effort-pg output-traffic-control-profile be-tcp
set interfaces xe-0/0/21 forwarding-class-set guar-delivery-pg output-traffic-control-profile
gd-tcp
set interfaces xe-0/0/21 forwarding-class-set hpc-pg output-traffic-control-profile hpc-tcp
```

OCX Series Switches

Because OCX Series switches do not support lossless transport, the following subset of the configuration eliminates the lossless configuration elements and provides hierarchical port scheduling for the best-effort, be2, hpc, and network-control forwarding classes. In addition, on OCX Series switches, you would probably use DSCP classifiers and code points instead of IEEE classifiers and code points. To quickly configure hierarchical port scheduling on an OCX Series switch, copy the following commands, paste them in a text file, remove line breaks, change variables and details to match your network configuration, and then copy and paste the commands into the CLI at the [edit class-of-service] hierarchy level:

```
[edit class-of-service]
set forwarding-classes class best-effort queue-num 0
set forwarding-classes class be2 queue-num 1
set forwarding-classes class hpc queue-num 5
set forwarding-classes class network-control queue-num 7
set forwarding-class-sets best-effort-pg class best-effort
set forwarding-class-sets best-effort-pg class be2
set forwarding-class-sets best-effort-pg class network-control
set forwarding-class-sets hpc-pg class hpc
```

```
set classifiers ieee-802.1 hsclassifier1 forwarding-class best-effort loss-priority low code-points
000
set classifiers ieee-802.1 hsclassifier1 forwarding-class be2 loss-priority high code-points 001
set classifiers ieee-802.1 hsclassifier1 forwarding-class hpc loss-priority low code-points 101
set classifiers ieee-802.1 hsclassifier1 forwarding-class network-control loss-priority low
code-points 110
set interfaces xe-0/0/20 unit 0 classifiers ieee-802.1 hsclassifier1
set interfaces xe-0/0/21 unit 0 classifiers ieee-802.1 hsclassifier1
set drop-profiles dp-be-low interpolate fill-level 25 fill-level 50 drop-probability 0 drop-probability
80
set drop-profiles dp-be-high interpolate fill-level 10 fill-level 40 drop-probability 0 drop-probability
100
set drop-profiles dp-nc interpolate fill-level 80 fill-level 100 drop-probability 0 drop-probability
100
set drop-profiles dp-hpc interpolate fill-level 75 fill-level 90 drop-probability 0 drop-probability
75
set schedulers be-sched priority low transmit-rate 3g
set schedulers be-sched shaping-rate percent 100
set schedulers be-sched drop-profile-map loss-priority low protocol any drop-profile dp-be-low
set schedulers be-sched drop-profile-map loss-priority high protocol any drop-profile dp-be-high
set schedulers hpc-sched priority low transmit-rate 2g
set schedulers hpc-sched shaping-rate percent 100
set schedulers hpc-sched drop-profile-map loss-priority low protocol any drop-profile dp-hpc
set schedulers nc-sched priority low transmit-rate 500m
set schedulers nc-sched shaping-rate percent 100
set schedulers nc-sched drop-profile-map loss-priority low protocol any drop-profile dp-nc
set scheduler-maps be-map forwarding-class best-effort scheduler be-sched
set scheduler-maps be-map forwarding-class be2 scheduler be-sched
set scheduler-maps be-map forwarding-class network-control scheduler nc-sched
set scheduler-maps hpc-map forwarding-class hpc scheduler hpc-sched
set traffic-control-profiles be-tcp scheduler-map be-map guaranteed-rate 3500m
set traffic-control-profiles be-tcp shaping-rate percent 100
set traffic-control-profiles hpc-tcp scheduler-map hpc-map guaranteed-rate 2g
set traffic-control-profiles hpc-tcp shaping-rate percent 100
set interfaces xe-0/0/20 forwarding-class-set best-effort-pg output-traffic-control-profile be-tcp
set interfaces xe-0/0/20 forwarding-class-set hpc-pg output-traffic-control-profile hpc-tcp
set interfaces xe-0/0/21 forwarding-class-set best-effort-pg output-traffic-control-profile be-tcp
set interfaces xe-0/0/21 forwarding-class-set hpc-pg output-traffic-control-profile hpc-tcp
```

Step-by-Step Procedure

To perform a step-by-step configuration of the forwarding classes (priorities), forwarding class sets (priority groups), classifiers, queue schedulers, PFC, traffic control profiles, and interfaces to set up hierarchical port scheduling (ETS):

1. Configure the forwarding classes (priorities) and map them to unicast output queues (do not explicitly map the **fcoe** and **no-loss** forwarding classes to output queues; use the default configuration):

   ```
   [edit class-of-service]
   user@switch# set forwarding-classes class best-effort queue-num 0
   user@switch# set forwarding-classes class be2 queue-num 1
   user@switch# set forwarding-classes class hpc queue-num 5
   user@switch# set forwarding-classes class network-control queue-num 7
   ```

2. Configure forwarding class sets (priority groups) to group forwarding classes (priorities) that require similar CoS treatment:

Copyright © 2018, Juniper Networks, Inc.

```
[edit class-of-service]
user@switch# set forwarding-class-sets best-effort-pg class best-effort
user@switch# set forwarding-class-sets best-effort-pg class be2
user@switch# set forwarding-class-sets best-effort-pg class network-control
user@switch# set forwarding-class-sets guar-delivery-pg class fcoe
user@switch# set forwarding-class-sets guar-delivery-pg class no-loss
user@switch# set forwarding-class-sets hpc-pg class hpc
```

NOTE: On OCX Series switches, you would not configure the guar-delivery-pg forwarding class set for lossless traffic.

3. Configure a classifier to set the loss priority and IEEE 802.1 code points assigned to each forwarding class at the ingress:

```
[edit class-of-service]
user@switch# set classifiers ieee-802.1 hsclassifier1 forwarding-class best-effort
loss-priority low code-points 000
user@switch# set classifiers ieee-802.1 hsclassifier1 forwarding-class be2 loss-priority
high code-points 001
user@switch# set classifiers ieee-802.1 hsclassifier1 forwarding-class fcoe loss-priority
low code-points 011
user@switch# set classifiers ieee-802.1 hsclassifier1 forwarding-class no-loss loss-priority
low code-points 100
user@switch# set classifiers ieee-802.1 hsclassifier1 forwarding-class hpc loss-priority low
code-points 101
user@switch# set classifiers ieee-802.1 hsclassifier1 forwarding-class network-control
loss-priority low code-points 110
```

NOTE: On OCX Series switches, you would not configure the fcoe and no-loss portions of the classifier.

4. Configure a congestion notification profile to enable PFC on the FCoE and no-loss queue IEEE 802.1 code points:

```
[edit class-of-service]
user@switch# set congestion-notification-profile gd-cnp input ieee-802.1 code-point 011
pfc
user@switch# set congestion-notification-profile gd-cnp input ieee-802.1 code-point 100
pfc
```

NOTE: This step does not apply to OCX Series switches, which do not support PFC.

5. Assign the classifier to the interfaces:

```
[edit class-of-service]
user@switch# set interfaces xe-0/0/20 unit 0 classifiers ieee-802.1 hsclassifier1
user@switch# set interfaces xe-0/0/21 unit 0 classifiers ieee-802.1 hsclassifier1
```

6. Apply the PFC configuration to the interfaces:

```
[edit class-of-service]
user@switch# set interfaces xe-0/0/20 congestion-notification-profile gd-cnp
user@switch# set interfaces xe-0/0/21 congestion-notification-profile gd-cnp
```

NOTE: This step does not apply to OCX Series switches, which do not support PFC.

7. Configure the drop profile for the best-effort low loss-priority queue:

```
[edit class-of-service]
user@switch# set drop-profiles dp-be-low interpolate fill-level 25 fill-level 50
drop-probability 0 drop-probability 80
```

8. Configure the drop profile for the best-effort high loss-priority queue:

```
[edit class-of-service]
user@switch# set drop-profiles dp-be-high interpolate fill-level 10 fill-level 40
drop-probability 0 drop-probability 100
```

9. Configure the drop profile for the network-control queue:

```
[edit class-of-service]
user@switch# set drop-profiles dp-nc interpolate fill-level 80 fill-level 100 drop-probability
0 drop-probability 100
```

10. Configure the drop profile for the high-performance computing queue:

```
[edit class-of-service]
user@switch# set drop-profiles dp-hpc interpolate fill-level 75 fill-level 90 drop-probability
0 drop-probability 75
```

11. Define the minimum guaranteed bandwidth, priority, maximum bandwidth, and drop profiles for the best-effort queue:

```
[edit class-of-service]
user@switch# set schedulers be-sched priority low transmit-rate 3g
user@switch# set schedulers be-sched shaping-rate percent 100
user@switch# set schedulers be-sched drop-profile-map loss-priority low protocol any
drop-profile dp-be-low
user@switch# set schedulers be-sched drop-profile-map loss-priority high protocol any
drop-profile dp-be-high
```


Copyright © 2018, Juniper Networks, Inc.

12. Define the minimum guaranteed bandwidth, priority, and maximum bandwidth for the FCoE queue:

```
[edit class-of-service]
user@switch# set schedulers fcoe-sched priority low transmit-rate 2500m
user@switch# set schedulers fcoe-sched shaping-rate percent 100
```

NOTE: This step does not apply to OCX Series switches, which do not support lossless transport.

13. Define the minimum guaranteed bandwidth, priority, maximum bandwidth, and drop profile for the high-performance computing queue:

```
[edit class-of-service]
user@switch# set schedulers hpc-sched priority low transmit-rate 2g
user@switch# set schedulers hpc-sched shaping-rate percent 100
user@switch# set schedulers hpc-sched drop-profile-map loss-priority low protocol any
drop-profile dp-hpc
```

14. Define the minimum guaranteed bandwidth, priority, maximum bandwidth, and drop profile for the network-control queue:

```
[edit class-of-service]
user@switch# set schedulers nc-sched priority low transmit-rate 500m
user@switch# set schedulers nc-sched shaping-rate percent 100
user@switch# set schedulers nc-sched drop-profile-map loss-priority low protocol any
drop-profile dp-nc
```

15. Define the minimum guaranteed bandwidth, priority, and maximum bandwidth for the no-loss queue:

```
[edit class-of-service]
user@switch# set schedulers nl-sched priority low transmit-rate 2g
user@switch# set schedulers nl-sched shaping-rate percent 100
```

NOTE: This step does not apply to OCX Series switches, which do not support lossless transport.

16. Map the schedulers to the appropriate forwarding classes (queues):

```
[edit class-of-service]
user@switch# set scheduler-maps be-map forwarding-class best-effort scheduler be-sched
user@switch# set scheduler-maps be-map forwarding-class be2 scheduler be-sched
user@switch# set scheduler-maps be-map forwarding-class network-control scheduler
nc-sched
user@switch# set scheduler-maps gd-map forwarding-class fcoe scheduler fcoe-sched
```

```
user@switch# set scheduler-maps gd-map forwarding-class no-loss scheduler nl-sched
user@switch# set scheduler-maps hpc-map forwarding-class hpc scheduler hpc-sched
```

NOTE: On OCX Series switches, because lossless transport is not supported, you would not configure the gd-map scheduler map.

17. Define the traffic control profile for the best-effort priority group (queue scheduler to mapping, minimum guaranteed bandwidth, and maximum bandwidth):

```
[edit class-of-service]
user@switch# set traffic-control-profiles be-tcp scheduler-map be-map guaranteed-rate
3500m
user@switch# set traffic-control-profiles be-tcp shaping-rate percent 100
```

18. Define the traffic control profile for the guaranteed delivery priority group (queue to scheduler mapping, minimum guaranteed bandwidth, and maximum bandwidth):

```
[edit class-of-service]
user@switch# set traffic-control-profiles gd-tcp scheduler-map gd-map guaranteed-rate
4500m
user@switch# set traffic-control-profiles gd-tcp shaping-rate percent 100
```

NOTE: This step does not apply to OCX Series switches, which do not support lossless transport.

19. Define the traffic control profile for the high-performance computing priority group (queue to scheduler mapping, minimum guaranteed bandwidth, and maximum bandwidth):

```
[edit class-of-service]
user@switch# set traffic-control-profiles hpc-tcp scheduler-map hpc-map guaranteed-rate
2g
user@switch# set traffic-control-profiles hpc-tcp shaping-rate percent 100
```

20. Apply the three priority groups (forwarding class sets) and the appropriate traffic control profiles to the egress ports:

```
[edit class-of-service]
user@switch# set interfaces xe-0/0/20 forwarding-class-set best-effort-pg
output-traffic-control-profile be-tcp
user@switch# set interfaces xe-0/0/20 forwarding-class-set guar-delivery-pg
output-traffic-control-profile gd-tcp
user@switch# set interfaces xe-0/0/20 forwarding-class-set hpc-pg
output-traffic-control-profile hpc-tcp
user@switch# set interfaces xe-0/0/21 forwarding-class-set best-effort-pg
output-traffic-control-profile be-tcp
```


Copyright © 2018, Juniper Networks, Inc.

```
user@switch# set interfaces xe-0/0/21 forwarding-class-set guar-delivery-pg
output-traffic-control-profile gd-tcp
user@switch# set interfaces xe-0/0/21 forwarding-class-set hpc-pg
output-traffic-control-profile hpc-tcp
```

NOTE: Because OCX Series switches do not support lossless transport, on OCX Series switches, you would not apply the **guar-deliver-pg** forwarding class set and the **gd-tcp** traffic control profile to interfaces.

Results

Display the results of the configuration (the system shows only the explicitly configured parameters; it does not show default parameters such as the **fcoe** and **no-loss** lossless forwarding classes). On OCX Series switches, you would not see the lossless configuration components in the output:

```
user@switch> show configuration class-of-service
classifiers {
  ieee-802.1 hsclassifier1 {
    forwarding-class best-effort {
      loss-priority low code-points 000;
    }
    forwarding-class be2 {
      loss-priority high code-points 001;
    }
    forwarding-class fcoe {
      loss-priority low code-points 011;
    }
    forwarding-class no-loss {
      loss-priority low code-points 100;
    }
    forwarding-class hpc {
      loss-priority low code-points 101;
    }
    forwarding-class network-control {
      loss-priority low code-points 110;
    }
  }
  drop-profiles {
    dp-be-low {
      interpolate {
        fill-level [ 25 50 ];
        drop-probability [ 0 80 ];
      }
    }
    dp-be-high {
      interpolate {
        fill-level [ 10 40 ];
        drop-probability [ 0 100 ];
```

```
        }
    }
    dp-hpc {
        interpolate {
            fill-level [ 75 90 ];
            drop-probability [ 0 75 ];
        }
    }
    dp-nc {
        interpolate {
            fill-level [ 80 100 ];
            drop-probability [ 0 100 ];
        }
    }
}
forwarding-classes {
    class best-effort queue-num 0;
    class be2 queue-num 1;
    class hpc queue-num 5;
    class network-control queue-num 7;
}
traffic-control-profiles {
    be-tcp {
        scheduler-map be-map;
        shaping-rate percent 100;
        guaranteed-rate 3500000000;
    }
    gd-tcp {
        scheduler-map gd-map;
        shaping-rate percent 100;
        guaranteed-rate 4500000000;
    }
    hpc-tcp {
        scheduler-map hpc-map;
        shaping-rate percent 100;
        guaranteed-rate 2g;
    }
}
forwarding-class-sets {
    guar-delivery-pg {
        class fcoe;
        class no-loss;
    }
    best-effort-pg {
        class best-effort;
        class be2;
        class network-control;
    }
    hpc-pg {
        class hpc;
    }
}
congestion-notification-profile {
    gd-cnp {
        input {
```


Copyright © 2018, Juniper Networks, Inc.

```
            ieee-802.1 {
                code-point 011 {
                    pfc;
                }
                code-point 100 {
                    pfc;
                }
            }
        }
    }
}
interfaces {
    xe-0/0/20 {
        forwarding-class-set {
            best-effort-pg {
                output-traffic-control-profile be-tcp;
            }
            guar-delivery-pg {
                output-traffic-control-profile gd-tcp;
            }
            hpc-pg {
                output-traffic-control-profile hpc-tcp;
            }
        }
        congestion-notification-profile gd-cnp;
        unit 0 {
            classifiers {
                ieee-802.1 hsclassifier1;
            }
        }
    }
    xe-0/0/21 {
        forwarding-class-set {
            best-effort-pg {
                output-traffic-control-profile be-tcp;
            }
            guar-delivery-pg {
                output-traffic-control-profile gd-tcp;
            }
            hpc-pg {
                output-traffic-control-profile hpc-tcp;
            }
        }
        congestion-notification-profile gd-cnp;
        unit 0 {
            classifiers {
                ieee-802.1 hsclassifier1;
            }
        }
    }
}
scheduler-maps {
    be-map {
        forwarding-class best-effort scheduler be-sched;
        forwarding-class network-control scheduler nc-sched;
```

```
        forwarding-class be2 scheduler be-sched;
    }
    gd-map {
        forwarding-class fcoe scheduler fcoe-sched;
        forwarding-class no-loss scheduler nl-sched;
    }
    hpc-map {
        forwarding-class hpc scheduler hpc-sched;
    }
}
schedulers {
    be-sched {
        transmit-rate 3g;
        shaping-rate percent 100;
        priority low;
        drop-profile-map loss-priority low protocol any drop-profile dp-be-low;
        drop-profile-map loss-priority high protocol any drop-profile dp-be-high;
    }
    fcoe-sched {
        transmit-rate 2500000000;
        shaping-rate percent 100;
        priority low;
    }
    hpc-sched {
        transmit-rate 2g;
        shaping-rate percent 100;
        priority low;
        drop-profile-map loss-priority low protocol any drop-profile dp-hpc;
    }
    nc-sched {
        transmit-rate 500m;
        shaping-rate percent 100;
        priority low;
        drop-profile-map loss-priority low protocol any drop-profile dp-nc;
    }
    nl-sched {
        transmit-rate 2g;
        shaping-rate percent 100;
        priority low;
    }
}
```

TIP: To quickly configure the interfaces, issue the **load merge terminal** command, and then copy the hierarchy and paste it into the switch terminal window.

Copyright © 2018, Juniper Networks, Inc.

Verification

NOTE: The verification output is based on the full example configuration. On OCX Series switches, you do not see lossless configuration components in the output. Comments about lossless configuration components do not apply to OCX Series switches.

To verify that you created the hierarchical port scheduling components and they are operating properly, perform these tasks:

- Verifying the Forwarding Classes (Priorities) on page 215
- Verifying the Forwarding Class Sets (Priority Groups) on page 216
- Verifying the Classifier on page 217
- Verifying Priority-Based Flow Control on page 217
- Verifying the Output Queue Schedulers on page 218
- Verifying the Drop Profiles on page 221
- Verifying the Priority Group Output Schedulers (Traffic Control Profiles) on page 222
- Verifying the Interface Configuration on page 223

Verifying the Forwarding Classes (Priorities)

Purpose Verify that you created the forwarding classes and mapped them to the correct queues. (The system shows only the explicitly configured forwarding classes. It does not show default forwarding classes such as **fcoe** and **no-loss**.)

Action List the forwarding classes using the operational mode command **show class-of-service forwarding-class**:

```
user@switch> show class-of-service forwarding-class
Forwarding class                      ID      Queue  Policing priority  No-Loss

  best-effort                         0         0         normal        Disabled

  be2                                 1         3         normal        Disabled

  hpc                                 2         4         normal        Disabled

  network-control                     3         7         normal        Disabled

  mcast                               8         8         normal        Disabled
```

Meaning The **show class-of-service forwarding-class** command lists all of the configured forwarding classes, the internal identification number of each forwarding class, the queues that are mapped to the forwarding classes, the policing priority, and whether the forwarding class

is lossless (no-loss packet drop attribute enabled) or lossy forwarding class (no-loss packet drop attribute disabled). The command output shows that:

- Forwarding class **best-effort** maps to queue **0** and is lossy
- Forwarding class **be2** maps to queue **1** and is lossy
- Forwarding class **hpc** maps to queue **5** and is lossy
- Forwarding class **network-control** maps to queue **7** and is lossy

In addition, the command lists the default multicast (multidestination) forwarding class and the default queue to which it is mapped.

Verifying the Forwarding Class Sets (Priority Groups)

Purpose Verify that you created the priority groups and that the correct priorities (forwarding classes) belong to the appropriate priority group.

Action List the forwarding class sets using the operational mode command **show class-of-service forwarding-class-set**:

```
user@switch> show class-of-service forwarding-class-set
Forwarding class set: best-effort-pg, Type: normal-type, Forwarding class set
index: 19907
  Forwarding class                        Index
  best-effort                               0
  be2                                       1
  network-control                           5

Forwarding class set: guar-delivery-pg, Type: normal-type, Forwarding class set
index: 43700
  Forwarding class                        Index
  fcoe                                      2
  no-loss                                   3

Forwarding class set: hpc-pg, Type: normal-type, Forwarding class set index: 60758

  Forwarding class                        Index
  hpc                                       4
```

Meaning The **show class-of-service forwarding-class-set** command lists all of the configured forwarding class sets (priority groups), the forwarding classes (priorities) that belong to each priority group, and the internal index number of each priority group. The command output shows that:

- The forwarding class set **best-effort-pg** includes the forwarding classes **best-effort**, **be2**, and **network-control**.
- The forwarding class set **guar-delivery-pg** includes the forwarding classes **fcoe** and **no-loss**.
- The forwarding class set **hpc-pg** includes the forwarding class **hpc**.

 Copyright © 2018, Juniper Networks, Inc.

Verifying the Classifier

Purpose Verify that the classifier maps forwarding classes to the correct IEEE 802.1p code points and packet loss priorities.

Action List the classifier configured for hierarchical port scheduling using the operational mode command **show class-of-service classifier name hsclassifier1**:

```
user@switch> show class-of-service classifier name hsclassifier1
Classifier: hsclassifier1, Code point type: ieee-802.1, Index: 43607
  Code point         Forwarding class                    Loss priority
  000                best-effort                         low
  001                be2                                 high
  011                fcoe                                low
  100                no-loss                             low
  101                hpc                                 low
  110                network-control                     low
```

Meaning The **show class-of-service classifier name hsclassifier1** command lists all of the IEEE 802.1p code points and the loss priorities mapped to all of the forwarding classes in the classifier. The command output shows that the forwarding classes **best-effort**, **be2**, **no-loss**, **fcoe**, **hpc**, and **network-control** have been created and mapped to IEEE 802.1p code points and loss priorities.

Verifying Priority-Based Flow Control

Purpose Verify that PFC is enabled on the correct priorities for lossless transport.

Action List the congestion notification profiles using the operational mode command **show class-of-service congestion-notification**:

```
user@switch> show class-of-service congestion-notification
Type: Input, Name: gd-cnp, Index: 51687
Cable Length: 100 m
  Priority     PFC          MRU
  000          Disabled
  001          Disabled
  010          Disabled
  011          Enabled      2500
  100          Enabled      2500
  101          Disabled
  110          Disabled
  111          Disabled
Type: Output
  Priority     Flow-Control-Queues
  000
               0
  001
               1
```

```
010
            2
011
            3
100
            4
101
            5
110
            6
111
            7
```

Meaning The **show class-of-service congestion-notification** command lists all of the congestion notification profiles and the IEEE 802.1p code points with PFC enabled. The command output shows that PFC is enabled for code points **011** (**fcoe** priority and queue) and **100** (**no-loss** priority and queue) for the **gd-cnp** congestion notification profile.

The command also shows the default cable length (100 meters), the default maximum receive unit (2500 bytes), and the default mapping of priorities to output queues because this example does not include configuring these options.

Verifying the Output Queue Schedulers

Purpose Verify that you created the output queue schedulers with the correct bandwidth parameters and priorities, mapped to the correct queues, and mapped to the correct drop profiles.

Action List the scheduler maps using the operational mode command **show class-of-service scheduler-map**:

```
user@switch> show class-of-service scheduler-map
Scheduler map: be-map, Index: 64023

  Scheduler: be-sched, Forwarding class: best-effort, Index: 13005
    Transmit rate: 3000000000 bps, Rate Limit: none, Buffer size: remainder,
    Buffer Limit: none, Priority: low
    Excess Priority: unspecified
    Shaping rate: 100 percent,
    drop-profile-map-set-type: mark
    Drop profiles:
      Loss priority   Protocol    Index    Name
      Low             any         55387    dp-be-low
      Medium high     any             1    <default-drop-profile>
      High            any          4369    dp-be-high

  Scheduler: be-sched, Forwarding class: be2, Index: 13005
    Transmit rate: 3000000000 bps, Rate Limit: none, Buffer size: remainder,
    Buffer Limit: none, Priority: low
    Excess Priority: unspecified
    Shaping rate: 100 percent,
    drop-profile-map-set-type: mark
```

 Copyright © 2018, Juniper Networks, Inc.

```
    Drop profiles:
      Loss priority   Protocol    Index    Name
      Low             any         55387    dp-be-low
      Medium high     any             1    <default-drop-profile>
      High            any          4369    dp-be-high

  Scheduler: nc-sched, Forwarding class: network-control, Index: 45740
    Transmit rate: 500000000 bps, Rate Limit: none, Buffer size: remainder,
    Buffer Limit: none, Priority: low
    Excess Priority: unspecified
    Shaping rate: 100 percent,
    drop-profile-map-set-type: mark
    Drop profiles:
      Loss priority   Protocol    Index    Name
      Low             any         44207    dp-nc
      Medium high     any             1    <default-drop-profile>
      High            any             1    <default-drop-profile>

Scheduler map: gd-map, Index: 61447

  Scheduler: fcoe-sched, Forwarding class: fcoe, Index: 37289
    Transmit rate: 2500000000 bps, Rate Limit: none, Buffer size: remainder,
    Buffer Limit: none, Priority: low
    Excess Priority: unspecified
    Shaping rate: 100 percent,
    drop-profile-map-set-type: mark
    Drop profiles:
      Loss priority   Protocol    Index    Name
      Low             any         44207    <default-drop-profile>
      Medium high     any             1    <default-drop-profile>
      High            any             1    <default-drop-profile>

  Scheduler: nl-sched, Forwarding class: no-loss, Index: 29359
    Transmit rate: 2000000000 bps, Rate Limit: none, Buffer size: remainder,
    Buffer Limit: none, Priority: low
    Excess Priority: unspecified
    Shaping rate: 100 percent,
    drop-profile-map-set-type: mark
    Drop profiles:
      Loss priority   Protocol    Index    Name
      Low             any         44207    <default-drop-profile>
      Medium high     any             1    <default-drop-profile>
      High            any             1    <default-drop-profile>

Scheduler map: hpc-map, Index: 56941

  Scheduler: hpc-sched, Forwarding class: hpc, Index: 55900
    Transmit rate: 2000000000 bps, Rate Limit: none, Buffer size: remainder,
    Buffer Limit: none, Priority: low
    Excess Priority: unspecified
    Shaping rate: 100 percent,
    drop-profile-map-set-type: mark
    Drop profiles:
      Loss priority   Protocol    Index    Name
      Low             any         57716    dp-hpc
      Medium high     any             1    <default-drop-profile>
      High            any             1    <default-drop-profile>
```

Meaning The **show class-of-service scheduler-map** command lists all of the configured scheduler maps. For each scheduler map, the command output includes:

- The name of the scheduler map (**scheduler-map** field)
- The name of the scheduler (**scheduler** field)
- The forwarding classes mapped to the scheduler (**forwarding-class** field)
- The minimum guaranteed queue bandwidth (**transmit-rate** field)
- The scheduling priority (**priority** field)
- The maximum bandwidth in the priority group the queue can consume (**shaping-rate** field)
- The drop profile loss priority (**loss priority** field) for each drop profile name (**name** field)

The command output shows that:

- The scheduler map **be-map** was created and has these properties:
  - There are two schedulers, **be-sched** and **nc-sched**.
  - The scheduler **be-sched** has two forwarding classes, **best-effort** and **be2**.
  - Scheduler **be-sched** forwarding classes **best-effort** and **be2** share a minimum guaranteed bandwidth of **3,000,000,000 bps**, can consume a maximum of **100 percent** of the priority group bandwidth, and use the drop profile **dp-be-low** for low loss-priority traffic, the default drop profile for medium-high loss-priority traffic, and the drop profile **dp-be-high** for high loss-priority traffic.
  - The scheduler **nc-sched** has one forwarding class, **network-control**.
  - The **network-control** forwarding class has a minimum guaranteed bandwidth of **500,000,000 bps**, can consume a maximum of **100 percent** of the priority group bandwidth, and uses the drop profile **dp-nc** for low loss-priority traffic and the default drop profile for medium-high and high loss priority traffic.
- The scheduler map **gd-map** was created and has these properties:
  - There are two schedulers, **fcoe-sched** and **nl-sched**.
  - The scheduler **fcoe-sched** has one forwarding class, **fcoe**.
  - The **fcoe** forwarding class has a minimum guaranteed bandwidth of **2,500,000,000 bps**, and can consume a maximum of **100 percent** of the priority group bandwidth.
  - The scheduler **nl-sched** has one forwarding class, **no-loss**.
  - The **no-loss** forwarding class has a minimum guaranteed bandwidth of **2,000,000,000 bps**, and can consume a maximum of **100 percent** of the priority group bandwidth.
- The scheduler map **hpc-map** was created and has these properties:
  - There is one scheduler, **hpc-sched**.
  - The scheduler **hpc-sched** has one forwarding class, **hpc**.

 Copyright © 2018, Juniper Networks, Inc.

- The **hpc** forwarding class has a minimum guaranteed bandwidth of **2,000,000,000 bps**, can consume a maximum of **100 percent** of the priority group bandwidth, and uses the drop profile **dp-hpc** for low loss-priority traffic and the default drop profile for medium-high and high loss-priority traffic.

Verifying the Drop Profiles

Purpose Verify that you created the drop profiles **dp-be-high**, **dp-be-low**, **dp-hpc**, and **dp-nc** with the correct fill levels and drop probabilities.

Action List the drop profiles using the operational mode command **show configuration class-of-service drop-profiles**:

```
user@switch> show configuration class-of-service drop-profiles
dp-be-low {
    interpolate {
        fill-level [ 25 50 ];
        drop-probability [ 0 80 ];
    }
}
dp-be-high {
    interpolate {
        fill-level [ 10 40 ];
        drop-probability [ 0 100 ];
    }
}
dp-hpc {
    interpolate {
        fill-level [ 75 90 ];
        drop-probability [ 0 75 ];
    }
}
dp-nc {
    interpolate {
        fill-level [ 80 100 ];
        drop-probability [ 0 100 ];
    }
```

Meaning The **show configuration class-of-service drop-profiles** command lists the drop profiles and their properties. The command output shows that there are four drop profiles configured, **dp-be-high**, **dp-be-low**, **dp-hpc**, and **dp-nc**. The output also shows that:

- For **dp-be-low**, the drop start point (the first fill level) is when the queue is 25 percent filled, the drop end point (the second fill level) occurs when the queue is 50 percent filled, and the drop probability at the drop end point is 80 percent.
- For **dp-be-high**, the drop start point (the first fill level) is when the queue is 10 percent filled, the drop end point (the second fill level) occurs when the queue is 40 percent filled, and the drop probability at the drop end point is 100 percent.

- For **dp-hpc**, the drop start point (the first fill level) is when the queue is 75 percent filled, the drop end point (the second fill level) occurs when the queue is 90 percent filled, and the drop probability at the drop end point is 75 percent.
- For **dp-nc**, the drop start point (the first fill level) is when the queue is 80 percent filled, the drop end point (the second fill level) occurs when the queue is 100 percent filled, and the drop probability at the drop end point is 100 percent.

Verifying the Priority Group Output Schedulers (Traffic Control Profiles)

Purpose Verify that you created the traffic control profiles **be-tcp**, **gd-tcp**, and **hpc-tcp** with the correct bandwidth parameters and scheduler mapping.

Action List the traffic control profiles using the operational mode command **show class-of-service traffic-control-profile**:

```
user@switch> show class-of-service traffic-control-profile
Traffic control profile: be-tcp, Index: 40535
  Shaping rate: 100 percent
  Scheduler map: be-map
  Guaranteed rate: 3500000000

Traffic control profile: gd-tcp, Index: 37959
  Shaping rate: 100 percent
  Scheduler map: gd-map
  Guaranteed rate: 4500000000

Traffic control profile: hpc-tcp, Index: 47661
  Shaping rate: 100 percent
  Scheduler map: hpc-map
  Guaranteed rate: 2000000000
```

Meaning The **show class-of-service traffic-control-profile** command lists all of the configured traffic control profiles. For each traffic control profile, the command output includes:

- The name of the traffic control profile (**traffic-control-profile**)
- The maximum port bandwidth the priority group can consume (**shaping-rate**)
- The scheduler map associated with the traffic control profile (**scheduler-map**)
- The minimum guaranteed priority group port bandwidth (**guaranteed-rate**)

The command output shows that:

- The traffic control profile **be-tcp** can consume a maximum of **100 percent** of the port bandwidth, is associated with the scheduler map **be-map**, and has a minimum guaranteed bandwidth of **3,500,000,000 bps**.
- The traffic control profile **gd-tcp** can consume a maximum of **100 percent** of the port bandwidth, is associated with the scheduler map **gd-map**, and has a minimum guaranteed bandwidth of **4,500,000,000 bps**.

 Copyright © 2018, Juniper Networks, Inc.

- The traffic control profile **hpc-tcp** can consume a maximum of **100 percent** of the port bandwidth, is associated with the scheduler map **hpc-map**, and has a minimum guaranteed bandwidth of **2,000,000,000 bps**.

Verifying the Interface Configuration

Purpose Verify that the classifier, the congestion notification profile, and the forwarding class sets are configured on interfaces **xe-0/0/20** and **xe-0/0/21**.

Action List the interfaces using the operational mode commands **show configuration class-of-service interfaces xe-0/0/20** and **show configuration class-of-service interfaces xe-0/0/21**:

```
user@switch> show configuration class-of-service interfaces xe-0/0/20
forwarding-class-set {
    best-effort-gp {
        output-traffic-control-profile be-tcp;
    }
    guar-delivery-pg {
        output-traffic-control-profile gd-tcp;
    }
    hpc-pg {
        output-traffic-control-profile hpc-tcp;
    }
}
congestion-notification-profile gd_cnp;
unit 0 {
    classifiers {
        ieee-802.1 hsclassifier1;
    }
}
```

```
user@switch> show configuration class-of-service interfaces xe-0/0/21
forwarding-class-set {
    best-effort-gp {
        output-traffic-control-profile be-tcp;
    }
    guar-delivery-pg {
        output-traffic-control-profile gd-tcp;
    }
    hpc-pg {
        output-traffic-control-profile hpc-tcp;
    }
}
congestion-notification-profile gd_cnp;
unit 0 {
    classifiers {
        ieee-802.1 hsclassifier1;
    }
}
```

Meaning The **show configuration class-of-service interfaces** ***interface-name*** command shows that each interface includes the forwarding class sets **best-effort-pg**, **guar-delivery-pg**, and **hpc-pg**, congestion notification profile **gd-cnp**, and the IEEE 802.1p classifier **hsclassifier1**.

Related Documentation

- Defining CoS BA Classifiers (DSCP, DSCP IPv6, IEEE 802.1p) on page 69
- *Benefits of Configuring CoS Hierarchical Port Scheduling*
- Assigning CoS Components to Interfaces on page 23
- Example: Configuring WRED Drop Profiles on page 252
- Example: Configuring Drop Profile Maps on page 258
- Example: Configuring Forwarding Classes on page 113
- Example: Configuring Forwarding Class Sets on page 120
- Example: Configuring Queue Schedulers on page 169
- Example: Configuring Queue Scheduling Priority on page 178
- Example: Configuring Traffic Control Profiles (Priority Group Scheduling) on page 188
- Example: Configuring Minimum Guaranteed Output Bandwidth on page 229
- Example: Configuring Maximum Output Bandwidth on page 236
- Configuring CoS PFC (Congestion Notification Profiles) on page 429
- Overview of CoS Changes Introduced in Junos OS Release 12.2 on page 54
- Understanding CoS Hierarchical Port Scheduling (ETS) on page 192
- Understanding CoS Scheduling Behavior and Configuration Considerations on page 153
- Understanding CoS Scheduling on QFabric System Node Device Fabric (fte) Ports on page 149
- Understanding Default CoS Scheduling on QFabric System Interconnect Devices (Junos OS Release 13.1 and Later Releases) on page 265

Understanding CoS Priority Group and Queue Guaranteed Minimum Bandwidth

You can set a guaranteed minimum bandwidth for individual forwarding classes (queues) and for groups of forwarding classes called *forwarding class sets* (priority groups). Setting a minimum guaranteed bandwidth ensures that priority groups and queues receive the bandwidth required to support the expected traffic.

This topic covers:

- Guaranteeing Bandwidth Using Hierarchical Scheduling on page 225
- Priority Group Guaranteed Rate (Guaranteed Minimum Bandwidth) on page 226
- Queue Transmit Rate (Guaranteed Minimum Bandwidth) on page 226

 Copyright © 2018, Juniper Networks, Inc.

Guaranteeing Bandwidth Using Hierarchical Scheduling

The **guaranteed-rate** value for the priority group (configured in a traffic control profile) defines the minimum amount of bandwidth allocated to a forwarding class set on a port, whereas the **transmit-rate** value of the queue (configured in a scheduler) defines the minimum amount of bandwidth allocated to a particular queue in a priority group. The queue bandwidth is a portion of the priority group bandwidth.

NOTE: You cannot configure a minimum guaranteed bandwidth (transmit rate) for a forwarding class that is mapped to a strict-high priority queue, and you cannot configure a minimum guaranteed bandwidth (guaranteed rate) for a priority group that includes strict-high priority queues.

Figure 9 on page 225 shows how the total port bandwidth is allocated to priority groups (forwarding class sets) based on the guaranteed rate of each priority group. It also shows how the guaranteed bandwidth of each priority group is allocated to the queues in the priority group based on the transmit rate of each queue.

Figure 9: Allocating Guaranteed Bandwidth Using Hierarchical Scheduling

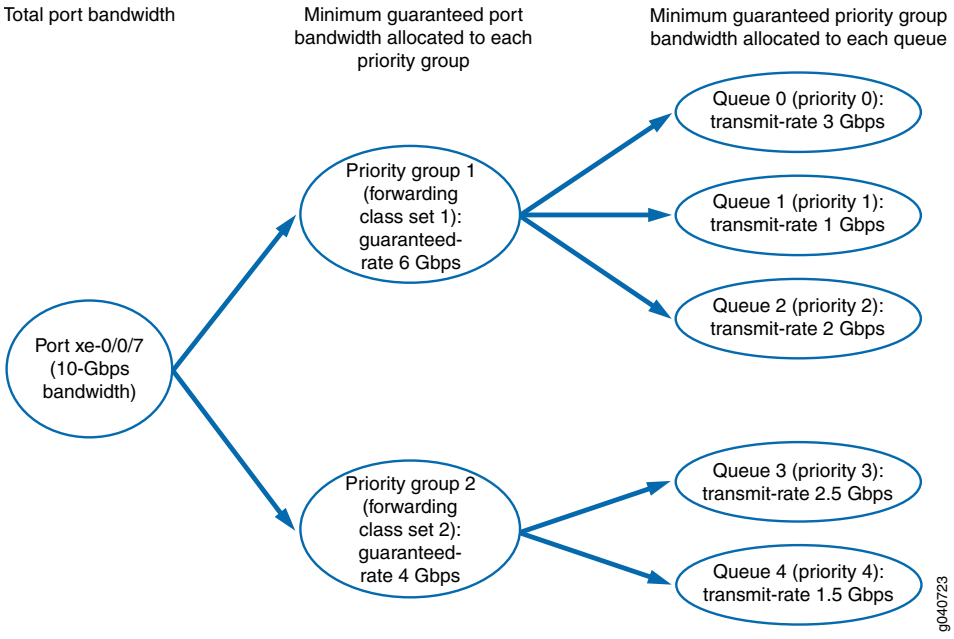

The sum of the priority group guaranteed rates cannot exceed the total port bandwidth. If you configure guaranteed rates whose sum exceeds the port bandwidth, the system sends a syslog message to notify you that the configuration is not valid. However, the system does not perform a commit check. If you commit a configuration in which the sum of the guaranteed rates exceeds the port bandwidth, the hierarchical scheduler behaves unpredictably.

The sum of the queue transmit rates cannot exceed the total guaranteed rate of the priority group to which the queues belong. If you configure transmit rates whose sum

Copyright © 2018, Juniper Networks, Inc.

exceeds the priority group guaranteed rate, the commit check fails and the system rejects the configuration.

NOTE: You must set both the priority group **guaranteed-rate** value and the queue **transmit-rate** value in order to configure the minimum bandwidth for individual queues. If you set the **transmit-rate** value but do not set the **guaranteed-rate** value, the configuration fails.

You can set the **guaranteed-rate** value for a priority group without setting the **transmit-rate** value for individual queues in the priority group. However, queues that do not have a configured **transmit-rate** value can become starved for bandwidth if other higher-priority queues need the priority group's bandwidth. To avoid starving a queue, it is a good practice to configure a **transmit-rate** value for most queues.

If you configure the guaranteed rate of a priority group as a percentage, configure all of the transmit rates associated with that priority group as percentages. In this case, if any of the transmit rates are configured as absolute values instead of percentages, the configuration is not valid and the system sends a syslog message.

Priority Group Guaranteed Rate (Guaranteed Minimum Bandwidth)

Setting a priority group (forwarding class set) **guaranteed-rate** enables you to reserve a portion of the port bandwidth for the forwarding classes (queues) in that forwarding class set. The minimum bandwidth (**guaranteed-rate**) that you configure for a priority group sets the minimum bandwidth available to all of the forwarding classes in the forwarding class set.

The combined **guaranteed-rate** value of all of the forwarding class sets associated with an interface cannot exceed the amount of bandwidth available on that interface.

You configure the priority group **guaranteed-rate** in the traffic control profile. You cannot apply a traffic control profile that has a guaranteed rate to a priority group that includes a strict-high priority queue.

Queue Transmit Rate (Guaranteed Minimum Bandwidth)

Setting a queue (forwarding class) **transmit-rate** enables you to reserve a portion of the priority group bandwidth for the individual queue. For example, a queue that handles Fibre Channel over Ethernet (FCoE) traffic might require a minimum rate of 4 Gbps to ensure the class of service that storage area network (SAN) traffic requires.

The priority group **guaranteed-rate** sets the aggregate minimum amount of bandwidth available to the queues that belong to the priority group. The cumulative total minimum bandwidth the queues consume cannot exceed the minimum bandwidth allocated to the priority group to which they belong. (The combined transmit rates of the queues in a priority group cannot exceed the priority group's guaranteed rate.)

Copyright © 2018, Juniper Networks, Inc.

You must configure the **guaranteed-rate** value of the priority group in order to set a **transmit-rate** value for individual queues that belong to the priority group. The reason is that if there is no guaranteed bandwidth for a priority group, there is no way to guarantee bandwidth for queues in that priority group.

You configure the queue **transmit-rate** in the scheduler configuration. You cannot configure a transmit rate for a strict-high priority queue.

Related Documentation

- Understanding CoS Output Queue Schedulers on page 159
- Understanding CoS Traffic Control Profiles on page 182
- Example: Configuring CoS Hierarchical Port Scheduling (ETS) on page 198
- Example: Configuring Queue Schedulers on page 169
- Example: Configuring Traffic Control Profiles (Priority Group Scheduling) on page 188
- Defining CoS Queue Schedulers on page 166
- Defining CoS Traffic Control Profiles (Priority Group Scheduling) on page 187

Understanding CoS Priority Group Shaping and Queue Shaping (Maximum Bandwidth)

If the amount of traffic on an interface exceeds the maximum bandwidth available on the interface, it leads to congestion. You can use priority group (forwarding class set) shaping and queue (forwarding class) shaping to manage traffic and avoid congestion.

Configuring a maximum bandwidth sets the most bandwidth a priority group or a queue can use after all of the priority group and queue minimum bandwidth requirements are met, even if more bandwidth is available.

This topic covers:

- Priority Group Shaping on page 227
- Queue Shaping on page 228
- Shaping Maximum Bandwidth Using Hierarchical Scheduling on page 228

Priority Group Shaping

Priority group shaping enables you to shape the aggregate traffic of a forwarding class set on a port to a maximum rate that is less than the line or port rate. The maximum bandwidth (**shaping-rate**) that you configure for a priority group sets the maximum bandwidth available to all of the forwarding classes (queues) in the forwarding class set.

If a port has more than one priority group and the combined **shaping-rate** value of the priority groups is greater than the amount of port bandwidth available, the bandwidth is shared proportionally among the priority groups.

You configure the priority group **shaping-rate** in the traffic control profile.

Queue Shaping

Queue shaping throttles the rate at which queues transmit packets. For example, using queue shaping, you can rate-limit a strict-high priority queue so that the strict-priority queue does not lock out (or starve) low-priority queues.

NOTE: **We recommend that you always apply a shaping rate to strict-high priority queues to prevent them from starving other queues. If you do not apply a shaping rate to limit the amount of bandwidth a strict-high priority queue can use, then the strict-high priority queue can use all of the available port bandwidth and starve other queues on the port.**

Similarly, for any queue, you can configure queue shaping (**shaping-rate**) to set the maximum bandwidth for a particular queue.

The **shaping-rate** value of the priority group sets the aggregate maximum amount of bandwidth available to the queues that belong to the priority group. On a port, the cumulative total bandwidth the queues consume cannot exceed the maximum bandwidth of the priority group to which they belong.

If a priority group has more than one queue, and the combined **shaping-rate** of the queues is greater than the amount of bandwidth available to the priority group, the bandwidth is shared proportionally among the queues.

You configure the queue **shaping-rate** in the scheduler configuration, and you set the **shaping-rate** for priority groups in the traffic control profile configuration.

Shaping Maximum Bandwidth Using Hierarchical Scheduling

Priority group shaping defines the maximum bandwidth allocated to a forwarding class set on a port, whereas queue shaping defines a limit on maximum bandwidth usage per queue. The queue bandwidth is a portion of the priority group bandwidth.

Figure 10 on page 229 shows how the port bandwidth is allocated to priority groups (forwarding class sets) based on the shaping rate of each priority group, and how the bandwidth of each priority group is allocated to the queues in the priority group based on the shaping rate of each queue.

Copyright © 2018, Juniper Networks, Inc.

Figure 10: Setting Maximum Bandwidth Using Hierarchical Scheduling

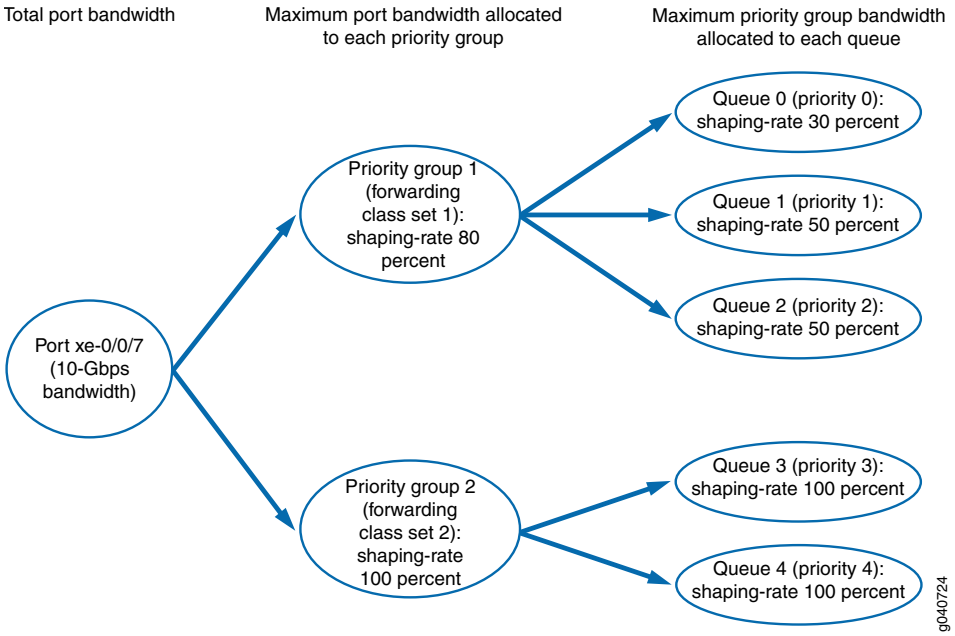

Related Documentation

- Understanding CoS Output Queue Schedulers on page 159
- Understanding CoS Traffic Control Profiles on page 182
- Example: Configuring CoS Hierarchical Port Scheduling (ETS) on page 198
- Example: Configuring Queue Schedulers on page 169
- Example: Configuring Traffic Control Profiles (Priority Group Scheduling) on page 188
- Defining CoS Queue Schedulers on page 166
- Defining CoS Traffic Control Profiles (Priority Group Scheduling) on page 187

Example: Configuring Minimum Guaranteed Output Bandwidth

Scheduling the minimum guaranteed output bandwidth for a queue (forwarding class) requires configuring both tiers of the two-tier hierarchical scheduler. One tier is scheduling the resources for the individual queue. The other tier is scheduling the resources for the priority group (forwarding class set) to which the queue belongs. You set a minimum guaranteed bandwidth to ensure than priority groups and queues receive the bandwidth required to support the expected traffic.

- Requirements on page 230
- Overview on page 230
- Configuring Guaranteed Minimum Bandwidth on page 231
- Verification on page 232

Requirements

This example uses the following hardware and software components:

- A Juniper Networks QFX3500 Switch
- Junos OS Release 11.1 or later for the QFX Series or Junos OS Release 14.1X53-D20 or later for the OCX Series

Overview

The priority group minimum guaranteed bandwidth defines the minimum total amount of bandwidth available for all of the queues in the priority group to meet their minimum bandwidth requirements.

The **transmit-rate** setting in the scheduler configuration determines the minimum guaranteed bandwidth for an individual queue. The transmit rate also determines the amount of excess (extra) priority group bandwidth that the queue can share. Extra priority group bandwidth is allocated among the queues in the priority group in proportion to the transmit rate of each queue.

The **guaranteed-rate** setting in the traffic control profile configuration determines the minimum guaranteed bandwidth for a priority group. The guaranteed rate also determines the amount of excess (extra) port bandwidth that the priority group can share. Extra port bandwidth is allocated among the priority groups on a port in proportion to the guaranteed rate of each priority group.

NOTE: You must configure both the **transmit-rate** value for the queue and the **guaranteed-rate** value for the priority group to set a valid minimum bandwidth guarantee for a queue. (If the priority group does not have a guaranteed minimum bandwidth, there is no guaranteed bandwidth pool from which the queue can take its guaranteed minimum bandwidth.)

The sum of the queue transmit rates in a priority group should not exceed the guaranteed rate for the priority group. (You cannot guarantee a minimum bandwidth for the queues that is greater than the minimum bandwidth guaranteed for the entire set of queues.)

NOTE: When you configure bandwidth for a queue or a priority group, the switch considers only the data as the configured bandwidth. The switch does not account for the bandwidth consumed by the preamble and the interframe gap (IFG). Therefore, when you calculate and configure the bandwidth requirements for a queue or for a priority group, consider the preamble and the IFG as well as the data in the calculations.

Copyright © 2018, Juniper Networks, Inc.

NOTE: You cannot configure minimum guaranteed bandwidth on strict-high priority queues or on a priority group that contains strict-high priority queues.

This example describes how to:

- Configure a transmit rate (minimum guaranteed queue bandwidth) of 2 Gbps for queues in a scheduler named **be-sched**.
- Configure a guaranteed rate (minimum guaranteed priority group bandwidth) of 4 Gbps for a priority group in a traffic control profile named **be-tcp**.
- Assign the scheduler to a queue named **best-effort** by using a scheduler map named **be-map**.
- Associate the scheduler map **be-map** with the traffic control profile **be-tcp**.
- Assign the queue **best-effort** to a priority group named **be-pg**.
- Assign the priority group and the minimum guaranteed bandwidth scheduling to the egress interface **xe-0/0/7**.

Table 65 on page 231 shows the configuration components for this example:

Table 65: Components of the Minimum Guaranteed Output Bandwidth Configuration Example

Component	Settings
Hardware	QFX3500 switch
Minimum guaranteed queue bandwidth	Transmit rate: **2g**
Minimum guaranteed priority group bandwidth	Guaranteed rate: **4g**
Scheduler	**be-sched**
Scheduler map	**be-map**
Traffic control profile	**be-tcp**
Forwarding class set (priority group)	**be-pg**
Queue (forwarding class)	**best-effort**
Egress interface	**xe-0/0/7**

Configuring Guaranteed Minimum Bandwidth

CLI Quick Configuration To quickly configure the minimum guaranteed bandwidth for a priority group and a queue, copy the following commands, paste them in a text file, remove line breaks, change

variables and details to match your network configuration, and then copy and paste the commands into the CLI at the [edit] hierarchy level:

```
[edit class-of-service]
set schedulers be-sched transmit-rate percent 2g
set traffic-control-profiles be-tcp guaranteed-rate 4g
set scheduler-maps be-map forwarding-class best-effort scheduler be-sched
set traffic-control-profiles be-tcp scheduler-map be-map
set forwarding-class-sets be-pg class best-effort
set interfaces xe-0/0/7 forwarding-class-set be-pg output-traffic-control-profile be-tcp
```

To configure the minimum guaranteed bandwidth hierarchical scheduling for a queue and a priority group:

1. Configure the minimum guaranteed queue bandwidth of 2 Gbps for scheduler **be-sched**:

   ```
   [edit class-of-service schedulers]
   user@switch# set be-sched transmit-rate 2g
   ```

2. Configure the minimum guaranteed priority group bandwidth of 4 Gbps for traffic control profile **be-tcp**:

   ```
   [edit class-of-service traffic-control-profiles]
   user@switch# set be-tcp guaranteed-rate 4g
   ```

3. Associate the scheduler **be-sched** with the **best-effort** queue in the scheduler map **be-map**:

   ```
   [edit class-of-service scheduler-maps]
   user@switch# set be-map forwarding-class best-effort scheduler be-sched
   ```

4. Associate the scheduler map with the traffic control profile:

   ```
   [edit class-of-service traffic-control-profiles]
   user@switch# set be-tcp scheduler-map be-map
   ```

5. Assign the **best-effort** queue to the priority group **be-pg**:

   ```
   [edit class-of-service forwarding-class-sets]
   user@switch# set be-pg class best-effort
   ```

6. Apply the configuration to interface **xe-0/0/7**:

   ```
   [edit class-of-service interfaces]
   user@switch# set xe-0/0/7 forwarding-class-set be-pg output-traffic-control-profile be-tcp
   ```

Verification

To verify the minimum guaranteed output bandwidth configuration, perform these tasks:

- Verifying the Minimum Guaranteed Queue Bandwidth on page 233
- Verifying the Priority Group Minimum Guaranteed Bandwidth and Scheduler Map Association on page 233

 Copyright © 2018, Juniper Networks, Inc.

- Verifying the Scheduler Map Configuration on page 233
- Verifying Queue (Forwarding Class) Membership in the Priority Group on page 234
- Verifying the Egress Interface Configuration on page 234

Verifying the Minimum Guaranteed Queue Bandwidth

Purpose Verify that you configured the minimum guaranteed queue bandwidth as **2g** in the scheduler **be-sched**.

Action Display the minimum guaranteed bandwidth in the **be-sched** scheduler configuration using the operational mode command **show configuration class-of-service schedulers be-sched transmit-rate**:

```
user@switch> show configuration class-of-service schedulers be-sched transmit-rate
2g;
```

Verifying the Priority Group Minimum Guaranteed Bandwidth and Scheduler Map Association

Purpose Verify that the minimum guaranteed priority group bandwidth is **4g** and the attached scheduler map is **be-map** in the traffic control profile **be-tcp**.

Action Display the minimum guaranteed bandwidth in the **be-tcp** traffic control profile configuration using the operational mode command **show configuration class-of-service traffic-control-profiles be-tcp guaranteed-rate**:

```
user@switch> show configuration class-of-service traffic-control-profiles be-tcp guaranteed-rate
4g;
```

Display the scheduler map in the **be-tcp** traffic control profile configuration using the operational mode command **show configuration class-of-service traffic-control-profiles be-tcp scheduler-map**:

```
user@switch> show configuration class-of-service traffic-control-profiles be-tcp scheduler-map
scheduler-map be-map;
```

Verifying the Scheduler Map Configuration

Purpose Verify that the scheduler map **be-map** maps the forwarding class **best-effort** to the scheduler **be-sched**.

Action Display the **be-map** scheduler map configuration using the operational mode command **show configuration class-of-service schedulers maps be-map**:

```
user@switch> show configuration class-of-service scheduler-maps be-map
forwarding-class best-effort scheduler be-sched;
```

Verifying Queue (Forwarding Class) Membership in the Priority Group

Purpose Verify that the forwarding class set **be-pg** includes the forwarding class **best-effort**.

Action Display the **be-pg** forwarding class set configuration using the operational mode command **show configuration class-of-service forwarding-class-sets be-pg**:

```
user@switch> show configuration class-of-service forwarding-class-sets be-pg
class best-effort;
```

Verifying the Egress Interface Configuration

Purpose Verify that the forwarding class set **be-pg** and the traffic control profile **be-tcp** are attached to egress interface **xe-0/0/7**.

Action Display the egress interface using the operational mode command **show configuration class-of-service interfaces xe-0/0/7**:

```
user@switch> show configuration class-of-service interfaces xe-0/0/7
forwarding-class-set {
    be-pg {
        output-traffic-control-profile be-tcp;
    }
}
```

Related Documentation

- Example: Configuring CoS Hierarchical Port Scheduling (ETS) on page 198
- Example: Configuring Queue Schedulers on page 169
- Example: Configuring Traffic Control Profiles (Priority Group Scheduling) on page 188
- Example: Configuring Queue Scheduling Priority on page 178
- Example: Configuring Forwarding Class Sets on page 120
- Understanding CoS Traffic Control Profiles on page 182
- Understanding CoS Hierarchical Port Scheduling (ETS) on page 192

 Copyright © 2018, Juniper Networks, Inc.

Troubleshooting Egress Bandwidth That Exceeds the Configured Minimum Bandwidth

Problem **Description:** The guaranteed minimum bandwidth of a queue (forwarding class) or a priority group (forwarding class set) when measured at the egress port exceeds the guaranteed minimum bandwidth configured for the queue (transmit-rate) or for the priority group (guaranteed-rate).

NOTE: On switches that support enhanced transmission selection (ETS) hierarchical scheduling, the switch allocates guaranteed minimum bandwidth first to a priority group using the guaranteed rate setting in the traffic control profile, and then allocates priority group minimum guaranteed bandwidth to forwarding classes in the priority group using the transmit rate setting in the queue scheduler.

On switches that support direct port scheduling, there is no scheduling hierarchy. The switch allocates port bandwidth to forwarding classes directly, using the transmit rate setting in the queue scheduler.

In this topic, if you are using direct port scheduling on your switch, ignore the references to priority groups and forwarding class sets (priority groups and forwarding class sets are only used for ETS hierarchical port scheduling). For direct port scheduling, only the transmit rate queue scheduler setting can cause the issue described in this topic.

Cause When you configure bandwidth for a queue or a priority group, the switch accounts for the configured bandwidth as data only. The switch does not include the preamble and the interframe gap (IFG) associated with frames, so the switch does not account for the bandwidth consumed by the preamble and the IFG in its minimum bandwidth calculations.

The measured egress bandwidth can exceed the configured minimum bandwidth when small packet sizes (64 or 128 bytes) are transmitted because the preamble and the IFG are a larger percentage of the total traffic. For larger packet sizes, the preamble and IFG overhead are a small portion of the total traffic, and the effect on egress bandwidth is minor.

NOTE: For ETS, the sum of the queue transmit rates in a priority group should not exceed the guaranteed rate for the priority group. (You cannot guarantee a minimum bandwidth for the queues that is greater than the minimum bandwidth guaranteed for the entire set of queues.)

For port scheduling, the sum of the queue transmit rates should not exceed the port bandwidth.

Solution When you calculate the bandwidth requirements for queues and priority groups on which you expect a significant amount of traffic with small packet sizes, consider the transmit rate and the guaranteed rate as the minimum bandwidth for the data only. Add sufficient bandwidth to your calculations to account for the preamble and IFG so that the port bandwidth is sufficient to handle the combined minimum data rate and the preamble and IFG.

If the minimum bandwidth measured at the egress port exceeds the amount of bandwidth that you want to allocate to a queue or to a priority group, reduce the transmit rate for that queue and reduce the guaranteed rate of the priority group that contains the queue.

Related Documentation

- **transmit-rate on page 695**
- Example: Configuring Minimum Guaranteed Output Bandwidth on page 229

Example: Configuring Maximum Output Bandwidth

Scheduling the maximum output bandwidth for a queue (forwarding class) requires configuring both tiers of the hierarchical scheduler. One tier is scheduling the resources for the individual queue. The other tier is scheduling the resources for the priority group (forwarding class set) to which the queue belongs. You can use priority group and queue shaping to prevent traffic from using more bandwidth than you want the traffic to receive.

- Requirements on page 236
- Overview on page 236
- Configuring Maximum Bandwidth on page 238
- Verification on page 239

Requirements

This example uses the following hardware and software components:

- One switch (this example was tested on a Juniper Networks QFX3500 Switch)
- Junos OS Release 11.1 or later for the QFX Series or Junos OS Release 14.1X53-D20 or later for the OCX Series

Overview

The priority group maximum bandwidth defines the maximum total amount of bandwidth available for all of the queues in the priority group.

The **shaping-rate** setting in the scheduler configuration determines the maximum bandwidth for an individual queue.

The **shaping-rate** setting in the traffic control profile configuration determines the maximum bandwidth for a priority group.

 Copyright © 2018, Juniper Networks, Inc.

NOTE: When you configure bandwidth for a queue or a priority group, the switch considers only the data as the configured bandwidth. The switch does not account for the bandwidth consumed by the preamble and the interframe gap (IFG). Therefore, when you calculate and configure the bandwidth requirements for a queue or for a priority group, consider the preamble and the IFG as well as the data in the calculations.

NOTE: When you set the maximum bandwidth (**shaping-rate**) for a queue or for a priority group at 100 Kbps or less, the traffic shaping behavior is accurate only within +/– 20 percent of the configured **shaping-rate** value.

This example describes how to:

- Configure a maximum rate of 4 Gbps for queues in a scheduler named **be-sched**.
- Configure a maximum rate of 6 Gbps for a priority group in a traffic control profile named **be-tcp**.
- Assign the scheduler to a queue named **best-effort** by using a scheduler map named **be-map**.
- Associate the scheduler map **be-map** with the traffic control profile **be-tcp**.
- Assign the queue **best-effort** to a priority group named **be-pg**.
- Assign the priority group and the bandwidth scheduling to the interface **xe-0/0/7**.

Table 66 on page 237 shows the configuration components for this example:

Table 66: Components of the Maximum Output Bandwidth Configuration Example

Component	Settings
Hardware	QFX3500 switch
Maximum queue bandwidth	Shaping rate: **4g**
Maximum priority group bandwidth	Shaping rate: **6g**
Scheduler	**be-sched**
Scheduler map	**be-map**
Traffic control profile	**be-tcp**
Forwarding class set (priority group)	**be-pg**
Queue (forwarding class)	**best-effort**
Egress interface	**xe-0/0/7**

Configuring Maximum Bandwidth

CLI Quick Configuration

To quickly configure the maximum bandwidth for a priority group and a queue, copy the following commands, paste them in a text file, remove line breaks, change variables and details to match your network configuration, and then copy and paste the commands into the CLI at the [edit] hierarchy level:

```
[edit class-of-service]
set schedulers be-sched shaping-rate percent 4g
set traffic-control-profiles be-tcp shaping-rate 6g
set scheduler-maps be-map forwarding-class best-effort scheduler be-sched
set traffic-control-profiles be-tcp scheduler-map be-map
set forwarding-class-sets be-pg class best-effort
set interfaces xe-0/0/7 forwarding-class-set be-pg output-traffic-control-profile be-tcp
```

To configure the maximum bandwidth hierarchical scheduling for a queue and a priority group:

1. Configure the maximum queue bandwidth of 4 Gbps for scheduler **be-sched**:

   ```
   [edit class-of-service schedulers]
   user@switch# set be-sched shaping-rate 4g
   ```

2. Configure the maximum priority group bandwidth of 6 Gbps for traffic control profile **be-tcp**:

   ```
   [edit class-of-service traffic-control-profiles]
   user@switch# set be-tcp shaping-rate 6g
   ```

3. Associate the scheduler **be-sched** with the **best-effort** queue in the scheduler map **be-map**:

   ```
   [edit class-of-service scheduler-maps]
   user@switch# set be-map forwarding-class best-effort scheduler be-sched
   ```

4. Associate the scheduler map with the traffic control profile:

   ```
   [edit class-of-service traffic-control-profiles]
   user@switch# set be-tcp scheduler-map be-map
   ```

5. Assign the **best-effort** queue to the priority group **be-pg**:

   ```
   [edit class-of-service forwarding-class-sets]
   user@switch# set be-pg class best-effort
   ```

6. Apply the configuration to interface **xe-0/0/7**:

   ```
   [edit class-of-service interfaces]
   user@switch# set xe-0/0/7 forwarding-class-set be-pg output-traffic-control-profile be-tcp
   ```


Copyright © 2018, Juniper Networks, Inc.

Verification

To verify the maximum output bandwidth configuration, perform these tasks:

- Verifying the Maximum Queue Bandwidth on page 239
- Verifying the Priority Group Maximum Bandwidth and Scheduler Map Association on page 239
- Verifying the Scheduler Map Configuration on page 240
- Verifying Queue (Forwarding Class) Membership in the Priority Group on page 240
- Verifying the Egress Interface Configuration on page 240

Verifying the Maximum Queue Bandwidth

Purpose Verify that you configured the maximum queue bandwidth as **4g** in the scheduler **be-sched**.

Action List the maximum bandwidth in the **be-sched** scheduler configuration using the operational mode command **show configuration class-of-service schedulers be-sched shaping-rate**:

```
user@switch> show configuration class-of-service schedulers be-sched shaping-rate
4g;
```

Verifying the Priority Group Maximum Bandwidth and Scheduler Map Association

Purpose Verify that the maximum priority group bandwidth is **6g** and the attached scheduler map is **be-map** in the traffic control profile **be-tcp**.

Action List the maximum bandwidth in the **be-tcp** traffic control profile configuration using the operational mode command **show configuration class-of-service traffic-control-profiles be-tcp shaping-rate**:

```
user@switch> show configuration class-of-service traffic-control-profiles be-tcp shaping-rate
4g;
```

List the scheduler map in the **be-tcp** traffic control profile configuration using the operational mode command **show configuration class-of-service traffic-control-profiles be-tcp scheduler-map**:

```
user@switch> show configuration class-of-service traffic-control-profiles be-tcp scheduler-map
scheduler-map be-map;
```

Verifying the Scheduler Map Configuration

Purpose Verify that the scheduler map **be-map** maps the forwarding class **best-effort** to the scheduler **be-sched**.

Action List the **be-map** scheduler map configuration using the operational mode command **show configuration class-of-service schedulers maps be-map**:

```
user@switch> show configuration class-of-service scheduler-maps be-map
forwarding-class best-effort scheduler be-sched;
```

Verifying Queue (Forwarding Class) Membership in the Priority Group

Purpose Verify that the forwarding class set **be-pg** includes the forwarding class **best-effort**.

Action List the **be-pg** forwarding class set configuration using the operational mode command **show configuration class-of-service forwarding-class-sets be-pg**:

```
user@switch> show configuration class-of-service forwarding-class-sets be-pg
class best-effort;
```

Verifying the Egress Interface Configuration

Purpose Verify that the forwarding class set **be-pg** and the traffic control profile **be-tcp** are attached to egress interface **xe-0/0/7**.

Action List the egress interface using the operational mode command **show configuration class-of-service interfaces xe-0/0/7**:

```
user@switch> show configuration class-of-service interfaces xe-0/0/7
forwarding-class-set {
    be-pg {
        output-traffic-control-profile be-tcp;
    }
}
```

Related Documentation

- Example: Configuring CoS Hierarchical Port Scheduling (ETS) on page 198
- Example: Configuring Queue Schedulers on page 169
- Example: Configuring Traffic Control Profiles (Priority Group Scheduling) on page 188
- Example: Configuring Forwarding Class Sets on page 120
- Understanding CoS Traffic Control Profiles on page 182

 Copyright © 2018, Juniper Networks, Inc.

- Understanding CoS Hierarchical Port Scheduling (ETS) on page 192

Troubleshooting Egress Bandwidth That Exceeds the Configured Maximum Bandwidth

Problem **Description:** The maximum bandwidth of a queue when measured at the egress port exceeds the maximum bandwidth rate shaper (**shaping-rate** statement on QFX5200, QFX5100, EX4600, QFX3500, QFX3600, and OCX1100 switches, and on QFabric systems, and **transmit-rate (rate | percentage *percent* exact** statement on QFX10000 switches) configured for the queue.

Cause When you configure bandwidth for a queue (forwarding class) or a priority group (forwarding class set), the switch accounts for the configured bandwidth as data only. The switch does not rate-shape the preamble and the interframe gap (IFG) associated with frames, so the switch does not account for the bandwidth consumed by the preamble and the IFG in its maximum bandwidth calculations.

The measured egress bandwidth can exceed the configured maximum bandwidth when small packet sizes (64 or 128 bytes) are transmitted because the preamble and the IFG are a larger percentage of the total traffic. For larger packet sizes, the preamble and IFG overhead are a small portion of the total traffic, and the effect on egress bandwidth is minor.

Solution When you calculate the bandwidth requirements for queues on which you expect a significant amount of traffic with small packet sizes, consider the shaping rate as the maximum bandwidth for the data only. Add sufficient bandwidth to your calculations to account for the preamble and IFG so that the port bandwidth is sufficient to handle the combined maximum data rate (shaping rate) and the preamble and IFG.

If the maximum bandwidth measured at the egress port exceeds the amount of bandwidth that you want to allocate to the queue, reduce the shaping rate for that queue.

Troubleshooting Egress Queue Bandwidth Impacted by Congestion

Problem **Description:** Congestion on an egress port causes egress queues to receive less bandwidth than expected. Egress port congestion can impact the amount of bandwidth allocated to queues on the congested port and, in some cases, on ports that are not congested.

Cause Egress queue congestion can cause the ingress port buffer to fill above a certain threshold and affect the flow to the queues on the egress port. One queue receives its configured bandwidth, but the other queues on the egress port are affected and do not receive their configured share of bandwidth.

Solution The solution is to configure a drop profile to apply weighted random early detection (WRED) to the queue or queues on the congested ports.

Copyright © 2018, Juniper Networks, Inc.

Configure a drop profile on the queue that is receiving its configured bandwidth. This queue is preventing the other queues from receiving their expected bandwidth. The drop profile prevents the queue from affecting the other queues on the port.

To configure a WRED profile using the CLI:

Name the drop profile and set the drop start point, drop end point, minimum drop rate, and maximum drop rate for the drop profile:

```
[edit class-of-service]
user@switch# set drop-profile drop-profile-name interpolate fill-level percentage fill-level
percentage drop-probability 0 drop-probability percentage
```

Related Documentation

- drop-profile on page 676
- Example: Configuring WRED Drop Profiles on page 252
- Example: Configuring CoS Hierarchical Port Scheduling (ETS) on page 198
- Understanding CoS WRED Drop Profiles on page 243

Copyright © 2018, Juniper Networks, Inc.

Understanding CoS WRED Drop Profiles

When the number of packets queued is greater than the ability of the switch to empty an output queue, the queue requires a method for determining which packets to drop to relieve the congestion. Weighted random early detection (WRED) drop profiles define the drop probability of packets of different packet loss probabilities (PLPs) as the output queue fills. During periods of congestion, as the output queue fills, the switch drops incoming packets as determined by a drop profile, until the output queue becomes less congested.

Depending on the drop probabilities, a drop profile can drop many packets long before the buffer becomes full, or it can drop only a few packets even if the buffer is almost full.

You configure drop profiles in the drop profile section of the class-of-service (CoS) configuration hierarchy. You apply drop profiles using a drop profile map in queue scheduler configuration. For each queue scheduler, you can configure separate drop profiles for each PLP using the **loss-priority** attribute (low, medium-high, and high). This enables you to treat traffic of different PLPs in different ways during periods of congestion.

NOTE: Do not apply drop profiles to lossless traffic (traffic that belongs to a forwarding class that has the no-loss drop attribute.). Lossless traffic uses priority-based flow control (PFC) to control congestion.

OCX Series switches do not support lossless transport and do not support PFC.

NOTE: You cannot apply drop profiles to multidestination queues on switches that support them.

- Drop Profile Parameters on page 244
- Defining Drop Profiles on Switches Except QFX10000 on page 244
- Defining Drop Profiles on QFX10000 Switches on page 245
- Default Drop Profile on page 246
- Packet Drop Method on page 246
- Packet Drop Example for Switches Except QFX10000 on page 246
- Drop Profile Maps on page 247
- Congestion Prevention on page 247
- Configuring a WRED Drop Profile and Applying it to an Output Queue on page 248
- Drop Profiles on Explicit Congestion Notification Enabled Queues on page 249

Copyright © 2018, Juniper Networks, Inc.

Drop Profile Parameters

Drop profiles specify two values, which work as pairs:

- Fill level—The queue fullness value, which represents a percentage of the memory used to store packets in relation to the total amount of memory allocated to the queue.
- Drop probability—The percentage value that corresponds to the likelihood that an individual packet is dropped.

Defining Drop Profiles on Switches Except QFX10000

You set two queue fill levels and two drop probabilities in each drop profile. The first fill level and the first drop probability create one value pair and the second fill level and the second drop probability create a second value pair.

The first fill level value specifies the percentage of queue fullness at which packets begin to drop, known as the drop start point. Until the queue reaches this level of fullness, no packets are dropped. The second fill level value specifies the percentage of queue fullness at which all packets are dropped, known as the drop end point.

The first drop probability value is always **0** (zero). This pairs with the drop start point and specifies that until the queue fullness level reaches the first fill level, no packets drop. When the queue fullness exceeds the drop start point, packets begin to drop until the queue exceeds the second fill level, when all packets drop. The second drop probability value, known as the maximum drop rate, specifies the likelihood of dropping packets when the queue fullness reaches the drop end point. As the queue fills from the drop start point to the drop end point, packets drop in a smooth, linear pattern (called an interpolated graph) as shown in Figure 11 on page 244. After the drop end point, all packets drop.

Figure 11: WRED-Drop Profile Packet Drop Pattern

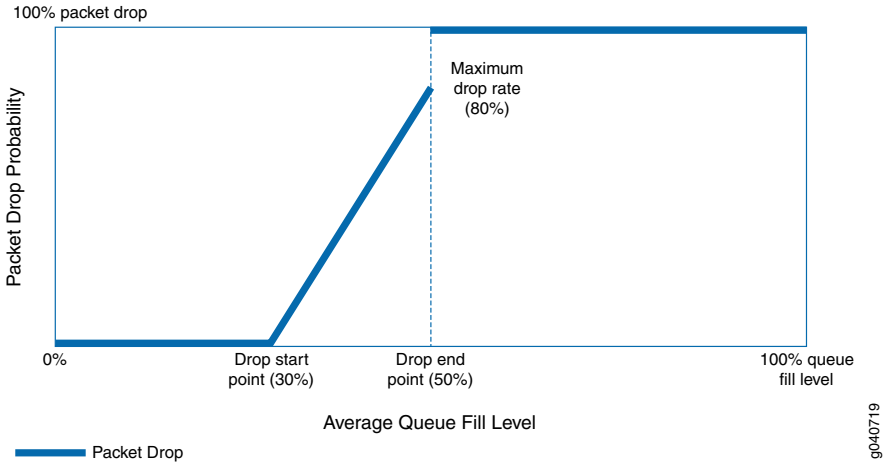

The thick line in Figure 11 on page 244 shows the packet drop characteristics for a sample WRED profile. At the drop start point, the queue reaches a fill level of 30 percent. At the

Copyright © 2018, Juniper Networks, Inc.

drop end point, the queue fill level reaches 50 percent, and the maximum drop rate is 80 percent.

No packets drop until the queue fill level reaches the drop start point of 30 percent. When the queue reaches the 30 percent fill level, packets begin to drop. As the queue fills, the percentage of packets dropped increases in a linear fashion. When the queue fills to the drop end point of 50 percent, the rate of packet drop has increased to the maximum drop rate of 80 percent. When the queue fill level exceeds the drop end point of 50 percent, all of the packets drop until the queue fill level drops below 50 percent.

Defining Drop Profiles on QFX10000 Switches

Each queue fill level pairs with a drop probability. As the queue fills to different levels, every time it reaches a fill level configured in a drop profile, the queue applies the drop probability paired with that fill level to the traffic in the queue that exceeds the fill level. You can configure up to 32 pairs of fill levels and drop probabilities to create a customized packet drop probability curve with up to 32 points of differentiation.

Packets are not dropped until they reach the first configured queue fill level. When the queue reaches the first fill level, packets begin to drop at the configured drop probability rate paired with the first fill level. When the queue reaches the second fill level, packets begin to drop at the configured drop probability rate paired with the second fill level. This process continues for the number of fill level/drop probability pairs that you configure in the drop profile.

Drop profiles are interpolated, not segmented. An interpolated drop profile gradually increases the drop probability along a curve between each configured fill level. When the queue reaches the next fill level, the drop probability reaches the drop probability paired with that fill level. A segmented drop profile “jumps” from one fill level and drop probability setting to another in a stepped fashion. The drop probability of traffic does not change as the queue fills until the next fill level is reached.

An example of interpolation is a drop profile with three fill level/drop probability pairs:

- 25 percent queue fill level paired with a 30 percent drop probability
- 50 percent queue fill level paired with a 60 percent drop probability
- 75 percent queue fill level paired with a 100 percent drop probability (all packets that exceed the 75 percent queue fill level are dropped)

The queue drops no packets until its fill level reaches 25 percent. During periods of congestion, when the queue fills above 25 percent full, the queue begins to drop packets at a rate of 30 percent of the packets above the fill level.

However, as the queue continues to fill, it does not continue to drop packets at the 30 percent drop probability. Instead, the drop probability gradually increases as the queue fills to the 50 percent fullness level. When the queue reaches the 50 percent fill level, the drop probability has increased to the configured drop probability pair for the fill level, which is 60 percent.

As the queue continues to fill, the drop probability does not remain at 60 percent, but continues to rise as the queue fills. When the queue reaches the final fill level at 75 percent

Copyright © 2018, Juniper Networks, Inc.

full, the drop probability has risen to 100 percent and all packets that exceed the 75 percent fill level are dropped.

Default Drop Profile

If you do not configure drop profiles and apply them to queue schedulers, the switch uses the default drop profile for lossy traffic classes. In the default drop profile, when the fill level is 0 percent, the drop probability is 0 percent. When the fill level is 100 percent, the drop probability is 100 percent. During periods of congestion, as soon as packets arrive on a queue, the default profile might begin to drop packets.

Packet Drop Method

When a packet reaches the head of a queue, the switch calculates a random number between 0 and 100. The switch plots the random number against the drop profile using the current fill level of the queue. When the random number falls above the graph line, the queue transmits the packet out the egress interface. When the number falls below graph the line, the switch drops the packet.

Packet Drop Example for Switches Except QFX10000

To create the linear drop pattern from the drop start point to the drop end point, the drop probabilities are derived using a linear approximation with eight sections, or steps, from the minimum queue fill level to the maximum queue fill level. The fill levels are divided into the eight sections equally, starting at the minimum fill level and ending at the maximum fill level. As the queue fills, the percentage of dropped packets increases. The percentage of packets dropped is based on the maximum drop rate.

For example, the default drop profile (which specifies a maximum drop rate of 100 percent) has the following drop probabilities at each section, or step, in the eight-section linear drop pattern:

- First section—The minimum drop probability is 6.25 percent of the maximum drop rate. The maximum drop probability is 12.5 percent of the maximum drop rate.
- Second section—The minimum drop probability is 18.75 percent of the maximum drop rate. The maximum drop probability is 25 percent of the maximum drop rate.
- Third section—The minimum drop probability is 30.25 percent of the maximum drop rate. The maximum drop probability is 37.5 percent of the maximum drop rate.
- Fourth section—The minimum drop probability is 43.75 percent of the maximum drop rate. The maximum drop probability is 50 percent of the maximum drop rate.
- Fifth section—The minimum drop probability is 56.25 percent of the maximum drop rate. The maximum drop probability is 62 percent of the maximum drop rate.
- Sixth section—The minimum drop probability is 68.75 percent of the maximum drop rate. The maximum drop probability is 75.5 percent of the maximum drop rate.
- Seventh section—The minimum drop probability is 81.25 percent of the maximum drop rate. The maximum drop probability is 87.5 percent of the maximum drop rate.
- Eighth section—The minimum drop probability is 92.75 percent of the maximum drop rate. The maximum drop probability is 100 percent of the maximum drop rate.

 Copyright © 2018, Juniper Networks, Inc.

Packets drop even when there is no congestion, because packet drops begin at the drop start point regardless of whether congestion exists on the port. The default drop profile example represents the worst-case scenario, because the drop start point fill level is 0 percent, so packet drop begins when the queue starts to receive packets.

You can specify when packets begin to drop by configuring a drop start point at a fill level greater than 0 percent. For example, if you configure a drop profile that has a drop start point of 30 percent, packets do not drop until the queue is 30 percent full. We recommend that you configure drop profiles that are appropriate to your network traffic conditions.

The smaller the gap between the minimum drop rate (which is always 0) and the maximum drop rate, the smaller the gap between the minimum drop probability and the maximum drop probability at each section (step) of the linear drop pattern. The default drop profile, which has the maximum gap between the minimum drop rate (0 percent) and the maximum drop rate (100 percent), has the highest gap between the minimum drop probability and the maximum drop probability at each step. Configuring a lower maximum drop rate for a drop profile reduces the gap between the minimum drop probability and the maximum drop probability.

Drop Profile Maps

Drop profile maps are part of scheduler configuration. A drop profile map maps drop profiles to packet loss priorities. Specifying the drop profile map in a scheduler associates the drop profile with the forwarding classes (queues) that you map to the scheduler in a scheduler map.

You configure loss priority for a queue in the classifier section of the CoS configuration hierarchy, and the loss priority is applied to the traffic assigned to the forwarding class at the ingress interface.

Each scheduler can have multiple drop profile maps.

Congestion Prevention

Configuring drop profiles on output queues enables you to control how congestion affects other queues on a port. If you do not configure drop profiles and map them to output queues, the switch uses the default drop profile on queues that forward lossy traffic.

For example, if an ingress port forwards traffic to more than one egress port, and at least one of the egress ports experiences congestion, that can cause ingress port congestion. Ingress port congestion (ingress buffer exceeds its resource allocation) can cause frames to drop at the ingress port instead of at the egress port. Ingress port frame drop affects all of the egress ports to which the congested ingress port forwards traffic, not just the congested egress port.

Copyright © 2018, Juniper Networks, Inc.

NOTE: Do not configure drop profiles for the **fcoe** and **no-loss** forwarding classes. FCoE and other lossless traffic queues require lossless behavior (traffic queues that are configured with the **no-loss** packet drop attribute). Use priority-based flow control (PFC) to prevent frame drop on lossless priorities.

OCX Series switches do not support lossless transport and do not support PFC.

Configuring a WRED Drop Profile and Applying it to an Output Queue

To configure a WRED packet drop profile and apply it to an output queue:

1. Configure a drop profile:
   - On switches except QFX10000 use the statement **set class-of-service drop-profiles** ***profile-name*** **interpolate fill-level** ***drop-start-point*** **fill-level** ***drop-end-point*** **drop-probability 0 drop-probability** ***percentage***.
   - On QFX10000 switches use the statement **set class-of-service drop-profiles** ***profile-name*** **interpolate fill-level** ***level1 level2 ... level32*** **drop-probability** ***probability1 probability2 ... probability32***. You can specify as few as two fill level/drop probability pairs or as many as 32 pairs.
2. Map the drop profile to a queue scheduler using the statement **set class-of-service schedulers** ***scheduler-name*** **drop-profile-map loss-priority (low | medium-high | high) protocol any drop-profile** ***profile-name***. The name of the drop-profile is the name of the WRED profile configured in Step 1.
3. Map the scheduler, which Step 2 associates with the drop profile, to the output queue using the statement **set class-of-service scheduler-maps** ***map-name*** **forwarding-class** ***forwarding-class-name*** **scheduler** ***scheduler-name***. The forwarding class identifies the output queue. Forwarding classes are mapped to output queues by default, and can be remapped to different queues by explicit user configuration. The scheduler name is the scheduler configured in Step 2.
4. On switches except QFX10000, associate the scheduler map with a traffic control profile using the statement **set class-of-service traffic-control-profiles** ***tcp-name*** **scheduler-map** ***map-name***. The scheduler map name is the name configured in Step 3.
5. On switches except QFX10000, associate the traffic control profile with an interface using the statement **set class-of-service interfaces** ***interface-name*** **forwarding-class-set** ***forwarding-class-set-name*** **output-traffic-control-profile** ***tcp-name***. The output traffic control profile name is the name of the traffic control profile configured in Step 4.

   The interface uses the scheduler map in the traffic control profile to apply the drop profile (and other attributes) to the output queue (forwarding class) on that interface. Because you can use different traffic control profiles to map different schedulers to

Copyright © 2018, Juniper Networks, Inc.

different interfaces, the same queue number on different interfaces can handle traffic in different ways.

6. On QFX10000 switches, associate the scheduler map with an interface using the statement **set class-of-service interfaces *interface-name* scheduler-map *scheduler-map-name*** .

   The interface uses the scheduler map to apply the drop profile (and other attributes) to the output queue mapped to the forwarding class on that interface. Because you can use different scheduler maps on different interfaces, the same queue number on different interfaces can handle traffic in different ways.

Drop Profiles on Explicit Congestion Notification Enabled Queues

You must configure a WRED drop profile on queues that you enable for explicit congestion notification (ECN). On ECN-enabled queues, the drop profile sets the threshold for when the queue should mark a packet as experiencing congestion (see *Understanding CoS Explicit Congestion Notification*). When a queue fills to the level at which the WRED drop profile has a packet drop probability greater than zero (0), the switch might mark a packet as experiencing congestion. Whether or not a switch marks a packet as experiencing congestion is the same probability as the drop probability of the queue at that fill level.

On ECN-enabled queues, the switch does not use the drop profile to control dropping packets that are not ECN-capable packets (packets marked non-ECT, ECN code bits 00) during periods of congestion. Instead, the switch uses the tail-drop algorithm to drop non-ECN-capable packets during periods of congestion. When a queue fills to its maximum level of fullness, tail-drop simply drops all subsequently arriving packets until there is space in the queue to buffer more packets. All non-ECN-capable packets are treated the same way.

To apply a WRED drop profile to non-ECT traffic, configure a multifield (MF) classifier to assign non-ECT traffic to a different output queue that is not ECN-enabled, and then apply the WRED drop profile to that queue.

Related Documentation

- Understanding Junos CoS Components on page 17
- Example: Configuring CoS Hierarchical Port Scheduling (ETS) on page 198
- *Understanding CoS Explicit Congestion Notification*
- Example: Configuring WRED Drop Profiles on page 252
- Example: Configuring Drop Profile Maps on page 258
- Example: Configuring Unicast Classifiers on page 72
- Configuring CoS WRED Drop Profiles on page 250
- Configuring CoS Drop Profile Maps on page 258
- Defining CoS BA Classifiers (DSCP, DSCP IPv6, IEEE 802.1p) on page 69

Copyright © 2018, Juniper Networks, Inc.

Configuring CoS WRED Drop Profiles

You can configure an interpolated weighted random early detection (WRED) profile to control traffic congestion by controlling packet drop characteristics for different packet loss priorities.

Drop profiles specify two values, which work as pairs:

- Fill level—The queue fullness value, which represents a percentage of the memory used to store packets in relation to the total amount of memory allocated to the queue.
- Drop probability—The percentage value that corresponds to the likelihood that an individual packet is dropped.

NOTE: Do not enable WRED on lossless traffic flows (forwarding classes configured with the **no-loss** packet drop attribute). Use priority-based flow control (PFC) to prevent packet loss on lossless forwarding classes.

Except on QFX10000, you cannot enable WRED on multidestination (multicast) queues on. You can enable WRED only on unicast queues.

OCX Series switches do not support lossless flows or PFC.

NOTE: On ECN-enabled queues, the drop profile sets the threshold for when the queue should mark a packet as experiencing congestion (see *Understanding CoS Explicit Congestion Notification*). On ECN-enabled queues, the switch does not use the drop profile to control dropping packets that are not ECN-capable packets during periods of congestion. Instead, the switch uses the tail-drop algorithm to drop non-ECN-capable packets during periods of congestion. When a queue fills to its maximum level of fullness, tail-drop simply drops all subsequently arriving packets until there is space in the queue to buffer more packets. All non-ECN-capable packets are treated the same way.

- Drop Profiles on Switches Except QFX10000 on page 250
- Drop Profiles on QFX 10000 Switches on page 251

Drop Profiles on Switches Except QFX10000

Interpolated means that the switch creates a smooth drop curve from a drop start point to a drop end point, with a maximum drop rate that is reached at the drop end point.

The dropstart point is the average queue fill level when the WRED algorithm starts to drop packets. Before the drop start point, no packets are scheduled to drop. Specify the drop start point using the first of two **fill-level** statements.

 Copyright © 2018, Juniper Networks, Inc.

The drop end point is the average queue fill level at which all subsequently arriving packets are dropped. When the queue fill levels falls below the drop end point, packets begin to be forwarded again. (At the drop end point, the packet drop probability becomes 100 percent.) Specify the drop end point using the second of two **fill-level** statements.

The minimum drop rate is always **0**. Specify the minimum drop rate using the first of two **drop-probability** statements. The maximum drop rate is the drop probability when the average queue fill level reaches the drop end point. Specify the maximum drop rate using the second of two **drop-probability** statements.

The drop rate is zero until the queue fill level reaches the drop start point. As the queue continues to fill, packets drop in smooth linear curveuntil the queue reaches the drop end point, when packets drop at the maximum drop rate. If the queue fills beyond the drop end point, all packets that match the drop profile are dropped.

To configure a WRED profile using the CLI on switches except QFX10000:

Name the drop profile and set the drop start point, drop end point, minimum drop rate, and maximum drop rate for the drop profile:

```
[edit class-of-service]
user@switch# set drop-profile drop-profile-name interpolate fill-level percentage fill-level
percentage drop-probability 0 drop-probability percentage
```

Drop Profiles on QFX 10000 Switches

Each queue fill level pairs with a drop probability. As the queue fills to different levels, every time it reaches afill level configured in a drop profile, the queue applies thedrop probability paired with that fill level to the traffic in the queue that exceeds the fill level. You can configure up to 32 pairs of fill levels and drop probabilities to create a customized packet drop probability curve with up to 32 points of differentiation.

Packets are not dropped until they reach the first configured queue fill level. When the queue reaches the firstfill level, packets begin to drop at the configured drop probability rate paired with the first fill level. When the queue reaches the second fill level, packets begin to drop at the configured drop probability rate paired with the second fill level. This process continues for the number of fill level/drop probability pairs that you configure in the drop profile.

Drop profiles are *interpolated*. An interpolated drop profile gradually increases the drop probability along a curve between each configured fill level. When the queue reaches the next fill level, the drop probability reaches the drop probability paired with that fill level.

To configure a WRED profile using the CLI on QFX10000 switches:

Name the drop profile and set the fill levels and their associated drop probabilities as percentages. For every fill level, there must be a paired drop probability (you must configure the same number of fill levels and drop probabilities).

```
[edit class-of-service]
```

```
user@switch# set drop-profile drop-profile-name interpolate fill-level level1 level2 ... level32
drop-probability probability1 probability2 ... probability32
```

Related Documentation

- Example: Configuring CoS Hierarchical Port Scheduling (ETS) on page 198
- Example: Configuring WRED Drop Profiles on page 252
- Defining CoS Queue Schedulers on page 166
- *Defining CoS Queue Schedulers for Port Scheduling*
- Configuring CoS Drop Profile Maps on page 258
- Understanding CoS WRED Drop Profiles on page 243

Example: Configuring WRED Drop Profiles

You can configure interpolated weighted random early detection (WRED) profiles to control traffic congestion by controlling packet drop characteristics for different packet loss priorities.

NOTE: Do not enable WRED on lossless traffic flows. Use priority-based flow control (PFC) to prevent packet loss on lossless forwarding classes. (OCX Series switches do not support lossless flows or PFC.)

Except on QFX10000 switches, you cannot enable WRED on multidestination (multicast) queues. You can enable WRED only on unicast queues.

- Requirements on page 252
- Overview on page 253
- Configuring WRED Drop Profiles on Switches Except QFX10000 on page 254
- Configuring WRED Drop Profiles on QFX10000 Switches on page 257

Requirements

This example uses the following hardware and software components:

- One switch
- Junos OS Release 11.1 or later for the QFX Series or Junos OS Release 14.1X53-D20 or later for the OCX Series or Junos OS Release 15.1X53-D10 or later for the QFX10000.

Copyright © 2018, Juniper Networks, Inc.

Overview

You associate WRED drop profiles with loss priorities in a scheduler. When you map the scheduler to a forwarding class (queue), you apply the interpolated drop profile to traffic of the specified loss priority on that queue. Drop profiles specify two values, which work as pairs:

- Fill level—The queue fullness value, which represents a percentage of the memory used to store packets in relation to the total amount of memory allocated to the queue.
- Drop probability—The percentage value that corresponds to the likelihood that an individual packet is dropped.

NOTE: On ECN-enabled queues, the drop profile sets the threshold for when the queue should mark a packet as experiencing congestion (see *Understanding CoS Explicit Congestion Notification*). On ECN-enabled queues, the switch does not use the drop profile to control dropping packets that are not ECN-capable packets during periods of congestion. Instead, the switch uses the tail-drop algorithm to drop non-ECN-capable packets during periods of congestion. When a queue fills to its maximum level of fullness, tail-drop simply drops all subsequently arriving packets until there is space in the queue to buffer more packets. All non-ECN-capable packets are treated the same way.

Copyright © 2018, Juniper Networks, Inc.

Configuring WRED Drop Profiles on Switches Except QFX10000

Configuration

Step-by-Step Procedure

Copyright © 2018, Juniper Networks, Inc.

Interpolated means that the switch creates a smooth drop curve from a drop start point to a drop end point, with a maximum drop rate that is reached at the drop end point:

- Drop start point—Percentage of average queue fill level when the WRED algorithm starts to drop packets. Before the drop start point, no packets are scheduled to drop.
- Drop end point—Average queue fill level at which all subsequently arriving packets are dropped. When the queue fill levels falls below the drop end point, packets begin to be forwarded again. (At the drop end point, the packet drop probability becomes 100 percent.)
- Maximum drop rate—Drop probability when the average queue fill level reaches the drop end point.

You set the drop start point and the drop end point by specifying two queue fill level percentage values. The first value is the drop start point and the second value is the drop end point.

You set the maximum drop rate by specifying two drop probability percentage values. The first value is always zero (0), which is the minimum drop rate, the probability of dropping a packet at the drop start point. The second value is the maximum drop rate at the drop end point.

The drop rate is zero until the queue fill level reaches the drop start point. As the queue continues to fill, packets drop in smooth linear curve until the queue reaches the drop end point, when packets drop at the maximum drop rate. If the queue fills beyond the drop end point, all packets that match the drop profile are dropped.

Figure 12 on page 255 shows the graph for a drop profile with a drop start point of 30 percent, a drop end point of 50 percent, and a maximum drop rate of 80 percent.

Figure 12: WRED Drop Profile Packet Drop Example

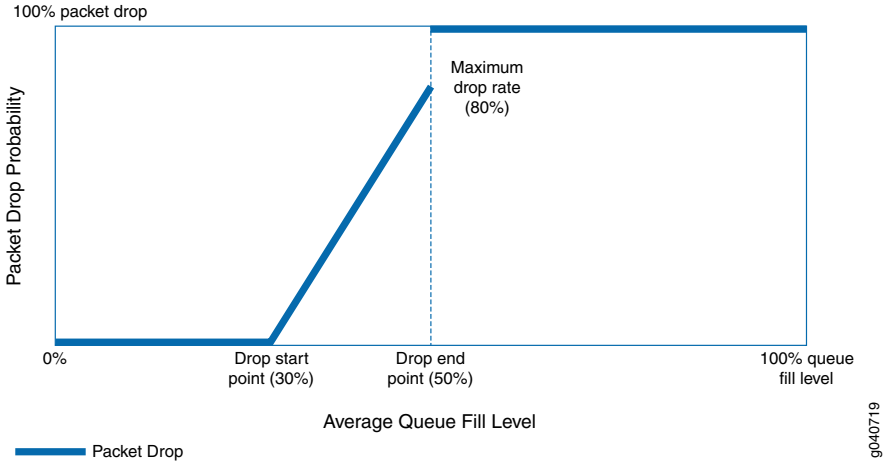

The graph shows that when the queue fill level is less than 30 percent, the packet drop rate is zero. When the queue fill level reaches 30 percent, packets begin to drop. As the queue fills, a higher percentage of packets drop. When the queue fill level reaches 50 percent, the packet drop rate has climbed to 80 percent. When the queue fill level exceeds 50 percent, all packets drop.

Copyright © 2018, Juniper Networks, Inc.

This example describes how to configure the drop profile shown in Figure 12 on page 255. The drop profile will have:

- The name **be-dp1**
- 30 percent for the drop start point (first **fill-level** setting)
- 50 percent for the drop end point (second **fill-level** setting)
- 0 percent for the minimum drop rate (first **drop-probability** setting)
- 80 percent for the maximum drop rate (second **drop-probability** setting)

You apply a drop profile by configuring a drop profile map that maps the drop profile to a packet loss priority, and associate the drop profile and packet loss priority with a scheduler. When you map the scheduler to a forwarding class (queue), the switch applies the drop profile to the packets in the forwarding class that have a matching packet loss priority.

1. Set the drop start point at **30** percent, the drop end point at **50** percent, the minimum drop rate at **0** percent, and the maximum drop rate at **80** percent for the drop profile **be-dp1**:

   ```
   [edit class-of-service]
   user@switch# set drop-profile be-dp1 interpolate fill-level 30 fill-level 50 drop-probability
   0 drop-probability 80
   ```

Verification

Verifying the Drop Profile Configuration

Purpose Verify that you configured the drop profile **be-dp1** with the correct drop start and end points and with the correct drop rates.

Action Verify the results of the drop profile configuration using the operational mode command **show configuration class-of-service drop-profiles be-dp1**:

```
user@switch> show configuration class-of-service drop-profiles be-dp1
interpolate {
    fill-level [ 30 50 ];
    drop-probability [ 0 80 ];
}
```

 Copyright © 2018, Juniper Networks, Inc.

Configuring WRED Drop Profiles on QFX10000 Switches

Configuration

Step-by-Step Procedure

Each queue fill level pairs with a drop probability. As the queue fills to different levels, every time it reaches a fill level configured in a drop profile, the queue applies the drop probability paired with that fill level to the traffic in the queue that exceeds the fill level. You can configure up to 32 pairs of fill levels and drop probabilities to create a customized packet drop probability curve with up to 32 points of differentiation.

Packets are not dropped until they reach the first configured queue fill level. When the queue reaches the first fill level, packets begin to drop at the configured drop probability rate paired with the first fill level. When the queue reaches the second fill level, packets begin to drop at the configured drop probability rate paired with the second fill level. This process continues for the number of fill level/drop probability pairs that you configure in the drop profile.

Drop profiles are *interpolated*. An interpolated drop profile gradually increases the drop probability along a curve between each configured fill level. When the queue reaches the next fill level, the drop probability reaches the drop probability paired with that fill level.

This example describes how to configure a drop profile with three fill level/drop probability pairs:

- Drop profile name—**be-dp1**
- Queue fill levels—25 percent, 50 percent, 75 percent
- Drop probabilities—30 percent, 60 percent, 100 percent

Each of the three fill levels pairs with a drop probability to program the interpolated drop profile curve.

You apply a drop profile by configuring a drop profile map that maps the drop profile to a packet loss priority, and associate the drop profile and packet loss priority with a scheduler. When you map the scheduler to a forwarding class (queue), the switch applies the drop profile to the packets in the forwarding class that have a matching packet loss priority.

To configure a drop profile:

1. Set the drop start point at a **25** percent fill level, an intermediate fill level of **50** percent, and a drop end point of **75** percent. Set the paired drop probabilities to **30** percent, **60** percent, and **100** percent, respectively, for drop profile **be-dp1**:

   ```
   [edit class-of-service]
   user@switch# set drop-profile be-dp1 interpolate fill-level [ 25 50 75 ] drop-probability [
   30 60 100 ]
   ```

Verification

Verifying the Drop Profile Configuration

Purpose Verify that you configured the drop profile **be-dp1** with the correct fill levels and drop probabilities.

Action Verify the results of the drop profile configuration using the operational mode command **show configuration class-of-service drop-profiles be-dp1**:

```
user@switch> show configuration class-of-service drop-profiles be-dp1
interpolate {
    fill-level [ 25 50 75 ];
    drop-probability [ 30 60 100 ];
}
```

Configuring CoS Drop Profile Maps

A drop-profile map associates weighted random early detection (WRED) profiles for traffic of specified packet loss priorities with a scheduler. When you use a scheduler map to map a scheduler to a forwarding class, the drop profile map associated with the scheduler applies the specified WRED drop profile to traffic in the forwarding class that matches the specified packet loss priority.

Drop profile maps enable you to configure different drop profiles for traffic of different packet loss priorities within the same scheduler. You can associate different drop profiles with low-priority, medium-high priority, and high-priority traffic within a single scheduler, and then map that scheduler to a forwarding class. This applies the appropriate drop profile to traffic of each loss priority in a forwarding class. Drop profile maps apply to all traffic protocols.

To configure a drop-profile map:

- For the desired scheduler, configure the traffic loss priority and specify the drop profile you want to use to control the drop characteristics for traffic of that loss priority:

  [edit class-of-service]
  user@switch# **set** schedulers ***scheduler-name*** drop-profile-map loss-priority ***level*** **protocol any** drop-profile ***drop-profile-name***

NOTE: **QFX10000 switches do not support the protocol any portion of the configuration. Drop profiles apply to all protocols.**

Example: Configuring Drop Profile Maps

A drop-profile map associates weighted random early detection (WRED) profiles for traffic of specified packet loss priorities with a scheduler. When you use a scheduler map to map a scheduler to a forwarding class, the drop profile map associated with the

 Copyright © 2018, Juniper Networks, Inc.

scheduler applies the specified WRED drop profile to traffic in the forwarding class that matches the specified packet loss priority.

- Requirements on page 259
- Overview on page 259
- Configuring a Drop Profile Map on page 259
- Verification on page 260

Requirements

This example uses the following hardware and software components:

- A Juniper Networks QFX3500 Switch
- Junos OS Release 11.1 or later for the QFX Series or Junos OS Release 14.1X53-D20 or later for the OCX Series.

Overview

Drop profile maps enable you to configure different drop profiles for traffic of different packet loss priorities within the same scheduler. You can associate different drop profiles with low-priority, medium-high priority, and high-priority traffic within a single scheduler, and then map that scheduler to a forwarding class. This applies the appropriate drop profile to traffic of each loss priority in a forwarding class. Drop profile maps apply to all traffic protocols.

The following example describes how to configure a drop profile map for a scheduler named **mylan** that includes:

- A drop profile called **lp-profile** for low-priority traffic
- A drop profile called **mh-profile** for medium-high priority traffic
- A drop profile called **h-profile** for high-priority traffic

You apply the drop profiles in the drop profile map to a forwarding class by associating the scheduler **mylan** with a forwarding class in a scheduler map.

Configuring a Drop Profile Map

CLI Quick Configuration

To quickly configure a drop profile map, copy the following commands, paste them in a text file, remove line breaks, change variables and details to match your network configuration, and then copy and paste the commands into the CLI at the [edit] hierarchy level.

```
[edit class-of-service]
set schedulers mylan drop-profile-map loss-priority low protocol any drop-profile lp-profile
set schedulers mylan drop-profile-map loss-priority medium-high protocol any drop-profile
mh-profile
set schedulers mylan drop-profile-map loss-priority high protocol any drop-profile h-profile
```

To configure a drop profile map:

1. Configure the drop profile for low-priority traffic:

   ```
   [edit class-of-service]
   user@switch# set schedulers mylan drop-profile-map loss-priority low protocol any
   drop-profile lp-profile
   ```

2. Configure the drop profile for medium-high priority traffic:

   ```
   [edit class-of-service]
   user@switch# set schedulers mylan drop-profile-map loss-priority medium-high protocol
   any drop-profile mh-profile
   ```

3. Configure the drop profile for high-priority traffic:

   ```
   [edit class-of-service]
   user@switch# set schedulers mylan drop-profile-map loss-priority high protocol any
   drop-profile h-profile
   ```

Verification

Verifying the Drop Profile Map Configuration

Purpose Verify that you configured the drop profile map for the scheduler **mylan** with the correct loss priorities and drop profiles.

Action Verify the results of the drop profile map configuration using the operational mode command **show configuration class-of-service schedulers mylan**:

```
user@switch> show configuration class-of-service schedulers mylan
transmit-rate 3g;
shaping-rate percent 100;
priority low;
drop-profile-map loss-priority low protocol any drop-profile lp-profile;
drop-profile-map loss-priority medium-high protocol any drop-profile mh-profile;
drop-profile-map loss-priority high protocol any drop-profile h-profile;
```

NOTE: This example does not include configuring scheduler bandwidth and priority. This information (transmit rate, shaping rate, and priority) is shown for completeness.

Related Documentation

- Example: Configuring CoS Hierarchical Port Scheduling (ETS) on page 198
- Example: Configuring Queue Schedulers on page 169
- *Example: Configuring Queue Schedulers for Port Scheduling*
- Example: Configuring WRED Drop Profiles on page 252

 Copyright © 2018, Juniper Networks, Inc.

- Configuring CoS Drop Profile Maps on page 258
- Understanding CoS WRED Drop Profiles on page 243

Troubleshooting a Port Reset on QFabric Systems When a Queue Stops Transmitting Traffic

Problem **Description:** In QFabric systems, if any queue that contains outgoing packets does not transmit packets for 12 consecutive seconds, the port automatically resets.

Cause Failure of a queue to transmit packets for 12 consecutive seconds may be due to:

- A strict-high priority queue consuming all of the port bandwidth
- Several queues consuming all of the port bandwidth
- Any queue or port receiving continuous priority-based flow control (PFC) or 802.3x Ethernet PAUSE messages (received PFC and PAUSE messages prevent a queue or a port, respectively, from transmitting packets because of network congestion)
- Other conditions that prevent a queue from obtaining port bandwidth for 12 consecutive seconds

Solution If the cause is a strict-high priority queue or other queues consuming all of the port bandwidth, you can use rate shaping to configure a maximum rate for the queues that are using all of the port bandwidth and preventing other queues from obtaining bandwidth on the port. You configure a maximum rate by creating a scheduler, using a scheduler map to apply it to a forwarding class (which maps to an output queue), and applying the scheduler map to the port using a forwarding class set and a traffic control profile.

To configure rate shaping using the CLI:

1. Name the existing scheduler or create a scheduler and define the maximum bandwidth as a rate or as a percentage:

   ```
   [edit class-of-service]
   user@switch# set schedulers scheduler-name shaping-rate (rate | percent percentage)
   ```

2. Configure a scheduler map to associate the scheduler with the forwarding class (queue) that is consuming all of the port bandwidth:

   ```
   [edit class-of-service]
   user@switch# set scheduler-maps scheduler-map-name forwarding-class
   forwarding-class-name scheduler scheduler-name
   ```

3. Associate the scheduler map with a traffic control profile:

   ```
   [edit class-of-service]
   ```

```
user@switch# set traffic-control-profiles traffic-control-profile-name scheduler-map
scheduler-map-name
```

4. Associate the traffic control profile (and thus the scheduler map that contains the rate shaping queue scheduler) with a forwarding class set and apply them to the interface that is being reset:

```
[edit class-of-service]
user@switch# set interfaces interface-name forwarding-class-set fc-set-name
output-traffic-control-profile traffic-control-profile-name
```

For example, a strict-high priority queue is using all of the bandwidth on interface **shpnode:xe-0/0/10** and preventing other queues from transmitting for 12 consecutive seconds. You decide to set a maximum rate of 7 Gbps on the strict-high priority queue to ensure that at least 3 Gbps of the port bandwidth is available to service other queues. Table 67 on page 262 shows the topology for this example:

Table 67: Components of the Rate Shaping Troubleshooting Example

Component	Settings
Affected interface	**shpnode:xe-0/0/10**
Scheduler (strict-high priority scheduler)	Name: **shp-sched** Shaping rate: **7g** Priority: **strict-high** NOTE: This example assumes that the scheduler already exists and has been configured as **strict-high** priority, but that rate shaping to prevent the strict-high priority traffic from using all of the port bandwidth has not been applied.
Scheduler map	Name: **shp-map** Forwarding class to associate with the **shp-sched** scheduler: **strict-high** NOTE: This example assumes that a strict-high priority forwarding class has been configured and assigned the name **strict-high**.
Traffic control profile	Name: **shp-tcp** NOTE: This example does not describe how to define a complete traffic control profile.
Forwarding class set	Name: **shp-pg**

To configure the scheduler, map it to the strict-high priority forwarding class, and apply it to interface **shpnode:xe-0/0/10** using the CLI:

1. Specify the scheduler for the strict-high priority queue (**shp-sched**) with a maximum bandwidth of 7 Gbps:

```
[edit class-of-service schedulers]
user@switch# set shp-sched shaping-rate 7g
```

 Copyright © 2018, Juniper Networks, Inc.

2. Configure a scheduler map (**shp-map**) that associates the scheduler (**shp-sched**) with the forwarding class (**strict-high**):

```
[edit class-of-service scheduler-maps]
user@switch# set shp-map forwarding-class strict-high scheduler shp-sched
```

3. Associate the scheduler map **shp-map** with a traffic control profile (**shp-tcp**):

```
[edit class-of-service traffic-control-profiles]
user@switch# set shp-tcp scheduler-map shp-map
```

4. Associate the traffic control profile **shp-tcp** with a forwarding class set (**shp-pg**) and the affected interface (**shpnode:xe-0/0/10**):

```
[edit class-of-service]
user@switch# set interfaces shpnode:xe-0/0/10 forwarding-class-set shp-pg
output-traffic-control-profile shp-tcp
```

Related Documentation

- Understanding CoS Output Queue Schedulers on page 159
- Defining CoS Queue Scheduling Priority on page 176
- Example: Configuring Queue Schedulers on page 169
- Example: Configuring Traffic Control Profiles (Priority Group Scheduling) on page 188
- Example: Configuring Forwarding Class Sets on page 120
- Example: Configuring CoS Hierarchical Port Scheduling (ETS) on page 198

Copyright © 2018, Juniper Networks, Inc.

CHAPTER 6

Using Schedulers (Interconnect Device Fabric)

- Understanding Default CoS Scheduling on QFabric System Interconnect Devices (Junos OS Release 13.1 and Later Releases) on page 265
- Understanding CoS Scheduling Across the QFabric System on page 276
- Example: Configuring CoS Scheduling Across the QFabric System on page 297
- Understanding CoS Fabric Forwarding Class Sets on page 330
- Configuring CoS Fabric Forwarding Class Set Scheduler Maps (Fabric Scheduler to Fabric FC-Set Mapping) on page 341
- Understanding How to Mitigate Fate Sharing on a QFabric System Interconnect Device by Remapping Traffic Flows (Forwarding Classes) on page 343
- Configuring Fate Sharing Mitigation Across the Interconnect Device by Remapping Traffic Flows (Forwarding Classes) on page 366

Understanding Default CoS Scheduling on QFabric System Interconnect Devices (Junos OS Release 13.1 and Later Releases)

The default class-of-service (CoS) properties on the QFabric system Interconnect device interfaces are optimized to best utilize the fabric resources. You cannot configure CoS properties on QFabric System Interconnect device interfaces.

- Hierarchical CoS Architecture Across a QFabric System Interconnect Device on page 265
- Default CoS on Interconnect Device Fabric Interfaces on page 267

Hierarchical CoS Architecture Across a QFabric System Interconnect Device

Because Interconnect devices support traffic from multiple Node devices that have multiple CoS configurations, CoS on Interconnect device fabric interfaces differs from CoS on Node device access and fabric interfaces.

The hierarchical CoS scheduling structure on the Interconnect device interfaces consists of two tiers:

1. Fabric forwarding class sets—Similar to fc-sets on Node devices, fabric fc-sets group traffic for transport across the Interconnect device fabric. Fabric fc-sets are global and apply to all traffic that crosses the fabric from all Node devices. See

"Understanding CoS Fabric Forwarding Class Sets" on page 330 for a detailed description of fabric fc-sets.

2. Class groups—Fabric fc-sets are grouped into class groups for transport across the Interconnect device.

Node devices and Interconnect devices each have a two-tier hierarchical CoS scheduling architecture. The architectures are slightly different, but each tier of the scheduling hierarchy performs analogous functions, as shown in Table 68 on page 266.

Table 68: Hierarchical Scheduler Architecture on Node Devices and Interconnect Devices

Bandwidth Pool	Bandwidth Configuration on Node Devices	Bandwidth Configuration on Interconnect Devices
Port—Entire amount of bandwidth available to traffic on a port.	Access (xe) or fabric (fte) interfaces	Fabric (fte) or Clos fabric (bfte) interfaces
Priority group—Group of traffic types that requires similar CoS treatment. Each priority group receives a portion of the total available port bandwidth.	Forwarding class set (fc-set)	Class group
Priority—Most granular tier of bandwidth allocation. Each priority receives a portion of the total available priority group bandwidth.	Forwarding class (mapped to output queue)	Fabric fc-set (mapped to output queue)

Fabric FC-Sets

Fabric fc-sets are groups of forwarding classes that receive similar CoS treatment across the Interconnect device. Fabric fc-sets are global to the QFabric system and apply to all traffic that traverses the fabric, from all connected Node devices. The CoS on a fabric fc-set applies to all the traffic that belongs to that fabric fc-set.

For example, a fabric fc-set that includes the **best-effort** forwarding class handles all of the **best-effort** traffic from all of the connected Node devices that traverses the Interconnect device fabric.

There are 12 default fabric fc-sets, including 5 visible fabric fc-sets and 7 hidden fabric fc-sets. The five visible fabric fc-sets have forwarding classes mapped to them by default. By default, the seven hidden fabric fc-sets do not carry traffic, but you can map forwarding classes to the hidden fabric fc-sets if you want to use them.

You can configure the forwarding class membership of each fabric fc-set. However, you cannot create new fabric fc-sets, and you cannot delete the 12 default fabric fc-sets.

Each fabric fc-set is mapped to an output queue. Each fabric interface has 12 output queues, one for each of the 12 fabric fc-sets. The traffic from all of the forwarding classes mapped to a fabric fc-set uses that fabric fc-set's output queue.

Fabric fc-sets are grouped into class groups for transport across the Interconnect device.

 Copyright © 2018, Juniper Networks, Inc.

Class Groups for Fabric FC-Sets

To transport traffic across the fabric, the fabric organizes the fabric fc-sets into three classes called *class groups*. Class groups are not user-configurable. The three class groups are:

- **Strict-high priority**—All traffic in the fabric fc-set **fabric_fcset_strict_high**. This class group includes the traffic in **strict-high** priority and **network-control** forwarding classes, and in any forwarding classes you create on a Node device that consist of **strict-high** priority traffic.
- **Unicast**—All traffic in the fabric fc-sets **fabric_fcset_be**, **fabric_fcset_noloss1**, and **fabric_fcset_noloss2**. This class group includes the traffic in the **best-effort**, **fcoe**, and **no-loss** forwarding classes, and the traffic in any forwarding classes you create on a Node device that consist of best-effort or lossless unicast traffic. If you use any of the hidden no loss fabric fc-sets (**fabric_fcset_noloss3**, **fabric_fcset_noloss4**, **fabric_fcset_noloss5**, or **fabric_fcset_noloss6**), that traffic is part of this class group.
- **Multidestination**—All traffic in the fabric fc-set **fabric_fcset_multicast1**. This class group includes the traffic in the **mcast** forwarding class and in any forwarding classes you create on a Node device that consist of multidestination traffic. If you use any of the hidden multidestination fabric fc-sets (**fabric_fcset_multicast2**, **fabric_fcset_multicast3**, or **fabric_fcset_multicast4**), that traffic is part of this class group.

Default CoS on Interconnect Device Fabric Interfaces

The Interconnect device interfaces use the default CoS configuration as described in these sections:

- Default Class Group Scheduling on page 267
- Default Fabric FC-Set Scheduling on page 268
- Default Class Group and Fabric FC-Set Scheduling Example on page 271
- Default PFC and Lossless Transport Across the Interconnect Device on page 272

Default Class Group Scheduling

Default class group bandwidth scheduling is analogous to default fc-set (priority group) scheduling on a Node device. Default class group scheduling uses weighted round-robin (WRR) scheduling, in which each class group receives a portion of the total available fabric interface bandwidth, based on the class group's traffic type, as shown in Table 69 on page 268:

Table 69: Class Group Default Scheduling Properties and Membership

Class Group	Fabric fc-sets	Forwarding Classes (Default Mapping)	Class Group Scheduling Properties (Weight)
Strict-high priority	**fabric_fcset_strict_high**	• All **strict-high** priority forwarding classes • **network-control**	Traffic in the strict-high priority class group is served first. This class group receives all of the bandwidth it needs to empty its queues and therefore can starve other types of traffic during periods of high-volume strict priority traffic. Plan carefully and use caution when determining how much traffic to configure as strict-high priority traffic.
Unicast	• **fabric_fcset_be** • **fabric_fcset_noloss1** • **fabric_fcset_noloss2** Includes the hidden lossless fabric fc-sets if used: • **fabric_fcset_noloss3** • **fabric_fcset_noloss4** • **fabric_fcset_noloss5** • **fabric_fcset_noloss6**	• **best-effort** • **fcoe** • **no-loss** NOTE: No forwarding classes are mapped to the hidden lossless fabric_fcsets by default.	Traffic in the unicast class group receives an 80% weight in the weighted round-robin (WRR) calculations. After the strict-high priority class group has been served, the unicast class group receives 80% of the remaining fabric bandwidth. (If more bandwidth is available, the unicast class group can use more bandwidth.)
Multidestination	**fabric_fcset_multicast1** Includes the hidden multidestination fabric fc-sets if used: • **fabric_fcset_multicast2** • **fabric_fcset_multicast3** • **fabric_fcset_multicast4**	• **mcast** NOTE: No forwarding classes are mapped to the hidden multidestination fabric_fcsets by default.	Traffic in the multidestination class group receives a 20% weight in the WRR calculations. After the strict-high priority class group has been served, the multidestination class group receives 20% of the remaining fabric bandwidth. (If more bandwidth is available, the multidestination class group can use more bandwidth.)

Only the five visible fabric fc-sets have traffic mapped to them by default. The fabric fc-sets within each class group are weighted by their transmit rates (guaranteed minimum bandwidth), and they receive bandwidth from the class group's total bandwidth using weighted round-robin (WRR) scheduling.

Default Fabric FC-Set Scheduling

Default fabric fc-set bandwidth scheduling is analogous to default forwarding class (priority) scheduling on a Node device. Each fabric fc-set receives a guaranteed minimum percentage of the port bandwidth that the class group receives. The guaranteed minimum percentage is called the *transmit rate*.

Table 70 on page 269 shows the default transmit rate for each of the default fabric fc-sets.

Copyright © 2018, Juniper Networks, Inc.

Table 70: Default Fabric FC-Set Scheduler Configuration

Default Fabric FC-Set	Transmit Rate (Percentage of Class Group Bandwidth)
fabric_fcset_strict_high	N/A Strict-high priority traffic is served first, before any other traffic is served. Strict-high priority traffic receives all of the bandwidth it needs to empty its queues and therefore can starve other types of traffic during periods of high-volume strict priority traffic. Plan carefully and use caution when determining how much traffic to configure as strict-high priority traffic.
fabric_fcset_noloss1	35%
fabric_fcset_noloss2	35%
fabric_fcset_be	10%
fabric_fcset_multicast1	20%

Each fabric fc-set belongs to a class group. Each class group receives a portion of the total available port bandwidth. Each fabric fc-set in a class group receives a portion of the total available class group bandwidth based on the transmit rate (weight) of the fabric fc-set.

Traffic in fabric_fcset_strict_high does not have a default transmit rate because fabric_fcset_strict_high receives all of the bandwidth needed to empty its queue before other queues are served. Traffic in the remaining fabric fc-sets receives bandwidth in a ratio proportional to the default transmit rate of each fabric fc-set.

Each of the following hidden fabric fc-sets receives a default scheduling weight of 1:

- fabric_fcset_noloss3
- fabric_fcset_noloss4
- fabric_fcset_noloss5
- fabric_fcset_noloss6
- fabric_fcset_multicast2
- fabric_fcset_multicast3
- fabric_fcset_multicast4

You must explicitly map forwarding classes to hidden fabric fc-sets if you want to use the hidden fabric fc-sets.

CAUTION: **Bandwidth is allocated to fabric fc-sets based on scheduling weight. The scheduling weights of the visible (default) fabric fc-sets are the same as their transmit rates, so in the unicast class group, fabric_fcset_noloss1 and fabric_fcset_noloss2 each have a weight of 35 and fabric_fcset_be has**

a weight of 10. In the multidestination class group, the default fabric_fcset_multicast1 has a weight of 20. The hidden multicast and noloss fabric fc-sets each have a scheduling weight of 1.

The scheduling weights mean that when the visible fabric fc-sets are fully utilizing their allocated bandwidth:

- The hidden noloss fc-sets (fabric_fcset_noloss3, fabric_fcset_noloss4, fabric_fcset_noloss5, and fabric_fcset_noloss6) receive bandwidth at a proportional rate of 1:35 compared to the default noloss fc-sets.
- The hidden multicast fc-sets (fabric_fcset_multicast2, fabric_fcset_multicast3, and fabric_fcset_multicast4) receive bandwidth at a proportional rate of 1:20 compared to the default multicast fc-sets.

If you map traffic to a hidden fabric fc-set, that fabric fc-set receives the proportional amount of class group bandwidth that corresponds to its scheduling weight (1). The amount of bandwidth allocated to a hidden fabric fc-set depends on how much bandwidth the other fc-sets in the same class group consume. When the visible fabric fc-sets fully utilize their bandwidth, hidden fabric fc-sets receive only their minimum weight in bandwidth. (However, even a low scheduling weight results in a relatively large absolute bandwidth allocation because each fabric port is a 40-Gbps port.)

For example, if fabric_fcset_noloss1 and fabric_fcset_noloss2 each consume all of the 35 percent of bandwidth allocated to them, and fabric_fcset_be consumes all of the 10 percent of bandwidth allocated to it, then fabric_fcset_noloss3, fabric_fcset_noloss4, fabric_fcset_noloss5, and fabric_fcset_noloss6 receive bandwidth at a rate of 1:80 compared to the visible noloss fabric fc-sets. (If the visible fabric fc-sets do not use all of their allocated bandwidth, then the hidden fabric fc-sets receive more bandwidth.)

Another example is if we map lossless traffic to fabric_fcset_noloss3 and to fabric_fcset_noloss4. Fabric_fcset_noloss1 uses 10 percent of its 35 percent allocation of unicast class group bandwidth. Fabric_fcset_noloss2 uses 15 percent of its 35 percent allocation of unicast class group bandwidth. Fabric_fcset_be uses 5 percent of its allocated bandwidth. Fabric_fcset_noloss3 and fabric_fcset_noloss4 can use the remaining unicast class group bandwidth allocated to lossless traffic. However, if the traffic on fabric_fcset_noloss1, fabric_fcset_noloss2, or fabric_fcset_be increases, the bandwidth allocated to the hidden fabric fc-sets decreases.

Similarly, if you map traffic to a hidden multidestination fabric fc-set (fabric_fcset_multicast2, fabric_fcset_multicast3, fabric_fcset_multicast4), that multidestination fabric fc-set receives the proportional amount of class group bandwidth that corresponds to its scheduling weight (1). The amount of bandwidth allocated to a hidden multidestination fabric fc-set depends on how much bandwidth the other fc-sets in the multidestination class group consume. When fabric_fcset_multicast1 (the visible fabric fc-set) fully utilizes its bandwidth, hidden fabric fc-sets receive only their minimum weight in

 Copyright © 2018, Juniper Networks, Inc.

bandwidth. For example, if fabric_fcset_multicast1 uses its full bandwidth allocation, then the hidden multidestination fabric fc-sets receive bandwidth at a rate of 1:20 compared to fabric_fcset_multicast1.

Default Class Group and Fabric FC-Set Scheduling Example

The following example shows how default scheduling allocates the total port bandwidth among the class groups and their fabric fc-sets. In the example, traffic is mapped to each of the forwarding classes in the five visible fabric fc-sets, and the strict-high priority class group consumes an average of 10 percent of the 40-Gbps fabric interface bandwidth (4 gigabits), leaving 90 percent of the fabric interface bandwidth (36 gigabits) for the remaining class groups.

In this scenario, by default, the strict-high priority class group includes one fabric fc-set (fabric_fcset_strict_high), the unicast class group includes three fabric fc-sets (fabric_fcset_be, fabric_fcset_noloss1, and fabric_fcset_noloss2), and the multidestination class group includes one fabric fc-set (fabric_fcset_multicast1). Each individual fabric fc-set receives the following treatment:

- Strict-high priority class group (fabric_fcset_strict_high)—This group is assumed to average 10 percent (4 gigabits) for the purposes of this example. Because the strict-high priority class group is served first and receives all of the bandwidth it requires to empty its queue, in real networks the amount of required bandwidth fluctuates and affects the amount of bandwidth available to the other class groups.

  TIP: To prevent strict-high priority traffic from using too much bandwidth, you can set a maximum bandwidth limit by configuring a scheduler shaping rate for the fabric_fcset_strict_high fabric fc-set.

- Unicast class group (fabric_fcset_be, fabric_fcset_noloss1, and fabric_fcset_noloss2)—Each of these fabric fc-sets receives a weighted portion of the 80 percent of the total port bandwidth available after the strict-high traffic has been served. The weight corresponds to the transmit rate of each fabric fc-set. The following calculations show the minimum port bandwidth allocated to each of the unicast class group fabric fc-sets:

  - fabric_fcset_be

    10 / (35 + 35 + 10)% of 80% of the available port bandwidth (12.5 percent of 80 percent of port bandwidth)

    The 10 that is the numerator in 10 / (35 + 35 + 10) is the percentage of bandwidth allocated to the fabric_fcset_be by the transmit rate weight. The (35 + 35 + 10) in the denominator sums the percentage of bandwidth (transmit rate weights) allocated to each of the three fabric fc-sets in the unicast class group.

    The 80 percent represents 80 percent of the port bandwidth available after strict-high priority traffic is served (36 gigabits).

    The resulting equation is:

10 / (35 + 35 + 10)% x (0.8 x 36 gigabits) = approximately 3.6 gigabits

- fabric_fcset_noloss1 and fabric_fcset_noloss2

  The default minimum bandwidth for the two visible lossless fabric fc-sets is the same because both of these fabric fc-sets have the same transmit rate weight.

  35 / (35 + 35 + 10)% of 80% of the port bandwidth (43.75 percent of 80 percent of port bandwidth)

  The 35 that is the numerator in 35 / (35 + 35 + 10) is the percentage of bandwidth allocated to each of the noloss fabric fc-sets by the transmit rate weight. The (35 + 35 + 10) in the denominator sums the percentage of bandwidth (transmit rate weights) allocated to each of the three fabric fc-sets in the unicast class group.

  The 80 percent represents 80 percent of the port bandwidth available after strict-high priority traffic is served (36 gigabits).

  The resulting equation is:

  35 / (35 + 35 + 10)% x (0.8 x 36 gigabits) = approximately 12.6 gigabits

- Multidestination class group (fabric_fcset_multicast1)—Because only one fabric fc-set is configured by default in the multidestination class group, it receives 100 percent of the 20 percent of the total port bandwidth available to the multidestination class group after the strict-high traffic has been served:

  100 / (100)% of 20% of the available port bandwidth (100 percent of 20 percent of available port bandwidth)

  The resulting equation is:

  100 / 100% x (0.2 x 36 gigabits) = approximately 7.2 gigabits

Default PFC and Lossless Transport Across the Interconnect Device

The Interconnect device incorporates flow control mechanisms to support lossless transport during periods of congestion on the fabric. To support the priority-based flow control (PFC) feature on the Node devices, the Interconnect device fabric supports lossless transport for up to six IEEE 802.1p priorities when the following two configuration constraints are met:

1. The IEEE 802.1p priority used for the traffic that requires lossless transport is mapped to a lossless forwarding class (a forwarding class configured with the **no-loss** parameter or the default **fcoe** or **no-loss** forwarding class).

2. The lossless forwarding class must be mapped to one of the lossless fabric fc-sets (**fabric_fcset_noloss1**, **fabric_fcset_noloss2**, **fabric_fcset_noloss3**, **fabric_fcset_noloss4**, **fabric_fcset_noloss5**, or **fabric_fcset_noloss6**). If you do not explicitly map lossless forwarding classes to fabric fc-sets, lossless forwarding classes are mapped by default to lossless fabric fc-sets **fabric_fcset_noloss1** and **fabric_fcset_noloss2**.

When traffic meets these two constraints, the fabric propagates back-pressure from egress queues during periods of congestion. However, to achieve end-to-end lossless

 Copyright © 2018, Juniper Networks, Inc.

transport across the QFabric system, you must also configure a congestion notification profile to enable PFC on the Node device ingress interfaces. To achieve end-to-end lossless transport across the network, you must configure PFC on all of the devices in the lossless traffic path.

For all other combinations of IEEE 802.1p priority to forwarding class mapping and all other combinations of forwarding class to fabric fc-set mapping, the default congestion control mechanism is normal packet drop. For example:

- **Case 1**—If the IEEE 802.1p priority **5** is mapped to the lossless **fcoe** forwarding class, and the **fcoe** forwarding class is mapped to the **fabric_fcset_noloss1** fabric fc-set, then the congestion control mechanism is PFC.
- **Case 2**—If the IEEE 802.1p priority **5** is mapped to the lossless **fcoe** forwarding class, and the **fcoe** forwarding class is mapped to the **fabric_fcset_be** fabric fc-set, then the congestion control mechanism is packet drop, and the traffic does not receive lossless treatment.
- **Case 3**—If the IEEE 802.1p priority **5** is mapped to the lossless **no-loss** forwarding class, and the **no-loss** forwarding class is mapped to the **fabric_fcset_noloss2** fabric fc-set, then the congestion control mechanism is PFC.
- **Case 4**—If the IEEE 802.1p priority **5** is mapped to the lossless **no-loss** forwarding class, and the **no-loss** forwarding class is mapped to the **fabric_fcset_be** fabric fc-set, then the congestion control mechanism is packet drop, and the traffic does not receive lossless treatment.
- **Case 5**—If the IEEE 802.1p priority **5** is mapped to the lossy **best-effort** forwarding class, and the **best-effort** forwarding class is mapped to the **fabric_fcset_be** fabric fc-set, then the congestion control mechanism is packet drop.
- **Case 6**—If the IEEE 802.1p priority **5** is mapped to the lossy **best-effort** forwarding class, and the **best-effort** forwarding class is mapped to the **fabric_fcset_noloss1** fabric fc-set, then the congestion control mechanism is packet drop.

NOTE: Lossless transport across the fabric must also meet the following two conditions:

1. The maximum cable length between the Node device and the Interconnect device is 150 meters of fiber cable.
2. The maximum frame size is 9216 bytes.

If the MTU is 9216 KB, in some cases the QFabric system supports only five lossless forwarding classes instead of six lossless forwarding classes because of headroom buffer limitations.

The number of IEEE 802.1p priorities (forwarding classes) the QFabric system can support for lossless transport across the Interconnect device fabric depends on several factors:

- Approximate fiber cable length—The longer the fiber cable that connects Node device fabric (FTE) ports to the Interconnect device fabric ports, the more data the connected ports need to buffer when a pause is asserted. (The longer the fiber cable, the more frames are traversing the cable when a pause is asserted. Each port must be able to store all of the "in transit" frames in the buffer to preserve lossless behavior and avoid dropping frames.)
- MTU size—The larger the maximum frame sizes the buffer must hold, the fewer frames the buffer can hold. The larger the MTU size, the more buffer space each frame consumes.
- Total number of Node device fabric ports connected to the Interconnect device—The higher the number of connected fabric ports, the more headroom buffer space the Node device needs on those fabric ports to support the lossless flows that traverse the Interconnect device. Because more buffer space is used on the Node device fabric ports, less buffer space is available for the Node device access ports, and a lower total number of lossless flows are supported.

The QFabric system supports six lossless priorities (forwarding classes) under most conditions. The priority group headroom that remains after allocating headroom to lossless flows is sufficient to support best-effort and multidestination traffic.

Table 71 on page 274 shows how many lossless priorities the QFabric system supports under different conditions (fiber cable lengths and MTUs) in cases when the QFabric system supports fewer than six lossless priorities. The number of lossless priorities is the same regardless of how many Node device FTE ports are connected to the Interconnect device. However, the higher the number of FTE ports connected to the Interconnect device, the lower the number of total lossless flows supported. In all cases that are not shown in Table 71 on page 274, the QFabric system supports six lossless priorities.

NOTE: **The system does not perform a configuration commit check that compares available system resources with the number of lossless forwarding classes configured. If you commit a configuration with more lossless forwarding classes than the system resources can support, frames in lossless forwarding classes might be dropped.**

Table 71: Lossless Priority (Forwarding Class) Support for Node Devices When Fewer than Six Lossless Priorities Are Supported

MTU in Bytes	Fiber Cable Length in Meters (Approximate)	Maximum Number of Lossless Priorities (Forwarding Classes) on the Node Device
9216 (9K)	100	5
9216 (9K)	150	5

Copyright © 2018, Juniper Networks, Inc.

NOTE: The total number of lossless flows decreases as resource consumption increases. For a Node device, the higher the number of FTE ports connected to the Interconnect device, the larger the MTU, and the longer the fiber cable length, the fewer total lossless flows the QFabric system can support.

Related Documentation

- Understanding CoS Fabric Forwarding Class Sets on page 330
- Understanding CoS Scheduling on QFabric System Node Device Fabric (fte) Ports on page 149
- Understanding CoS Scheduling Across the QFabric System on page 276

Understanding CoS Scheduling Across the QFabric System

Beginning with Junos OS Release 13.1R2, you can configure two-tier hierarchical scheduling on each Node device fabric interface, and beginning with Junos OS Release 14.1X53-D15, you can configure two-tier hierarchical scheduling on Interconnect device fabric interfaces on a QFabric system. Configuring CoS on the fabric interfaces provides increased control over traffic scheduling across the QFabric system, and helps to ensure predictable bandwidth consumption across the fabric path.

You can configure CoS on the following QFabric system interface types:

- Node device access interfaces (xe interfaces)—Schedule traffic on the output queues of the 10-Gigabit Ethernet access ports using standard Node device CoS scheduling configuration components, as described elsewhere in the QFX Series documentation. You can configure different scheduling for different ports and output queues.
- Node device fabric interfaces (fte interfaces)—Schedule traffic on the output queues of the 40-Gbps fabric interfaces that connect a Node device to a QFX3008-I or a QFX3600-I Interconnect device using standard Node device CoS scheduling configuration components. You can configure different scheduling for different interfaces and output queues.
- Interconnect device fabric interfaces (fte interfaces)—Schedule traffic on the output queues of the 40-Gbps fabric interfaces that connect an Interconnect device to a Node device. Configuring schedulers, mapping schedulers to output queues, and applying scheduling to interfaces on Interconnect devices differ in some aspects from scheduling configuration on Node devices. You can configure different scheduling for different interfaces and fabric forwarding class sets (fabric fc-sets).
- Interconnect device internal Clos fabric interfaces (bfte interfaces)—Schedule traffic on the internal 40-Gbps Clos fabric interfaces that connect the ingress and egress stages of the Interconnect device Clos fabric, using the same scheduling components as the Interconnect device fabric (fte) interfaces. You can configure one Clos fabric interface scheduler, which the system applies to all of the internal Clos fabric interfaces. You cannot configure different schedulers for different Clos fabric interfaces.

Configuring scheduling on Interconnect device fabric interfaces differs from configuring scheduling on Node device interfaces because the Interconnect device is a shared infrastructure that supports traffic from multiple Node devices and CoS configurations.

NOTE: **On Node device access interfaces and fabric, the hierarchical scheduling you configure is the Junos OS implementation of enhanced transmission selection (ETS, described in IEEE 802.1Qaz). On Interconnect device fabric interfaces, the hierarchical scheduling you configure is not an implementation of ETS, although it functions similarly to ETS in that excess port bandwidth is shared.**

Copyright © 2018, Juniper Networks, Inc.

If the 40-Gbps fabric links that connect Node devices to Interconnect devices become oversubscribed, you can configure CoS to control how those fabric links allocate bandwidth to traffic as described in this topic:

- CoS Flow Through the QFabric System on page 277
- Hierarchical Scheduling Architecture on QFabric System Node Devices on page 279
- Default Scheduling on Node Device Fabric Interfaces on page 280
- Hierarchical CoS Architecture Across a QFabric System Interconnect Device on page 280
- Default CoS on Interconnect Device Fabric Interfaces on page 282
- Configuring CoS on Interconnect Device Fabric Interfaces on page 288
- Configuring Scheduling on Node Device Fabric Interfaces on page 295
- Congestion Management on page 296

CoS Flow Through the QFabric System

Figure 13 on page 277 shows the CoS flow across the QFabric system.

Figure 13: QFabric System CoS Flow

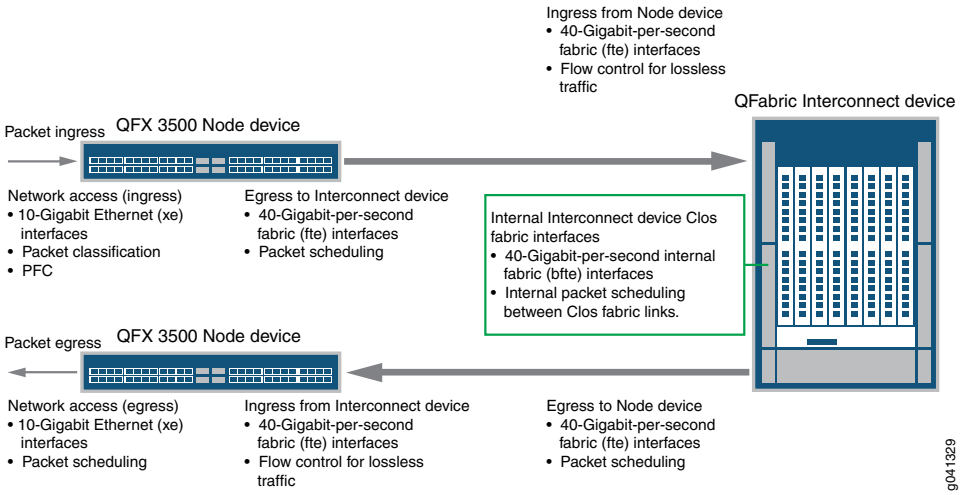

Packets from the access network enter the QFabric system at the ingress interfaces of a QFabric system Node device, cross the Interconnect device fabric, and then are forwarded to their destination through the egress interfaces of another QFabric system Node device.

NOTE: Traffic that uses the same Node device for both traffic ingress and traffic egress does not cross the fabric. CoS for this type of traffic is the same as CoS on a standalone switch.

When a packet enters the QFabric system, it receives CoS treatment at each interface it traverses:

1. A packet enters the QFabric system on a 10-Gigabit Ethernet access interface on a QFabric Node device. At the Node device ingress interface, the packet is classified into a forwarding class, which groups the packet with other traffic that requires similar CoS treatment and maps the packet to the appropriate output queue. To support lossless traffic delivery, enable PFC on the IEEE 802.1p code points of lossless priorities.
2. Next, the packet exits the QFabric Node device on a 40-Gbps fabric interface that is connected to the QFabric Interconnect device. At the Node device egress interface, the packet is placed in the correct output queue and receives the configured (or default) CoS scheduling, which determines the bandwidth and priority allocated to the packet for its journey from the Node device to the Interconnect device.
3. The packet enters the Interconnect device on the 40-Gbps fabric interface connected to the ingress Node device. At the Interconnect device ingress interface, the forwarding class of the packet maps the packet to a fabric fc-set, which groups the packet with other traffic that requires similar CoS treatment and maps the packet to the appropriate output queue. Flow control is applied automatically to traffic in lossless fabric fc-sets to preserve the lossless characteristics of that traffic. (Lossless forwarding classes are mapped to the lossless fabric fc-sets.) Other traffic uses standard packet drop for flow control.
4. The packet progresses from the Interconnect device ingress interface to the internal, three-stage, 40-Gbps Clos fabric interfaces. At the Clos fabric interfaces, packet flow control to protect lossless traffic is applied automatically to traffic in lossless fabric fc-sets. At the egress interfaces from the Clos fabric interfaces, the packet is placed in the correct output queue and receives CoS scheduling.

   NOTE: **If you do not use the default Clos fabric interface scheduling, you can configure one scheduler that is applied to all three of the Clos fabric interfaces.**

5. The packet exits the QFabric Interconnect device on the 40-Gbps fabric interface connected to the egress Node device. At the Interconnect device egress interface, the packet is placed in the correct output queue and receives the configured (or default) CoS scheduling, which determines the bandwidth and priority allocated to the packet for its journey from the Interconnect device egress to the Node device.
6. The packet enters the egress Node device on the 40-Gbps fabric interface connected to the Interconnect device egress interface. At the Node device fabric interface, the packet forwarding class determines the fc-set in which the packet is placed and the output queue the packet uses. Packet flow control to protect lossless traffic is applied automatically to traffic in lossless fabric fc-sets.
7. The packet exits the QFabric system from the egress Node device on a 10-Gigabit Ethernet access interface. At the Node device egress interface, the packet is placed in the correct output queue and receives the configured (or default) CoS scheduling, which determines the bandwidth and priority allocated to the packet for its journey from the Node device to the packet destination.

 Copyright © 2018, Juniper Networks, Inc.

You can use default CoS scheduling or configure CoS scheduling on any or all of the Node device interfaces and on Interconnect device fabric (*fte*) interfaces. If you configure scheduling on one of these interfaces, you can still use default scheduling on other interfaces. Because you configure one scheduler for all of the Interconnect device Clos fabric interfaces (*bfte* interfaces), all of the Clos fabric interfaces either use the configured scheduling or the default scheduling, but not a mix of configured and default scheduling.

NOTE: **To support lossless traffic delivery, you must enable PFC on the IEEE 802.1p code points of lossless priorities (forwarding classes) at the Node device network access ingress interfaces. Flow control is applied to lossless priorities automatically on the fabric (fte and bfte) interfaces.**

Hierarchical Scheduling Architecture on QFabric System Node Devices

CoS architecture on Node device access interfaces is the same as CoS architecture on standalone switch access interfaces. CoS architecture on Node device fabric interfaces is also the same as the CoS architecture on the access interfaces. You apply schedulers to queues (priorities), fc-sets (priority groups), and interfaces in the same hierarchical manner as described in "Understanding CoS Hierarchical Port Scheduling (ETS)" on page 192.

You configure scheduling on Node device fabric interfaces (fte interfaces) using the same statements and configuration constructs that you use to configure scheduling on Node device access interfaces (xe interfaces). For example, on Node device fabric interfaces you can:

- Define up to four fc-sets (three unicast, one multidestination)

  NOTE: **If the interface handles strict-high priority traffic, you must define a separate fc-set (priority group) for strict-high priority traffic. Strict-high priority traffic cannot be mixed with traffic of other priorities in an fc-set. For example, you might choose to create different fc-sets for best effort, lossless, strict-high priority, and multidestination traffic.**

- Map forwarding classes to fc-sets
- Configure scheduling for each forwarding class (scheduler)
- Configure scheduling for each fc-set (traffic control profile)

The only differences in configuring CoS on Node device fabric interfaces compared to configuring CoS on Node device access interfaces are:

- You specify a Node device fabric interface instead of a Node device access interface when you apply CoS to an interface.
- You cannot attach classifiers or congestion notification profiles to fabric interfaces.

Copyright © 2018, Juniper Networks, Inc.

Default Scheduling on Node Device Fabric Interfaces

Default scheduling on Node device fabric interfaces is the same as default scheduling on Node device access interfaces. Only the default forwarding classes (best-effort, network-control, fcoe, no-loss, and multidestination) receive port bandwidth, based on the default minimum guaranteed bandwidth (transmit rate) scheduler settings for each default forwarding class.

All of the default forwarding classes are placed in one default group and receive port bandwidth based on their default transmit rate settings (weights). Forwarding classes that are not default forwarding classes receive no bandwidth.

Each default forwarding class receives a guaranteed minimum percentage of the port bandwidth based on the default transmit rate. Table 72 on page 280 shows the default transmit rate for each of the default forwarding classes.

Table 72: Default Node Device Fabric Interface Forwarding Class Scheduler Configuration

Default Forwarding Classes	Transmit Rate (Percentage of Class Group Bandwidth)
best-effort	5%
fcoe	35%
no-loss	35%
network-control	5%
mcast	20%

Bandwidth is divided among the default forwarding classes in a ratio proportional to the default transmit rate for the forwarding class.

Hierarchical CoS Architecture Across a QFabric System Interconnect Device

Because Interconnect devices support traffic from multiple Node devices that have multiple CoS configurations, configuring CoS on Interconnect device fabric interfaces differs from configuring CoS on Node device access and fabric interfaces.

The hierarchical CoS scheduling structure on the Interconnect device interfaces consists of two tiers:

1. Fabric forwarding class sets—Similar to fc-sets on Node devices, fabric fc-sets group traffic for transport across the Interconnect device fabric. Fabric fc-sets are global and apply to all traffic that crosses the fabric from all Node devices. See "Understanding CoS Fabric Forwarding Class Sets" on page 330 for a detailed description of fabric fc-sets.
2. Class groups—Fabric fc-sets are grouped into class groups for transport across the Interconnect device.

 Copyright © 2018, Juniper Networks, Inc.

Node devices and Interconnect devices each have a two-tier hierarchical CoS scheduling architecture. The architectures are slightly different, but each scheduling tier performs analogous functions, as shown in Table 68 on page 266.

Table 73: Bandwidth Scheduler Architecture on Node Devices and Interconnect Devices

Bandwidth Allocation Pool	Node Devices	Interconnect Devices
Port—Entire amount of bandwidth available to traffic on a port.	Access (xe) or fabric (fte) interfaces	Fabric (fte) or Clos fabric (bfte) interfaces
Priority group—Group of traffic types that requires similar CoS treatment. Each priority group receives a portion of the total available port bandwidth.	Forwarding class set (fc-set)	Class group
Priority—Most granular tier of bandwidth allocation. Each priority receives a portion of the total available priority group bandwidth.	Forwarding class (mapped to output queue)	Fabric fc-set (mapped to output queue)

Fabric FC-Sets

Fabric fc-sets are groups of forwarding classes that receive similar CoS treatment across the Interconnect device. Fabric fc-sets are global to the QFabric system and apply to all traffic that traverses the fabric, from all connected Node devices. The CoS you configure on a fabric fc-set applies to all the traffic that belongs to that fabric fc-set.

For example, a fabric fc-set that includes the **best-effort** forwarding class handles all of the **best-effort** traffic from all of the connected Node devices that traverses the Interconnect device fabric.

There are 12 default fabric fc-sets, including five visible fabric fc-sets and seven hidden fabric fc-sets. The five visible fabric fc-sets have forwarding classes mapped to them by default. By default, the seven hidden fabric fc-sets do not carry traffic, but you can map forwarding classes to the hidden fabric fc-sets if you want to use them.

You can configure the forwarding class membership of each fabric fc-set, and you can configure CoS for each fabric fc-set. However, you cannot create new fabric fc-sets, and you cannot delete the 12 default fabric fc-sets.

Each fabric fc-set is mapped to an output queue. Each fabric interface has 12 output queues, one for each of the 12 fabric fc-sets. The traffic from all of the forwarding classes mapped to a fabric fc-set uses that fabric fc-set's output queue.

Fabric fc-sets are grouped into class groups for transport across the Interconnect device.

Class Groups for Fabric FC-Sets

To transport traffic across the fabric, the QFabric system organizes the fabric fc-sets into three default classes called *class groups*. Class groups are not user-configurable. The three class groups are:

- **Strict-high priority**—All traffic in the fabric fc-set **fabric_fcset_strict_high**. This class group includes the traffic in **strict-high** priority and **network-control** forwarding classes and in any forwarding classes you create on a Node device that consist of **strict-high** priority or **network-control** forwarding class traffic.
- **Unicast**—All traffic in the fabric fc-sets **fabric_fcset_be**, **fabric_fcset_noloss1**, and **fabric_fcset_noloss2**. This class group includes the traffic in the **best-effort**, **fcoe**, and **no-loss** forwarding classes, and the traffic in any forwarding classes you create on a Node device that consist of best-effort or lossless traffic. If you use any of the hidden no loss fabric fc-sets (**fabric_fcset_noloss3**, **fabric_fcset_noloss4**, **fabric_fcset_noloss5**, or **fabric_fcset_noloss6**), that traffic is part of this class group.
- **Multidestination**—All traffic in the fabric fc-set **fabric_fcset_multicast1**. This class group includes the traffic in the **mcast** forwarding class and in any forwarding classes you create on a Node device that consist of multidestination traffic. If you use any of the hidden multidestination fabric fc-sets (**fabric_fcset_multicast2**, **fabric_fcset_multicast3**, or **fabric_fcset_multicast4**), that traffic is part of this class group.

Default CoS on Interconnect Device Fabric Interfaces

If you do not configure CoS on the Interconnect device fabric interfaces, the Interconnect device interfaces use the default CoS configuration as described in this section:

- Default Class Group Scheduling on page 282
- Default Fabric FC-Set Bandwidth Scheduling on page 283
- Default Class Group and Fabric FC-Set Scheduling Example on page 284
- Default PFC and Lossless Transport Across the Interconnect Device on page 286

Default Class Group Scheduling

Default class group bandwidth scheduling is analogous to default fc-set (priority group) scheduling on a Node device. Default class group scheduling uses weighted round-robin (WRR) scheduling, in which each class group receives a portion of the total available fabric interface bandwidth, based on the class group's traffic type, as shown in Table 69 on page 268:

Table 74: Class Group Default Scheduling Properties and Membership

Class Group	Fabric fc-sets	Forwarding Classes (Default Mapping)	Class Group Scheduling Properties (Weight)
Strict-high priority	**fabric_fcset_strict_high**	• All **strict-high** priority forwarding classes • **network-control**	Traffic in the strict-high priority class group is served first. This class group receives all of the bandwidth it needs to empty its queues and therefore can starve other types of traffic during periods of high-volume strict priority traffic. Plan carefully and use caution when determining how much traffic to configure as strict-high priority traffic.

Copyright © 2018, Juniper Networks, Inc.

Table 74: Class Group Default Scheduling Properties and Membership (continued)

Class Group	Fabric fc-sets	Forwarding Classes (Default Mapping)	Class Group Scheduling Properties (Weight)
Unicast	• **fabric_fcset_be** • **fabric_fcset_noloss1** • **fabric_fcset_noloss2** Includes the hidden lossless fabric fc-sets if used: • **fabric_fcset_noloss3** • **fabric_fcset_noloss4** • **fabric_fcset_noloss5** • **fabric_fcset_noloss6**	• **best-effort** • **fcoe** • **no-loss** NOTE: No forwarding classes are mapped to the hidden lossless fabric_fcsets by default.	Traffic in the unicast class group receives an 80% weight in the weighted round-robin (WRR) calculations. After the strict-high priority class group has been served, the unicast class group receives 80% of the remaining fabric bandwidth. (If more bandwidth is available, the unicast class group can use more bandwidth.)
Multidestination	**fabric_fcset_multicast1** Includes the hidden multidestination fabric fc-sets if used: • **fabric_fcset_multicast2** • **fabric_fcset_multicast3** • **fabric_fcset_multicast4**	• **mcast** NOTE: No forwarding classes are mapped to the hidden multidestination fabric_fcsets by default.	Traffic in the multidestination class group receives a 20% weight in the WRR calculations. After the strict-high priority class group has been served, the multidestination class group receives 20% of the remaining fabric bandwidth. (If more bandwidth is available, the multidestination class group can use more bandwidth.)

If you use the default fabric CoS configuration, only the five visible fabric fc-sets have traffic mapped to them by default. The fabric fc-sets within each class group are weighted by their transmit rates (guaranteed minimum bandwidth), and they receive bandwidth from the class group's total bandwidth using weighted round-robin (WRR) scheduling.

Default Fabric FC-Set Bandwidth Scheduling

Default fabric fc-set bandwidth scheduling is analogous to default forwarding class (priority) scheduling on a Node device. Each fabric fc-set receives a guaranteed minimum percentage of the port bandwidth that the class group receives. The guaranteed minimum percentage is called the *transmit rate*.

Table 70 on page 269 shows the default transmit rate for each of the default fabric fc-sets.

Table 75: Default Fabric FC-Set Scheduler Configuration

Default Fabric FC-Set	Transmit Rate (Percentage of Class Group Bandwidth)
fabric_fcset_strict_high	0%
fabric_fcset_noloss1	35%
fabric_fcset_noloss2	35%
fabric_fcset_be	10%

Table 75: Default Fabric FC-Set Scheduler Configuration (continued)

Default Fabric FC-Set	Transmit Rate (Percentage of Class Group Bandwidth)
fabric_fcset_multicast1	20%

Each fabric fc-set belongs to a class group. Each class group receives a portion of the total available port bandwidth. Each fabric fc-set in a class group receives a portion of the total available class group bandwidth based on the transmit rate (weight) of the fabric fc-set.

Traffic in fabric_fcset_strict_high does not have a default transmit rate because fabric_fcset_strict_high receives all of the bandwidth needed to empty its queue before other queues are served. Traffic in the remaining fabric fc-sets receive bandwidth in a ratio proportional to the default transmit rate of each fabric fc-set.

Each of the following hidden fabric fc-sets receives a default scheduling weight of 1 if you do not configure CoS scheduling for it:

- fabric_fcset_noloss3
- fabric_fcset_noloss4
- fabric_fcset_noloss5
- fabric_fcset_noloss6
- fabric_fcset_multicast2
- fabric_fcset_multicast3
- fabric_fcset_multicast4

You must explicitly map forwarding classes to hidden fabric fc-sets and configure scheduling for that traffic if you want to use the hidden fabric fc-sets. Default scheduling does not use the hidden fabric fc-sets.

Default Class Group and Fabric FC-Set Scheduling Example

The following example shows how default scheduling allocates the total port bandwidth among the class groups and fabric fc-sets. The example assumes that traffic is mapped to each of the forwarding classes in the five visible fabric fc-sets, and that the strict-high priority class group consumes an average of 10 percent of the 40-Gbps fabric interface bandwidth (4 gigabits), leaving 90 percent of the fabric interface bandwidth (36 gigabits) for the remaining class groups.

In this scenario, by default, the strict-high priority class group includes one fabric fc-set (fabric_fcset_strict_high), the unicast class group includes three fabric fc-sets (fabric_fcset_be, fabric_fcset_noloss1, and fabric_fcset_noloss2) and the multidestination class group includes one fabric fc-set (fabric_fcset_multicast1). Each individual fabric fc-set receives the following treatment:

- Strict-high priority class group (fabric_fcset_strict_high)—Assumed to average 10 percent (4 gigabits) for the purposes of this example. Because the strict-high priority

Copyright © 2018, Juniper Networks, Inc.

class group is served first and receives all of the bandwidth it requires to empty its queue, in real networks the amount of required bandwidth fluctuates and affects the amount of bandwidth available to the other class groups.

TIP: **To prevent strict-high priority traffic from using too much bandwidth, you can set a maximum bandwidth limit by configuring a scheduler shaping rate for the fabric_fcset_strict_high fabric fc-set.**

- Unicast class group (fabric_fcset_be, fabric_fcset_noloss1, and fabric_fcset_noloss2)—Each of these fabric fc-sets receives a weighted portion of the 80 percent of the total port bandwidth available to the unicast class group after the strict-high traffic has been served. The weight corresponds to the transmit rate of each fabric fc-set. The following calculations show the minimum port bandwidth allocated to each of the unicast class group fabric fc-sets:
  - fabric_fcset_be

    10/(35+35+10)% of 80% of the available port bandwidth (12.5% of 80% of port bandwidth)

    The 10 that is the numerator in 10/(35+35+10) is the percentage of bandwidth allocated to the fabric_fcset_be by the transmit rate weight. The (35+35+10) in the denominator sums the percentage of bandwidth (transmit rate weights) allocated to each of the three fabric fc-sets in the unicast class group.

    The 80 percent represents 80 percent of the port bandwidth available after serving strict-high priority traffic (36 gigabits).

    The resulting equation is:

    10/(35+35+10)% x (0.8 x 36 gigabits) = approximately 3.6 gigabits
  - fabric_fcset_noloss1 and fabric_fcset_noloss2

    The default minimum bandwidth for the two visible lossless fabric fc-sets is the same because both of these fabric fc-sets have the same transmit rate weight.

    35/(35+35+10)% of 80% of the port bandwidth (43.75% of 80% of port bandwidth)

    The 35 that is the numerator in 35/(35+35+10) is the percentage of bandwidth allocated to each of the noloss fabric fc-sets by the transmit rate weight. The (35+35+10) in the denominator sums the percentage of bandwidth (transmit rate weights) allocated to each of the three fabric fc-sets in the unicast class group.

    The 80 percent represents 80 percent of the port bandwidth available after serving strict-high priority traffic (36 gigabits).

    The resulting equation is:

    35/(35+35+10)% x (0.8 x 36 gigabits) = approximately 12.6 gigabits
- Multidestination class group (fabric_fcset_multicast1)—Because only one fabric fc-set is configured by default in the multidestination class group, it receives 100 percent of the 20 percent of the total port bandwidth available to the multidestination class group after the strict-high traffic has been served:

100/(100)% of 20% of the available port bandwidth (100% of 20% of available port bandwidth)

The resulting equation is:

100/100% x (0.2 x 36 gigabits) = approximately 7.2 gigabits

Default PFC and Lossless Transport Across the Interconnect Device

The Interconnect device incorporates flow control mechanisms to support lossless transport during periods of congestion on the fabric. To support the priority-based flow control (PFC) feature on the Node devices, the Interconnect device fabric supports lossless transport for up to six IEEE 802.1p priorities when the following two configuration constraints are met:

1. The IEEE 802.1p priority used for the traffic that requires lossless transport is mapped to a lossless forwarding class (a forwarding class configured with the **no-loss** parameter or the default **fcoe** or **no-loss** forwarding class).

2. The lossless forwarding class must be mapped to one of the lossless fabric fc-sets (**fabric_fcset_noloss1**, **fabric_fcset_noloss2**, **fabric_fcset_noloss3**, **fabric_fcset_noloss4**, **fabric_fcset_noloss5**, or **fabric_fcset_noloss6**). If you do not explicitly map lossless forwarding classes to fabric fc-sets, lossless forwarding classes are mapped by default to lossless fabric fc-sets **fabric_fcset_noloss1** and **fabric_fcset_noloss2**.

When traffic meets these two constraints, the fabric propagates back-pressure from egress queues during periods of congestion. However, to achieve end-to-end lossless transport across the QFabric system, you must also configure a congestion notification profile to enable PFC on the Node device ingress interfaces. To achieve end-to-end lossless transport across the network, you must configure PFC on all of the devices in the lossless traffic path.

For all other combinations of IEEE 802.1p priority to forwarding class mapping and all other combinations of forwarding class to fabric fc-set mapping, the default congestion control mechanism is normal packet drop. For example:

- **Case 1**—If the IEEE 802.1p priority **5** is mapped to the lossless **fcoe** forwarding class, and the **fcoe** forwarding class is mapped to the **fabric_fcset_noloss1** fabric fc-set, then the congestion control mechanism is PFC.
- **Case 2**—If the IEEE 802.1p priority **5** is mapped to the lossless **fcoe** forwarding class, and the **fcoe** forwarding class is mapped to the **fabric_fcset_be** fabric fc-set, then the congestion control mechanism is packet drop, and the traffic does not receive lossless treatment.
- **Case 3**—If the IEEE 802.1p priority **5** is mapped to the lossless **no-loss** forwarding class, and the **no-loss** forwarding class is mapped to the **fabric_fcset_noloss2** fabric fc-set, then the congestion control mechanism is PFC.
- **Case 4**—If the IEEE 802.1p priority **5** is mapped to the lossless **no-loss** forwarding class, and the **no-loss** forwarding class is mapped to the **fabric_fcset_be** fabric fc-set, then

 Copyright © 2018, Juniper Networks, Inc.

the congestion control mechanism is packet drop, and the traffic does not receive lossless treatment.

- **Case 5**—If the IEEE 802.1p priority **5** is mapped to the lossy **best-effort** forwarding class, and the **best-effort** forwarding class is mapped to the **fabric_fcset_be** fabric fc-set, then the congestion control mechanism is packet drop.
- **Case 6**—If the IEEE 802.1p priority **5** is mapped to the lossy **best-effort** forwarding class, and the **best-effort** forwarding class is mapped to the **fabric_fcset_noloss1** fabric fc-set, then the congestion control mechanism is packet drop.

NOTE: Lossless transport across the fabric must also meet the following two conditions:

1. The maximum cable length between the Node device and the Interconnect device is 150 meters of fiber cable.
2. The maximum frame size is 9216 bytes.

If the MTU is 9216 KB, in some cases the QFabric system supports only five lossless forwarding classes instead of six lossless forwarding classes because of headroom buffer limitations.

The number of IEEE 802.1p priorities (forwarding classes) the QFabric system can support for lossless transport across the Interconnect device fabric depends on several factors:

- Approximate fiber cable length—The longer the fiber cable that connects Node device fabric (FTE) ports to the Interconnect device fabric ports, the more data the connected ports need to buffer when a pause is asserted. (The longer the fiber cable, the more frames are traversing the cable when a pause is asserted. Each port must be able to store all of the “in transit” frames in the buffer to preserve lossless behavior and avoid dropping frames.)
- MTU size—The larger the maximum frame sizes the buffer must hold, the fewer frames the buffer can hold. The larger the MTU size, the more buffer space each frame consumes.
- Total number of Node device fabric ports connected to the Interconnect device—The higher the number of connected fabric ports, the more headroom buffer space the Node device needs on those fabric ports to support the lossless flows that traverse the Interconnect device. Because more buffer space is used on the Node device fabric ports, less buffer space is available for the Node device access ports, and a lower total number of lossless flows are supported.

The QFabric system supports six lossless priorities (forwarding classes) under most conditions. The priority group headroom that remains after allocating headroom to lossless flows is sufficient to support best-effort and multidestination traffic.

Table 71 on page 274 shows how many lossless priorities the QFabric system supports under different conditions (fiber cable lengths and MTUs) in cases when the QFabric

system supports fewer than six lossless priorities. The number of lossless priorities is the same regardless of how many Node device FTE ports are connected to the Interconnect device. However, the higher the number of FTE ports connected to the Interconnect device, the lower the number of total lossless flows supported. In all cases that are not shown in Table 71 on page 274, the QFabric system supports six lossless priorities.

NOTE: The system does not perform a configuration commit check that compares available system resources with the number of lossless forwarding classes configured. If you commit a configuration with more lossless forwarding classes than the system resources can support, frames in lossless forwarding classes might be dropped.

Table 76: Lossless Priority (Forwarding Class) Support for Node Devices When Fewer than Six Lossless Priorities Are Supported

MTU in Bytes	Fiber Cable Length in Meters (Approximate)	Maximum Number of Lossless Priorities (Forwarding Classes) on the Node Device
9216 (9K)	100	5
9216 (9K)	150	5

NOTE: The total number of lossless flows decreases as resource consumption increases. For a Node device, the higher the number of FTE ports connected to the Interconnect device, the larger the MTU, and the longer the fiber cable length, the fewer total lossless flows the QFabric system can support.

Configuring CoS on Interconnect Device Fabric Interfaces

If you do not want to use default CoS scheduling across the Interconnect device fabric, you can configure two-tier hierarchical scheduling on the external 40-Gbps fabric interfaces (fte interfaces) and on the internal 40-Gbps Clos fabric interfaces (bfte interfaces).

This section describes:

- Similarities Between Node Device Scheduling and Interconnect Device Scheduling on page 289
- Differences Between Node Device and Interconnect Device Hierarchical Scheduling on page 289
- Hierarchical Scheduling Configuration Components on page 291
- Hierarchical Scheduling Bandwidth Allocation on page 291
- Interconnect Device Hierarchical Scheduling (Class Group and Fabric FC-Set) Example on page 292

 Copyright © 2018, Juniper Networks, Inc.

Similarities Between Node Device Scheduling and Interconnect Device Scheduling

Configuring two-tier hierarchical scheduling on Interconnect device fabric interfaces follows the same general process as configuring scheduling on Node device interfaces, in that you perform the following actions in both cases:

- Define drop profiles to control packet loss for lossy traffic; do not use drop profiles on lossless traffic or multidestination traffic. (However, if you configure a drop profile on lossless traffic or on multidestination traffic, the system does not return a commit error.)
- Define schedulers to configure the bandwidth for different types of traffic.
- Map schedulers to output queues (by mapping schedulers to forwarding classes on Node devices, and by mapping schedulers to fabric fc-sets on Interconnect devices).
- Associate hierarchical scheduling with interfaces to apply scheduling to traffic on those interfaces.

Another similarity is that you cannot configure classifiers or congestion notification profiles (to enable PFC) on fabric interfaces. Flow control is applied automatically to lossless queues on fabric interfaces, and packet classification occurs at the Node device ingress interface.

Differences Between Node Device and Interconnect Device Hierarchical Scheduling

Configuring the two-tier scheduling hierarchy on Interconnect device fabric interfaces is different in several important ways than configuring the two-tier scheduling hierarchy on Node device interfaces, as shown in Table 77 on page 289:

Table 77: Node Device and Interconnect Device Hierarchical Scheduling Differences

Hierarchical Scheduling Component	Node Devices	Interconnect Devices
Priority scheduling hierarchy tier	• Each forwarding class is mapped to an output queue. Classifiers map forwarding classes to priorities (IEEE 802.1p code points). • You map schedulers to forwarding classes to provide scheduling for priorities. • You can create and delete forwarding classes.	• Each fabric fc-set is mapped to an output queue, and is mapped internally to priorities (IEEE 802.1p code points). • You map schedulers to fabric fc-sets to provide scheduling for priorities. • You cannot create or delete fabric fc-sets. Only the 12 default fabric fc-sets are available (but you can change the default mapping of forwarding classes to fabric fc-sets).
Scheduler mapping to priorities (bandwidth allocation to priorities)	The **scheduler-maps** statement maps a forwarding class to a scheduler.	The **scheduler-map-forwarding-class-sets** statement maps a fabric fc-set to a scheduler.

Table 77: Node Device and Interconnect Device Hierarchical Scheduling Differences (continued)

Hierarchical Scheduling Component	Node Devices	Interconnect Devices
Priority group scheduling hierarchy tier	• Each fc-set represents a priority group. • You associate fc-sets with traffic control profiles to provide scheduling for priority groups. • You can create and delete fc-sets.	• Each class group represents a priority group. • You cannot change the types of traffic associated with a class set (each class set is dedicated to one type of traffic: strict-high priority, unicast, or multidestination traffic). • You cannot create or delete class groups.
Priority group bandwidth allocation method	You create traffic control profiles to determine the port scheduling resources assigned to priority groups (fc-sets).	You do not configure priority group (class group) scheduling using a traffic control profile. Instead, the QFabric system uses the sum of the fabric fc-set minimum guaranteed bandwidths (transmit rates) to determine the port scheduling resources for the class group, as described in "Hierarchical Scheduling Bandwidth Allocation" on page 291 later in this topic.
Scheduler transmit rate, shaping rate, and drop priority parameters	• Transmit rate and shaping rate—You can specify either a percentage value or an absolute value for these two parameters. • Priority—Scheduling for forwarding classes includes the priority parameter, which sets the scheduling drop priority as either low or strict-high.	• Transmit rate and shaping rate—You can only specify a percentage value for these two parameters; you cannot specify an absolute value. • Priority—You cannot specify the priority parameter because the class groups automatically determine the drop priority. If you try to map a scheduler that includes a priority setting to a fabric fc-set, the system generates a commit error.
Hierarchical scheduler association with interfaces	Specify an access interface or a Node device fabric interface and associate it with an fc-set (determines which forwarding classes use the interface) and a traffic control profile (determines scheduling for both the priority group and the priorities in the priority group).	Specify an Interconnect device fabric interface and associate it with a fabric forwarding class set scheduler map. The fabric forwarding class set scheduler map determines the fabric fc-sets associated with the interface and their scheduling properties. You can associate one fabric forwarding class scheduler map with an interface. Different interfaces can have different fabric forwarding class scheduler maps.
Classifiers and congestion notification profiles (enabling PFC on priorities)	You can attach classifiers and congestion notification profiles to access interfaces (although you cannot attach them to fabric interfaces).	You cannot attach classifiers and congestion notification profiles to fabric interfaces.

NOTE: **Because the queue scheduler transmit rate is used differently on Node devices and Interconnect devices, and because you cannot specify the scheduler priority parameter on Interconnect devices, you should configure different schedulers for Node device interfaces and Interconnect device interfaces.**

Copyright © 2018, Juniper Networks, Inc.

Hierarchical Scheduling Configuration Components

Some of the configuration components used for Interconnect device CoS scheduling are similar to the CoS configuration components used for Node device CoS scheduling, but some of the components are different because configuring the two-tier scheduling hierarchy differs in some respects on the two devices. Figure 14 on page 291 shows a block diagram of the components used to configure hierarchical scheduling on the Interconnect device.

Figure 14: Configuration Components of Interconnect Device Hierarchical Scheduling

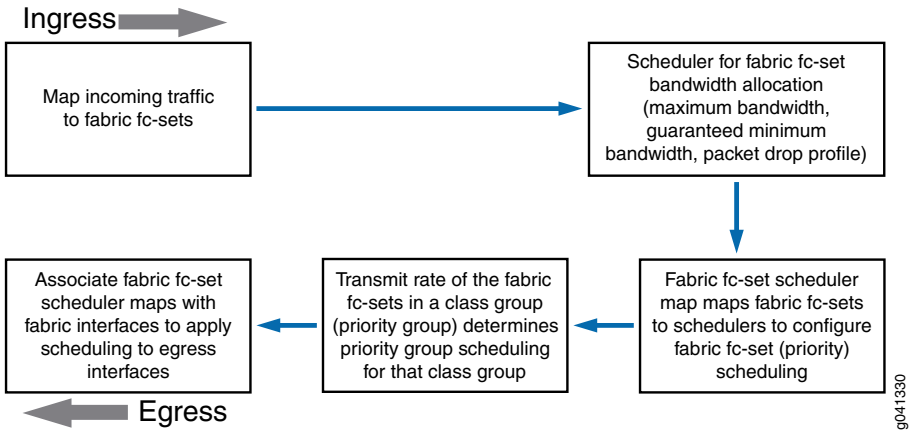

Hierarchical Scheduling Bandwidth Allocation

The purpose of hierarchical scheduling is to allocate the available port bandwidth to class groups (priority groups), and then to allocate class group bandwidth to the fabric fc-sets (priorities) that belong to the class group. Hierarchical scheduling provides better port bandwidth utilization and greater flexibility to allocate port resources to queues (priorities) and to groups of queues (priority groups) than flat scheduling.

NOTE: **Available port bandwidth is the bandwidth that remains after the port services all of its strict-high priority traffic.**

You allocate bandwidth to priorities by configuring scheduling for fabric fc-sets. For each fabric fc-set, you can configure a scheduler that defines the guaranteed minimum bandwidth (transmit rate), the maximum bandwidth (shaping rate), and the packet drop profile for lossy unicast traffic assigned to that fabric fc-set. (Lossless fabric fc-sets use flow control to prevent packet loss and do not use drop profiles; multidestination traffic does not use drop profiles.)

Bandwidth is allocated to priority groups (class groups) automatically, based on the minimum guaranteed bandwidth (transmit rate) of the fabric fc-sets that belong to the class group. The sum of the transmit rates of the fabric fc-sets in a class group equals the total minimum guaranteed port bandwidth of that class group.

Copyright © 2018, Juniper Networks, Inc.

So the QFabric system uses the fabric fc-set transmit in two ways to calculate bandwidth allocation:

1. The transmit rate of a fabric fc-set sets the minimum guaranteed bandwidth allocated to that fabric fc-set from the class group bandwidth pool.
2. The sum of the fabric fc-set transmit rates in a class group sets the minimum guaranteed port bandwidth allocated to that class group.

The transmit rate percentage that you configure in a fabric fc-set scheduler does not necessarily equal the minimum percentage of available port bandwidth allocated to that fabric fc-set, because port bandwidth is allocated to strict-high priority traffic first, and only the remaining port bandwidth is allocated to the rest of the traffic based on the fabric fc-set transmit rates. In other words, the bandwidth available to a class group after the system services strict-high priority traffic is divided among the fabric fc-sets in that class group in proportion to the transmit rate configured for each fabric fc-set.

Hierarchical scheduling on fabric interfaces allocates guaranteed minimum port bandwidth in the following manner:

1. The sum of the transmit rates of the fabric fc-sets in a class group determines the amount of available port bandwidth allocated to the class group. For example, a class group that has three fabric fc-sets with transmit rates of 10 percent, 20 percent, and 30 percent, receives 60 percent of the available port bandwidth (10+20+30 = 60).
2. The fabric fc-set transmit rate is used again to determine the proportion of class group bandwidth allocated to the fabric fc-set. For example, in a class group with three fabric fc-sets that have transmit rates of 10 percent, 20 percent, and 30 percent (class group receives 60 percent of available port bandwidth), the fabric fc-set with a transmit rate of 20 percent receives one-third of the class group bandwidth (20 is one-third of 60).

   It is important to understand that this is not one-third of the total available port bandwidth, but one-third of the 60 percent of total available port bandwidth that the class group receives.

NOTE: **The sum of the transmit rates of all of the fabric fc-sets in the unicast and the multidestination class groups cannot exceed 100 percent. (You cannot configure the system to schedule more than 100 percent as the minimum guaranteed bandwidth for all of the unicast and multidestination fabric fc-sets. The sum of the transmit rates of all unicast and multidestination fabric fc-sets must be less than or equal to 100 percent.)**

Interconnect Device Hierarchical Scheduling (Class Group and Fabric FC-Set) Example

The following example shows how configuring hierarchical scheduling allocates the total port bandwidth among the class groups and fabric fc-sets. The example shows a configuration in which:

Copyright © 2018, Juniper Networks, Inc.

- The strict-high priority class group has no scheduler (transmit rate of fabric_fcset_strict_high is 0 percent and no maximum bandwidth is set, so the strict-high priority traffic can use as much bandwidth as needed).
- The unicast class group consists of the following three fabric fc-sets and transmit rates:
  - fabric_fcset_be, 25 percent
  - fabric_fcset_noloss1, 15 percent
  - fabric_fcset_noloss2, 20 percent
- The multidestination class group consists of the following two fabric fc-sets and transmit rates:
  - fabric_fcset_multicast1, 10 percent
  - fabric_fcset_multicast2, 30 percent

Total available port bandwidth (port bandwidth remaining after serving strict-high priority traffic) is divided between the unicast and multidestination class groups:

- Unicast class group—Contains three fabric fc-sets (fabric_fcset_be, fabric_fcset_noloss1, and fabric_fcset_noloss2) with a combined transmit rate of 60 percent (25+15+ 20). Therefore, the unicast class group receives 60 percent of the total available port bandwidth.
- Multidestination class group—Contains two fabric fc-sets (fabric_fcset_multicast1 and fabric_fcset_multicast2) with a combined transmit rate of 40 percent (10+30). Therefore, the multidestination class group receives 40 percent of the total available port bandwidth.

The class group bandwidth is divided among the fabric fc-sets based on the transmit rate of each fabric fc-set in relation to the class group bandwidth.

The unicast class group bandwidth is divided among its three fabric fc-sets:

- fabric_fcset_be

  25/(15+20+25) percent of 60 percent of the available port bandwidth (41.6 percent of 60 perecent of available port bandwidth)

  The 25 that is the numerator in 25/(15+20+25) is the percentage of bandwidth allocated to the fabric_fcset_be by the transmit rate weight. The (15+20+25) in the denominator sums the percentage of bandwidth (transmit rate weights) allocated to each of the three fabric fc-sets in the unicast class group.

  The 60 percent represents 60 percent of the port bandwidth available after serving strict-high priority traffic. If no strict-high priority traffic is on the system, the equation results in the following bandwidth allocation to the fabric_fcset_be:

  25/(15+20+25) percent x (0.6 x 40 gigabits) = approximately 9.98 gigabits

- fabric_fcset_noloss1

15/(15+20+25) percent of 60 percent of the available port bandwidth (25 percent of 60 percent of available port bandwidth)

The 15 that is the numerator in 15/(15+20+25) is the percentage of bandwidth allocated to the fabric_fcset_noloss1 by the transmit rate weight. The (15+20+25) in the denominator sums the percentage of bandwidth (transmit rate weights) allocated to each of the three fabric fc-sets in the unicast class group.

The 60 percent represents 60 percent of the port bandwidth available after serving strict-high priority traffic. If no strict-high priority traffic is on the system, the equation results in the following bandwidth allocation to the fabric_fcset_noloss1:

15/(15+20+25) percent x (0.6 x 40 gigabits) = approximately 6 gigabits

- fabric_fcset_noloss2

  20/(15+20+25) percent of 60 percent of the available port bandwidth (33.3 percent of 60 percent of available port bandwidth)

  The 20 that is the numerator in 20/(15+20+25) is the percentage of bandwidth allocated to the fabric_fcset_noloss2 by the transmit rate weight. The (15+20+25) in the denominator sums the percentage of bandwidth (transmit rate weights) allocated to each of the three fabric fc-sets in the unicast class group.

  The 60 percent represents 60 percent of the port bandwidth available after serving strict-high priority traffic. If no strict-high priority traffic is on the system, the equation results in the following bandwidth allocation to the fabric_fcset_noloss2:

  20/(15+20+25) percent x (0.6 x 40 gigabits) = approximately 7.99 gigabits

The multidestination class group bandwidth is divided among its two fabric fc-sets:

- fabric_fcset_multicast1

  10/(10+30) percent of 40 percent of the available port bandwidth (25 percent of 40 percent of available port bandwidth)

  The 10 that is the numerator in 10/(10+30) is the percentage of bandwidth allocated to the fabric_fcset_multicast1 by the transmit rate weight. The (10+30) in the denominator sums the percentage of bandwidth (transmit rate weights) allocated to each of the two fabric fc-sets in the multidestination class group.

  The 40 percent represents 40 percent of the port bandwidth available after serving strict-high priority traffic. If no strict-high priority traffic is on the system, the equation results in the following bandwidth allocation to the fabric_fcset_multicast1:

  10/(10+30) percent x (0.4 x 40 gigabits) = approximately 4 gigabits

- fabric_fcset_multicast2

  30/(10+30) percent of 40 percent of the available port bandwidth (75 percent of 40 percent of available port bandwidth)

  The 30 that is the numerator in 30/(10+30) is the percentage of bandwidth allocated to the fabric_fcset_multicast2 by the transmit rate weight. The (10+30) in the denominator sums the percentage of bandwidth (transmit rate weights) allocated to each of the two fabric fc-sets in the multidestination class group.

 Copyright © 2018, Juniper Networks, Inc.

The 40 percent represents 40 percent of the port bandwidth available after serving strict-high priority traffic. If no strict -high priority traffic is on the system, the equation results in the following bandwidth allocation to the fabric_fcset_multicast2:

30/(10+30) percent x (0.4 x 40 gigabits) = approximately 12 gigabits

Configuring Scheduling on Node Device Fabric Interfaces

If you do not want to use default CoS scheduling on Node device fabric interfaces, you can configure two-tier hierarchical scheduling (ETS) the same way that you configure ETS on Node device access interfaces.

- Similarities Between Node Device Fabric Interface and Access Interface Scheduling on page 295
- Differences Between Node Device Fabric Interface and Access Interface Scheduling on page 295

Similarities Between Node Device Fabric Interface and Access Interface Scheduling

Configuring scheduling on a Node device fabric interface is similar to configuring scheduling on an access interface in many ways. In both cases, you configure:

- Schedulers to specify the output scheduling for forwarding class traffic
- Scheduler maps to map schedulers to forwarding classes
- Forwarding classes (or use the default forwarding classes)
- Forwarding class sets (groups of forwarding classes that require similar CoS treatment)
- A separate fc-set for strict-high priority traffic (an fc-set cannot contain a mix of strict-high priority traffic and traffic with a different priority)
- Traffic control profiles to specify the output scheduling for fc-sets
- Traffic control profile and fc-set mapping to interfaces

On Node device fabric interfaces, you configure ETS in the same way and ETS works the same way as on Node device access interfaces

In addition, strict-high priority queues are served first, and then the remaining port bandwidth is allocated to other traffic.

Differences Between Node Device Fabric Interface and Access Interface Scheduling

Configuring scheduling on a Node device fabric interface differs from configuring scheduling on an access interface in several ways. On fabric interfaces:

- You cannot configure classifiers.
- You cannot configure congestion notification profiles (flow control is applied automatically to lossless forwarding classes).
- You specify the interface name differently.

Congestion Management

The Interconnect device is a shared component for all of the connected Node devices. Configuring scheduling on the external fabric interfaces (fte) and the internal Clos fabric interfaces (bfte) enables you to ensure predictable bandwidth usage for traffic flows across the Interconnect device.

Although minimal congestion is expected on the 40-Gbps fabric interfaces, you should configure congestion management to control packet drop during periods of congestion.

- Lossy (Best Effort) Unicast Traffic on page 296
- Lossless Traffic on page 297
- Multidestination Traffic on page 297

Lossy (Best Effort) Unicast Traffic

For unicast traffic that does not require lossless treatment, configure drop profiles (the standard Junos OS packet drop mechanism) to control packet drop during periods of congestion. (Drop profiles are not applied to multidestination traffic.)

A drop profile sets weighted random early detection (WRED) thresholds for dropping packets under different levels of congestion. Congestion levels for packet drop thresholds are fill levels of the output queue. When the output queue fills to a configured threshold, packet drop begins at the configured drop rate. When the output queue fills to a second configured threshold, packet drop reaches the configured maximum drop rate. You can apply different drop profiles to different types of traffic to achieve the desired pattern of packet loss during periods of congestion.

We recommend that you configure a relatively aggressive drop profile for traffic with a high loss priority and a less aggressive drop profile for traffic with a lower loss priority.

To create a drop profile and apply it to traffic of a certain loss priority:

1. Set loss priorities (low, medium-high, high) for different types of lossy unicast traffic when you configure classifiers and apply them to Node device access interfaces.

2. For each loss priority, configure at least one drop profile to define the WRED packet drop probability at different queue fill level thresholds. Create a more aggressive drop profile for traffic with a high loss priority, and progressively less aggressive drop profiles for traffic with medium-high and low loss priorities.

3. As part of scheduler configuration, configure a drop profile map, which maps a drop profile to a loss priority. A scheduler drop profile map can include mapping each loss priority to a drop profile, so you can specify different drop profiles for different traffic loss priorities in one scheduler. The scheduler uses the configured drop profile map to apply different drop profiles to traffic of different loss priorities, and thus control packet drop during periods of congestion.

Copyright © 2018, Juniper Networks, Inc.

Lossless Traffic

Do not configure drop profiles for lossless traffic. If you intend to map a scheduler to a lossless fabric fc-set, do not configure a drop profile for that scheduler.

The QFabric system automatically applies flow control that is similar to priority-based flow control (PFC) to traffic in lossless fabric fc-sets to prevent packet loss. In addition, you must enable PFC on the IEEE 802.1p code points for the lossless traffic at the Node device ingress interface to support lossless transport across the QFabric system. (You should also configure PFC across the Ethernet network to support lossless transport across the rest of the network.)

Multidestination Traffic

Drop profiles are not supported for multidestination traffic. Do not configure a drop profile in schedulers that you want to use for multidestination traffic.

Related Documentation

- Understanding CoS Fabric Forwarding Class Sets on page 330
- Understanding CoS Output Queue Schedulers on page 159
- Understanding CoS Hierarchical Port Scheduling (ETS) on page 192
- Understanding Default CoS Scheduling and Classification on page 79
- Understanding Default CoS Settings on page 27
- Example: Configuring CoS Scheduling Across the QFabric System on page 297
- Example: Configuring Queue Schedulers on page 169
- Example: Configuring CoS Hierarchical Port Scheduling (ETS) on page 198
- Example: Configuring WRED Drop Profiles on page 252
- Example: Configuring Drop Profile Maps on page 258

Example: Configuring CoS Scheduling Across the QFabric System

If you do not want to use the default class of service (CoS) scheduling of traffic across the QFabric system, then in addition to configuring CoS on Node device access interfaces, you can configure two-tier hierarchical scheduling on the fabric interfaces of a QFabric system. Configuring CoS on the fabric interfaces provides more control over class of service (CoS) across the QFabric system and helps to ensure predictable bandwidth consumption across the fabric path.

This topic describes:

- Requirements on page 298
- Overview on page 298
- Configuration on page 306
- Verification on page 318

Requirements

This example uses the following hardware and software components:

- Juniper Networks QFabric System with two Juniper Networks QFX3500 Node devices
- Junos OS Release 12.3 or later for the QFX Series

Overview

Configuring CoS across the QFabric system enables you to control scheduling resources as traffic passes through each type of interface. You can configure CoS on the following QFabric system interface types:

- Node device access interfaces (xe interfaces)—Schedule traffic on the output queues of the 10-Gigabit Ethernet access ports, using standard Node device CoS scheduling configuration components, as described elsewhere in the QFX Series documentation. You can configure different scheduling for different ports and queues.
- Node device fabric interfaces (fte interfaces)—Schedule traffic on the output queues of the 40-Gbps fabric interfaces that connect a Node device to a QFX3008-I or a QFX3600-I Interconnect device using standard Node device CoS scheduling configuration components. You can configure different scheduling for different interfaces and output queues.
- Interconnect device fabric interfaces (fte interfaces)—Schedule traffic on the output queues of the 40-Gbps fabric interfaces that connect an Interconnect device to a Node device. You can configure different scheduling for different interfaces and fabric forwarding class sets (fabric fc-sets).
- Interconnect device internal Clos fabric interfaces (bfte interfaces)—Schedule traffic on the internal 40-Gbps Clos fabric interfaces that connect the three stages of the Clos fabric within the Interconnect device. You can configure one Clos fabric interface scheduler, which is applied to all of the internal Clos fabric interfaces. You cannot configure different schedulers for different Clos fabric interfaces.

This example shows you how to configure hierarchical port scheduling across the QFabric, including the configuration of Node device access interfaces, Node device fabric interfaces, Interconnect device fabric interfaces, and internal Interconnect device Clos fabric interfaces.

Configuring CoS on Interconnect device fabric interfaces differs from configuring CoS on Node device interfaces because the Interconnect device is a shared infrastructure that supports traffic from multiple Node devices and multiple Node device CoS configurations. Take the amounts and types of traffic traversing the Interconnect device into account when you configure CoS on Interconnect device interfaces.

 Copyright © 2018, Juniper Networks, Inc.

Configuring scheduling across the QFabric system entails configuring interfaces on Node devices and Interconnect devices. You configure some or all of the following CoS components on each interface, depending upon the interface type (access, Node fabric, Interconnect fabric, or Interconnect Clos fabric):

- Mapping forwarding classes to priorities (IEEE 802.1p code points) and queues, and configuring lossless forwarding classes
- Defining fc-sets (priority groups)
- Defining drop profiles
- Defining schedulers
- Mapping forwarding classes to schedulers (scheduler map on Node devices, fabric scheduler map on Interconnect devices)
- Defining traffic control profiles
- Configuring a congestion notification profile to enable priority-based flow control (PFC) on lossless forwarding classes (priorities) (Node device access interfaces only)
- Applying congestion notification profiles to interfaces (Node device access interfaces only)
- Assigning fc-sets and traffic control profiles to interfaces (Node device interfaces only) or assigning fabric scheduler maps to interfaces (Interconnect device interfaces only)

NOTE: **This example uses the default behavior aggregate classifiers on the Node device access interfaces. Classifiers are not applied to fabric interfaces. Although packet classification is not scheduling, it controls the forwarding class mapping to IEEE 802.1p priorities, and the loss priorities to which packets are mapped when they enter Node device access ports.**

When you plan port bandwidth scheduling for priority groups (fc-sets on Node devices and class groups on Interconnect devices) and priorities (forwarding classes on Node devices and fabric fc-sets on Interconnect devices), take into account:

- The amounts and types of traffic you expect to traverse the Node device interfaces
- The amounts and types of aggregated traffic from all of the connected Node devices that you expect to traverse the Interconnect device interfaces
- The mapping of priorities into priority groups. Traffic that requires similar treatment usually belongs in the same priority group. To do this on Node devices, place forwarding classes that require similar bandwidth, loss priority, and other characteristics in the same fc-set. For example, you can map all types of best-effort traffic forwarding classes into one fc-set. On Interconnect devices, the default mapping of fabric fc-sets to class groups defines priority group membership and is not user-configurable.
- How much of the port bandwidth you want to allocate to each priority group and to each of the priorities in each priority group. The following considerations apply to bandwidth allocation:

- Estimate how much traffic you expect in each priority's output queue (forwarding class on Node devices and fabric fc-set on Interconnect devices) and how much traffic you expect in each priority group (fc-set on Node devices and class group on Interconnect devices). The priority group traffic is the aggregated amount of traffic in the priorities that belong to the priority group.
- On Node devices, the combined minimum guaranteed bandwidth of the priorities in a priority group should not exceed the minimum guaranteed bandwidth (guaranteed rate) of the priority group. (On Interconnect devices, class group bandwidth is derived from the bandwidth of the member fabric fc-sets, so the sum of the priority bandwidths cannot exceed the priority group bandwidth.) The transmit rate scheduler parameter defines the minimum guaranteed bandwidth for priorities (forwarding classes and fabric fc-sets). Scheduler maps associate schedulers with forwarding classes (Node devices) and fabric scheduler maps associate schedulers with fabric fc-sets (Interconnect devices).
- The combined minimum guaranteed bandwidth of all of the priority groups on an interface should not exceed the interface's total bandwidth.

Topology

Figure 15 on page 300 shows the network topology used in this example.

Figure 15: Network Topology for Scheduling Across the QFabric System

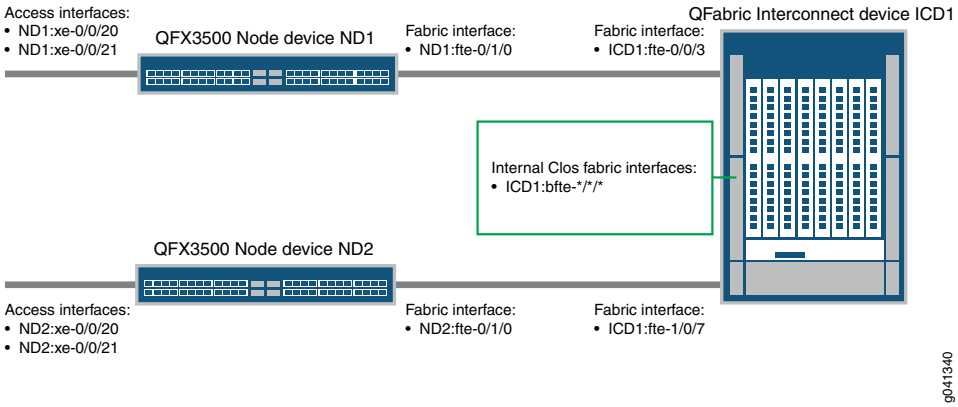

Table 78 on page 301 and Table 79 on page 305 describe the scheduling configuration components on the Node device and the Interconnect device.

To simplify Node device configuration, this example uses the same scheduling configuration on the access interfaces and the fabric interfaces of both QFabric Node devices. This is possible because the scheduler (forwarding-class scheduling) and traffic control profile (fc-set scheduling) rates are specified as percentages of bandwidth instead of as absolute values, so the schedulers and traffic control profiles utilize the port bandwidth in the same way regardless of the absolute amount of available bandwidth. If you want to treat traffic differently on different interfaces or on different interface types,

 Copyright © 2018, Juniper Networks, Inc.

you can configure different schedulers and traffic control profiles and apply them to the interfaces.

Table 78 on page 301 shows the scheduling configuration components for Node device interfaces.

Table 78: Components of the QFabric Node Device Hierarchical Port Scheduling Configuration Topology

Scheduling Component	Settings
Hardware	Two QFX3500 Node devices in a QFabric system
Forwarding classes	This example uses five forwarding classes: • best-effort • fcoe • no-loss • network-control • mcast This example uses the default configuration for three forwarding classes (best-effort, network-control, and mcast). Best-effort traffic is classified into low loss priority and high loss priority by IEEE 802.1p classifiers at the Node device ingress interfaces. The two lossless forwarding classes (fcoe and no-loss) are configured as lossless forwarding classes: • fcoe—Mapped to queue 3 with the **no-loss** parameter specified • no-loss—Mapped to queue 4 with the **no-loss** parameter specified NOTE: Starting with Junos OS Release 12.3, you must include the **no-loss** parameter in the forwarding class configuration for forwarding classes that you want to be lossless. In Junos OS Release 12.3, all default forwarding classes, including the fcoe and no-loss forwarding classes, are lossy forwarding classes by default and must be explicitly configured as lossless to receive lossless CoS treatment. This is a change from lossless forwarding class configuration in earlier releases.
Forwarding class sets (priority groups)	best-effort-pg—contains the forwarding classes best-effort and network-control noloss-pg—contains the forwarding classes fcoe and no-loss multidestination-pg—contains the forwarding class mcast

Table 78: Components of the QFabric Node Device Hierarchical Port Scheduling Configuration Topology (continued)

Scheduling Component	Settings
Drop profiles NOTE: Lossless traffic (fcoe and no-loss forwarding classes) and multidestination traffic do not use drop profiles	This example uses the following drop profiles for lossy traffic classes: • Best-effort unicast traffic with low packet loss priority: Name—dp-be-low Drop start point—25% Drop end point—50% Maximum drop rate—80% • Best-effort traffic unicast with high packet loss priority: Name—dp-be-high Drop start point—10% Drop end point—40% Maximum drop rate—100% • Network-control traffic: Name—dp-nc Drop start point—75% Drop end point—100% Maximum drop rate—50%

Copyright © 2018, Juniper Networks, Inc.

Table 78: Components of the QFabric Node Device Hierarchical Port Scheduling Configuration Topology (continued)

Scheduling Component	Settings
Queue (forwarding class) schedulers	Schedulers configure the bandwidth characteristics of forwarding classes, which are mapped to output queues and to IEEE 802.1p CoS priorities. • Best-effort traffic scheduler: Name—be-sched Transmit rate (minimum guaranteed bandwidth)—90% Shaping rate (maximum bandwidth)—100% Priority—low Drop profiles—dp-be-low and dp-be-high • Network-control traffic scheduler: Name—nc-sched Transmit rate—10% Shaping rate—100% Priority—low Drop profile—dp-nc • FCoE traffic scheduler: Name—fcoe-sched Transmit rate—60% Shaping rate—100% Priority—low Drop profile—None • No-loss traffic scheduler: Name—nl-sched Transmit rate—40% Shaping rate—100% Priority—low Drop profile—None • Multidestination traffic scheduler: Name—mcast-sched Transmit rate—100% Shaping rate—100% Priority—low Drop profile—None NOTE: If you want to specify absolute values instead of percentages for the transmit rate and the shaping rate, you should create separate schedulers for access and fabric interfaces, because access interfaces are 10-Gigabit Ethernet interfaces and fabric interfaces are 40-Gbps interfaces.
Forwarding class to scheduler mapping	• Best-effort traffic scheduler map: Name—be-map Mapping—forwarding class best-effort to scheduler be-sched, forwarding class network-control to scheduler nc-sched • Lossless traffic scheduler map: Name—nl-map Mapping—forwarding class fcoe to scheduler fcoe-sched, forwarding class no-loss to scheduler nl-sched • Multidestination traffic scheduler map: Name—mcast-map Mapping—forwarding class mcast to scheduler mcast-sched

Copyright © 2018, Juniper Networks, Inc.

Table 78: Components of the QFabric Node Device Hierarchical Port Scheduling Configuration Topology (continued)

Scheduling Component	Settings
Priority group (fc-set) traffic control profiles	Traffic control profiles configure the bandwidth for fc-sets (priority groups) and control the amount of port bandwidth allocated to the forwarding classes in the fc-sets. • Best-effort traffic control profile: Name—be-tcp Guaranteed rate (minimum guaranteed bandwidth)—25% Shaping rate (maximum bandwidth)—100% Scheduler map—be-map • Lossless traffic control profile: Name—nl-tcp Guaranteed rate—50% Shaping rate—100% Scheduler map—nl-map • Multidestination traffic control profile: Name—mcast-tcp Guaranteed rate—25% Shaping rate—100% Scheduler map—mcast-map
Hierarchical scheduling (fc-sets and traffic control profiles) association with interfaces	Apply the fc-sets and traffic control profiles to the interfaces of both Node devices: • Access interfaces—ND1:xe-0/0/20, ND1:xe-0/0/21, ND2:xe-0/0/20, ND2:xe-0/0/21 • Fabric interfaces—ND1:fte-0/1/0, ND2:fte-0/1/0
PFC (access interfaces only; do not apply PFC to fabric interfaces)	Code points: 011—fcoe forwarding class traffic priority 010—no-loss forwarding class traffic priority Congestion notification profile name—nl-cnp Enabled on interfaces: ND1:xe-0/0/20, ND1:xe-0/0/21, ND2:xe-0/0/20, and ND2:xe-0/0/21

To simplify Interconnect device configuration, this example uses the same scheduling configuration on the fabric interfaces and the Clos fabric interfaces. If you want to treat traffic differently on different fabric interfaces or on different fabric interface types, you can configure different fabric schedulers, map them to fabric fc-sets, and apply them to the interfaces. (You can apply different mappings of schedulers to fabric fc-sets on different interfaces.)

Copyright © 2018, Juniper Networks, Inc.

NOTE: On Interconnect devices, the network-control forwarding class is mapped by default to the strict-high priority fabric fc-set (fabric_fcset_strict_high). The strict-high priority fabric fc-set receives all of the port bandwidth it needs to service strict-high priority traffic. You can configure a scheduler with a shaping rate (maximum bandwidth) and a drop profile to limit the bandwidth available to the strict-high priority fabric fc-set, if desired. The available fabric port bandwidth for all other traffic in all other fabric fc-sets is the bandwidth that remains after the interface services the strict-high priority traffic.

Table 79 on page 305 shows the scheduling configuration components for Interconnect device interfaces:

Table 79: Components of the QFabric Interconnect Device Hierarchical Port Scheduling Configuration Topology

Fabric Scheduling Component	Settings
Hardware	One QFabric Interconnect device connected to two QFX3500 Node devices in a QFabric system
Forwarding classes	Interconnect devices use the forwarding classes defined on the connected Node devices. The forwarding classes are mapped by default to fabric fc-sets on the Interconnect device. NOTE: If you do not want to use the default forwarding class to fabric fc-set mapping, you can configure the mapping. Forwarding class to fabric fc-set mapping is global and applies to all traffic that crosses the Interconnect device.
Fabric fc-sets	This example uses four of the default fabric fc-sets, with the default mapping of forwarding classes to fabric fc-sets: • fabric_fcset_be (includes the best-effort forwarding class) • fabric_fcset_noloss1 (includes the fcoe forwarding class) • fabric_fcset_noloss2 (includes the no-loss forwarding class) • fabric_fcset_multicast1 (includes the mcast forwarding class)
Class groups (priority groups)	The three default class groups and fabric fc-set membership in the class groups are not user-configurable.
Drop profiles NOTE: Lossless traffic (fabric_fcset_noloss1 and fabric_fcset_noloss2) multidestination traffic do not use drop profiles	This example uses the following drop profiles for lossy traffic classes: • Best-effort unicast traffic with low packet loss priority: Name—fab-dp-be-low Drop start point—20% Drop end point—50% Maximum drop rate—80% • Best-effort unicast traffic with high packet loss priority: Name—fab-dp-be-high Drop start point—5% Drop end point—35% Maximum drop rate—100%

Table 79: Components of the QFabric Interconnect Device Hierarchical Port Scheduling Configuration Topology (continued)

Fabric Scheduling Component	Settings
Queue (fabric fc-set) fabric schedulers	Schedulers configure the bandwidth for fabric fc-sets, which are mapped to output queues and to IEEE 802.1p CoS priorities. The sum of the minimum guaranteed bandwidths (transmit rates) of each fabric fc-set in a class group equals the total minimum guaranteed port bandwidth of the class group. The sum of all of the fabric fc-set transmit rates in all of the class groups equals the percentage of available port bandwidth allocated to the class groups. The sum of all of the fabric fc-set transmit rates must be less than or equal to 100 percent. • Best-effort traffic scheduler: Name—fab-be-sched Transmit rate—25% Shaping rate—100% Drop profiles—fab-dp-be-low, fab-dp-be-high • FCoE traffic scheduler: Name—fab-fcoe-sched Transmit rate—30% Shaping rate—100% Drop profile—None • No-loss traffic scheduler: Name—fab-nl-sched Transmit rate—25% Shaping rate—100% Drop profile—None • Multidestination traffic scheduler: Name—fab-mcast-sched Transmit rate—20% Shaping rate—100% Drop profile—None
Fabric fc-set to fabric forwarding class set scheduler mapping	• Best-effort traffic fabric scheduler mapping: Name—fab-traffic-map Mapping—fabric_fcset_be to scheduler fab-be-sched • FCoE traffic fabric scheduler mapping: Name—fab-traffic-map Mapping—fabric_fcset_noloss1 to scheduler fab-fcoe-sched • No-loss traffic fabric scheduler mapping: Name—fab-traffic-map Mapping—fabric_fcset_noloss2 to scheduler fab-nl-sched • Multidestination traffic fabric scheduler mapping: Name—fab-traffic-map Mapping—fabric_fcset_mcast1 to scheduler fab-mcast-sched
Applying hierarchical scheduling (fabric scheduler map) to interfaces	Fabric interfaces: ICD1:fte-0/0/3, ICD1:fte-1/0/7 Clos fabric interfaces: ICD1:bfte-*/*/*

Configuration

The configuration example is split into two parts, one part for Node device scheduling configuration and one part for Interconnect device scheduling configuration. Although

Copyright © 2018, Juniper Networks, Inc.

this example uses the same scheduling on Node device access and fabric interfaces, you can configure different schedulers for different interfaces. This example also uses the same scheduling on Interconnect device fabric and Clos fabric interfaces, and you can configure different schedulers for different interfaces.

To configure scheduling across a QFabric system, perform these tasks:

- Configuring QFX3500 Node Devices ND1 and ND2 on page 309
- Configuring QFX3500 Interconnect Device ICD1 on page 313
- Results on page 314

CLI Quick Configuration

Node device configuration: to quickly configure scheduling across a QFabric system, copy the following commands, paste them in a text file, remove line breaks, change variables and details to match your network configuration, and then copy and paste the commands into the CLI for Node devices ND1 and ND2 at the **[edit]** hierarchy level. In this example, we use identical scheduling and interfaces on Node devices ND1 and ND2 to simplify the configuration.

```
[edit class-of-service]
set forwarding-classes class fcoe queue-num 3 no-loss
set forwarding-classes class no-loss queue-num 4 no-loss
set forwarding-class-sets best-effort-pg class best-effort
set forwarding-class-sets best-effort-pg class network-control
set forwarding-class-sets noloss-pg class fcoe
set forwarding-class-sets noloss-pg class no-loss
set forwarding-class-sets multidestination-pg class mcast
set drop-profiles dp-be-low interpolate fill-level 25 fill-level 50 drop-probability 0 drop-probability
80
set drop-profiles dp-be-high interpolate fill-level 10 fill-level 40 drop-probability 0 drop-probability
100
set drop-profiles dp-nc interpolate fill-level 75 fill-level 100 drop-probability 0 drop-probability
50
set schedulers be-sched priority low transmit-rate percent 90
set schedulers be-sched shaping-rate percent 100
set schedulers be-sched drop-profile-map loss-priority low protocol any drop-profile dp-be-low
set schedulers be-sched drop-profile-map loss-priority high protocol any drop-profile dp-be-high
set schedulers nc-sched priority low transmit-rate percent 10
set schedulers nc-sched shaping-rate percent 100
set schedulers nc-sched drop-profile-map loss-priority low protocol any drop-profile dp-nc
set schedulers fcoe-sched priority low transmit-rate percent 60
set schedulers fcoe-sched shaping-rate percent 100
set schedulers nl-sched priority low transmit-rate percent 40
set schedulers nl-sched shaping-rate percent 100
set schedulers mcast-sched priority low transmit-rate percent 100
set schedulers mcast-sched shaping-rate percent 100
set scheduler-maps be-map forwarding-class best-effort scheduler be-sched
set scheduler-maps be-map forwarding-class network-control scheduler nc-sched
set scheduler-maps nl-map forwarding-class fcoe scheduler fcoe-sched
set scheduler-maps nl-map forwarding-class no-loss scheduler nl-sched
set scheduler-maps mcast-map forwarding-class mcast scheduler mcast-sched
set traffic-control-profiles be-tcp scheduler-map be-map guaranteed-rate percent 25
set traffic-control-profiles be-tcp shaping-rate percent 100
set traffic-control-profiles nl-tcp scheduler-map nl-map guaranteed-rate percent 50
set traffic-control-profiles nl-tcp shaping-rate percent 100
set traffic-control-profiles mcast-tcp scheduler-map mcast-map guaranteed-rate percent 25
set traffic-control-profiles mcast-tcp shaping-rate percent 100
```

```
set interfaces ND1:xe-0/0/20 forwarding-class-set best-effort-pg output-traffic-control-profile
be-tcp
set interfaces ND1:xe-0/0/20 forwarding-class-set noloss-pg output-traffic-control-profile nl-tcp
set interfaces ND1:xe-0/0/20 forwarding-class-set multidestination-pg
output-traffic-control-profile mcast-tcp
set interfaces ND1:xe-0/0/21 forwarding-class-set best-effort-pg output-traffic-control-profile
be-tcp
set interfaces ND1:xe-0/0/21 forwarding-class-set noloss-pg output-traffic-control-profile nl-tcp
set interfaces ND1:xe-0/0/21 forwarding-class-set multidestination-pg
output-traffic-control-profile mcast-tcp
set interfaces ND1:fte-0/1/0 forwarding-class-set best-effort-pg output-traffic-control-profile
be-tcp
set interfaces ND1:fte-0/1/0 forwarding-class-set noloss-pg output-traffic-control-profile nl-tcp
set interfaces ND1:fte-0/1/0 forwarding-class-set multidestination-pg
output-traffic-control-profile mcast-tcp
set interfaces ND2:xe-0/0/20 forwarding-class-set best-effort-pg output-traffic-control-profile
be-tcp
set interfaces ND2:xe-0/0/20 forwarding-class-set noloss-pg output-traffic-control-profile
nl-tcp
set interfaces ND2:xe-0/0/20 forwarding-class-set multidestination-pg
output-traffic-control-profile mcast-tcp
set interfaces ND2:xe-0/0/21 forwarding-class-set best-effort-pg output-traffic-control-profile
be-tcp
set interfaces ND2:xe-0/0/21 forwarding-class-set noloss-pg output-traffic-control-profile nl-tcp
set interfaces ND2:xe-0/0/21 forwarding-class-set multidestination-pg
output-traffic-control-profile mcast-tcp
set interfaces ND2:fte-0/1/0 forwarding-class-set best-effort-pg output-traffic-control-profile
be-tcp
set interfaces ND2:fte-0/1/0 forwarding-class-set noloss-pg output-traffic-control-profile nl-tcp
set interfaces ND2:fte-0/1/0 forwarding-class-set multidestination-pg
output-traffic-control-profile mcast-tcp
set congestion-notification-profile nl-cnp input ieee-802.1 code-point 011 pfc
set congestion-notification-profile nl-cnp input ieee-802.1 code-point 100 pfc
set interfaces ND1:xe-0/0/20 congestion-notification-profile nl-cnp
set interfaces ND1:xe-0/0/21 congestion-notification-profile nl-cnp
set interfaces ND2:xe-0/0/20 congestion-notification-profile nl-cnp
set interfaces ND2:xe-0/0/21 congestion-notification-profile nl-cnp
```

Interconnect device configuration: to quickly configure scheduling across a QFabric system, copy the following commands, paste them in a text file, remove line breaks, change variables and details to match your network configuration, and then copy and paste the commands into the CLI for Interconnect device ICD1 at the **[edit]** hierarchy level. In this example, we use identical scheduling on the fabric interfaces and the Clos fabric interfaces to simplify the configuration.

NOTE: This configuration uses the default mapping of forwarding classes to fabric fc-sets.

```
[edit class-of-service]
set drop-profiles fab-dp-be-low interpolate fill-level 20 fill-level 50 drop-probability 0
drop-probability 80
set drop-profiles fab-dp-be-high interpolate fill-level 5 fill-level 35 drop-probability 0
drop-probability 100
set schedulers fab-be-sched transmit-rate percent 25
```


Copyright © 2018, Juniper Networks, Inc.

```
set schedulers fab-be-sched shaping-rate percent 100
set schedulers fab-be-sched drop-profile-map loss-priority low protocol any drop-profile
fab-dp-be-low
set schedulers fab-be-sched drop-profile-map loss-priority high protocol any drop-profile
fab-dp-be-high
set schedulers fab-fcoe-sched transmit-rate percent 30
set schedulers fab-fcoe-sched shaping-rate percent 100
set schedulers fab-nl-sched transmit-rate percent 25
set schedulers fab-nl-sched shaping-rate percent 100
set schedulers fab-mcast-sched transmit-rate percent 20
set schedulers fab-mcast-sched shaping-rate percent 100
set scheduler-map-forwarding-class-sets fab-traffic-map forwarding-class-set fabric_fcset_be
scheduler fab-be-sched
set scheduler-map-forwarding-class-sets fab-traffic-map forwarding-class-set
fabric_fcset_noloss1 scheduler fab-fcoe-sched
set scheduler-map-forwarding-class-sets fab-traffic-map forwarding-class-set
fabric_fcset_noloss2 scheduler fab-nl-sched
set scheduler-map-forwarding-class-sets fab-traffic-map forwarding-class-set
fabric_fcset_mcast1 scheduler fab-mcast-sched
set interfaces ICD1:fte-0/0/3 scheduler-map-forwarding-class-sets fab-traffic-map
set interfaces ICD1:fte-1/0/7 scheduler-map-forwarding-class-sets fab-traffic-map
set interfaces ICD1:bfte-*/*/* scheduler-map-forwarding-class-sets fab-traffic-map
```

Configuring QFX3500 Node Devices ND1 and ND2

Step-by-Step Procedure

To perform a step-by-step configuration of lossless forwarding classes, forwarding class sets, drop profiles for lossy traffic, queue schedulers, traffic control profiles, access and fabric interfaces, and PFC:

1. Configure the two lossless forwarding classes (priorities):

```
[edit class-of-service]
user@switch# set forwarding-classes class fcoe queue-num 3 no-loss
user@switch# set forwarding-classes class no-loss queue-num 4 no-loss
```

2. Configure fc-sets (priority groups) to group forwarding classes (priorities) that require similar CoS treatment:

```
[edit class-of-service]
user@switch# set forwarding-class-sets best-effort-pg class best-effort
user@switch# set forwarding-class-sets best-effort-pg class network-control
user@switch# set forwarding-class-sets noloss-pg class fcoe
user@switch# set forwarding-class-sets noloss-pg class no-loss
user@switch# set forwarding-class-sets multidestination-pg class mcast
```

3. Configure the drop profile for the best-effort low loss-priority queue:

```
[edit class-of-service]
user@switch# set drop-profiles dp-be-low interpolate fill-level 25 fill-level 50
drop-probability 0 drop-probability 80
```

4. Configure the drop profile for the best-effort high loss-priority queue:

```
[edit class-of-service]
user@switch# set drop-profiles dp-be-high interpolate fill-level 10 fill-level 40
drop-probability 0 drop-probability 100
```

5. Configure the drop profile for the network-control queue:

```
[edit class-of-service]
user@switch# set drop-profiles dp-nc interpolate fill-level 75 fill-level 100 drop-probability
0 drop-probability 50
```

6. Configure the scheduler that defines the minimum guaranteed bandwidth, priority, maximum bandwidth, and drop profiles for the best-effort queue:

```
[edit class-of-service]
user@switch# set schedulers be-sched priority low transmit-rate percent 90
user@switch# set schedulers be-sched shaping-rate percent 100
user@switch# set schedulers be-sched drop-profile-map loss-priority low protocol any
drop-profile dp-be-low
user@switch# set schedulers be-sched drop-profile-map loss-priority high protocol any
drop-profile dp-be-high
```

7. Configure the scheduler that defines the minimum guaranteed bandwidth, priority, maximum bandwidth, and drop profile for the network-control queue:

```
[edit class-of-service]
user@switch# set schedulers nc-sched priority low transmit-rate percent 10
user@switch# set schedulers nc-sched shaping-rate percent 100
user@switch# set schedulers nc-sched drop-profile-map loss-priority low protocol any
drop-profile dp-nc
```

8. Configure the scheduler that defines the minimum guaranteed bandwidth, priority, and maximum bandwidth for the FCoE queue:

```
[edit class-of-service]
user@switch# set schedulers fcoe-sched priority low transmit-rate percent 60
user@switch# set schedulers fcoe-sched shaping-rate percent 100
```

9. Configure the scheduler that defines the minimum guaranteed bandwidth, priority, and maximum bandwidth for the no-loss queue:

```
[edit class-of-service]
user@switch# set schedulers nl-sched priority low transmit-rate percent 40
user@switch# set schedulers nl-sched shaping-rate percent 100
```

10. Configure the scheduler that defines the minimum guaranteed bandwidth, priority, maximum bandwidth, and drop profile for the mcast queue:

```
[edit class-of-service]
user@switch# set schedulers mcast-sched priority low transmit-rate percent 100
user@switch# set schedulers mcast-sched shaping-rate percent 100
```


Copyright © 2018, Juniper Networks, Inc.

11. Map the schedulers to the appropriate forwarding classes:

```
[edit class-of-service]
user@switch# set scheduler-maps be-map forwarding-class best-effort scheduler be-sched
user@switch# set scheduler-maps be-map forwarding-class network-control scheduler
nc-sched
user@switch# set scheduler-maps nl-map forwarding-class fcoe scheduler fcoe-sched
user@switch# set scheduler-maps nl-map forwarding-class no-loss scheduler nl-sched
user@switch# set scheduler-maps mcast-map forwarding-class mcast scheduler
mcast-sched
```

12. Define the traffic control profile for the best-effort priority group (queue to scheduler mapping, minimum guaranteed bandwidth, and maximum bandwidth):

```
[edit class-of-service]
user@switch# set traffic-control-profiles be-tcp scheduler-map be-map guaranteed-rate
percent 25
user@switch# set traffic-control-profiles be-tcp shaping-rate percent 100
```

13. Define the traffic control profile for the guaranteed delivery priority group (queue to scheduler mapping, minimum guaranteed bandwidth, and maximum bandwidth):

```
[edit class-of-service]
user@switch# set traffic-control-profiles nl-tcp scheduler-map nl-map guaranteed-rate
percent 50
user@switch# set traffic-control-profiles nl-tcp shaping-rate percent 100
```

14. Define the traffic control profile for the multidestination priority group (queue to scheduler mapping, minimum guaranteed bandwidth, and maximum bandwidth):

```
[edit class-of-service]
user@switch# set traffic-control-profiles mcast-tcp scheduler-map mcast-map
guaranteed-rate percent 25
user@switch# set traffic-control-profiles mcast-tcp shaping-rate percent 100
```

15. Apply the three forwarding class sets and the appropriate traffic control profiles to the Node device ND1 access interfaces and fabric interface:

```
[edit class-of-service]
user@switch# set interfaces ND1:xe-0/0/20 forwarding-class-set best-effort-pg
output-traffic-control-profile be-tcp
user@switch# set interfaces ND1:xe-0/0/20 forwarding-class-set noloss-pg
output-traffic-control-profile nl-tcp
user@switch# set interfaces ND1:xe-0/0/20 forwarding-class-set multidestination-pg
output-traffic-control-profile mcast-tcp
user@switch# set interfaces ND1:xe-0/0/21 forwarding-class-set best-effort-pg
output-traffic-control-profile be-tcp
user@switch# set interfaces ND1:xe-0/0/21 forwarding-class-set noloss-pg
output-traffic-control-profile nl-tcp
user@switch# set interfaces ND1:xe-0/0/21 forwarding-class-set multidestination-pg
output-traffic-control-profile mcast-tcp
user@switch# set interfaces ND1:fte-0/1/0 forwarding-class-set best-effort-pg
output-traffic-control-profile be-tcp
```

```
user@switch# set interfaces ND1:fte-0/1/0 forwarding-class-set noloss-pg
output-traffic-control-profile nl-tcp
user@switch# set interfaces ND1:fte-0/1/0 forwarding-class-set multidestination-pg
output-traffic-control-profile mcast-tcp
```

16. Apply the three forwarding class sets and the appropriate traffic control profiles to the Node device ND2 access interfaces and fabric interface:

```
[edit class-of-service]
user@switch# set interfaces ND2:xe-0/0/20 forwarding-class-set best-effort-pg
output-traffic-control-profile be-tcp
user@switch# set interfaces ND2:xe-0/0/20 forwarding-class-set noloss-pg
output-traffic-control-profile nl-tcp
user@switch# set interfaces ND2:xe-0/0/20 forwarding-class-set multidestination-pg
output-traffic-control-profile mcast-tcp
user@switch# set interfaces ND2:xe-0/0/21 forwarding-class-set best-effort-pg
output-traffic-control-profile be-tcp
user@switch# set interfaces ND2:xe-0/0/21 forwarding-class-set noloss-pg
output-traffic-control-profile nl-tcp
user@switch# set interfaces ND2:xe-0/0/21 forwarding-class-set multidestination-pg
output-traffic-control-profile mcast-tcp
user@switch# set interfaces ND2:fte-0/1/0 forwarding-class-set best-effort-pg
output-traffic-control-profile be-tcp
user@switch# set interfaces ND2:fte-0/1/0 forwarding-class-set noloss-pg
output-traffic-control-profile nl-tcp
user@switch# set interfaces ND2:fte-0/1/0 forwarding-class-set multidestination-pg
output-traffic-control-profile mcast-tcp
```

17. Configure a congestion notification profile to enable PFC on the FCoE and no-loss queue IEEE 802.1 code points:

```
[edit class-of-service]
user@switch# set congestion-notification-profile nl-cnp input ieee-802.1 code-point 011
pfc
user@switch# set congestion-notification-profile nl-cnp input ieee-802.1 code-point 100
pfc
```

18. Apply the PFC configuration to the access interfaces on Node device ND1:

```
[edit class-of-service]
user@switch# set interfaces ND1:xe-0/0/20 congestion-notification-profile nl-cnp
set interfaces ND1:xe-0/0/21 congestion-notification-profile nl-cnp
```

19. Apply the PFC configuration to the access interfaces on Node device ND2:

```
[edit class-of-service]
user@switch# set interfaces ND2:xe-0/0/20 congestion-notification-profile nl-cnp
set interfaces ND2:xe-0/0/21 congestion-notification-profile nl-cnp
```


Copyright © 2018, Juniper Networks, Inc.

Configuring QFX3500 Interconnect Device ICD1

Step-by-Step Procedure

To perform a step-by-step configuration of drop profiles for lossy traffic, queue schedulers, and fabric and Clos fabric interfaces:

1. Configure the drop profile for the best-effort low loss-priority queue:

```
[edit class-of-service]
user@switch# set drop-profiles fab-dp-be-low interpolate fill-level 20 fill-level 50
drop-probability 0 drop-probability 80
```

2. Configure the drop profile for the best-effort high loss-priority queue:

```
[edit class-of-service]
user@switch# set drop-profiles fab-dp-be-high interpolate fill-level 5 fill-level 35
drop-probability 0 drop-probability 100
```

3. Configure the fabric scheduler that defines the minimum guaranteed bandwidth, maximum bandwidth, and drop profiles for the best-effort (fabric_fcset_be) queue:

```
[edit class-of-service]
user@switch# set schedulers fab-be-sched transmit-rate percent 25
user@switch# set schedulers fab-be-sched shaping-rate percent 100
user@switch# set schedulers fab-be-sched drop-profile-map loss-priority low protocol
any drop-profile fab-dp-be-low
user@switch# set schedulers fab-be-sched drop-profile-map loss-priority high protocol
any drop-profile fab-dp-be-high
```

4. Configure the fabric scheduler that defines the minimum guaranteed bandwidth and maximum bandwidth for the FCoE (fabric_fcset_noloss1) queue:

```
[edit class-of-service]
user@switch# set schedulers fab-fcoe-sched transmit-rate percent 30
user@switch# set schedulers fab-fcoe-sched shaping-rate percent 100
```

5. Configure the fabric scheduler that defines the minimum guaranteed bandwidth and maximum bandwidth for the no-loss (fabric_fcset_noloss2) queue:

```
[edit class-of-service]
user@switch# set schedulers fab-nl-sched transmit-rate percent 25
user@switch# set schedulers fab-nl-sched shaping-rate percent 100
```

6. Configure the fabric scheduler that defines the minimum guaranteed bandwidth, maximum bandwidth, and drop profile for the multidestination traffic (fabric_fcset_mcast1) queue:

```
[edit class-of-service]
user@switch# set schedulers fab-mcast-sched transmit-rate percent 20
user@switch# set schedulers fab-mcast-sched shaping-rate percent 100
```

7. Map the fabric schedulers to the appropriate fabric fc-sets in the fabric forwarding class scheduler map:

```
[edit class-of-service]
user@switch# set scheduler-map-forwarding-class-sets fab-traffic-map
forwarding-class-set fabric_fcset_be scheduler fab-be-sched
user@switch# set scheduler-map-forwarding-class-sets fab-traffic-map
forwarding-class-set fabric_fcset_noloss1 scheduler fab-fcoe-sched
user@switch# set scheduler-map-forwarding-class-sets fab-traffic-map
forwarding-class-set fabric_fcset_noloss2 scheduler fab-nl-sched
user@switch# set scheduler-map-forwarding-class-sets fab-traffic-map
forwarding-class-set fabric_fcset_mcast1 scheduler fab-mcast-sched
```

8. To configure scheduling on the interfaces, apply the scheduler map to the Interconnect device fabric interfaces and Clos fabric interfaces:

```
[edit class-of-service]
user@switch# set interfaces ICD1:fte-0/0/3 scheduler-map-forwarding-class-sets
fab-traffic-map
user@switch# set interfaces ICD1:fte-1/0/7 scheduler-map-forwarding-class-sets
fab-traffic-map
user@switch# set interfaces ICD1:bfte-*/*/* scheduler-map-forwarding-class-sets
fab-traffic-map
```

Results

Display the results of the CoS configuration on QFX3500 Node devices ND1 and ND2. The system shows only the explicitly configured parameters; it does not show default parameters such as the classifier configuration or the default forwarding classes. In this example, the three lossy forwarding classes (best-effort, network-control, and mcast) are not shown because the example uses the default configuration for these forwarding classes. The results on both Node devices are similar, except the interface names are different because the interface names include the Node device name. The results below are for Node device ND1:

```
user@switch> show configuration class-of-service
  drop-profiles {
    dp-be-low {
      interpolate {
        fill-level [ 25 50 ];
        drop-probability [ 0 80 ];
      }
    }
    dp-be-high {
      interpolate {
        fill-level [ 10 40 ];
        drop-probability [ 0 100 ];
      }
    }
    dp-nc {
      interpolate {
```


Copyright © 2018, Juniper Networks, Inc.

```
            fill-level [ 75 100 ];
            drop-probability [ 0 50 ];
        }
    }
}
forwarding-classes {
    class fcoe queue-num 3 no-loss;
    class no-loss queue-num 4 no-loss;
}
traffic-control-profiles {
    be-tcp {
        scheduler-map be-map;
        shaping-rate percent 100;
        guaranteed-rate percent 25;
    }
    nl-tcp {
        scheduler-map nl-map;
        shaping-rate percent 100;
        guaranteed-rate percent 50;
    }
    mcast-tcp {
        scheduler-map mcast-map;
        shaping-rate percent 100;
        guaranteed-rate percent 25;
    }
}
forwarding-class-sets {
    best-effort-pg {
        class best-effort;
        class network-control;
    }
    noloss-pg {
        class fcoe;
        class no-loss;
    }
    multidestination-pg {
        class mcast;
    }
}
congestion-notification-profile {
    nl-cnp {
        input {
            ieee-802.1 {
                code-point 011 {
                    pfc;
                }
                code-point 100 {
                    pfc;
                }
            }
        }
    }
}
interfaces {
    ND1:xe-0/0/20 {
```

```
        congestion-notification-profile nl-cnp;
        forwarding-class-set {
          best-effort-pg {
            output-traffic-control-profile be-tcp;
          }
          noloss-pg {
            output-traffic-control-profile nl-tcp;
          }
          multidestination-pg {
            output-traffic-control-profile mcast-tcp;
          }
        }
      }
      ND1:xe-0/0/21 {
        congestion-notification-profile nl-cnp;
        forwarding-class-set {
          best-effort-pg {
            output-traffic-control-profile be-tcp;
          }
          noloss-pg {
            output-traffic-control-profile nl-tcp;
          }
          multidestination-pg {
            output-traffic-control-profile mcast-tcp;
          }
        }
      }
      ND1:fte-0/1/0 {
        forwarding-class-set {
          best-effort-pg {
            output-traffic-control-profile be-tcp;
          }
          noloss-pg {
            output-traffic-control-profile nl-tcp;
          }
          multidestination-pg {
            output-traffic-control-profile mcast-tcp;
          }
        }
      }
    }
    scheduler-maps {
      be-map {
        forwarding-class best-effort scheduler be-sched;
        forwarding-class network-control scheduler nc-sched;
      }
      nl-map {
        forwarding-class fcoe scheduler fcoe-sched;
        forwarding-class no-loss scheduler nl-sched;
      }
      mcast-map {
        forwarding-class mcast scheduler mcast-sched;
      }
    }
    schedulers {
```


Copyright © 2018, Juniper Networks, Inc.

```
    be-sched {
      transmit-rate percent 90;
      shaping-rate percent 100;
      priority low;
      drop-profile-map loss-priority low protocol any drop-profile dp-be-low;
      drop-profile-map loss-priority high protocol any drop-profile dp-be-high;
    }
    fcoe-sched {
      transmit-rate percent 60;
      shaping-rate percent 100;
      priority low;
    }
    mcast-sched {
      transmit-rate percent 100;
      shaping-rate percent 100;
      priority low;
    }
    nc-sched {
      transmit-rate percent 10;
      shaping-rate percent 100;
      priority low;
      drop-profile-map loss-priority low protocol any drop-profile dp-nc;
    }
    nl-sched {
      transmit-rate percent 40;
      shaping-rate percent 100;
      priority low;
    }
  }
```

Display the results of the CoS configuration on QFX3500 Interconnect device ICD1. The system shows only the explicitly configured parameters; it does not show default parameters:

```
user@switch> show configuration class-of-service
  drop-profiles {
    fab-dp-be-low {
      interpolate {
        fill-level [ 20 50 ];
        drop-probability [ 0 80 ];
      }
    }
    fab-dp-be-high {
      interpolate {
        fill-level [ 5 35 ];
        drop-probability [ 0 100 ];
      }
    }
  }
  interfaces {
    ICD1:fte-0/0/3 {
      scheduler-map-forwarding-class-sets fab-traffic-map;
    }
    ICD1:fte-1/0/7 {
```

```
        scheduler-map-forwarding-class-sets fab-traffic-map;
      }
      ICD1:bfte-*/*/* {
        scheduler-map-forwarding-class-sets fab-traffic-map;
      }
    }
    scheduler-maps {
      fab-traffic-map {
        forwarding-class-set fabric_fcset_be scheduler fab-be-sched;
        forwarding-class-set fabric_fcset_noloss1 scheduler fab-fcoe-sched;
        forwarding-class-set fabric_fcset_noloss2 scheduler fab-nl-sched;
        forwarding-class-set fabric_fcset_mcast1 scheduler fab-mcast-sched;
      }
    }
    schedulers {
      fab-be-sched {
        transmit-rate percent 25;
        shaping-rate percent 100;
        drop-profile-map loss-priority low protocol any drop-profile fab-dp-be-low;
        drop-profile-map loss-priority high protocol any drop-profile fab-dp-be-high;
      }
      fab-fcoe-sched {
        transmit-rate percent 30;
        shaping-rate percent 100;
      }
      fab-nl-sched {
        transmit-rate percent 25;
        shaping-rate percent 100;
      }
      fab-mcast-sched {
        transmit-rate percent 20;
        shaping-rate percent 100;
      }
    }
```

Verification

To verify that the hierarchical scheduling components have been created and are operating properly, perform these tasks:

- Verifying Lossless Forwarding Class Configuration on the Node Devices on page 319
- Verifying Forwarding Class Set Configuration on the Node Devices on page 319
- Verifying Drop Profile Configuration on the Node Devices on page 320
- Verifying Drop Profile Configuration on the Interconnect Device on page 321
- Verifying Queue Scheduler Configuration and Mapping on the Node Devices on page 322
- Verifying Fabric Queue Scheduler Configuration and Mapping on the Interconnect Device on page 324
- Verifying Traffic Control Profile Configuration on the Node Devices on page 326
- Verifying That PFC Is Enabled on Lossless Queues on the Node Devices on page 327

Copyright © 2018, Juniper Networks, Inc.

- Verifying Access and Fabric Interface Scheduling Configuration on the Node Devices on page 327
- Verifying Fabric Interface Scheduling Configuration on the Interconnect Device on page 329

Verifying Lossless Forwarding Class Configuration on the Node Devices

Purpose On Node devices ND1 and ND2, verify that the two lossless forwarding classes (fcoe and no-loss) have been configured. The system shows only the explicitly configured forwarding classes, so the default configuration of the best-effort, network-control, and mcast forwarding classes is not shown.

Action List the forwarding classes using the operational mode command **show configuration class-of-service forwarding-classes**:

```
user@switch> show configuration class-of-service forwarding-classes
```

```
class fcoe queue-num 3 no-loss;
class no-loss queue-num 4 no-loss;
```

Meaning The **show configuration class-of-service forwarding-classes** command lists each of the configured forwarding classes, the queue to which the forwarding class is mapped, and whether the forwarding class has been configured to be lossless with the **no-loss** option. The command output shows that:

- Forwarding class **fcoe** maps to queue **3** and is configured as a lossless queue with the **no-loss** option
- Forwarding class **no-loss** maps to queue **4** and is configured as a lossless queue with the **no-loss** option

Verifying Forwarding Class Set Configuration on the Node Devices

Purpose Verify that the correct forwarding classes belong to the appropriate fc-set.

Action List the fc-sets on Node devices ND1 and ND2 using the operational mode command **show class-of-service forwarding-class-set**:

```
user@switch> show class-of-service forwarding-class-set
```

```
Forwarding class set: best-effort-pg, Type: normal-type, Forwarding class set
index: 19907
  Forwarding class                        Index
  best-effort                               0
  network-control                           5

Forwarding class set: noloss-pg, Type: normal-type, Forwarding class set index:
43700
  Forwarding class                        Index
  fcoe                                      2
```

```
  no-loss                                 3

Forwarding class set: multidestination-pg, Type: normal-type, Forwarding class
set index: 60758
  Forwarding class                      Index
  mcast                                   4
```

Meaning The **show class-of-service forwarding-class-set** command lists all of the configured fc-sets (priority groups), the forwarding classes (priorities) that belong to each fc-set, and the internal index number of each fc-set. The command output shows that:

- The fc-set **best-effort-pg** includes the forwarding classes **best-effort** and **network-control**.
- The fc-set **noloss-pg** includes the forwarding classes **fcoe** and **no-loss**.
- The fc-set **multidestination-pg** includes the forwarding class **mcast**.

Verifying Drop Profile Configuration on the Node Devices

Purpose On Node devices ND1 and ND2, verify that the drop profiles **dp-be-low**, **dp-be-high**, and **dp-nc** are configured with the correct fill levels and drop probabilities.

Action On Node devices ND1 and ND2, list the drop profiles using the operational mode command **show configuration class-of-service drop-profiles**:

```
user@switch> show configuration class-of-service drop-profiles
```

```
dp-be-low {
    interpolate {
        fill-level [ 25 50 ];
        drop-probability [ 0 80 ];
    }
}
dp-be-high {
    interpolate {
        fill-level [ 10 40 ];
        drop-probability [ 0 100 ];
    }
}
dp-nc {
    interpolate {
        fill-level [ 75 100 ];
        drop-probability [ 0 50 ];
    }
```

Meaning The **show configuration class-of-service drop-profiles** command lists the drop profiles and their properties. The command output shows that there are three drop profiles configured, **dp-be-low**, **dp-be-high**, and **dp-nc**. The output also shows that:

 Copyright © 2018, Juniper Networks, Inc.

- For **dp-be-low**, the drop start point (the first fill level) is when the queue is 25 percent filled, the drop end point (the second fill level) occurs when the queue is 50 percent filled, and the drop probability at the drop end point is 80 percent.
- For **dp-be-high**, the drop start point (the first fill level) is when the queue is 10 percent filled, the drop end point (the second fill level) occurs when the queue is 40 percent filled, and the drop probability at the drop end point is 100 percent.
- For **dp-nc**, the drop start point (the first fill level) is when the queue is 75 percent filled, the drop end point (the second fill level) occurs when the queue is 100 percent filled, and the drop probability at the drop end point is 50 percent.

Verifying Drop Profile Configuration on the Interconnect Device

Purpose On Interconnect device ICD1, verify that drop profiles **fab-dp-be-low** and **fab-dp-be-high** are configured with the correct fill levels and drop probabilities.

Action List the drop profiles using the operational mode command **show configuration class-of-service drop-profiles**:

```
user@switch> show configuration class-of-service drop-profiles
fab-dp-be-low {
    interpolate {
        fill-level [ 20 50 ];
        drop-probability [ 0 80 ];
    }
}
fab-dp-be-high {
    interpolate {
        fill-level [ 5 35 ];
        drop-probability [ 0 100 ];
    }
}
```

Meaning The **show configuration class-of-service drop-profiles** command lists the drop profiles and their properties. The command output shows that there are two drop profiles configured, **fab-dp-be-low** and **fab-dp-be-high**. The output also shows that:

- For **fab-dp-be-low**, the drop start point (the first fill level) is when the queue is 20 percent filled, the drop end point (the second fill level) occurs when the queue is 50 percent filled, and the drop probability at the drop end point is 80 percent.
- For **fab-dp-be-high**, the drop start point (the first fill level) is when the queue is 5 percent filled, the drop end point (the second fill level) occurs when the queue is 35 percent filled, and the drop probability at the drop end point is 100 percent.

Verifying Queue Scheduler Configuration and Mapping on the Node Devices

Purpose Verify that the Node device ND1 and ND2 queue schedulers are configured with the correct bandwidth parameters and priorities, mapped to the correct forwarding classes and queues, and mapped to the correct drop profiles.

Action List the scheduler maps using the operational mode command **show class-of-service scheduler-map**:

```
user@switch> show class-of-service scheduler-map
Scheduler map: be-map, Index: 64023

  Scheduler: be-sched, Forwarding class: best-effort, Index: 13005
    Transmit rate: 90 percent, Rate Limit: none, Buffer size: remainder,
    Buffer Limit: none, Priority: low
    Excess Priority: unspecified
    Shaping rate: 100 percent,
    Drop profiles:
      Loss priority   Protocol    Index    Name
      Low             any         55387    dp-be-low
      Medium high     any             1    <default-drop-profile>
      High            any          4369    dp-be-high

  Scheduler: nc-sched, Forwarding class: network-control, Index: 45740
    Transmit rate: 10 percent, Rate Limit: none, Buffer size: remainder,
    Buffer Limit: none, Priority: low
    Excess Priority: unspecified
    Shaping rate: 100 percent,
    Drop profiles:
      Loss priority   Protocol    Index    Name
      Low             any         44207    dp-nc
      Medium high     any             1    <default-drop-profile>
      High            any             1    <default-drop-profile>

Scheduler map: nl-map, Index: 61447

  Scheduler: fcoe-sched, Forwarding class: fcoe, Index: 37289
    Transmit rate: 60 percent, Rate Limit: none, Buffer size: remainder,
    Buffer Limit: none, Priority: low
    Excess Priority: unspecified
    Shaping rate: 100 percent,
    Drop profiles:
      Loss priority   Protocol    Index    Name
      Low             any         44207    <default-drop-profile>
      Medium high     any             1    <default-drop-profile>
      High            any             1    <default-drop-profile>

  Scheduler: nl-sched, Forwarding class: no-loss, Index: 29359
    Transmit rate: 40 percent, Rate Limit: none, Buffer size: remainder,
    Buffer Limit: none, Priority: low
    Excess Priority: unspecified
    Shaping rate: 100 percent,
    Drop profiles:
      Loss priority   Protocol    Index    Name
      Low             any         44207    <default-drop-profile>
      Medium high     any             1    <default-drop-profile>
```

 Copyright © 2018, Juniper Networks, Inc.

```
      High            any             1    <default-drop-profile>

Scheduler map: mcast-map, Index: 63239

  Scheduler: mcast-sched, Forwarding class: mcast, Index: 29359
    Transmit rate: 100 percent, Rate Limit: none, Buffer size: remainder,
    Buffer Limit: none, Priority: low
    Excess Priority: unspecified
    Shaping rate: 100 percent,
    Drop profiles:
      Loss priority   Protocol    Index    Name
      Low             any             1    <default-drop-profile>
      Medium high     any             1    <default-drop-profile>
      High            any             1    <default-drop-profile>
```

Meaning The **show class-of-service scheduler-map** command lists the three configured scheduler maps. For each scheduler map, the command output includes:

- The name of the scheduler map (**Scheduler map** field)
- The name of the scheduler (**Scheduler** field)
- The forwarding classes mapped to the scheduler (**Forwarding class** field)
- The minimum guaranteed queue bandwidth (**Transmit rate** field)
- The scheduling priority (**Priority** field)
- The maximum bandwidth in the priority group that the queue can consume (**Shaping rate** field)
- The drop profile loss priority (**Loss priority** field) for each drop profile name (**name** field)

The command output shows that:

- The scheduler map **be-map** has been created and has these properties:
  - There are two schedulers, **be-sched** and **nc-sched**.
  - The scheduler **be-sched** has one forwarding class, **best-effort**.
  - Scheduler **be-sched** forwarding class **best-effort** has a minimum guaranteed bandwidth of **90 percent**, can consume a maximum of **100 percent** of the priority group bandwidth, and uses the drop profile **dp-be-low** for low loss-priority traffic, the default drop profile for medium-high loss-priority traffic, and the drop profile **dp-be-high** for high loss-priority traffic.
  - The scheduler **nc-sched** has one forwarding class, **network-control**.
  - The **network-control** forwarding class has a minimum guaranteed bandwidth of **10 percent**, can consume a maximum of **100 percent** of the priority group bandwidth, and uses the drop profile **dp-nc** for low loss-priority traffic and the default drop profile for medium-high and high loss priority traffic.
- The scheduler map **nl-map** has been created and has these properties:

  - There are two schedulers, **fcoe-sched** and **nl-sched**.
  - The scheduler **fcoe-sched** has one forwarding class, **fcoe**.
  - The **fcoe** forwarding class has a minimum guaranteed bandwidth of **60 percent**, and can consume a maximum of **100 percent** of the priority group bandwidth.
  - The scheduler **nl-sched** has one forwarding class, **no-loss**.
  - The **no-loss** forwarding class has a minimum guaranteed bandwidth of **40 percent**, and can consume a maximum of **100 percent** of the priority group bandwidth.
- The scheduler map **mcast-map** has been created and has these properties:
  - There is one scheduler, **mcast-sched**.
  - The scheduler **mcast-sched** has one forwarding class, **mcast**.
  - The **mcast** forwarding class has a minimum guaranteed bandwidth of **100 percent**, and can consume a maximum of **100 percent** of the priority group bandwidth.

Verifying Fabric Queue Scheduler Configuration and Mapping on the Interconnect Device

Purpose Verify that the Interconnect device ICD1 fabric queue schedulers are configured with the correct bandwidth parameters, mapped to the correct fabric fc-sets, and mapped to the correct drop profiles.

Action List the fabric scheduler maps using the operational mode command **show class-of-service scheduler-map-forwarding-class-sets**:

```
user@switch> show class-of-service scheduler-map-forwarding-class-sets
Scheduler map forwarding class set: fab-traffic-map, Index: 2

  Scheduler: fab-be-sched, Forwarding class set: fabric_fcset_be, Index: 21
    Transmit rate: 25 percent, Rate Limit: none, Buffer size: 25 percent,
    Buffer Limit: none, Priority: low
    Excess Priority: unspecified
    Shaping rate: 100 percent,
    Drop profiles:
      Loss priority   Protocol    Index    Name
      Low             any         55387    fab-dp-be-low
      Medium high     any             1    <default-drop-profile>
      High            any          4369    fab-dp-be-high


  Scheduler: fab-fcoe-sched, Forwarding class set: fabric_fcset_noloss1, Index:
23
    Transmit rate: 30 percent, Rate Limit: none, Buffer size: 30 percent,
    Buffer Limit: none, Priority: low
    Excess Priority: unspecified
    Shaping rate: 100 percent,
    Drop profiles:
      Loss priority   Protocol    Index    Name
      Low             any             1    <default-drop-profile>
      Medium high     any             1    <default-drop-profile>
```

 Copyright © 2018, Juniper Networks, Inc.

```
      High            any             1    <default-drop-profile>

  Scheduler: fab-nl-sched, Forwarding class set: fabric_fcset_noloss2, Index: 27

    Transmit rate: 25 percent, Rate Limit: none, Buffer size: 25 percent,
    Buffer Limit: none, Priority: low
    Excess Priority: unspecified
    Shaping rate: 100 percent,
    Drop profiles:
      Loss priority   Protocol    Index    Name
      Low             any             1    <default-drop-profile>
      Medium high     any             1    <default-drop-profile>
      High            any             1    <default-drop-profile>

  Scheduler: fab-mcast-sched, Forwarding class set: fabric_fcset_multicast1,
Index: 32
    Transmit rate: 20 percent, Rate Limit: none, Buffer size: remainder,
    Buffer Limit: none, Priority: low
    Excess Priority: unspecified
    Shaping rate: 100 percent,
    Drop profiles:
      Loss priority   Protocol    Index    Name
      Low             any             1    <default-drop-profile>
      Medium high     any             1    <default-drop-profile>
      High            any             1    <default-drop-profile>
```

Meaning The **show class-of-service scheduler-map-forwarding-class-sets** command lists the configured fabric scheduler map. The command output includes:

- The name of the fabric scheduler map (**Scheduler map forwarding class set** field)
- The name of the fabric scheduler (**Scheduler** field)
- The fabric fc-sets mapped to the scheduler (**Forwarding class set** field)
- The minimum guaranteed queue bandwidth (**Transmit rate** field)
- The maximum bandwidth in the priority group that the queue can consume (**Shaping rate** field)
- The drop profile loss priority (**Loss priority** field) for each drop profile name (**Name** field)

The command output shows that:

- The fabric scheduler map **fab-traffic-map** has been created and has these properties:
  - There are four fabric schedulers, **fab-be-sched**, **fab-fcoe-sched**, **fab-nl-sched**, and **fab-mcast-sched**.
  - The fabric scheduler **fab-be-sched** has one fabric fc-set, **fabric_fcset_be**.

    The fabric fc-set **fabric_fcset_be** has a minimum guaranteed bandwidth of **25 percent**, can consume a maximum of **100 percent** of the priority group bandwidth, and uses the drop profile **fab-dp-be-low** for low loss-priority traffic, the default drop profile for medium-high loss-priority traffic, and the drop profile **fab-dp-be-high** for high loss-priority traffic.

- The fabric scheduler **fab-fcoe-sched** has one fabric fc-set, **fabric_fcset_noloss1**.

  The **fabric_fcset_noloss1** fabric fc-set has a minimum guaranteed bandwidth of **30 percent**, and can consume a maximum of **100 percent** of the priority group bandwidth.

- The fabric scheduler **fab-nl-sched** has one fabric fc-set, **fabric_fcset_noloss2**.

  The **fabric_fcset_noloss2** fabric fc-set has a minimum guaranteed bandwidth of **25 percent**, and can consume a maximum of **100 percent** of the priority group bandwidth.

- The fabric scheduler **fab-mcast-sched** has one fabric fc-set, **fabric_fcset_mcast1**.

  The **fabric_fcset_multicast1** fabric fc-set has a minimum guaranteed bandwidth of **20 percent**, and can consume a maximum of **100 percent** of the priority group bandwidth.

Verifying Traffic Control Profile Configuration on the Node Devices

Purpose Verify that the traffic control profiles (priority groups) **be-tcp**, **nl-tcp**, and **mcast-tcp** have been created with the correct bandwidth parameters and scheduler mapping.

Action List the traffic control profiles using the operational mode command **show class-of-service traffic-control-profile**:

```
user@switch> show class-of-service traffic-control-profile
Traffic control profile: be-tcp, Index: 40535
  Shaping rate: 100 percent
  Scheduler map: be-map
  Guaranteed rate: 25 percent

Traffic control profile: nl-tcp, Index: 37959
  Shaping rate: 100 percent
  Scheduler map: nl-map
  Guaranteed rate: 50 percent

Traffic control profile: mcast-tcp, Index: 47661
  Shaping rate: 100 percent
  Scheduler map: mcast-map
  Guaranteed rate: 25 percent
```

Meaning The **show class-of-service traffic-control-profile** command lists all of the configured traffic control profiles. For each traffic control profile, the command output includes:

- The name of the traffic control profile (**Traffic control profile**)
- The maximum port bandwidth the priority group can consume (**Shaping rate**)
- The scheduler map associated with the traffic control profile (**Scheduler map**)
- The minimum guaranteed priority group port bandwidth (**Guaranteed rate**)

 Copyright © 2018, Juniper Networks, Inc.

The command output shows that:

- The traffic control profile **be-tcp** can consume a maximum of **100 percent** of the port bandwidth, is associated with the scheduler map **be-map**, and has a minimum guaranteed bandwidth of **25 percent** of port bandwidth.
- The traffic control profile **nl-tcp** can consume a maximum of **100 percent** of the port bandwidth, is associated with the scheduler map **nl-map**, and has a minimum guaranteed bandwidth of **50 percent**.
- The traffic control profile **mcast-tcp** can consume a maximum of **100 percent** of the port bandwidth, is associated with the scheduler map **mcast-map**, and has a minimum guaranteed bandwidth of **25 percent**.

Verifying That PFC Is Enabled on Lossless Queues on the Node Devices

Purpose Verify that PFC is enabled on the correct queues (as mapped to IEEE 802.1p priorities in the forwarding class configuration) for lossless transport.

Action List the congestion notification profiles using the operational mode command **show class-of-service congestion-notification**:

```
user@switch> show class-of-service congestion-notification
Type: Input, Name: nl-cnp, Index: 51687
Priority     PFC
  000          Disabled
  001          Disabled
  010          Disabled
  011          Enabled
  100          Enabled
  101          Disabled
  110          Disabled
  111          Disabled
```

Meaning The **show class-of-service congestion-notification** command lists all of the congestion notification profiles and the IEEE 802.1p code points with PFC enabled. The command output shows that PFC is enabled for code points **011** (**fcoe** queue) and **100** (**no-loss** queue) for the **nl-cnp** congestion notification profile.

Verifying Access and Fabric Interface Scheduling Configuration on the Node Devices

Purpose Verify that the correct fc-sets, traffic control profiles, and congestion notification profiles are mapped to the correct interfaces on Node devices ND1 and ND2.

Action List the interfaces on Node devices ND1 and ND2 using the operational mode command **show configuration class-of-service interfaces**. For example, the output on Node device ND1 shows:

```
user@switch> show configuration class-of-service interfaces
ND1:xe-0/0/20 {
    forwarding-class-set {
        best-effort-pg {
            output-traffic-control-profile be-tcp;
        }
        noloss-pg {
            output-traffic-control-profile nl-tcp;
        }
        multidestination-pg {
            output-traffic-control-profile mcast-tcp;
        }
    }
    congestion-notification-profile nl-cnp;
}
ND1:xe-0/0/21 {
    forwarding-class-set {
        best-effort-pg {
            output-traffic-control-profile be-tcp;
        }
        noloss-pg {
            output-traffic-control-profile nl-tcp;
        }
        multidestination-pg {
            output-traffic-control-profile mcast-tcp;
        }
    }
    congestion-notification-profile nl-cnp;
}
ND1:fte-0/1/0 {
    forwarding-class-set {
        best-effort-pg {
            output-traffic-control-profile be-tcp;
        }
        noloss-pg {
            output-traffic-control-profile nl-tcp;
        }
        multidestination-pg {
            output-traffic-control-profile mcast-tcp;
        }
    }
}
```

Meaning The **show configuration class-of-service interfaces** command shows that the fc-sets and (output) traffic control profiles mapped to the interfaces are:

- **best-effort-pg** fc-set with **be-tcp** traffic control profile
- **noloss-pg** fc-set with **nl-tcp** traffic control profile
- **multidestination-pg** fc-set with **mcast-tcp** traffic control profile

 Copyright © 2018, Juniper Networks, Inc.

The command also shows that the access interfaces include the congestion notification profile **nl-cnp** to enable PFC on the IEEE 802.1p code points of lossless traffic.

Verifying Fabric Interface Scheduling Configuration on the Interconnect Device

Purpose Verify that the correct fabric scheduler maps are associated with the correct fabric and Clos fabric interfaces on Interconnect device ICD1.

Action List the interfaces using the operational mode command **show configuration class-of-service interfaces**:

```
user@switch> show configuration class-of-service interfaces
ICD1:fte-0/0/3 {
    scheduler-map-forwarding-class-set fab-traffic-map;
    }
ICD1:fte-1/0/7
    scheduler-map-forwarding-class-set fab-traffic-map;
    }
ICD1:bfte-*/*/* {
    scheduler-map-forwarding-class-set fab-traffic-map;
    }
```

Meaning The **show configuration class-of-service interfaces** command shows that the same fabric forwarding class scheduler map is on all of the interfaces:

- **fab-traffic-map**

Related Documentation

- Understanding CoS Scheduling Across the QFabric System on page 276
- Understanding CoS Scheduling on QFabric System Node Device Fabric (fte) Ports on page 149
- Understanding Default CoS Scheduling on QFabric System Interconnect Devices (Junos OS Release 13.1 and Later Releases) on page 265
- Understanding CoS Fabric Forwarding Class Sets on page 330
- Understanding CoS Output Queue Schedulers on page 159
- Understanding CoS Hierarchical Port Scheduling (ETS) on page 192
- Understanding Default CoS Scheduling and Classification on page 79
- Example: Configuring Queue Schedulers on page 169
- Example: Configuring WRED Drop Profiles on page 252
- Example: Configuring Drop Profile Maps on page 258

Understanding CoS Fabric Forwarding Class Sets

Fabric forwarding class sets (fabric fc-sets) are similar to the fc-sets (priority groups) you configure on Node devices. The major differences are:

1. Fabric fc-sets group traffic for transport across the QFX3008-I or QFX3600-I Interconnect device (the fabric). Node device fc-sets group traffic on a Node device for transport across that Node device.

2. Fabric fc-sets are global. They apply to the entire fabric. Node device fc-sets apply only to the Node device on which they are configured.

3. Fabric fc-sets are mapped directly to Interconnect device output queues; in this way, they behave similarly to forwarding classes on a Node device.

   Fabric fc-sets map to Interconnect device fabric output queues statically—you cannot configure the mapping of fabric fc-sets to fabric output queues. All traffic in a fabric fc-set maps to the same output queue.

   Node device fc-sets include forwarding classes that map to Node device output queues, and you can configure the mapping of forwarding classes to output queues (or you can use the default mapping). Because output queues are mapped to forwarding classes, different classes of traffic in a Node device fc-set can be mapped to different output queues.

Node device fc-sets consist of forwarding classes containing traffic that requires similar CoS treatment. (Forwarding classes are default forwarding classes or user-defined forwarding classes.) You can configure CoS for each fc-set to determine how the traffic of its forwarding classes is scheduled on a Node device.

When traffic exits a Node device interface and enters an Interconnect device fabric interface, the Interconnect device uses the same forwarding classes to group traffic. The forwarding classes are mapped to global fabric fc-sets for transport across the fabric. Like fc-sets on a Node device, fabric fc-sets also contain traffic that requires similar CoS treatment. Also like fc-sets on a Node device, you can configure CoS on fabric fc-sets.

Fabric fc-sets reside on the Interconnect device and are global to the QFabric system. Fabric fc-sets apply to all traffic that traverses the fabric. The mapping of forwarding classes to fabric fc-sets is global and applies to all forwarding classes with traffic that traverses the fabric from all connected Node devices. You can change the mapping of forwarding classes to fabric fc-sets. All mapping changes you make are global. For example, if you change the fabric fc-set to forwarding class mapping of the default best-effort forwarding class, then every Node device's best-effort forwarding class traffic that traverses the fabric is mapped to that fabric fc-set. The CoS you configure on a fabric fc-set applies to all the traffic that belongs to that fabric fc-set, from all connected Node devices.

This topic describes:

 Copyright © 2018, Juniper Networks, Inc.

- Default Fabric Forwarding Class Sets on page 331
- Fabric Forwarding Class Set Configuration and Implementation on page 334
- QFabric System CoS on page 336
- Support for Flow Control and Lossless Transport Across the Fabric on page 336
- Viewing Fabric Forwarding Class Set Information on page 339
- Summary of Fabric Forwarding Class Set and Node Device Forwarding Class Set Differences on page 340

Default Fabric Forwarding Class Sets

Interconnect devices have 12 default fabric fc-sets, including five visible default fabric fc-sets, four for unicast traffic and one for multidestination (multicast, broadcast, and destination lookup failure) traffic.

There are also seven hidden default fabric fc-sets. There are three hidden default fabric fc-sets for multidestination traffic that you can use if you want to map different multidestination forwarding classes to different multidestination fabric fc-sets. There are four hidden default fabric fc-sets for lossless traffic that you can use to map different lossless forwarding classes (priorities) to different lossless fabric fc-sets. Table 80 on page 331 shows the default fabric fc-sets:

Table 80: Default Fabric Forwarding Class Sets

Fabric Forwarding Class Set Name	Characteristics
fabric_fcset_be	Transports best-effort unicast traffic across the fabric.
fabric_fcset_strict_high	Transports unicast traffic that has been configured with **strict-high** priority and in the **network-control** forwarding class across the fabric. This fabric fc-set receives as much bandwidth across the fabric as it needs to service the traffic in the group up to the entire fabric interface bandwidth. For this reason, exercise caution when mapping traffic to this fabric fc-set to avoid starving other traffic.
fabric_fcset_noloss1	Transports unicast traffic in the default **fcoe** forwarding class across the fabric.
fabric_fcset_noloss2	Transports unicast traffic in the default **no-loss** forwarding class across the fabric.
fabric_fcset_noloss3	(Hidden) No traffic is assigned by default to this fabric fc-set. Unless traffic is mapped to this fabric fc-set, this fabric fc-set remains hidden. This fabric fc-set is valid only for lossless forwarding classes.
fabric_fcset_noloss4	(Hidden) No traffic is assigned by default to this fabric fc-set. Unless traffic is mapped to this fabric fc-set, this fabric fc-set remains hidden. This fabric fc-set is valid only for lossless forwarding classes.

Copyright © 2018, Juniper Networks, Inc.

Table 80: Default Fabric Forwarding Class Sets (continued)

Fabric Forwarding Class Set Name	Characteristics
fabric_fcset_noloss5	(Hidden) No traffic is assigned by default to this fabric fc-set. Unless traffic is mapped to this fabric fc-set, this fabric fc-set remains hidden. This fabric fc-set is valid only for lossless forwarding classes.
fabric_fcset_noloss6	(Hidden) No traffic is assigned by default to this fabric fc-set. Unless traffic is mapped to this fabric fc-set, this fabric fc-set remains hidden. This fabric fc-set is valid only for lossless forwarding classes.
fabric_fcset_multicast1	Transports multidestination traffic in the **mcast** forwarding class across the fabric. This fabric fc-set is valid only for multidestination forwarding classes.
fabric_fcset_multicast2	(Hidden) No traffic is assigned by default to this fabric fc-set. Unless traffic is mapped to this fabric fc-set, this fabric fc-set remains hidden. This fabric fc-set is valid only for multidestination forwarding classes.
fabric_fcset_multicast3	(Hidden) No traffic is assigned by default to this fabric fc-set. Unless traffic is mapped to this fabric fc-set, this fabric fc-set remains hidden. This fabric fc-set is valid only for multidestination forwarding classes.
fabric_fcset_multicast4	(Hidden) No traffic is assigned by default to this fabric fc-set. Unless traffic is mapped to this fabric fc-set, this fabric fc-set remains hidden. This fabric fc-set is valid only for multidestination forwarding classes.

The five default forwarding classes (**best-effort**, **fcoe**, **no-loss**, **network-control**, and **mcast**) are mapped to the fabric fc-sets by default as shown in Table 81 on page 332.

Table 81: Default Forwarding Class to Fabric Forwarding Class Set Mapping

Forwarding Class	Fabric Forwarding Class Set	Fabric Output Queue	Maximum MTU Supported for Lossless Operation
best-effort	fabric_fcset_be	0	NA
network-control	fabric_fcset_strict_high	7	NA
fcoe	fabric_fcset_noloss1	1	9K
no-loss	fabric_fcset_noloss2	2	9K
mcast	fabric_fcset_multicast1	8	NA

Copyright © 2018, Juniper Networks, Inc.

Table 81: Default Forwarding Class to Fabric Forwarding Class Set Mapping (continued)

Forwarding Class	Fabric Forwarding Class Set	Fabric Output Queue	Maximum MTU Supported for Lossless Operation
No forwarding classes are mapped by default to this hidden fabric fc-set.	fabric_fcset_noloss3	3	9k
No forwarding classes are mapped by default to this hidden fabric fc-set.	fabric_fcset_noloss4	4	9k
No forwarding classes are mapped by default to this hidden fabric fc-set.	fabric_fcset_noloss5	5	9k
No forwarding classes are mapped by default to this hidden fabric fc-set.	fabric_fcset_noloss6	6	9k
No forwarding classes are mapped by default to this hidden fabric fc-set.	fabric_fcset_multicast2	9	NA
No forwarding classes are mapped by default to this hidden fabric fc-set.	fabric_fcset_multicast3	10	NA
No forwarding classes are mapped by default to this hidden fabric fc-set.	fabric_fcset_multicast4	11	NA

The maximum fiber cable length between the QFabric system Node device and the QFabric system Interconnect device is 150 meters.

TIP: If you explicitly configure lossless forwarding classes, we recommend that you map each user-configured lossless forwarding class to an unused fabric fc-set (fabric_fcset_noloss3 through fabric_fcset_noloss6) on a one-to-one basis: one lossless forwarding class mapped to one lossless fabric fc-set.

The reason for one-to-one mapping is to avoid fate sharing of lossless flows. Because each fabric fc-set is mapped statically to an output queue, when you map more than one forwarding class to a fabric fc-set, all of the traffic in all of the forwarding classes that belong to the fabric fc-set uses the same output queue. If that output queue becomes congested due to congestion caused by one of the flows, the other flows are also affected. (They share fate because the flow that congests the output queue affects flows that are not experiencing congestion.)

If you want to map different multidestination forwarding classes to different multidestination fabric fc-sets, use one or more of the hidden multidestination fabric fc-sets.

NOTE: The global mapping of forwarding classes to fabric fc-sets is independent of the mapping of forwarding classes to Node device fc-sets. Global mapping of forwarding classes to fabric fc-sets occurs only on the Interconnect device. The Node device mapping of forwarding classes to fc-sets does not affect the global mapping of forwarding classes to fabric fc-sets on the Interconnect device, and vice versa.

When you define new forwarding classes on a Node device, you explicitly map those forwarding classes to Node device fc-sets. However, new (user-created) forwarding classes are mapped by default to fabric fc-sets. (You can override the default mapping if you want to configure the forwarding class to fabric fc-set mapping explicitly, as described in the next section.)

By default:

- All best-effort traffic forwarding classes that you create are mapped to the **fabric_fcset_be** fabric fc-set.
- All lossless traffic forwarding classes that you create are mapped to the **fabric_fcset_noloss1** or **fabric_fcset_noloss2** fabric fc-set.

  NOTE: To avoid fate sharing, we recommend that you configure one-to-one mapping of user-configured lossless forwarding classes to lossless fabric fc-sets instead of using the default mapping. You can also use firewall filters to mitigate fate sharing by separating flows that belong to the same forwarding class as the traffic traverses the Interconnect device (see "Understanding How to Mitigate Fate Sharing on a QFabric System Interconnect Device by Remapping Traffic Flows (Forwarding Classes)" on page 343 for more information.)

- All multidestination traffic forwarding classes that you create are mapped to the **fabric_fcset_multicast1** fabric fc-set.
- All **strict-high** priority traffic and **network-control** forwarding classes that you create are mapped to the **fabric_fcset_strict_high** fabric fc-set.

Fabric Forwarding Class Set Configuration and Implementation

You can map forwarding classes to fabric fc-sets and configure CoS scheduling for fabric fc-sets. This section describes:

- Mapping Forwarding Classes to Fabric Forwarding Class Sets on page 334
- Fabric Forwarding Class Set Implementation on page 335

Mapping Forwarding Classes to Fabric Forwarding Class Sets

If you do not want to use the default mapping of forwarding classes to fabric fc-sets, you can map forwarding classes to fabric fc-sets in the same way as you map forwarding classes to Node device fc-sets. To do this, use exactly the same statement that you use

 Copyright © 2018, Juniper Networks, Inc.

to map forwarding classes to fc-sets, but instead of specifying a Node device fc-set name, specify a fabric fc-set name.

NOTE: The global mapping of forwarding classes to fabric fc-sets does not affect the mapping of forwarding classes to Node device fc-sets. The global forwarding class mapping to fabric fc-sets pertains to the traffic only when it enters, traverses, and exits the fabric. The forwarding class mapping to fc-sets on a Node device is valid within that Node device.

Mapping forwarding classes to fabric fc-sets does not affect the scheduling configuration of the forwarding classes or fc-sets on Node devices. Fabric fc-set scheduling pertains to traffic only when it enters, traverses, and exits the Interconnect device fabric.

If you change the mapping of a forwarding class to a fabric fc-set, the new mapping is global and applies to all traffic in that forwarding class, regardless of which Node device forwards the traffic to the Interconnect device.

- To assign one or more forwarding classes to a fabric fc-set:

  ```
  [edit class-of-service]
  user@switch# set forwarding-class-sets fabric-forwarding-class-set-name class
  forwarding-class-name
  ```

  For example, to map a user-defined forwarding class named **best-effort-2** to the fabric fc-set **fabric_fcset_be**:

  ```
  [edit class-of-service]
  user@switch# set forwarding-class-sets fabric_fcset_be class best-effort-2
  ```

NOTE: Because fabric fc-set configuration is global, in this example all forwarding classes with the name **best-effort-2** on all of the Node devices connected to the fabric use the **fabric_fcset_be** fabric fc-set to transport traffic across the fabric.

Fabric Forwarding Class Set Implementation

The following rules apply to fabric fc-sets:

- You cannot create new fabric fc-sets. Only the twelve default fabric fc-sets are available.
- You cannot delete a default fabric fc-set.
- You cannot attach a fabric fc-set to a Node device interface. Fabric fc-sets are used only on the Interconnect device fabric, not on Node devices.
- You can map only multidestination forwarding classes to multidestination fabric fc-sets.

- You cannot map multidestination forwarding classes to unicast fabric fc-sets.
- You cannot map unicast forwarding classes to multidestination fabric fc-sets.

QFabric System CoS

When traffic enters and exits the same QFabric system Node device, CoS works the same as it works on a standalone switch.

However, when traffic enters a QFabric system Node device, crosses the Interconnect device, and then exits a different Node device, CoS is applied differently:

1. Traffic entering the ingress Node device receives the CoS configured at the Node ingress (packet classification and congestion notification profile for PFC).

2. When traffic goes from the ingress Node device to the Interconnect device, the fabric fc-set CoS is applied to the traffic.

3. When traffic goes from the Interconnect device to the egress Node device, the egress Node device applies CoS at the egress port (egress queue scheduling, WRED, and IEEE 802.1p or DSCP code-point rewrite).

Traffic that traverses the Interconnect device can use the default CoS fabric scheduling or you can configure two-tier hierarchical CoS scheduling explicitly on fabric fc-sets as described in "Understanding CoS Scheduling Across the QFabric System" on page 276.

Support for Flow Control and Lossless Transport Across the Fabric

The Interconnect device incorporates flow control mechanisms to support lossless transport during periods of congestion on the fabric. To support the priority-based flow control (PFC) feature on the Node devices, the fabric interfaces use LLFC to support lossless transport for up to six IEEE 802.1p priorities when the following two configuration constraints are met:

1. The IEEE 802.1p priority used for the traffic that requires lossless transport is mapped to a lossless forwarding class on the Node devices.

2. The lossless forwarding class must be mapped to a lossless fabric fc-set on the Interconnect device (**fabric_fcset_noloss1**, **fabric_fcset_noloss2**, **fabric_fcset_noloss3**, **fabric_fcset_noloss4**, **fabric_fcset_noloss5**, or **fabric_fcset_noloss6**).

When traffic meets the two configuration constraints, the fabric propagates the back pressure from the egress Node device across the fabric to the ingress Node device during periods of congestion. However, to achieve end-to-end lossless transport across the switch, you must also configure a congestion notification profile to enable PFC on the Node device ingress ports.

 Copyright © 2018, Juniper Networks, Inc.

For all other combinations of IEEE 802.1p priority to forwarding class mapping and all other combinations of forwarding class to fabric fc-set mapping, the congestion control mechanism is normal packet drop. For example:

- **Case 1**—If the IEEE 802.1p priority **5** is mapped to the lossless **fcoe** forwarding class, and the **fcoe** forwarding class is mapped to the **fabric_fcset_noloss1** fabric fc-set, then the congestion control mechanism is PFC.
- **Case 2**—If the IEEE 802.1p priority **5** is mapped to the lossless **fcoe** forwarding class, and the **fcoe** forwarding class is mapped to the **fabric_fcset_be** fabric fc-set, then the congestion control mechanism is packet drop.
- **Case 3**—If the IEEE 802.1p priority **5** is mapped to the lossless **no-loss** forwarding class, and the **no-loss** forwarding class is mapped to the **fabric_fcset_noloss2** fabric fc-set, then the congestion control mechanism is PFC.
- **Case 4**—If the IEEE 802.1p priority **5** is mapped to the lossless **no-loss** forwarding class, and the **no-loss** forwarding class is mapped to the **fabric_fcset_be** fabric fc-set, then the congestion control mechanism is packet drop.
- **Case 5**—If the IEEE 802.1p priority **5** is mapped to the **best-effort** forwarding class, and the **best-effort** forwarding class is mapped to the **fabric_fcset_be** fabric fc-set, then the congestion control mechanism is packet drop.
- **Case 6**—If the IEEE 802.1p priority **5** is mapped to the **best-effort** forwarding class, and the **best-effort** forwarding class is mapped to the **fabric_fcset_noloss1** fabric fc-set, then the congestion control mechanism is packet drop.

NOTE: Lossless transport across the fabric also must meet the following two conditions:

1. The maximum cable length between the Node device and the Interconnect device is a 150 meters of fiber cable.
2. The maximum frame size is 9216 bytes.

If the MTU is 9216 KB, in some cases the QFabric system supports only five lossless forwarding classes instead of six lossless forwarding classes because of headroom buffer limitations.

The number of IEEE 802.1p priorities (forwarding classes) the QFabric system can support for lossless transport across the Interconnect device fabric depends on several factors:

- Approximate fiber cable length—The longer the fiber cable that connects Node device fabric (FTE) ports to the Interconnect device fabric ports, the more data the connected ports need to buffer when a pause is asserted. (The longer the fiber cable, the more frames are traversing the cable when a pause is asserted. Each port must be able to store all of the “in transit” frames in the buffer to preserve lossless behavior and avoid dropping frames.)

- MTU size—The larger the maximum frame sizes the buffer must hold, the fewer frames the buffer can hold. The larger the MTU size, the more buffer space each frame consumes.
- Total number of Node device fabric ports connected to the Interconnect device—The higher the number of connected fabric ports, the more headroom buffer space the Node device needs on those fabric ports to support the lossless flows that traverse the Interconnect device. Because more buffer space is used on the Node device fabric ports, less buffer space is available for the Node device access ports, and a lower total number of lossless flows are supported.

The QFabric system supports six lossless priorities (forwarding classes) under most conditions. The priority group headroom that remains after allocating headroom to lossless flows is sufficient to support best-effort and multidestination traffic.

Table 71 on page 274 shows how many lossless priorities the QFabric system supports under different conditions (fiber cable lengths and MTUs) in cases when the QFabric system supports fewer than six lossless priorities. The number of lossless priorities is the same regardless of how many Node device FTE ports are connected to the Interconnect device. However, the higher the number of FTE ports connected to the Interconnect device, the lower the number of total lossless flows supported. In all cases that are not shown in Table 71 on page 274, the QFabric system supports six lossless priorities.

NOTE: The system does not perform a configuration commit check that compares available system resources with the number of lossless forwarding classes configured. If you commit a configuration with more lossless forwarding classes than the system resources can support, frames in lossless forwarding classes might be dropped.

Table 82: Lossless Priority (Forwarding Class) Support for Node Devices When Fewer than Six Lossless Priorities Are Supported

MTU in Bytes	Fiber Cable Length in Meters (Approximate)	Maximum Number of Lossless Priorities (Forwarding Classes) on the Node Device
9216 (9K)	100	5
9216 (9K)	150	5

NOTE: The total number of lossless flows decreases as resource consumption increases. For a Node device, the higher the number of FTE ports connected to the Interconnect device, the larger the MTU, and the longer the fiber cable length, the fewer total lossless flows the QFabric system can support.

Copyright © 2018, Juniper Networks, Inc.

Viewing Fabric Forwarding Class Set Information

You can display information about fabric fc-sets using the same CLI command you use to display information about Node device fc-sets:

```
user@switch> show class-of-service forwarding-class-set
Forwarding class set: fabric_fcset_be, Type: fabric-type, Forwarding class set
index: 1
  Forwarding class                        Index
  best-effort                               0

Forwarding class set: fabric_fcset_mcast1, Type: fabric-type, Forwarding class
set index: 5
  Forwarding class                        Index
  mcast                                     8

Forwarding class set: fabric_fcset_mcast2, Type: fabric-type, Forwarding class
set index: 6

Forwarding class set: fabric_fcset_mcast3, Type: fabric-type, Forwarding class
set index: 7

Forwarding class set: fabric_fcset_mcast4, Type: fabric-type, Forwarding class
set index: 8

Forwarding class set: fabric_fcset_noloss1, Type: fabric-type, Forwarding class
set index: 2
  Forwarding class                        Index
  fcoe                                      1

Forwarding class set: fabric_fcset_noloss2, Type: fabric-type, Forwarding class
set index: 3
  Forwarding class                        Index
  no-loss                                   2

Forwarding class set: fabric_fcset_noloss3, Type: fabric-type, Forwarding class
set index: 9

Forwarding class set: fabric_fcset_noloss4, Type: fabric-type, Forwarding class
set index: 10

Forwarding class set: fabric_fcset_noloss5, Type: fabric-type, Forwarding class
set index: 11

Forwarding class set: fabric_fcset_noloss6, Type: fabric-type, Forwarding class
set index: 12

Forwarding class set: fabric_fcset_strict_high, Type: fabric-type, Forwarding
class set index: 4
  Forwarding class                        Index
  network-control                           3
```

Table 83 on page 340 describes the meaning of the **show class-of-service forwarding-class-set** output fields when you display fabric fc-set information.

Table 83: show class-of-service forwarding-class-set Command Output Fields

Field Name	Field Description
Forwarding class set	Name of the fabric forwarding class set.
Type	Type of forwarding class set: • Fabric-type—Fabric fc-set • Normal-type—Node device fc-set
Forwarding class set index	Index of this forwarding class set.
Forwarding class	Name of a forwarding class.
Index	Index of the forwarding class.

Summary of Fabric Forwarding Class Set and Node Device Forwarding Class Set Differences

Table 84 on page 340 summarizes the differences between fabric fc-sets and fc-sets:

Table 84: Summary of Differences Between Fabric fc-sets and Local fc-sets

Characteristic	Fabric fc-set	Local fc-set
Location	QFX3008-I or QFX3600-I Interconnect device (the fabric).	QFabric Node device.
Global or local	Global, valid for the entire fabric.	Local to the Node device on which the fc-set is configured.
Ability to create (define) a new fc-set	No. Use the 12 default fabric fc-sets provided.	Yes.
Ability to configure CoS	User-configurable using fabric fc-set scheduler maps.	User-configurable using traffic control profiles.
Ability to map forwarding classes to an fc-set	Yes. Mapping is global and applies to all forwarding classes across the Interconnect device fabric (traffic from all connected Node devices).	Yes. Mapping is local to a Node device and applies only to the forwarding classes on the Node device.

Related Documentation

- Understanding CoS Forwarding Class Sets (Priority Groups) on page 118
- Understanding CoS Scheduling Across the QFabric System on page 276
- Understanding CoS Scheduling on QFabric System Node Device Fabric (fte) Ports on page 149
- Understanding Default CoS Scheduling on QFabric System Interconnect Devices (Junos OS Release 13.1 and Later Releases) on page 265
- Understanding How to Mitigate Fate Sharing on a QFabric System Interconnect Device by Remapping Traffic Flows (Forwarding Classes) on page 343

Copyright © 2018, Juniper Networks, Inc.

- Defining CoS Forwarding Class Sets on page 120
- Example: Configuring Forwarding Class Sets on page 120
- Example: Configuring CoS Scheduling Across the QFabric System on page 297
- **show class-of-service forwarding-class-set on page 836**

Configuring CoS Fabric Forwarding Class Set Scheduler Maps (Fabric Scheduler to Fabric FC-Set Mapping)

Fabric forwarding class set scheduler maps map fabric fc-sets to fabric schedulers, much the same way that scheduler maps on Node devices map fc-sets to schedulers. Each fabric fc-set represents an output queue on the Interconnect device interfaces, and each fabric forwarding class set scheduler sets bandwidth scheduling and other CoS properties.

When you map a fabric fc-set to a fabric scheduler, the fabric scheduler CoS properties determine the port bandwidth resources that the fabric fc-set traffic receives. You associate the fabric forwarding class set scheduler map a fabric interface to apply the scheduling properties to the traffic in the fabric fc-set on that fabric interface.

Using different fabric scheduler forwarding class set maps, you can map different schedulers to the same traffic (the same fabric fc-set) so that you can apply different scheduling to the traffic on different interfaces.

You can associate one fabric forwarding class set scheduler map to a fabric interface. Each fabric forwarding class scheduler map can contain multiple schedulers mapped to multiple fabric fc-sets.

Before you begin, you need to configure one or more fabric schedulers to map to fabric fc-sets. If you do not configure fabric schedulers, the system uses the default fabric schedulers and the default fabric forwarding class set scheduler mapping to fabric fc-sets.

To configure a fabric forwarding class set scheduler map using the CLI, define a name for the fabric forwarding class set scheduler map, and specify the fabric fc-set and fabric scheduler that you are mapping:

- `[edit class-of-service]`
  `user@switch#` **set scheduler-map-forwarding-class-sets** ***fabric-scheduler-map-name*** **forwarding-class-set** ***fabric-fc-set-name*** **scheduler** ***fabric scheduler-name***

  For example, to configure a fabric scheduler map named **fab-be-map** that has a fabric fc-set named **fabric_fcset_be** mapped to fabric scheduler **fab-be-sched**:

  ```
  [edit class-of-service]
  user@switch# set scheduler-map-forwarding-class-sets fab-be-map forwarding-class-set
  fabric_fcset_be scheduler fab-be-sched
  ```

Related Documentation

- Example: Configuring Queue Schedulers on page 169
- Example: Configuring CoS Scheduling Across the QFabric System on page 297

- Understanding CoS Scheduling Across the QFabric System on page 276
- Understanding CoS Scheduling on QFabric System Node Device Fabric (fte) Ports on page 149
- Understanding Default CoS Scheduling on QFabric System Interconnect Devices (Junos OS Release 13.1 and Later Releases) on page 265
- Understanding CoS Fabric Forwarding Class Sets on page 330

Copyright © 2018, Juniper Networks, Inc.

Understanding How to Mitigate Fate Sharing on a QFabric System Interconnect Device by Remapping Traffic Flows (Forwarding Classes)

On a QFabric system, traffic either is switched locally on a Node device (traffic enters and exits the same Node device without crossing the Interconnect device), or is switched remotely, across the Interconnect device. Traffic flows that belong to the same forwarding class are mapped to the same output queue and share the output queue resources. If congestion occurs on one of these flows, the congestion can affect the uncongested flows in the forwarding class when the flows use the same ingress interface.

For example, if a congested flow is paused to prevent packet loss, uncongested flows that use the same ingress interface are also paused because they share the same forwarding class and output queue. When a congested flow affects an uncongested flow, the flows share the same fate—this is known as fate sharing.

Fate sharing happens because pausing traffic is based on forwarding class. When a flow experiences congestion, the output queue sends a pause message to the input queue on which the flow arrived. On that input queue, the pause message affects all traffic in the forwarding class that is mapped to the congested output queue. So all traffic in that forwarding class is paused on the input queue, not just the flow that is experiencing the congestion. This is how uncongested flows can share fate with a congested flow.

Traffic from many QFabric system Node devices crosses the Interconnect device, so flows within a given forwarding class are aggregated on the Interconnect device. The aggregated flows use the same output queue on the Interconnect device and are subject to fate sharing if the flows also use the same ingress interface.

In addition to the external physical interfaces that connect the Interconnect device to Node devices, the Interconnect device has internal Clos interfaces. The Interconnect device automatically selects the best path through its internal Clos interfaces. Path selection through the internal Clos interfaces is not configurable, so you cannot control the traffic that enters any particular ingress Clos interface, and so fate sharing can occur on the Interconnect device. (On Node devices, you control the traffic connected to an ingress interface, but on the Interconnect device, you cannot control which flows use a particular internal ingress Clos interface.)

However, to mitigate fate sharing on the Interconnect device, you can use firewall filters to separate the traffic in one forwarding class and split it into different forwarding classes. Remapping the flows into different forwarding classes means the flows use different output queues on the Interconnect device. If the flows use the same ingress interface on the Interconnect device, they do not experience fate sharing because only the flows mapped to the congested queue are paused, while the flows remapped to other forwarding classes (remapped to different queues) are not paused.

Copyright © 2018, Juniper Networks, Inc.

Mitigating fate sharing is often useful for lossless flows such as storage traffic, but is not limited to lossless flows. You can remap forwarding classes to mitigate fate sharing on the Interconnect device to separate flows that belong to any application (for example, iSCSI, NAS, FCoE, and so on), even when the flows are in the same VLAN.

- Fate Sharing on the Interconnect Device on page 344
- Scenario 1: How Fate Sharing Can Occur on a QFabric System Interconnect Device on page 346
- Scenario 2: How Forwarding Class Remapping Mitigates Fate Sharing on a QFabric System Interconnect Device on page 348
- Fate Sharing Mitigation Process on page 350
- Best Practices on page 362
- Limitations and Notes on Behavior on page 363

Fate Sharing on the Interconnect Device

Fate sharing can occur when multiple flows use the same output queue (the flows are mapped to the same forwarding class) and the same ingress interface. If the flows use the same ingress interface, then if one congested flow is paused, the uncongested flows in the same forwarding class are also paused at the shared ingress interface—the uncongested flows share fate with the congested flow. On an Interconnect device, the flows from many Node devices are aggregated, so the number of flows assigned to a given forwarding class and forwarded through a particular egress interface can be much greater on an Interconnect device than on a single Node device.

NOTE: **The possibility of fate sharing cannot be avoided on Node device ingress interfaces. If two servers access a Node device on the same ingress interface, and both servers send traffic flows that are classified into the same forwarding class (for example, if both flows are FCoE traffic and are classified into the *fcoe* forwarding class), then even if the flows are in different VLANs, congestion on one flow affects the other flow. The congested flow affects the uncongested flow because both flows share the same forwarding class (and therefore the same output queue and IEEE 802.1p code point), and priority-based flow control (PFC) is applied to the ingress interface, not to the VLAN. So when PFC pauses the congested flow on the ingress interface, the uncongested flow that uses the same code point is also paused.**

An example of fate sharing is when two Fibre Channel over Ethernet (FCoE) flows are in the same forwarding class (so they use the same output queue) and use the same Interconnect device ingress interface. If one of those flows experiences congestion and the other flow does not experience congestion, the congested flow can affect the uncongested flow. If backpressure forces the ingress interface to pause the congested FCoE flow, the uncongested FCoE flow is also paused because the two flows use the same forwarding class (output queue) and traffic in that forwarding class is paused on the ingress interface.

 Copyright © 2018, Juniper Networks, Inc.

Remapping flows that belong to the same forwarding class into different forwarding classes for transport across the Interconnect device mitigates fate sharing by separating the flows onto different output queues. Using different output queues means that the flows use different forwarding classes on the ingress interface. When a flow on one queue is paused, it does not affect flows that have been remapped onto other queues. The congestion only affects traffic on the paused queue, so the congestion only affects the congested forwarding class on the ingress interface.

After the traffic crosses the Interconnect device, the Node device on which the traffic egresses the QFabric system must map the traffic back to its original forwarding class before forwarding the traffic toward its destination, because the original forwarding class contains similar traffic, and is classified to support the CoS that the traffic type requires and the destination device expects.

For example, traffic destined for different targets in the same storage area network (SAN) normally should be in the same forwarding class, because a SAN uses one IEEE 802.1p code point (priority) to identify all traffic of a particular type, such as FCoE traffic. So when traffic destined for the SAN leaves the QFabric system, all of it must be mapped to the same forwarding class so that it uses the same IEEE 802.1p code point and is identified and classified the same way when it enters the SAN. This is why the QFabric system must map the traffic back into its original forwarding class after the traffic crosses the Interconnect device.

The QFabric system uses a firewall filter to remap traffic to a different forwarding class before it crosses the Interconnect device, and then map traffic back to its original forwarding class after it exits the Interconnect device.

The firewall filter must remap forwarding classes in each direction the traffic flows through the Interconnect device. For example, filter terms must remap traffic when it travels from a server to a target, and also when traffic travels from a target to a server. For each direction of traffic, you configure a filter term that maps traffic into a different forwarding class when it enters the Interconnect device, and a filter term that maps traffic back into its original forwarding class after it exits the Interconnect device.

As with all firewall filters, there is a default discard at the end of each filter rule, so if you do not want to discard all traffic that is not explicitly permitted, you should add a final term to accept traffic that is not affected by the other terms. This is especially important when you are not remapping all of the traffic in a VLAN.

The QFabric system supports up to six lossless traffic classes called fabric forwarding class sets (fabric fc-sets) on the Interconnect device. (You can also configure up to six lossless forwarding classes on a Node device.) Each fabric fc-set maps to a different output queue on the Interconnect device.

NOTE: Fabric fc-sets on the Interconnect device are analogous to forwarding classes on Node devices, in that both fabric fc-sets and forwarding classes map to output queues on their respective devices. However, more than one forwarding class can map to a fabric fc-set, so a fabric fc-set can aggregate forwarding classes on the Interconnect device.

Fabric fc-set names are not user-configurable, and you cannot configure new fabric fc-sets. You can configure forwarding class to fabric fc-set mapping, so each fabric fc-set transports the traffic that you want it to transport.

The six lossless fabric fc-sets enable you to separate traffic from Node devices into as many as six lossless traffic classes on the Interconnect device. Each fabric fc-set uses a different output queue, so the flows (forwarding classes) mapped to each fabric fc-set use different ingress interfaces, and the flows in one fabric fc-set do not share fate with flows in other fabric fc-sets.

In addition, there are four multidestination fabric fc-sets on the Interconnect to handle multicast, broadcast, and destination lookup fail traffic.

NOTE: **The flows (forwarding classes) within a fabric fc-set can share fate if they use the same ingress interface (the shared ingress interface could be an external 40-Gigabit interface or an internal Clos interface) because they use the same output queue, so they belong to the same forwarding class. However, the ability to separate flows into different forwarding classes enables you to spread the traffic among multiple output queues, and thus to mitigate the possibility of fate sharing because only traffic that belongs to the paused forwarding class (output queue) is paused on the ingress interface. Traffic remapped into other forwarding classes is not paused.**

Scenario 1: How Fate Sharing Can Occur on a QFabric System Interconnect Device

An example of traffic that might share fate across the Interconnect device is storage traffic. This scenario uses FCoE as an example.

NOTE: **Any type of traffic that shares the same forwarding class (output queue) and Interconnect device ingress interface can experience fate sharing.**

QFabric system Node devices aggregate FCoE traffic from connected ENodes. Because the FCoE traffic requires the same treatment across the network, in this scenario the FCoE traffic uses the same forwarding class on all of the Node devices (the default **fcoe** forwarding class), and is mapped to the same output queue on all of the Node devices. Because the Fibre Channel (FC) SAN usually expects traffic to have a priority value of 3 (IEEE 802.1p code point 011), priority 3 identifies all of the FCoE traffic.

All of the FCoE traffic that is not locally switched on the Node devices is remotely switched across the Interconnect device. A large amount of FCoE traffic might be switched across the Interconnect device, and all of that traffic uses the same egress queue. Whenever the FCoE flows use the same Interconnect device ingress interface, fate sharing can occur, as shown in Figure 16 on page 347.

 Copyright © 2018, Juniper Networks, Inc.

Figure 16: Fate Sharing Scenario: FCoE Traffic Shares Fate on the Interconnect Device

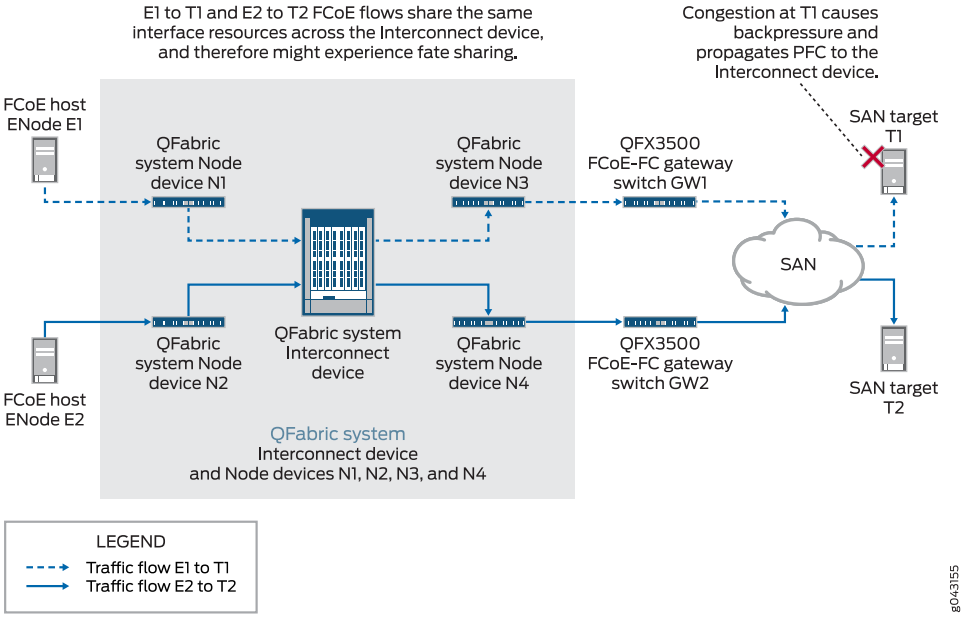

In Figure 16 on page 347, FCoE traffic flows from two FCoE hosts (ENode E1 and ENode E2) through the QFabric system and an FCoE-FC gateway switch to two storage target devices in the SAN (target T1 and target T2). Target device T1 is experiencing congestion. Target device T2 is not experiencing congestion, as shown by the red “X”.

The dotted line shows the path that FCoE traffic from ENode E1 takes, entering the QFabric system at ingress Node device N1, flowing through the Interconnect device to the egress Node device N3, exiting the QFabric system to FCoE-FC gateway switch GW1, entering the SAN, then finally reaching target T1.

The solid line shows the path that FCoE traffic from ENode E2 takes, entering the QFabric system at ingress Node device N2, flowing through the Interconnect device to the egress Node device N4, exiting the QFabric system to FCoE-FC gateway switch GW2, entering the SAN, then finally reaching target T2.

When FCoE traffic from hosts ENode E1 and ENode E2 crosses the Interconnect device, the flows from the two hosts might use the same ingress interface at any of the Interconnect device interface stages (external 40-Gigabit interfaces or internal Clos interfaces). If the flows use the same ingress interface at any point, the paths of the flows converge at that interface on the input queue instead of remaining separate. (The dotted line and the solid line can intersect if at any time they share a common Interconnect device ingress interface.) When traffic flows assigned to the same forwarding class use the same ingress interface, fate sharing can occur because the flows use the same output queue.

In this scenario, the flows from hosts E1 and E2 share an ingress interface as they cross the Interconnect device. When target T1 experiences congestion, it sends a pause message to temporarily stop the incoming flow until the congestion clears, in order to prevent

packet loss due to queue overfill. The pause message propagates back through the data path. Eventually, host E1 will receive a pause message and temporarily stop transmitting.

However, when the pause message reaches the Interconnect device ingress interface that the FCoE flows from hosts E1 and E2 share, not only is the flow originating from host E1 paused, the flow originating from host E2 is also paused, even though the E2 host flow is not experiencing congestion. Both flows are paused because both flows belong to the same forwarding class, and therefore use the same output queue, and use the same ingress interface. When the message pauses the E1-to-T1 flow, it also pauses the E2-to-T2 flow, because the all flows in the forwarding class are paused on the shared ingress interface, regardless of whether or not an individual flow in that forwarding class is experiencing congestion.

In this scenario, the uncongested FCoE flow from E2-to-T2 shares the same fate as the congested FCoE flow from E1-to-T1.

NOTE: **This FCoE traffic scenario is one example of fate sharing. Fate sharing can occur on any flows that are mapped to the same forwarding class (output queue) and use the same Interconnect device ingress interface.**

Scenario 2: How Forwarding Class Remapping Mitigates Fate Sharing on a QFabric System Interconnect Device

Fate sharing occurs when traffic flows are assigned to the same forwarding class (and therefore use the same output queue) and also use the same ingress interface. The trick to mitigating the effects of fate sharing is to do one of two things: either ensure that flows assigned to the same forwarding class use different ingress interfaces, or ensure that flows use different forwarding classes, so that if they use the same ingress interface, they use different egress queues on the interface.

Ensuring that flows assigned to the same forwarding class use different ingress interfaces is not possible because the Interconnect device automatically selects the best path through its internal Clos interfaces. You cannot configure the Interconnect device to route traffic along a particular path within the device. However, you can separate the traffic assigned to one forwarding class into multiple forwarding classes for the journey across the Interconnect device. Remapping the flows into different forwarding classes means the flows use different output queues, so if the flows use the same ingress interface, they will not experience fate sharing.

 Copyright © 2018, Juniper Networks, Inc.

Figure 17: Fate Sharing Mitigation Scenario: FCoE Traffic Avoids Fate Sharing on the Interconnect Device

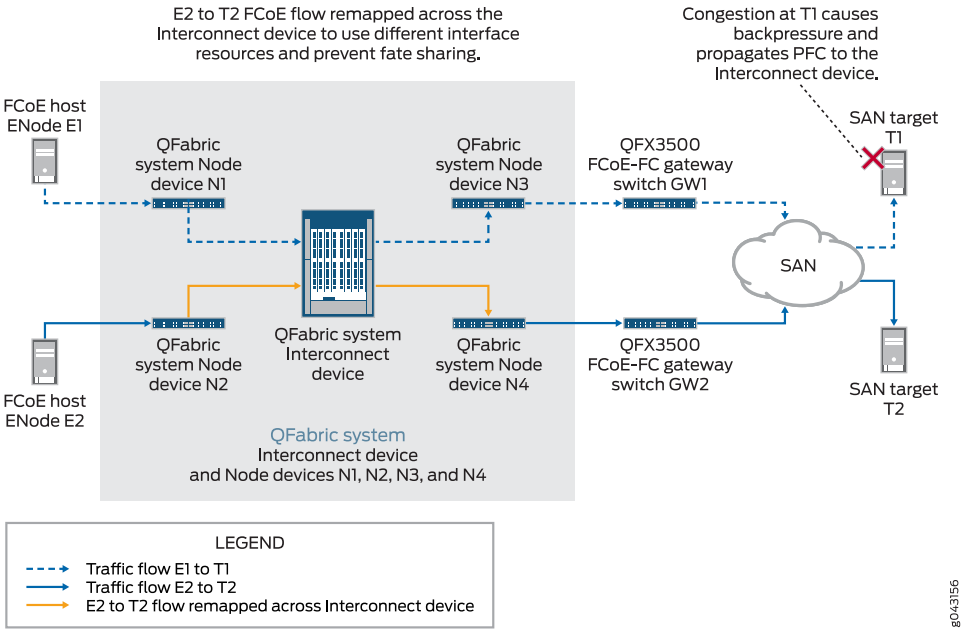

Figure 17 on page 349 is similar to Figure 16 on page 347, with one exception. There are still two FCoE traffic flows, one from host ENode E1 to SAN target T1, and one from host ENode E2 to SAN target T2. Target T1 is experiencing congestion, and target T2 is not experiencing congestion.

The difference is that the path from Node device N2 to the Interconnect device and from the Interconnect device to Node device N4 (yellow in color display, light gray in black and white display) indicates that the forwarding class has been remapped from the original **fcoe** default forwarding class into a different forwarding class.

As in the fate sharing scenario, the flows from hosts E1 and E2 share an ingress interface as they cross the Interconnect device. Also as in the fate sharing scenario, when target T1 experiences congestion, it sends a pause message to temporarily stop the incoming flow until the congestion clears, and the pause message propagates back through the data path.

However, unlike the flows in the fate sharing scenario, these flows use different output queues because the flows have been remapped into different forwarding classes for transit across the Interconnect device. Since the flows use different forwarding classes, they do not share fate on the shared ingress interface, and the uncongested flow from E2-to-T2 does not share the fate of the congested E1-to-T1 flow.

You configure a firewall filter to control how the forwarding classes are remapped before traffic exits the ingress Node device and crosses the Interconnect device. In the same firewall filter, you also configure terms to control how the remapped forwarding class is mapped back to its original forwarding class when traffic enters the egress Node device

after the traffic crosses the Interconnect device. The firewall filter requires terms for remapping forwarding class in both directions of flow. For example, the filters must remap the forwarding class not only in the E1-to-T1 direction, but also in the T1-to-E1 direction.

NOTE: If an ENode (FCoE device on the Ethernet network) is directly connected to a QFabric system Node device, and that Node device is directly connected to the FCoE-FC gateway by a LAG interface, then using firewall filters to mitigate fate sharing by remapping forwarding classes is not supported, so that traffic is not remapped.

On Node devices that have directly connected ENodes and that also connect directly to an FCoE-FC gateway using a LAG interface, configure the Node device interfaces in a different VLAN than the interfaces on which you want to mitigate fate sharing. In this scenario, interfaces on the Node device should not be in the same VLAN as interfaces on which you want to apply firewall filters to mitigate fate sharing.

If the interface between the Node device and the FCoE-FC gateway is not a LAG interface, then forwarding class remapping works when ENodes are directly connected to the Node device. The fate sharing mitigation feature does not work only when ENodes are directly connected to the Node device *and* the connection between the Node device and the FCoE-FC gateway is a LAG interface.

Fate Sharing Mitigation Process

The following sequence summarizes the packet flow and the QFabric system operations for mitigating fate sharing:

1. A packet enters a QFabric system ingress Node device. The ingress Node device classifies the packet into a forwarding class, usually based on its IEEE 802.1p code point (priority).

2. The Node device switching lookup determines that the packet needs to traverse the Interconnect device.

3. On the Node device, a firewall filter remaps the packet from its original forwarding class into a different forwarding class.

4. The packet exits the Node device and enters the Interconnect device, using the new (remapped) forwarding class. On the Interconnect device, the new forwarding class is mapped to a different fabric fc-set, and therefore to a different output queue, than the original forwarding class, so it does not share fate with traffic in the original forwarding class on ingress interfaces. (Each fabric fc-set maps to a different output queue by default, so placing traffic in a different fabric fc-set allows that traffic to use different output queue bandwidth resources than traffic that is mapped to other fabric fc-sets.) The packet crosses the Interconnect device, and then exits.

Copyright © 2018, Juniper Networks, Inc.

5. The packet arrives at the egress Node device. At the Node device ingress interface, the same firewall filter remaps the packet from the new forwarding class back into the original forwarding class.

   This process remaps the traffic into a different forwarding class for the journey across the Interconnect device, and then maps the traffic back into its original forwarding class to continue the journey to its destination.

6. The egress Node device forwards the packet toward its destination. Because the packet has been mapped back to its original forwarding class, it once again receives the same CoS treatment as similar traffic that was not remapped across the Interconnect device. It is important to map traffic back to its original forwarding class before forwarding traffic toward its destination because the original forwarding class contains similar traffic, and is configured to support the CoS that the traffic type requires and the destination device expects.

NOTE: **If you configure non-default forwarding classes and use non-default fabric fc-sets, you must also configure queue scheduling for the new forwarding classes on the Node device and for the non-default fabric fc-sets on the Interconnect device.**

Mitigating fate sharing consists of configuration steps that create the necessary forwarding classes and firewall filters, apply the firewall filters to traffic, map the forwarding classes to fabric fc-sets on the Interconnect device, and schedule port bandwidth resources (if needed) for the forwarding classes and fabric fc-sets.

- Forwarding Classes (Node Devices) on page 351
- Firewall Filter Construction (Node Devices) on page 352
- Applying Firewall Filters to Traffic (Node Devices) on page 356
- Mapping Forwarding Classes to Fabric Forwarding Class Sets (Interconnect Device) on page 358
- Scheduling Bandwidth for Fabric Forwarding-Class Sets (Interconnect Device) on page 360
- Multidestination Traffic (FCoE Initialization Protocol Traffic) on page 360

Forwarding Classes (Node Devices)

If you have only a few flows that you want to separate for transit across the Interconnect device, and the default forwarding classes provide enough separation to avoid fate sharing, you do not need to configure new forwarding classes. There are five default forwarding classes on a QFabric system:

- fcoe—Guaranteed delivery for Fibre Channel over Ethernet (FCoE) traffic.
- no-loss—Guaranteed delivery for TCP lossless traffic.
- best-effort—Provides best-effort delivery without a service profile. Loss priority is typically not carried in a class-of-service (CoS) value.

- network-control—Supports protocol control and is typically high priority.
- mcast—Provides service for multidestination (multicast, broadcast, and destination lookup fail) packets.

For example, if you want to separate FCoE traffic into two separate flows on the Interconnect device, and you are not using the **no-loss** forwarding class for other traffic, you can remap some of the FCoE traffic to the **no-loss** forwarding class and leave the rest in the **fcoe** forwarding class. If this provides sufficient separation of flows, you do not need to create new forwarding classes.

Using the existing default forwarding classes has two more time-saving advantages:

1. You do not need to map the forwarding class to a fabric fc-set on the Interconnect device, because each default forwarding class is already mapped to a default fabric fc-set.
2. You do not need to schedule port bandwidth resources for a new forwarding class on the Node device or for the fabric fc-set on the Interconnect device, because each default forwarding class and fabric fc-set already has a default port bandwidth allocation.

However, if the default forwarding classes are not sufficient, you can configure up to eight unicast forwarding classes (including the four default forwarding classes) and up to four multidestination forwarding classes (including the default **mcast** forwarding class). You can configure up to six of the unicast forwarding classes as lossless forwarding classes. Lossless transport is not supported on multidestination queues.

For more information about forwarding classes, see "Understanding CoS Forwarding Classes" on page 104. For an example of how to configure forwarding classes, see "Defining CoS Forwarding Classes" on page 111.

NOTE: Configuring a new forwarding class includes mapping an output queue to that forwarding class. When you configure a new forwarding class, you also need to configure scheduling resources (output queue bandwidth) for the new forwarding class. When the fate mitigation firewall filter separates traffic flows in a VLAN and assigns all or some of those flows to the new forwarding class, if the output queue mapped to the new forwarding class does not receive bandwidth, traffic cannot be forwarded. For more information about scheduling on Node devices, see "Understanding CoS Output Queue Schedulers" on page 159, "Understanding CoS Priority Group Scheduling" on page 184, and "Understanding CoS Hierarchical Port Scheduling (ETS)" on page 192.

Firewall Filter Construction (Node Devices)

Fate sharing mitigation uses firewall filters to separate traffic before the traffic crosses the Interconnect device, and to bring that traffic back together after it exits the Interconnect device. The QFabric system uses firewall filters to identify (match) traffic

 Copyright © 2018, Juniper Networks, Inc.

and remap forwarding classes because firewall filter match conditions are granular enough to easily identify and separate (filter) particular traffic flows within a VLAN.

NOTE: **You can configure firewall filters for fate sharing mitigation only in the firewall family ethernet-switching hierarchy. You cannot configure firewall filters to mitigate fate sharing in the inet (IPv4) or inet6 (IPv6) firewall family hierarchies.**

You bind firewall filters for fate sharing mitigation to ingress VLANs as input filters (later in this document is an explanation of why ingress VLANs are the filter bind point). Each firewall filter consists of terms that contain match conditions to identify traffic, and actions to perform on the matched traffic. For more information about firewall filters, see *Overview of Firewall Filters*.

The firewall filter terms:

1. Remap some or all of the traffic in one forwarding class into another forwarding class before that traffic exits an ingress Node device to go to the Interconnect device. This separates traffic flows before they traverse the Interconnect device, so the traffic uses different output queues and does not experience fate sharing if the traffic in the different forwarding classes uses the same ingress interface.
2. Map the remapped traffic back into its original forwarding class after it exits the Interconnect device, when the traffic enters egress Node device. This brings the traffic flows back into their original forwarding class and classification before the traffic is forwarded toward its destination.

NOTE: **Each firewall filter requires terms to remap the forwarding class in *both* directions of flow through the Interconnect device. For example, the forwarding class needs to be remapped on the Interconnect device as traffic flows from a source server to a destination target, and the forwarding class also needs to be remapped on the Interconnect device as traffic flows back from the target to the server.**

Firewall filter terms contain match conditions (**from** statement) to identify traffic, and actions (**then** statement) to tell the system what to do with the identified traffic.

Each forwarding class remapping firewall filter uses match conditions to identify a particular traffic flow to remap, and match conditions to identify the direction of flow on the Interconnect device. Each fate sharing mitigation firewall filter includes terms that:

1. Identify and remap traffic flowing from the server to the target before it enters the Interconnect device.
2. Identify and remap traffic flowing from the server to the target after it exits the Interconnect device.
3. Identify and remap traffic flowing from the target to the server before it enters the Interconnect device.

4. Identify and remap traffic flowing from the target to the server after it exits the Interconnect device.
5. Accept other traffic. Because firewall filters have an implicit default *discard* terminating action, include a final *accept* term so that traffic that does not match the filter is not dropped.

You can use the following match conditions in the filter term **from** statement to identify traffic that you want to remap as it crosses the Interconnect device:

- Client-side MAC address (for example, an FCF MAC address for FCoE traffic) (**destination-mac-address** ***mac-address***) or (**source-mac-address** ***mac-address***)
- Server-side MAC address (for example, an ENode MAC address for FCoE traffic) (**destination-mac-address** ***mac-address***) or (**source-mac-address** ***mac-address***)
- EtherType (**ether-type** ***value***)

NOTE: If you remap an FCoE flow using EtherType as a match condition, you need to include two terms in the filter in each direction of flow to identify the traffic, one term to identify FCoE traffic (EtherType 0x8906), and one term to identify FIP traffic (EtherType 0x8914).

- VLAN (**vlan (*vlan-name* | *vlan-id*)**)
- .1q user priority (**dot1q-user-priority** ***value***)

These five match conditions select the traffic from within a VLAN that you want to map to a different forwarding class. The match conditions enable you to identify traffic in VLANs that carry a mix of traffic types—for example, you can identify a flow within a VLAN based on EtherType or .1q value. For more information about match conditions, see *Firewall Filter Match Conditions and Actions*.

BEST PRACTICE: For FCoE traffic, we recommend that you use the FCF MAC address (instead of the ENode MAC address) as the source or destination address when you configure a firewall filter, because an ENode might be able to reach more than one FCF. Using the FCF MAC is the most specific way to identify the correct path for the traffic.

NOTE: You cannot match on multicast addresses based on prefix. You must use a specific multicast address as the source or destination address.

In the same filter term **from** statement, you specify a match condition to determine whether you are identifying traffic that is flowing from a Node device into the Interconnect device, or traffic that is flowing from the Interconnect device to a Node device:

- **to-fabric <except>**—This condition matches traffic that flows from a Node device to an Interconnect device (traffic that is exiting a Node device and entering the

 Copyright © 2018, Juniper Networks, Inc.

Interconnect device). Traffic that matches the **to-fabric** condition is remapped before it exits the ingress Node device and enters the Interconnect device.

The **except** option remaps forwarding classes for traffic that is locally switched. For example, if a target device is directly connected to a Node device, the traffic destined for the directly connected target is remapped to the new forwarding class. When you specify the **except** option, traffic that is remotely switched is *not* remapped to a new forwarding class before it crosses the Interconnect device.

- **from-fabric**—This condition matches traffic that flows from the Interconnect device to a Node device (traffic that is exiting the Interconnect device and entering the egress Node device). Traffic that matches the **from-fabric** condition is mapped back to its original forwarding class after it exits the Interconnect device, when it enters the egress Node device.

BEST PRACTICE: **In a firewall filter configuration, if you use a to-fabric except match condition, place it before the from-fabric term in the sequence of terms in the filter.**

After you configure match conditions in a filter term, you configure an action to take on the identified (matched) traffic in the same term. Because the goal is to remap traffic in one forwarding class into a different forwarding class, the action is usually to place the matched traffic into a forwarding class.

Use the following actions (**then** statement) to control into which forwarding class the matched traffic is remapped in a given term:

- **forwarding-class** ***forwarding-class-name***—Specify a default or a user-defined forwarding class into which matching traffic is mapped.
- **loss-priority** ***level***—If you specify a forwarding class for matching traffic, you must also specify the packet loss priority (PLP) level for the forwarding class. The PLP level can be **low**, **medium-high**, or **high**.
- **count** ***counter-name***—Optionally, you can configure an action to count the number of packets affected by each term.

NOTE: **You can use the match conditions to identify a traffic flow, and then count the packets without remapping the forwarding class. To do that, in the then statement, do not include the forwarding class and loss priority, include only the count action.**

Applying Firewall Filters to Traffic (Node Devices)

You apply (bind) firewall filters for fate sharing mitigation to ingress VLANs, not to ports. (Firewall filters for mitigating fate sharing do not apply to VLANs on the egress side.) Applying the firewall filter to an ingress VLAN has advantages compared to applying the firewall filter to a port:

- The filter affects all of the matched traffic on all interfaces that are members of the VLAN, on all Node devices on the QFabric system. Instead of applying the firewall filter to individual ports or ranges of ports on each Node device, you only have to apply the firewall filter once to the VLAN.
- VLANs usually carry similar types of traffic.

You bind firewall filters to ingress VLANs as input filters using the **set vlans *vlan-name* filter input *filter-name*** configuration statement. See *Configuring Firewall Filters* for more information about configuring and applying firewall filters.

BEST PRACTICE: Place traffic of one type in one VLAN (use separate VLANs for each different type of traffic). We recommend that you do not mix different types of traffic in the same VLAN. The QFabric system requires that a VLAN that carries FCoE traffic must carry only FCoE traffic. However, it is a good practice to do the same thing with other types of traffic. For example, if your network carries both iSCSI and NAS traffic, we recommend that you dedicate one VLAN to iSCSI traffic, and one VLAN to NAS traffic (and so on). You can configure separate firewall filters to mitigate fate sharing for each type of traffic.

Copyright © 2018, Juniper Networks, Inc.

NOTE: Because firewall filters for mitigating fate sharing are applied to VLANs, and not to ports, there are several behaviors you should be aware of:

- If more than one VLAN uses a port, the firewall filter applies only to the traffic in the VLAN on which you applied the firewall filter. Traffic in other VLANs might be exposed to fate sharing on the Interconnect device.
- The ports on which the firewall filter is applied depend on VLAN membership. If ports on multiple Node devices are members of the VLAN, then the firewall filter remaps traffic on the VLAN member ports of all of those Node devices. If you want to remap traffic on only one Node device, then the VLAN member interfaces should all be on that Node device, and not on other Node devices. (Configuring a VLAN that includes member interfaces from only one Node device enables you to remap traffic on that Node device independently from other Node devices.)
- Although firewall filters mitigate fate sharing on the Interconnect device, they do not mitigate fate sharing on a Node device. This is because PFC is applied to specified queues on a port, not to a VLAN. (Recall that forwarding classes are mapped to queues, so all traffic in the same forwarding class uses the same queue, regardless of VLAN membership.)

  An example scenario is two VLANs that contain FCoE traffic that is classified into the **fcoe** forwarding class and use an ingress interface on the same Node device. The **fcoe** forwarding class is classified to IEEE 802.1p code point 011 (priority 3) to identify the FCoE traffic on both VLANs (because all of the FCoE traffic requires the same CoS treatment and all of the traffic is destined for the same SAN), and so both VLANs use the same output queue.

  If FCoE traffic in one of the VLANs experiences congestion, PFC is enabled on the flow, and the flow is paused until the congestion clears. Because the FCoE traffic in the other VLAN uses the same output queue (forwarding class), when the congested FCoE flow is paused on the ingress interface, all FCoE traffic that uses that ingress interface is also paused. In this way, the congested FCoE flow affects the uncongested FCoE flow, and the two flows share the same fate.

  So if two servers on the same Node device ingress port send traffic that belongs to the same forwarding class (in this example, **fcoe**), they can experience fate sharing on the Node device.

WARNING: Do not apply firewall filters that remap forwarding classes while traffic that the filters affect is flowing!

For forwarding class remapping to work properly, traffic must be mapped from its original forwarding class to a new forwarding class before it enters the Interconnect device, and then mapped back to the original forwarding class after it exits the Interconnect. If traffic is not mapped back into its

original forwarding class after crossing the Interconnect device, traffic is classified into the wrong forwarding class and is not delivered as expected. Because of this, the QFabric system must program the filters on the ingress Node device and the egress Node device when affected traffic is not flowing.

If traffic is flowing when you apply the filters to a VLAN, and the ingress Node device filter is programmed before the egress Node device filter is programmed, traffic is not remapped back into its original forwarding class until the egress Node device filter is applied. For this reason, apply filters only when affected traffic is not flowing through the QFabric system.

Mapping Forwarding Classes to Fabric Forwarding Class Sets (Interconnect Device)

The five default forwarding classes (**best-effort**, **fcoe**, **no-loss**, **network-control**, and **mcast**, see "Forwarding Classes (Node Devices)" on page 351) are mapped by default to fabric fc-sets on the Interconnect device. If you are using only default forwarding classes on the Node devices, then you do not need to map forwarding classes to fabric fc-sets, you can use the default mapping.

If you create new (user-defined) forwarding classes on a Node device, you must map the new forwarding classes to fabric fc-sets on the Interconnect device. (If you do not map a new forwarding class to a fabric fc-set on the Interconnect device, the traffic that belongs to the new forwarding class receives very little bandwidth on the Interconnect device.)

Each fabric fc-set maps to a different output queue on the Interconnect device by default, much like each forwarding class maps to a different output queue by default on Node devices. Mapping a new forwarding class to a non-default (unused) fabric fc-set causes the traffic assigned to that forwarding class to use a different output queue on the Interconnect device. (The traffic in the new forwarding class uses a different output queue than traffic mapped to other fabric fc-sets.)

Also similar to forwarding classes on Node devices, there are five default fabric fc-sets on the Interconnect device, and twelve total fabric fc-sets, eight of which are unicast fabric fc-sets, and four of which are multidestination fabric fc-sets. Each default forwarding class has a default mapping to one of the default fabric fc-sets. The non-default fabric fc-sets are hidden until you map forwarding classes to them, but are available for use.

The five default forwarding classes are mapped to the five default fabric fc-sets as shown in Table 85 on page 358 (you can reconfigure the mapping of default forwarding classes to default fabric fc-sets if you want):

Table 85: Default Fabric Forwarding Class Sets

Fabric Forwarding Class Set Name	Characteristics
fabric_fcset_be	Transports best-effort unicast traffic across the fabric.

Copyright © 2018, Juniper Networks, Inc.

Table 85: Default Fabric Forwarding Class Sets (continued)

Fabric Forwarding Class Set Name	Characteristics
fabric_fcset_strict_high	Transports unicast traffic that has been configured with **strict-high** priority and in the **network-control** forwarding class across the fabric. NOTE: This fabric fc-set receives as much bandwidth across the fabric as it needs to service the traffic in the group up to the entire fabric interface bandwidth. For this reason, exercise caution when mapping traffic to this fabric fc-set to avoid starving other traffic.
fabric_fcset_noloss1	Transports unicast traffic in the default **fcoe** forwarding class across the fabric.
fabric_fcset_noloss2	Transports unicast traffic in the default **no-loss** forwarding class across the fabric.
fabric_fcset_multicast1	Transports multidestination traffic in the **mcast** forwarding class across the fabric. This fabric fc-set is valid only for multidestination forwarding classes.

The remaining four unicast fabric fc-sets (**fabric_fcset_noloss3**, **fabric_fcset_noloss4**, **fabric_fcset_noloss5**, and **fabric_fcset_noloss6**) can carry lossless traffic and are available for mapping or remapping forwarding classes on the Interconnect device. The remaining three mutidestination fabric fc-sets (**fabric_fcset_multicast2**, **fabric_fcset_multicast3**, and **fabric_fcset_multicast4**) are available for remapping multidestination forwarding classes.

The total of six lossless and four multidestination fabric fc-sets enable you to separate traffic from Node devices into up to ten classes on the Interconnect device, not including the best-effort and strict high-priority fabric fc-sets. Because each fabric fc-set uses a different output queue on egress interfaces, the flows (forwarding classes) mapped to each fabric fc-set do not share fate with flows in other fabric fc-sets on ingress interfaces.

The total number of unique flows on a QFabric system is vastly greater than the number of fabric fc-sets, so fabric fc-sets still aggregate flows—each fabric fc-set will carry a group of flows that require similar CoS treatment. However, the fabric fc-sets enable you to spread the flows across multiple output queues, and thus mitigate the effects of fate sharing.

NOTE: **The forwarding class flows within a fabric fc-set share fate on ingress interfaces because they use the same output queue. However, the ability to separate flows into different classes that use different output queues enables you to control how much traffic is mapped to a given output queue, and in that way to mitigate the possibility of fate sharing.**

For more information about fabric fc-sets, see "Understanding CoS Fabric Forwarding Class Sets" on page 330.

Scheduling Bandwidth for Fabric Forwarding-Class Sets (Interconnect Device)

The five default fabric fc-sets (**fabric_fcset_be**, **fabric_fcset_strict_high**, **fabric_fcset_noloss1**, **fabric_fcset_noloss2**, and **fabric_fcset_multicast1**, see "Mapping Forwarding Classes to Fabric Forwarding Class Sets (Interconnect Device)" on page 358) receive scheduling resources on Interconnect device output queues by default. If you are using only default fabric fc-sets, then you can use the default scheduling. However, you can change scheduling parameters, such as the amount of bandwidth allocated to a default fabric fc-set, if you want to adjust the default scheduling.

If you configure a new forwarding class on a Node device, you must map the new forwarding class to a fabric fc-set so that the traffic classified into the forwarding class receives queue bandwidth resources. If you map a new forwarding class to one of the default fabric fc-sets on the Interconnect device, then the default bandwidth scheduled for that fabric fc-set is shared among the forwarding classes assigned to the fabric fc-set by default, and also with the new forwarding class.

If you map a new forwarding class to one of the non-default fabric fc-sets, you must schedule queue bandwidth resources for that fabric fc-set, or else the traffic mapped to the fabric fc-set receives only a small amount of bandwidth.

NOTE: You apply queue (forwarding class) scheduling to interfaces. The Interconnect device interfaces consist of the ingress and egress 40-Gbps (*fte*) interfaces that connect to QFabric system Node devices, and internal Clos fabric (*bfte*) interfaces. You need to apply the appropriate scheduler to each fte interface in the traffic path. All traffic traverses the internal Clos fabric interfaces, so you also need to apply the appropriate scheduler to the Clos fabric bfte interfaces. (You configure one scheduler that applies to all of the internal Clos fabric interfaces. It is not possible or desirable to attach a scheduler to a particular internal Clos fabric interface.)

Because one scheduler applies to all of the Clos fabric interfaces, you either use the default scheduler on all Clos interfaces, or you use your custom configured scheduler on all Clos interfaces.

For conceptual information about configuring CoS scheduling on an Interconnect device and across the entire QFabric system, see "Understanding CoS Scheduling Across the QFabric System" on page 276. For information about default CoS scheduling on the Interconnect device, see "Understanding Default CoS Scheduling on QFabric System Interconnect Devices (Junos OS Release 13.1 and Later Releases)" on page 265. For an example of how to configure scheduling on an Interconnect device and across the entire QFabric system, see "Example: Configuring CoS Scheduling Across the QFabric System" on page 297.

Multidestination Traffic (FCoE Initialization Protocol Traffic)

Multidestination (multicast, broadcast, and destination lookup fail) traffic that is not switched locally on a QFabric system Node device is switched across the Interconnect device. On the Node device, by default, multidestination traffic uses the **mcast** forwarding

 Copyright © 2018, Juniper Networks, Inc.

class. On the Interconnect device, by default the multidestination traffic from the Node devices uses the **fabric_fcset_multicast1** fabric fc-set. The output queue for the **fabric_fcset_multicast1** fabric fc-set receives up to 20 percent of the available egress port bandwidth.

FCoE devices on the Ethernet network use FCoE Initialization Protocol (FIP) to establish a virtual point-to-point link with the FCF. The FCF sends periodic multicast discovery advertisements (MDAs) to advertise its presence on the network to ENodes. When an ENode comes online, it sends a multicast discovery solicitation (MDS) advertisement to search the network for FCFs.

The FIP MDA and MDS advertisements use the default multicast queue on the Interconnect device. If the amount of multidestination traffic that crosses the Interconnect device causes congestion on the multidestination queue, that congestion can impact FIP discovery advertisement traffic. (Fate sharing can occur because the FIP advertisements share the same fabric fc-set, and therefore the same output queue, as the rest of the multidestination traffic on the Interconnect device. Multidestination traffic that uses the same ingress interface at any point on the Interconnect device can experience fate sharing if the output queue becomes congested.)

NOTE: **If the amount of multidestination traffic on the Interconnect device is not enough to cause congestion, you do not have to remap multicast FIP traffic into a separate forwarding class to avoid fate sharing.**

NOTE: **Although multicast FIP traffic uses the mcast queue and the fabric_fcset_multicast1 fabric fc-set by default, unicast FCoE and FIP traffic uses the fcoe forwarding class and the fabric_fcset_noloss1 fabric fc-set by default.**

If the amount of multidestination traffic that traverses the Interconnect device can cause congestion, then you can remap the FIP multicast traffic into a new forwarding class on the Node device and a new fabric fc-set on the Interconnect device to mitigate fate sharing. The process is similar to mitigating fate sharing on unicast traffic, but there are a few differences:

1. Configure a new multidestination forwarding class for the FIP multicast traffic on the Node device. (By default, multicast FIP traffic is classified into the default **mcast** forwarding class.)
2. Configure queue and priority group scheduling (hierarchical scheduling) for the new multidestination forwarding class.
3. Configure a firewall filter to remap the FIP multicast traffic into the new forwarding class. To match FIP multicast traffic, specify two match conditions: the ALL-FCF-MAC address (01:10:18:01:00:02) as the source or destination MAC address (depending on the direction of flow), and the FIP EtherType (0x8014).
4. Bind the firewall filter to the appropriate VLAN.

5. Map the new multidestination forwarding class that you created on the Node device to an unused multicast fabric fc-set on the Interconnect device.
6. Configure scheduling for the multicast fabric fc-set on the Interconnect device.

NOTE: **When configuring firewall filter match conditions, you cannot match on multicast addresses based on prefix. You must use a specific multicast address as the source or destination address.**

Best Practices

The previous sections include some best practices for mitigating fate sharing. This section aggregates those best practices, along with a few other tips.

- VLANs on page 362
- Source/Destination MAC Address for FCoE Traffic on page 362
- Firewall Filter Term Sequence on page 362

VLANs

Place traffic of one type in one VLAN (use separate VLANs for each different type of traffic). We recommend that you do not mix different types of traffic in the same VLAN. The QFabric system requires that a VLAN that carries FCoE traffic must carry only FCoE traffic. However, it is a good practice to do the same thing with other types of traffic. For example, if your network carries both iSCSI and NAS traffic, we recommend that you dedicate one VLAN to iSCSI traffic, and one VLAN to NAS traffic (and so on). You can configure separate firewall filters to mitigate fate sharing for each type of traffic.

Source/Destination MAC Address for FCoE Traffic

For FCoE traffic, we recommend that you use the FCF MAC address (instead of the ENode MAC address) as the source or destination address when you configure a firewall filter, because an ENode might be able to reach more than one FCF. Using the FCF MAC is the most specific way to identify the correct path for the traffic.

Firewall Filter Term Sequence

In most cases, the sequence of terms in a fate sharing firewall filter does not matter (with the exception of the final **accept** term), so in most cases, it does not matter if a **from-fabric** term is placed before a **to-fabric** term in the firewall filter.

However, we recommend that if you use the **except** option with **to-fabric** (**to-fabric except**), you should place the **to-fabric except** term before the **from-fabric** in the firewall filter.

In general, we recommend that in a filter, you configure the **to-fabric** terms first, then configure the **from-fabric** terms, and end the filter with an **accept** term (unless you want to drop traffic that does not match the filter).

Copyright © 2018, Juniper Networks, Inc.

Limitations and Notes on Behavior

There are a number of limitations and behaviors that you should understand about how to mitigate fate sharing across an Interconnect device. Some of those limitations and behaviors have been discussed in the previous sections, and are repeated here for your convenience.

- Limitations on page 363
- Notes on Behavior on page 364

Limitations

- You can configure firewall filters for fate sharing mitigation only in the **firewall family ethernet-switching** hierarchy. You cannot configure firewall filters to mitigate fate sharing in the **inet** (IPv4) or **inet6** (IPv6) firewall family hierarchies.
- Interconnect device fabric fc-sets are not user-configurable (you cannot rename them or configure new fabric fc-sets). You can map the default forwarding classes and the forwarding classes that you define on Node devices to fabric fc-sets to control the traffic that is mapped to each fabric-fcset.
- The possibility of fate sharing cannot be avoided on Node device ingress interfaces. If two servers access a Node device on the same ingress interface, and both servers send traffic flows that are classified into the same forwarding class (for example, if both flows are FCoE traffic and are classified into the *fcoe* forwarding class), then even if the flows are in different VLANs, congestion on one flow affects the other flow. The congested flow affects the uncongested flow because both flows share the same forwarding class (and therefore the same output queue and IEEE 802.1p code point), and priority-based flow control (PFC) is applied to the ingress interface, not to the VLAN. So when PFC pauses the congested flow on the ingress interface, the uncongested flow that uses the same code point is also paused.
- The Interconnect device supports a maximum of six lossless unicast flow groups (six lossless unicast fabric fc-sets). In practice, a QFabric system has many more that six flows, so you cannot map each individual flow to a dedicated fabric fc-set. However, you can group flows into six separate sets by mapping groups of flows to different fabric fc-sets. Each fabric fc-set uses a different output queue, so the flows in one fabric fc-set do not share fate with the flows in the other fabric fc-sets when the flows traverse the same ingress interface. The ability to separate flows into six different fabric fc-sets spreads the flows among six different output queues, thus mitigating fate sharing.
- The Interconnect device supports a maximum of four multidestination flow groups (four multicast fabric fc-sets).
- The flows (forwarding classes) within a fabric fc-set share fate when they use the same ingress interface because they use the same output queue. (However, the ability to separate flows into different classes that use different output queues enables you to control how much traffic is mapped to a given output queue, and to mitigate the possibility of fate sharing.)

- Do not apply firewall filters that remap forwarding classes while traffic that the filters affect is flowing!

  For forwarding class remapping to work properly, traffic must be mapped from its original forwarding class to a new forwarding class before it enters the Interconnect device, and then mapped back to the original forwarding class after it exits the Interconnect. If traffic is not mapped back into its original forwarding class after crossing the Interconnect device, traffic is classified into the wrong forwarding class and is not delivered as expected. Because of this, the QFabric system must program the filters on the ingress Node device and the egress Node device when affected traffic is not flowing.

  If traffic is flowing when you apply the filters to a VLAN, and the ingress Node device filter is programmed before the egress Node device filter is programmed, traffic is not remapped back into its original forwarding class until the egress Node device filter is applied. For this reason, apply filters only when affected traffic is not flowing through the QFabric system.

- If an ENode (FCoE device on the Ethernet network) is directly connected to a QFabric system Node device, and that Node device is directly connected to the FCoE-FC gateway by a LAG interface, then using firewall filters to mitigate fate sharing by remapping forwarding classes is not supported, so that traffic is not remapped.

  On Node devices that have directly connected ENodes and that also connect directly to an FCoE-FC gateway using a LAG interface, configure the Node device interfaces in a different VLAN than the interfaces on which you want to mitigate fate sharing. In this scenario, interfaces on the Node device should not be in the same VLAN as interfaces on which you want to apply firewall filters to mitigate fate sharing.

  If the interface between the Node device and the FCoE-FC gateway is not a LAG interface, then forwarding class remapping works when ENodes are directly connected to the Node device. The fate sharing mitigation feature does not work only when ENodes are directly connected to the Node device *and* the connection between the Node device and the FCoE-FC gateway is a LAG interface.

- When configuring firewall filter match conditions, you cannot match on multicast addresses based on prefix. You must use a specific multicast address as the source or destination address.

Notes on Behavior

- You bind (apply) firewall filters for mitigating fate sharing to ingress VLANs only, not to ports. The filter affects all matched traffic on all Node device ingress interfaces that are members of the VLAN. So if ports on multiple Node devices are members of the VLAN, then the firewall filter remaps traffic on the VLAN member ports of all of those Node devices. If you want to remap traffic on only one Node device, then the VLAN member interfaces should all be on that Node device, and not on other Node devices.

- Although firewall filters mitigate fate sharing on the Interconnect device, they do not mitigate fate sharing on a Node device. This is because PFC is applied to specified queues on a port, not to a VLAN. (Recall that forwarding classes are mapped to queues, so all traffic in the same forwarding class uses the same queue, regardless of VLAN membership.)

 Copyright © 2018, Juniper Networks, Inc.

An example scenario is two VLANs that contain FCoE traffic that is classified into the **fcoe** forwarding class and use an ingress interface on the same Node device. The **fcoe** forwarding class is classified to IEEE 802.1p code point 011 (priority 3) to identify the FCoE traffic on both VLANs (because all of the FCoE traffic requires the same CoS treatment and all of the traffic is destined for the same SAN), and so both VLANs use the same output queue.

If FCoE traffic in one of the VLANs experiences congestion, PFC is enabled on the flow, and the flow is paused until the congestion clears. Because the FCoE traffic in the other VLAN uses the same output queue (forwarding class), when the congested FCoE flow is paused on the ingress interface, all FCoE traffic that uses that ingress interface is also paused. In this way, the congested FCoE flow affects the uncongested FCoE flow, and the two flows share the same fate.

So if two servers on the same Node device ingress port send traffic that belongs to the same forwarding class (in this example, **fcoe**), they can experience fate sharing on the Node device.

- When you configure a firewall filter, by default, the last term in the filter is a discard action. (This s standard default behavior and is not unique to fate sharing mitigation filters.) To avoid dropping traffic that does not match the filter conditions for forwarding class remapping, add a final term with **accept** as the action. This is especially important when you are not remapping all of the traffic in a VLAN.
- If you remap FCoE flows based on EtherType, include separate filter terms to match both the FCoE EtherType (0x8906) and the FIP EtherType (0x8914).
- You must configure filter terms that remap the forwarding classes in both directions of flow. You need to configure terms for **to-fabric** and **from-fabric** for the flow from the originating device to the target, and also for the return flow from the target to the originating device. For example, for an FCoE flow, you configure a **to-fabric** and a **from-fabric** term for the traffic flowing from the ENode to the FC SAN, and a **to-fabric** and a **from-fabric** term for traffic flowing from the FC SAN to the ENode.

Related Documentation

- *Overview of Firewall Filters*
- *Firewall Filter Match Conditions and Actions*
- *Configuring Firewall Filters*
- Understanding CoS Fabric Forwarding Class Sets on page 330
- Understanding CoS Scheduling Across the QFabric System on page 276
- Understanding Default CoS Scheduling on QFabric System Interconnect Devices (Junos OS Release 13.1 and Later Releases) on page 265
- Example: Configuring CoS Scheduling Across the QFabric System on page 297
- Understanding CoS Output Queue Schedulers on page 159
- Understanding CoS Hierarchical Port Scheduling (ETS) on page 192
- Understanding CoS Forwarding Classes on page 104
- Defining CoS Forwarding Classes on page 111

- Configuring Fate Sharing Mitigation Across the Interconnect Device by Remapping Traffic Flows (Forwarding Classes) on page 366

Configuring Fate Sharing Mitigation Across the Interconnect Device by Remapping Traffic Flows (Forwarding Classes)

On a QFabric system, traffic flows that belong to the same forwarding class are mapped to the same output queue and share the output queue resources. If congestion occurs on one of these flows, the congestion can affect the uncongested flows in the forwarding class when the flows use the same ingress interface.

For example, if a congested flow is paused to prevent packet loss, uncongested flows that use the same ingress interface are also paused because they share the same forwarding class and output queue. When a congested flow affects an uncongested flow, the flows share the same fate—this is known as fate sharing.

Fate sharing happens because pausing traffic is based on forwarding class. When a flow experiences congestion, the output queue sends a pause message to the input queue on which the flow arrived. On that input queue, the pause message affects all traffic in the forwarding class that is mapped to the congested output queue. So all traffic in that forwarding class is paused on the input queue, not just the flow that is experiencing the congestion. This is how uncongested flows can share fate with a congested flow.

Traffic from many QFabric system Node devices crosses the Interconnect device, so flows within a given forwarding class are aggregated on the Interconnect device. The aggregated flows use the same output queue on the Interconnect device and are subject to fate sharing if the flows also use the same ingress interface.

In addition to the external physical interfaces that connect the Interconnect device to Node devices, the Interconnect device has internal Clos interfaces. The Interconnect device automatically selects the best path through its internal Clos interfaces. Path selection through the internal Clos interfaces is not configurable, so you cannot control the traffic that enters any particular ingress Clos interface, and so fate sharing can occur on the Interconnect device. (On Node devices, you control the traffic connected to an ingress interface, but on the Interconnect device, you cannot control which flows use a particular internal ingress Clos interface.)

However, you can use firewall filters to separate the traffic assigned to one forwarding class and split it into different forwarding classes for the journey across the Interconnect device. Remapping the flows into different forwarding classes means the flows use different output queues on the Interconnect device. If the flows use the same ingress interface on the Interconnect device, they do not experience fate sharing because only the flows mapped to the congested queue are paused, while the flows remapped to other forwarding classes are not paused.

This topic shows you how to configure firewall filters to remap traffic across the Interconnect device and mitigate fate sharing.

To change the forwarding class (and therefore the output queue) that traffic uses on the Interconnect device, you need to map traffic into a new forwarding class before it

 Copyright © 2018, Juniper Networks, Inc.

enters the Interconnect device, then map the traffic back into the original forwarding class after it exits the Interconnect device. Traffic needs to be mapped back into its original forwarding class before it leaves the QFabric system because the original forwarding class contains similar traffic, and is configured to support the CoS that the traffic type requires and the destination device expects. For example, FCoE traffic destined for different targets in the same Fibre Channel storage area network must be in the same forwarding class (and therefore have the same IEEE 802.1p priority), or the traffic is not handled properly.

The firewall filter has to remap traffic in both directions of flow. For example, if a flow transports traffic between a server and a target device, remapping needs to occur when traffic flows from the server to the target device, and also when traffic flows from the target device to the server. Firewall filter terms contain match conditions (**from** statement) to identify traffic, and actions (**then** statement) to tell the system what to do with the identified traffic.

You configure a firewall filter for fate sharing mitigation in the **firewall family ethernet-switching** hierarchy. You cannot configure firewall filters to mitigate fate sharing in the **inet** (IPv4) or **inet6** (IPv6) firewall family hierarchies.

To mitigate fate sharing across the Interconnect device, you need to configure a firewall filter that:

1. Identifies and remaps traffic flowing from a source to a destination before it enters the Interconnect device. (This separates flows for crossing the Interconnect device.)
2. Identifies and remaps traffic flowing from a source to a destination after it exits the Interconnect device. (This brings flows back into their original forwarding class before traffic is forwarded toward its destination.)

   Steps 1 and 2 combine to remap flows across the Interconnect device as traffic travels from a source to a destination.
3. Identifies and remaps traffic flowing back from a destination to a source before it enters the Interconnect device. (This separates flows for crossing the Interconnect device in the other direction.)
4. Identifies and remaps traffic flowing back from a destination to a source after it exits the Interconnect device. (This brings flows back into their original forwarding class in the other direction.)

   Steps 3 and 4 combine to remap flows across the Interconnect device on the return path, as traffic flows from the destination device back to the original source device.
5. Accept other traffic. Because firewall filters have an implicit default *discard* terminating action, include a final *accept* term so that traffic that does not match the filter is not dropped (unless you want to drop traffic that does not match the filter).

You can use the following match conditions in the filter term **from** statement to identify (select) traffic that you want to remap as it crosses the Interconnect device:

- Client-side MAC address (for example, an FCF MAC address for FCoE traffic) (**destination-mac-address** ***mac-address***) or (**source-mac-address** ***mac-address***)
- Server-side MAC address (for example, an ENode MAC address for FCoE traffic) (**destination-mac-address** ***mac-address***) or (**source-mac-address** ***mac-address***)
- EtherType (**ether-type** ***value***)

  NOTE: If you remap an FCoE flow using EtherType as a match condition, you need to include two terms in the filter in each direction of flow to identify the traffic, one term to identify FCoE traffic (EtherType 0x8906), and one term to identify FIP traffic (EtherType 0x8914).

- VLAN (**vlan (*vlan-name* | *vlan-id*)**)
- .1q user priority (**dot1q-user-priority** ***value***)

Match conditions enable you to identify traffic in VLANs that carry a mix of traffic types—for example, you can identify a flow within a VLAN based on EtherType or .1q value. For more information about match conditions, see *Firewall Filter Match Conditions and Actions*.

BEST PRACTICE: For FCoE traffic, we recommend that you use the FCF MAC address (instead of the ENode MAC address) as the source or destination address when you configure a firewall filter, because an ENode might be able to reach more than one FCF. Using the FCF MAC is the most specific way to identify the correct path for the traffic.

NOTE: You cannot match on multicast addresses based on prefix. You must use a specific multicast address as the source or destination address.

In the same filter term **from** statement, you specify a match condition to determine whether you are identifying traffic that is flowing from a Node device into the Interconnect device, or traffic that is flowing from the Interconnect device to a Node device:

- **to-fabric <except>**—This condition matches traffic that flows from a Node device to an Interconnect device (traffic that is exiting a Node device and entering the Interconnect device). Traffic that matches the **to-fabric** condition is remapped before it exits the ingress Node device and enters the Interconnect device.

  The **except** option remaps forwarding classes for traffic that is locally switched. For example, if a target device is directly connected to a Node device, the traffic destined for the directly connected target is remapped to the new forwarding class. When you specify the **except** option, traffic that is remotely switched is *not* remapped to a new forwarding class before it crosses the Interconnect device.

Copyright © 2018, Juniper Networks, Inc.

- **from-fabric**—This condition matches traffic that flows from the Interconnect device to a Node device (traffic that is exiting the Interconnect device and entering the egress Node device). Traffic that matches the **from-fabric** condition is mapped back to its original forwarding class after it exits the Interconnect device, when it enters the egress Node device.

BEST PRACTICE: In a firewall filter configuration, if you use a **to-fabric except** match condition, place it before the **from-fabric** term in the sequence of terms in the filter.

In general, we recommend that in a filter, you configure the **to-fabric** terms first, then configure the **from-fabric** terms.

After you configure match conditions in a filter term, you configure an action to take on the identified (matched) traffic in the same term. Because the goal is to remap traffic in one forwarding class into a different forwarding class, the action is usually to place the matched traffic into a forwarding class.

Use the following actions (**then** statement) to control into which forwarding class the matched traffic is remapped in a given term:

- **forwarding-class** ***forwarding-class-name***—Specify a default or a user-defined forwarding class into which matching traffic is mapped.
- **loss-priority** ***level***—If you specify a forwarding class for matching traffic, you must also specify the packet loss priority (PLP) level for the forwarding class. The PLP level can be **low**, **medium-high**, or **high**.
- **count** ***counter-name***—Optionally, you can configure an action to count the number of packets affected by each term.

NOTE: You can use the match conditions to identify a traffic flow, and then count the packets without remapping the forwarding class. To do that, in the **then** statement, do not include the forwarding class and loss priority, include only the **count** action.

After you configure a firewall filter that remaps traffic across the Interconnect device in both directions of flow, you bind (apply) the filter to an ingress (input) VLAN. The filter only affects traffic in that VLAN.

The following procedure shows how to configure a firewall filter that mitigates fate sharing on the Interconnect device using the CLI. Steps 1-4 configure forwarding class remapping for traffic leaving an ingress Node device and entering the Interconnect device (**to-fabric**), in both directions of flow. Steps 5-8 configure forwarding class remapping for traffic leaving the Interconnect device and entering the egress Node device (**from-fabric**), in both directions of flow.

1. Name the firewall filter and the first term of the filter, and then define match conditions for traffic flowing from the ingress Node device to the Interconnect device in the server-to-target direction (this filter term identifies the traffic to map into a different forwarding class):

   ```
   [edit firewall family ethernet-switching]
   user@switch# set filter filter-name term term-name from flow-match-conditions
   user@switch# set filter filter-name term term-name to-fabric
   ```

   The *flow-match-conditions* specify the traffic that you want to remap to a different forwarding class on the ingress Node device for transport across the Interconnect device. The **to-fabric** condition matches only traffic that is going from the ingress Node device to the Interconnect device.

2. In the same firewall filter and term, configure the action to take on traffic on the ingress Node device that matches the conditions in the server-to-target direction (the action is to map the traffic into a different forwarding class on the ingress Node device, before the traffic enters the Interconnect device):

   ```
   [edit firewall family ethernet-switching]
   user@switch# set filter filter-name term term-name then forwarding-class
   new-forwarding-class-name loss-priority priority-value
   user@switch# set filter filter-name term term-name then counter counter-name
   ```

   The *new-forwarding-class-name* specifies the forwarding class that the matching traffic is mapped to for transport across the Interconnect device. The packet counter action is optional, but is included here and in later steps because many administrators like to have this type of information available to analyze traffic patterns.

3. In the same firewall filter, configure a second term to define match conditions for traffic flowing from the ingress Node device to the Interconnect device in the target-to-server direction (this filter term identifies the traffic to map into a different forwarding class):

   ```
   [edit firewall family ethernet-switching]
   user@switch# set filter filter-name term term-name from flow-match-conditions
   user@switch# set filter filter-name term term-name to-fabric
   ```

   The *flow-match-conditions* specify the traffic that you want to remap to a different forwarding class on the ingress Node device for transport across the Interconnect device. The **to-fabric** condition matches only traffic that is going from the ingress Node device to the Interconnect device.

 Copyright © 2018, Juniper Networks, Inc.

4. In the second term in the same firewall filter, configure the action to take on traffic on the ingress Node device that matches the conditions in the target-to-server direction (the action is to map the traffic into a different forwarding class on the ingress Node device, before the traffic enters the Interconnect device):

   ```
   [edit firewall family ethernet-switching]
   user@switch# set filter filter-name term term-name then forwarding-class
   new-forwarding-class-name loss-priority priority-value
   user@switch# set filter filter-name term term-name then counter counter-name
   ```

   The first four steps of this process configure match conditions to identify Interconnect device ingress traffic in both directions of flow, and the forwarding class remapping action to take on the matched traffic. The next four steps map the traffic back into its original forwarding class after the traffic exits the Interconnect device, in both directions of flow.

5. In the same firewall filter, configure a third term to define match conditions for traffic flowing from the Interconnect device to the egress Node device in the server-to-target direction (this term identifies traffic to map back into the original forwarding class after it crosses the Interconnect device):

   ```
   [edit firewall family ethernet-switching]
   user@switch# set filter filter-name term term-name from flow-match-conditions
   user@switch# set filter filter-name term term-name from-fabric
   ```

   The *flow-match-conditions* specify the traffic that you want to map back into the original forwarding class on the egress Node device, after the traffic crosses the Interconnect device. The **from-fabric** condition matches only traffic that is coming from the Interconnect device into the egress Node device.

6. In the third term in the same firewall filter, configure the action to take on traffic when it enters the egress Node device from the Interconnect device in the server-to-target direction (the action is to map the traffic back into its original forwarding class on the egress Node device, after the traffic crosses the Interconnect device):

   ```
   [edit firewall family ethernet-switching]
   user@switch# set filter filter-name term term-name then forwarding-class
   original-forwarding-class-name loss-priority priority-value
   user@switch# set filter filter-name term term-name then counter counter-name
   ```

   The *original-forwarding-class-name* specifies the original forwarding class name (the forwarding class the traffic was first classified into when it entered the QFabric system). Traffic that matches the conditions in Step 5 is mapped back into its original forwarding class when it enters the egress Node device, after the traffic crosses the Interconnect device.

7. In the same firewall filter, configure a fourth term to define match conditions for traffic flowing from the Interconnect device to the egress Node device in the target-to-server direction (this term identifies traffic to map back into the original forwarding class after it crosses the Interconnect device):

```
[edit firewall family ethernet-switching]
user@switch# set filter filter-name term term-name from flow-match-conditions
user@switch# set filter filter-name term term-name from-fabric
```

8. In the fourth term in the same firewall filter, configure the action to take on traffic when it enters the egress Node device from the Interconnect device in the target-to-server direction (the action is to map the traffic back into its original forwarding class on the egress Node device, after the traffic crosses the Interconnect device):

```
[edit firewall family ethernet-switching]
user@switch# set filter filter-name term term-name then forwarding-class
original-forwarding-class-name loss-priority priority-value
user@switch# set filter filter-name term term-name then counter counter-name
```

   The first eight steps remap traffic in both directions of flow on the Interconnect device, and ensure that the traffic is mapped to its original forwarding class on the Node devices and as the traffic exits the QFabric system.

9. In the same firewall filter, add a final fifth term to define the default handling (action) of traffic that does not match the filter conditions. Firewall filters have an implicit default discard action, but in most cases, the intention is not to drop traffic is that is not remapped to a different forwarding class, so the action should be to accept the rest of the traffic:

```
[edit firewall family ethernet-switching]
user@switch# set filter filter-name term term-name then accept
```

   If you wish, you can also configure a final counter in this term to count the total number of packets affected by the filter.

NOTE: If you configure a new forwarding class for the remapped traffic on a Node device, you must also configure scheduling for the new forwarding class on the Node device. On the Interconnect device, you must map the forwarding class to a fabric forwarding class set (fabric fc-set; see "Understanding CoS Fabric Forwarding Class Sets" on page 330 for more information), and if the fabric fc-set is not one of the default fabric fc-sets, you must configure scheduling for the fabric fc-set (see "Example: Configuring CoS Scheduling Across the QFabric System" on page 297 for more information).

Related Documentation

- *Configuring Firewall Filters*
- *Firewall Filter Match Conditions and Actions*
- Example: Configuring CoS Scheduling Across the QFabric System on page 297
- Understanding How to Mitigate Fate Sharing on a QFabric System Interconnect Device by Remapping Traffic Flows (Forwarding Classes) on page 343

Copyright © 2018, Juniper Networks, Inc.

PART 4

Configuring Data Center Bridging (ETS, PFC, DCBX) and Flow Control

- Using Data Center Bridging and Flow Control on page 375

Copyright © 2018, Juniper Networks, Inc.

CHAPTER 7

Using Data Center Bridging and Flow Control

- Understanding DCB Features and Requirements on page 376
- Understanding CoS Hierarchical Port Scheduling (ETS) on page 379
- Example: Configuring CoS Hierarchical Port Scheduling (ETS) on page 386
- Disabling the ETS Recommendation TLV on page 413
- Understanding CoS Flow Control (Ethernet PAUSE and PFC) on page 414
- Enabling and Disabling CoS Symmetric Ethernet PAUSE Flow Control on page 426
- Configuring CoS Asymmetric Ethernet PAUSE Flow Control on page 427
- Configuring CoS PFC (Congestion Notification Profiles) on page 429
- Example: Configuring CoS PFC for FCoE Traffic on page 432
- Troubleshooting Dropped FCoE Traffic on page 442
- Understanding CoS IEEE 802.1p Priorities for Lossless Traffic Flows on page 446
- Example: Configuring Lossless FCoE Traffic When the Converged Ethernet Network Does Not Use IEEE 802.1p Priority 3 for FCoE Traffic (FCoE Transit Switch) on page 465
- Example: Configuring Two or More Lossless FCoE Priorities on the Same FCoE Transit Switch Interface on page 474
- Example: Configuring Two or More Lossless FCoE IEEE 802.1p Priorities on Different FCoE Transit Switch Interfaces on page 484
- Example: Configuring Lossless IEEE 802.1p Priorities on Ethernet Interfaces for Multiple Applications (FCoE and iSCSI) on page 500
- Understanding CoS IEEE 802.1p Priority Remapping on an FCoE-FC Gateway on page 519
- Example: Configuring IEEE 802.1p Priority Remapping on an FCoE-FC Gateway on page 522
- Understanding DCBX on page 533
- Configuring the DCBX Mode on page 542
- Configuring DCBX Autonegotiation on page 543
- Understanding DCBX Application Protocol TLV Exchange on page 546
- Defining an Application for DCBX Application Protocol TLV Exchange on page 550
- Configuring an Application Map for DCBX Application Protocol TLV Exchange on page 551

Copyright © 2018, Juniper Networks, Inc.

- Applying an Application Map to an Interface for DCBX Application Protocol TLV Exchange on page 552
- Example: Configuring DCBX Application Protocol TLV Exchange on page 553

Understanding DCB Features and Requirements

Data center bridging (DCB) is a set of enhancements to the IEEE 802.1 bridge specifications. DCB modifies and extends Ethernet behavior to support I/O convergence in the data center. I/O convergence includes but is not limited to the transport of Ethernet LAN traffic and Fibre Channel (FC) storage area network (SAN) traffic on the same physical Ethernet network infrastructure.

Video: What is Data Center Bridging?

A converged architecture saves cost by reducing the number of networks and switches required to support both types of traffic, reducing the number of interfaces required, reducing cable complexity, and reducing administration activities.

The Juniper Networks QFX Series and EX4600 switches support the DCB features required to transport converged Ethernet and FC traffic while providing the class-of-service (CoS) and other characteristics FC requires for transmitting storage traffic. To accommodate FC traffic, DCB specifications provide:

- A flow control mechanism called priority-based flow control (PFC, described in IEEE 802.1Qbb) to help provide lossless transport.
- A discovery and exchange protocol for conveying configuration and capabilities among neighbors to ensure consistent configuration across the network, called Data Center Bridging Capability Exchange protocol (DCBX), which is an extension of Link Layer Data Protocol (LLDP, described in IEEE 802.1AB).
- A bandwidth management mechanism called enhanced transmission selection (ETS, described in IEEE 802.1Qaz).
- A congestion management mechanism called quantized congestion notification (QCN, described in IEEE 802.1Qau).

The switch supports the PFC, DCBX, and ETS standards but does not support QCN. The switch also provides the high-bandwidth interfaces (10-Gbps minimum) required to support DCB and converged traffic.

This topic describes the DCB standards and requirements the switch supports:

- Lossless Transport on page 377
- ETS on page 378
- DCBX on page 378

 Copyright © 2018, Juniper Networks, Inc.

Lossless Transport

FC traffic requires lossless transport (defined as no frames dropped because of congestion). Standard Ethernet does not support lossless transport, but the DCB extensions to Ethernet along with proper buffer management enable an Ethernet network to provide the level of class of service (CoS) necessary to transport FC frames encapsulated in Ethernet over an Ethernet network.

This section describes these factors in creating lossless transport over Ethernet:

- PFC on page 377
- Buffer Management on page 377
- Physical Interfaces on page 377

PFC

PFC is a link-level flow control mechanism similar to Ethernet PAUSE (described in IEEE 802.3x). Ethernet PAUSE stops all traffic on a link for a period of time. PFC enables you to divide traffic on a link into eight priorities and stop the traffic of a selected priority without stopping the traffic assigned to other priorities on the link.

Pausing the traffic of a selected priority enables you to provide lossless transport for traffic assigned that priority and at the same time use standard lossy Ethernet transport for the rest of the link traffic.

Buffer Management

Buffer management is critical to the proper functioning of PFC, because if buffers are allowed to overflow, frames are dropped and transport is not lossless.

For each lossless flow priority, the switch requires sufficient buffer space to:

- Store frames sent during the time it takes to send the PFC pause frame across the cable between devices.
- Store the frames that are already on the wire when the sender receives the PFC pause frame.

The propagation delay due to cable length and speed, as well as processing speed, determines the amount of buffer space needed to prevent frame loss due to congestion.

The switch automatically sets the threshold for sending PFC pause frames to accommodate delay from cables as long as 150 meters (492 feet) and to accommodate large frames that might be on the wire when the switch sends the pause frame. This ensures that the switch sends pause frames early enough to allow the sender to stop transmitting before the receive buffers on the switch overflow.

Physical Interfaces

QFX Series switches support 10-Gbps or faster, full-duplex interfaces. The switch enables DCB capability only on 10-Gbps or faster Ethernet interfaces.

Copyright © 2018, Juniper Networks, Inc.

ETS

PFC divides traffic into up to eight separate streams (priorities, configured on the switch as forwarding classes) on a physical link. ETS enables you to manage the link bandwidth by:

- Grouping the priorities into priority groups (configured on the switch as forwarding class sets).
- Specifying the bandwidth available to each of the priority groups as a percentage of the total available link bandwidth.
- Allocating the bandwidth to the individual priorities in the priority group.

The available link bandwidth is the bandwidth remaining after servicing strict-high priority queues. On QFX5200, QFX5100, EX4600, QFX3500, and QFX3600 switches, and on QFabric systems, we recommend that you always configure a shaping rate to limit the amount of bandwidth a strict-high priority queue can consume by including the shaping-rate statement in the **[edit class-of-service schedulers]** hierarchy on the strict-high priority scheduler. This prevents a strict-high priority queue from starving other queues on the port. (On QFX10000 switches, configure a transmit rate on strict-high priority queues to set a maximum amount of bandwidth for strict-high priority traffic.)

Managing link bandwidth with ETS provides several advantages:

- There is uniform management of all types of traffic on the link, both congestion-managed traffic and standard Ethernet traffic.
- When a priority group does not use all of its allocated bandwidth, other priority groups on the link can use that bandwidth as needed.

  When a priority in a priority group does not use all of its allocated bandwidth, other priorities in the group can use that bandwidth.

  The result is better bandwidth utilization, because priorities that consist of bursty traffic can share bandwidth during periods of low traffic transmission instead of consuming their entire bandwidth allocation when traffic loads are light.
- You can assign traffic types with different service needs to different priorities so that each traffic type receives appropriate treatment.
- Strict priority traffic retains its allocated bandwidth.

DCBX

DCB devices use DCBX to exchange configuration information with directly connected peers (switches and endpoints such as servers). DCBX is an extension of LLDP. If you disable LLDP on an interface, that interface cannot run DCBX. If you attempt to enable DCBX on an interface on which LLDP is disabled, the configuration commit fails.

DCBX can:

- Discover the DCB capabilities of peers.

 Copyright © 2018, Juniper Networks, Inc.

- Detect DCB feature misconfiguration or mismatches between peers.
- Configure DCB features on peers.

You can configure DCBX operation for PFC, ETS, and for Layer 2 and Layer 4 applications such as FCoE and iSCSI. DCBX is enabled or disabled on a per-interface basis.

Related Documentation

- *Understanding FCoE*
- Understanding CoS Hierarchical Port Scheduling (ETS) on page 192
- Understanding CoS Flow Control (Ethernet PAUSE and PFC) on page 414
- Understanding DCBX on page 533
- Example: Configuring CoS PFC for FCoE Traffic on page 432

Understanding CoS Hierarchical Port Scheduling (ETS)

Scheduling defines the class-of-service (CoS) properties of output queues. Output queues are mapped to forwarding classes. CoS scheduler properties include the amount of interface bandwidth assigned to the queue, the queue priority, and the drop profiles associated with the queue.

Hierarchical port scheduling is a two-tier process that provides better port bandwidth utilization and greater flexibility to allocate resources to queues (forwarding classes) and to groups of queues (forwarding class sets). Hierarchical scheduling includes the Junos OS implementation of enhanced transmission selection (ETS), as described in IEEE 802.1Qaz.

NOTE: All QFX Series devices use ETS scheduling, except for QFX5120, QFX5200, and QFX5210 switches.

Starting with Junos OS 17.3, QFX10000 devices support ETS scheduling.

EX4600 switches use ETS scheduling while EX4650 switches do not.

Video: What is Enhanced Transmission Selection?

This topic describes:

- Hierarchical Scheduling Tiers on page 380
- Hierarchical Scheduling and ETS on page 381
- ETS Advertisement in DCBX on page 382
- Hierarchical Scheduling Process on page 382
- Strict-High Priority Queues and Hierarchical Scheduling on page 384
- Default Hierarchical Scheduling on page 384

Hierarchical Scheduling Tiers

The two tiers used in hierarchical scheduling are priorities and priority groups, as shown in Table 63 on page 193.

Table 86: Hierarchical Scheduling Tiers

Junos OS Configuration Construct	Equivalent ETS Construct	Description
Forwarding class	Priority	Think about priorities (forwarding classes) as output queues. You map forwarding classes to queues, so each forwarding class represents an output queue. When you use a classifier to map a forwarding class to an IEEE 802.1p code point, the code point identifies that traffic's priority for priority-based flow control (PFC). Thus the forwarding class, the queue mapped to the forwarding class, and the priority (code point) mapped to the forwarding class all identify the same traffic. NOTE: OCX Series switches do not support lossless transport or PFC.
Forwarding class set	Priority group	Priority groups (forwarding class sets) are groups of priorities (forwarding classes). Forwarding class membership in a forwarding class set defines the priority group to which each priority belongs. You can configure up to three unicast priority groups and one multicast priority group.

You apply scheduling properties to each hierarchical scheduling tier as descried in the next section.

NOTE: If you explicitly configure one or more priority groups on an interface, any priority (forwarding class) that is not assigned to a priority group (forwarding class set) on that interface is assigned to an automatically generated default priority group and receives *no bandwidth*. This means that if you configure hierarchical scheduling on an interface, every forwarding class that you want to forward traffic on that interface must belong to a forwarding class set.

NOTE: On OCX Series switches, by default, classifiers use DSCP code points to map traffic to forwarding classes. However, hierarchical scheduling works in the same manner as when you use IEEE 802.1p code points to classify traffic. The OCX Series classifies traffic into forwarding classes based on DSCP code points, the forwarding classes are mapped to forwarding class sets, and you apply scheduling properties to each of the two tiers.

Copyright © 2018, Juniper Networks, Inc.

Hierarchical Scheduling and ETS

Two-tier hierarchical scheduling manages bandwidth efficiently by enabling you to define the CoS properties for each priority group and for each priority. The first tier of the hierarchical scheduler allocates port bandwidth to a priority group. The second tier of the hierarchical scheduler determines the portion of the priority group bandwidth that a priority (queue) can use.

The CoS properties of a priority group define the amount of port bandwidth resources available to the queues in that priority group. The CoS properties you configure for each queue specify the amount of the bandwidth available to the queue from the bandwidth allocated to the priority group. Figure 5 on page 194 shows the relationship of port resource allocation to priority groups, and priority group resource allocation to queues (priorities).

Figure 18: Hierarchical Scheduling Tiers

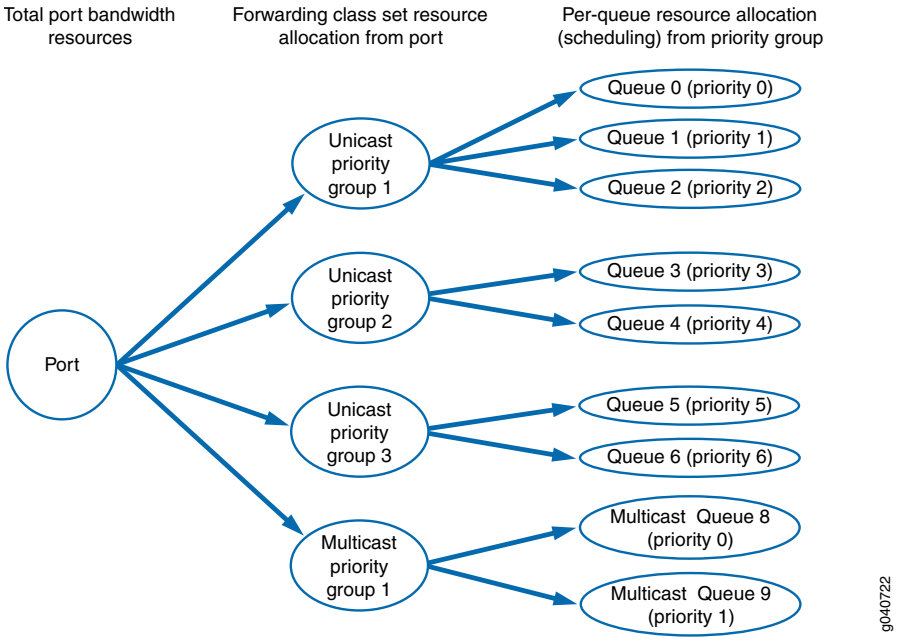

If a queue (priority) does not use its allocated bandwidth, ETS shares the unused bandwidth among the other queues in the priority group in proportion to the minimum guaranteed rate (transmit rate) scheduled for each queue. If a priority group does not use its allocated bandwidth, ETS shares the unused bandwidth among the priority groups on the port in proportion to the minimum guaranteed rate (guaranteed rate) scheduled for each priority group.

In this way, ETS improves link bandwidth utilization, and it provides each queue and each priority group with the maximum available bandwidth. For example, priorities that consist of bursty traffic can share bandwidth during periods of low traffic transmission, instead of reserving their entire bandwidth allocation when traffic loads are light.

Copyright © 2018, Juniper Networks, Inc.

NOTE: The available link bandwidth is the bandwidth remaining after servicing strict-high priority flows. Strict-high priority takes precedence over all other traffic. We recommend that you configure a shaping-rate (transmit-rate on QFX10000 switches) to limit the maximum amount of bandwidth that a strict-high priority forwarding class can use to prevent starving other queues.

ETS Advertisement in DCBX

When you configure hierarchical scheduling on a port, Data Center Bridging Capability Exchange protocol (DCBX) advertises:

- Each priority group
- The priorities in each priority group
- The bandwidth properties of each priority group and priority

When you configure hierarchical scheduling on a port, any priority that is not part of an explicitly configured priority group is assigned to the automatically generated default priority group and receives no bandwidth. The default priority group is transparent. It does not appear in the configuration.

NOTE: OCX Series switches do support DCBX, so hierarchical scheduling information is not exchanged with connected peers on OCX Series switches.

Hierarchical Scheduling Process

Hierarchical scheduling consists of multiple configuration steps that create the priorities and the priority groups, schedule their resources, and assign them to interfaces. The steps below correspond to the six blocks in the packet flow diagram shown in Figure 6 on page 196:

1. Packet classification:
   - Configure classification of incoming traffic into forwarding classes (priorities). This consists of either using the default classifiers or configuring classifiers to map code points and loss priorities to the forwarding classes.
   - Apply the classifiers to ingress interfaces or use the default classifiers. Applying a classifier to an interface groups incoming traffic on the interface into forwarding classes and loss priorities, by applying the classifier code point mapping to the incoming traffic.
2. Configure the output queues for the forwarding classes (priorities). This consists of either using the default forwarding classes and forwarding-class-to-queue mapping, or creating your own forwarding classes and mapping them to output queues.

Copyright © 2018, Juniper Networks, Inc.

3. Allocate resources to the forwarding classes:

   - Define resources for the priorities. This consists of configuring schedulers to set minimum guaranteed bandwidth, maximum bandwidth, drop profiles for Weighted Random Early Detection (WRED), and bandwidth priority to apply to a forwarding class. Extra bandwidth is shared among queues in proportion to the minimum guaranteed bandwidth (transmit rate) of each queue.
   - Map resources to priorities. This consists of mapping forwarding classes to schedulers, using a scheduler map.

4. Configure priority groups. This consists of mapping forwarding classes (priorities) to forwarding class sets (priority groups) to define the priorities that belong to each priority group.

5. Define resources for the priority groups. This consists of configuring traffic control profiles to set minimum guaranteed bandwidth (guaranteed-rate) and maximum bandwidth (shaping-rate on switches other than QFX10000 switches, transmit-rate on QFX10000 switches) for a priority group. Traffic control profiles also specify a scheduler map, which defines the resources (schedulers) mapped to the priorities in the priority group. Extra port bandwidth is shared among priority groups in proportion to the minimum guaranteed bandwidth of each priority group.

   The traffic control profile bandwidth settings determine the port resources available to the priority group. The schedulers specified in the scheduler map determine the amount of priority group resources that each priority receives.

   NOTE: QFX10000 switches do not support defining a shaping rate for priority groups. Instead, set the maximum bandwidth for a priority group by defining a transmit rate. See transmit-rate.

6. Apply hierarchical scheduling to a port. This consists of attaching one or more priority groups (forwarding class sets) to an interface. For each priority group, you also attach a traffic control profile, which contains the scheduling properties of the priority group and the priorities in the priority group. Different priority groups on the same port can use different traffic control profiles, which provides fine tuned control of scheduling for each queue on each interface.

Figure 19: Hierarchical Scheduling Packet Flow

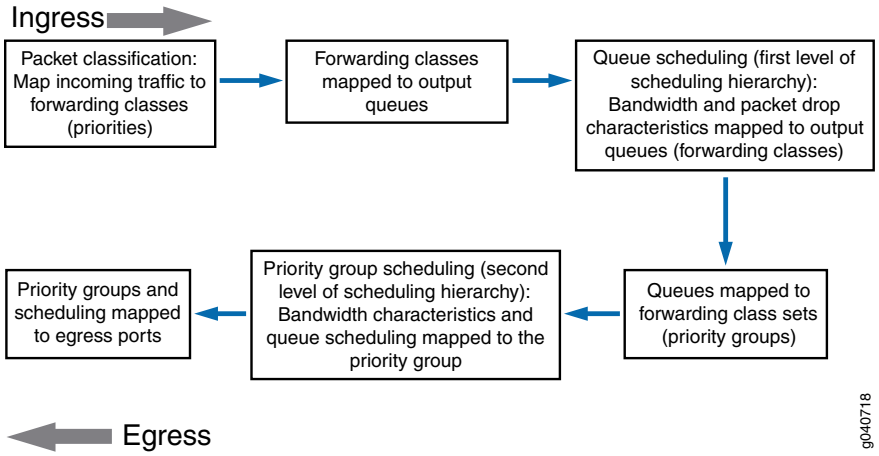

Strict-High Priority Queues and Hierarchical Scheduling

If you configure a strict-high priority queue, you must observe the following rules:

- You must create a separate forwarding class set (priority group) for the strict-high priority queue.
- Only one forwarding class set can contain strict-high priority queues.
- Strict-high priority queues cannot belong to the same forwarding class set as queues that are not strict-high priority.
- A strict-high priority queue cannot belong to a multidestination forwarding class set.
- We recommend that you always apply a **shaping-rate** (**transmit-rate** on QFX10000 switches) to strict-high priority queues to limit the amount of bandwidth a strict-high priority queue can use. If you do not limit the amount of bandwidth a strict-high priority queue can use, then the strict-high priority queue can use all of the available port bandwidth and starve other queues on the port.

NOTE: On a QFabric system, if a fabric (fte) interface handles strict-high priority traffic, you must define a separate forwarding class set (priority group) for strict-high priority traffic. Strict-high priority traffic cannot be mixed with traffic of other priorities in a forwarding class set. For example, you might choose to create different forwarding class sets for best effort, lossless, strict-high priority, and multidestination traffic.

Default Hierarchical Scheduling

NOTE: There is no default hierarchical scheduling on QFX10000 switches. QFX10000 switches use port scheduling by default, and you must explicitly configure hierarchical scheduling to enable ETS.

Copyright © 2018, Juniper Networks, Inc.

If you do not explicitly configure hierarchical scheduling, the switch uses the default settings:

- The switch automatically creates a default forwarding class set that contains all of the forwarding classes on the switch. The switch assigns 100 percent of the port output bandwidth to the default forwarding class set. The default forwarding class set is transparent. It does not appear in the configuration and is used for Data Center Bridging Capability Exchange protocol (DCBX) advertisement.

  NOTE: **OCX Series switches do not support DCBX, so the ETS configuration is not advertised to connected peers.**

- Ingress traffic is classified based on the default classifier settings.
- The forwarding classes (queues) in the default forwarding class set receive bandwidth based on the default scheduler settings.

Release History Table

Release	Description
17.3	Starting with Junos OS 17.3, QFX10000 devices support ETS scheduling.

Related Documentation

- Understanding CoS Packet Flow on page 25
- Understanding CoS Output Queue Schedulers on page 159
- Understanding CoS Priority Group Scheduling on page 184
- *Benefits of Configuring CoS Hierarchical Port Scheduling*
- Understanding CoS Flow Control (Ethernet PAUSE and PFC) on page 414
- Understanding CoS Classifiers on page 60
- Understanding Default CoS Scheduling and Classification on page 79
- Understanding CoS Scheduling on QFabric System Node Device Fabric (fte) Ports on page 149
- Understanding Default CoS Scheduling on QFabric System Interconnect Devices (Junos OS Release 13.1 and Later Releases) on page 265
- Example: Configuring CoS Hierarchical Port Scheduling (ETS) on page 198
- Example: Configuring Queue Schedulers on page 169
- Example: Configuring Traffic Control Profiles (Priority Group Scheduling) on page 188
- Example: Configuring Minimum Guaranteed Output Bandwidth on page 229
- Example: Configuring Maximum Output Bandwidth on page 236

Copyright © 2018, Juniper Networks, Inc.

Example: Configuring CoS Hierarchical Port Scheduling (ETS)

Hierarchical port scheduling defines the class-of-service (CoS) properties of output queues, which are mapped to forwarding classes. Traffic is classified into forwarding classes based on code point (priority), so mapping queues to forwarding classes also maps queues to priorities). Hierarchical port scheduling enables you to group priorities that require similar CoS treatment into priority groups. You define the port bandwidth resources for a priority group, and you define the amount of the priority group's resources that each priority in the group can use.

Hierarchical port scheduling is the Junos OS implementation of enhanced transmission selection (ETS), as described in IEEE 802.1Qaz. One major benefit of hierarchical port scheduling is greater port bandwidth utilization. If a priority group on a port does not use all of its allocated bandwidth, other priority groups on that port can use that bandwidth. Also, if a priority within a priority group does not use its allocated bandwidth, other priorities within that priority group can use that bandwidth.

Configuring hierarchical scheduling is a multistep procedure that includes:

- Mapping forwarding classes to queues
- Defining forwarding class sets (priority groups)
- Defining behavior aggregate classifiers
- Configuring priority-based flow control (PFC) for lossless priorities (queues)
- Applying classifiers and PFC configuration to ingress interfaces
- Defining drop profiles
- Defining schedulers
- Mapping forwarding classes to schedulers
- Defining traffic control profiles
- Assigning priority groups and traffic control profiles to egress ports

NOTE: OCX Series switches do not support lossless transport and do not support PFC. Although this example includes configuring lossless transport with PFC, the portions of the example that do not pertain to lossless transport still apply to OCX Series switches. (You can configure hierarchical scheduling on OCX Series switches, but you cannot configure lossless transport or lossless forwarding classes.)

This example describes how to configure hierarchical scheduling:

- Requirements on page 387
- Overview on page 387

 Copyright © 2018, Juniper Networks, Inc.

- Configuration on page 391
- Verification on page 402

Requirements

This example uses the following hardware and software components:

- One switch (this example was tested on a Juniper Networks QFX3500 Switch)
- Junos OS Release 11.1 or later for the QFX Series or Junos OS Release 14.1X53-D20 or later for the OCX Series

Overview

Keep the following considerations in mind when you plan the port bandwidth allocation for priority groups and for individual priorities:

- How much traffic and what types of traffic you expect to traverse the system.
- How you want to divide different types of traffic into priorities (forwarding classes) to apply different CoS treatment to different types of traffic. Dividing traffic into priorities includes:
  - Mapping the code points of ingress traffic to forwarding classes using behavior aggregate (BA) classifiers. This classifies incoming traffic into the appropriate forwarding class based on code point.
  - Mapping forwarding classes to output queues. This defines the output queue for each type of traffic.
  - Attaching the BA classifier to the desired ingress interfaces so that incoming traffic maps to the desired forwarding classes and queues.
- How you want to organize priorities into priority groups (forwarding class sets).

  Traffic that requires similar treatment usually belongs in the same priority group. To do this, place forwarding classes that require similar bandwidth, loss, and other characteristics in the same forwarding class set. For example, you can map all types of best-effort traffic forwarding classes into one forwarding class set.
- How much of the port bandwidth you want to allocate to each priority group and to each of the priorities in each priority group. The following considerations apply to bandwidth allocation:
  - Estimate how much traffic you expect in each forwarding class, and how much traffic you expect in each forwarding class set (the amount of traffic you expect in a forwarding class set is the aggregate amount of traffic in the forwarding classes that belong to the forwarding class set).
  - The combined minimum guaranteed bandwidth of the priorities (forwarding classes) in a priority group should not exceed the minimum guaranteed bandwidth of the priority group (forwarding class set). The transmit rate scheduler parameter defines the minimum guaranteed bandwidth for forwarding classes. Scheduler maps associate schedulers with forwarding classes.

Copyright © 2018, Juniper Networks, Inc.

- The combined minimum guaranteed bandwidth of the priority groups (forwarding class sets) on a port should not exceed the port's total bandwidth. The guaranteed rate parameter in the traffic control profile defines the minimum bandwidth for a forwarding class set. Associating a scheduler map with a traffic control profile sets the scheduling for the individual forwarding classes in the forwarding class set.

This example creates hierarchical port scheduling by defining priority groups for best effort, guaranteed delivery, and high-performance computing (HPC) traffic. Each priority group includes priorities that need to receive similar CoS treatment. Each priority group and each priority within each priority group receive the CoS resources needed to service their flows. Lossless priorities use PFC to prevent packet loss when the network experiences congestion.

Topology

Table 64 on page 201 shows the configuration components for this example.

NOTE: OCX Series switches do not support lossless transport and do not support PFC. If you eliminate the configuration elements for the default lossless **fcoe** and **no-loss** forwarding classes (including classifier, forwarding class set, scheduler, and traffic control profile configuration for those forwarding classes) and for PFC, this example works for OCX Series switches. However, because the default **fcoe** and **no-loss** forwarding classes do not carry traffic on OCX Series switches, you can apply the bandwidth allocated to those forwarding classes to other forwarding classes. By default, the active forwarding classes (**best-effort**, **network-control**, and **mcast**) share the unused bandwidth assigned to the **fcoe** and **no-loss** forwarding classes.

Table 87: Components of the Hierarchical Port Scheduling (ETS) Configuration Topology

Property	Settings
Hardware	QFX3500 switch

Copyright © 2018, Juniper Networks, Inc.

Table 87: Components of the Hierarchical Port Scheduling (ETS) Configuration Topology (continued)

Property	Settings
Mapping of forwarding classes (priorities) to queues	**best-effort** to queue **0** **be2** to queue **1** **fcoe** (Fibre Channel over Ethernet) to queue **3** **no-loss** to queue **4** **hpc** (high-performance computing) to queue **5** **network-control** to queue **7** NOTE: On switches that do not support the ELS CLI, if you are using Junos OS Release 12.2 or later, use the default forwarding-class-to-queue mapping for the lossless **fcoe** and **no-loss** forwarding classes. If you explicitly configure the default lossless forwarding classes, the traffic mapped to those forwarding classes is treated as lossy (**best-effort**) traffic and does *not* receive lossless treatment. On switches that do not support the ELS CLI, in Junos OS Release 12.3 and later, you can include the *no-loss* packet drop attribute in the explicit forwarding class configuration to configure a lossless forwarding class.
Forwarding class sets (priority groups)	**best-effort-pg**: contains forwarding classes **best-effort**, **be2**, and **network control** **guar-delivery-pg**: contains forwarding classes **fcoe** and **no-loss** **hpc-pg**: contains forwarding class **hpc**
Behavior aggregate classifier (maps forwarding classes and loss priorities to incoming packets by IEEE 802.1 code point)	Name—**hsclassifier1** Code point mapping: • **000** to forwarding class **best-effort** and loss priority **low** • **001** to forwarding class **be2** and loss priority **high** • **011** to forwarding class **fcoe** and loss priority **low** • **100** to forwarding class **no-loss** and loss priority **low** • **101** to forwarding class **hpc** and loss priority **low** • **110** to forwarding class **network-control** and loss priority **low**
PFC	Congestion notification profile name—**gd-cnp** PFC enabled on code points: **011** (**fcoe** priority), **010** (**no-loss** priority)
Drop profiles NOTE: The **fcoe** and **no-loss** priorities (queues) do not use drop profiles because they are lossless traffic classes.	**dp-be-low**: drop start point **25**, drop end point **50**, maximum drop rate **80** **dp-be-high**: drop start point **10**, drop end point **40**, maximum drop rate **100** **dp-hpc**: drop start point **75**, drop end point **90**, maximum drop rate **75** **dp-nc**: drop start point **80**, drop end point **100**, maximum drop rate **100**

Table 87: Components of the Hierarchical Port Scheduling (ETS) Configuration Topology (continued)

Property	Settings
Queue schedulers	**be-sched**: minimum bandwidth **3g**, maximum bandwidth **100**%, priority **low**, drop profiles **dp-be-low** and **dp-be-high** **fcoe-sched**: minimum bandwidth **2.5g**, maximum bandwidth **100**%, priority **low** **hpc-sched**: minimum bandwidth **2g**, maximum bandwidth **100**%, priority **low**, drop profile **dp-hpc** **nc-sched**: minimum bandwidth **500m**, maximum bandwidth **100**%, priority **low**, drop profile **dp-nc** **nl-sched**: minimum bandwidth **2g**, maximum bandwidth **100**%, priority **low**
Forwarding class-to-scheduler mapping	Scheduler map **be-map**: Forwarding class **best-effort**, scheduler **be-sched** Forwarding class **be2**, scheduler **be-sched** Forwarding class **network-control**, scheduler **nc-sched** Scheduler map **gd-map**: Forwarding class **fcoe**, scheduler **fcoe-sched** Forwarding class **no-loss**, scheduler **nl-sched** Scheduler map **hpc-map**: Forwarding class **hpc**, scheduler **hpc-sched**
Traffic control profiles	**be-tcp**: scheduler map **be-map**, minimum bandwidth **3.5g**, maximum bandwidth **100**% **gd-tcp**: scheduler map **gd-map**, minimum bandwidth **4.5g**, maximum bandwidth **100**% **hpc-tcp**: scheduler map **hpc-map**, minimum bandwidth **2g**, maximum bandwidth **100**%
Interfaces	This example configures hierarchical port scheduling on interfaces **xe-0/0/20** and **xe-0/0/21**. Because traffic is bidirectional, you apply the ingress and egress configuration components to both interfaces: • Classifier Name—**hsclassifier1** • Forwarding class sets—**best-effort-pg**, **guar-deliver-pg**, **hpc-pg** • Congestion notification profile—**gd-cnp**

Figure 7 on page 203 shows a block diagram of the configuration components and the configuration flow of the CLI statements used in the example. You can perform the configuration steps in a different sequence if you want.

Copyright © 2018, Juniper Networks, Inc.

Figure 20: Hierarchical Port Scheduling Components Block Diagram

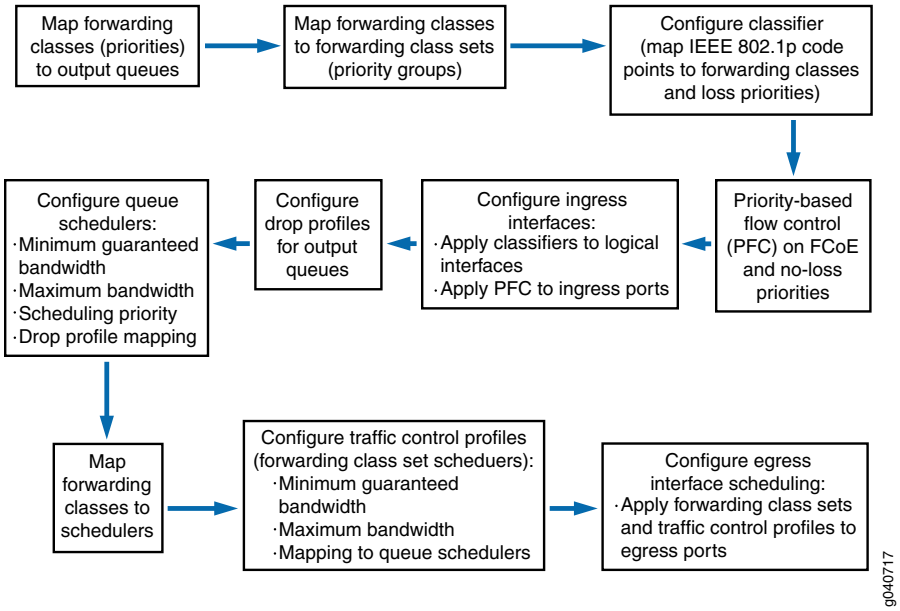

Figure 8 on page 204 shows a block diagram of the hierarchical scheduling packet flow from ingress to egress.

Figure 21: Hierarchical Port Scheduling Packet Flow Block Diagram

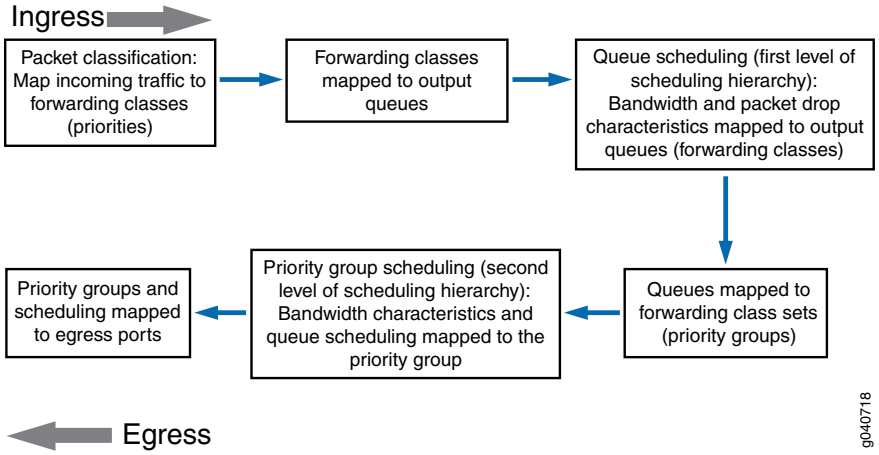

Configuration

CLI Quick Configuration

To quickly configure hierarchical port scheduling on systems that support lossless transport, copy the following commands, paste them in a text file, remove line breaks, change variables and details to match your network configuration, and then copy and paste the commands into the CLI at the [edit class-of-service] hierarchy level:

```
[edit class-of-service]
set forwarding-classes class best-effort queue-num 0
set forwarding-classes class be2 queue-num 1
set forwarding-classes class hpc queue-num 5
```

```
set forwarding-classes class network-control queue-num 7
set forwarding-class-sets best-effort-pg class best-effort
set forwarding-class-sets best-effort-pg class be2
set forwarding-class-sets best-effort-pg class network-control
set forwarding-class-sets guar-delivery-pg class fcoe
set forwarding-class-sets guar-delivery-pg class no-loss
set forwarding-class-sets hpc-pg class hpc
set classifiers ieee-802.1 hsclassifier1 forwarding-class best-effort loss-priority low code-points
000
set classifiers ieee-802.1 hsclassifier1 forwarding-class be2 loss-priority high code-points 001
set classifiers ieee-802.1 hsclassifier1 forwarding-class fcoe loss-priority low code-points 011
set classifiers ieee-802.1 hsclassifier1 forwarding-class no-loss loss-priority low code-points 100
set classifiers ieee-802.1 hsclassifier1 forwarding-class hpc loss-priority low code-points 101
set classifiers ieee-802.1 hsclassifier1 forwarding-class network-control loss-priority low
code-points 110
set congestion-notification-profile gd-cnp input ieee-802.1 code-point 011 pfc
set congestion-notification-profile gd-cnp input ieee-802.1 code-point 100 pfc
set interfaces xe-0/0/20 unit 0 classifiers ieee-802.1 hsclassifier1
set interfaces xe-0/0/21 unit 0 classifiers ieee-802.1 hsclassifier1
set interfaces xe-0/0/20 congestion-notification-profile gd-cnp
set interfaces xe-0/0/21 congestion-notification-profile gd-cnp
set drop-profiles dp-be-low interpolate fill-level 25 fill-level 50 drop-probability 0 drop-probability
80
set drop-profiles dp-be-high interpolate fill-level 10 fill-level 40 drop-probability 0 drop-probability
100
set drop-profiles dp-nc interpolate fill-level 80 fill-level 100 drop-probability 0 drop-probability
100
set drop-profiles dp-hpc interpolate fill-level 75 fill-level 90 drop-probability 0 drop-probability
75
set schedulers be-sched priority low transmit-rate 3g
set schedulers be-sched shaping-rate percent 100
set schedulers be-sched drop-profile-map loss-priority low protocol any drop-profile dp-be-low
set schedulers be-sched drop-profile-map loss-priority high protocol any drop-profile dp-be-high
set schedulers fcoe-sched priority low transmit-rate 2500m
set schedulers fcoe-sched shaping-rate percent 100
set schedulers hpc-sched priority low transmit-rate 2g
set schedulers hpc-sched shaping-rate percent 100
set schedulers hpc-sched drop-profile-map loss-priority low protocol any drop-profile dp-hpc
set schedulers nc-sched priority low transmit-rate 500m
set schedulers nc-sched shaping-rate percent 100
set schedulers nc-sched drop-profile-map loss-priority low protocol any drop-profile dp-nc
set schedulers nl-sched priority low transmit-rate 2g
set schedulers nl-sched shaping-rate percent 100
set scheduler-maps be-map forwarding-class best-effort scheduler be-sched
set scheduler-maps be-map forwarding-class be2 scheduler be-sched
set scheduler-maps be-map forwarding-class network-control scheduler nc-sched
set scheduler-maps gd-map forwarding-class fcoe scheduler fcoe-sched
set scheduler-maps gd-map forwarding-class no-loss scheduler nl-sched
set scheduler-maps hpc-map forwarding-class hpc scheduler hpc-sched
set traffic-control-profiles be-tcp scheduler-map be-map guaranteed-rate 3500m
set traffic-control-profiles be-tcp shaping-rate percent 100
set traffic-control-profiles gd-tcp scheduler-map gd-map guaranteed-rate 4500m
set traffic-control-profiles gd-tcp shaping-rate percent 100
set traffic-control-profiles hpc-tcp scheduler-map hpc-map guaranteed-rate 2g
set traffic-control-profiles hpc-tcp shaping-rate percent 100
set interfaces xe-0/0/20 forwarding-class-set best-effort-pg output-traffic-control-profile be-tcp
set interfaces xe-0/0/20 forwarding-class-set guar-delivery-pg output-traffic-control-profile
gd-tcp
set interfaces xe-0/0/20 forwarding-class-set hpc-pg output-traffic-control-profile hpc-tcp
set interfaces xe-0/0/21 forwarding-class-set best-effort-pg output-traffic-control-profile be-tcp
```


Copyright © 2018, Juniper Networks, Inc.

```
set interfaces xe-0/0/21 forwarding-class-set guar-delivery-pg output-traffic-control-profile
gd-tcp
set interfaces xe-0/0/21 forwarding-class-set hpc-pg output-traffic-control-profile hpc-tcp
```

OCX Series Switches

Because OCX Series switches do not support lossless transport, the following subset of the configuration eliminates the lossless configuration elements and provides hierarchical port scheduling for the best-effort, be2, hpc, and network-control forwarding classes. In addition, on OCX Series switches, you would probably use DSCP classifiers and code points instead of IEEE classifiers and code points. To quickly configure hierarchical port scheduling on an OCX Series switch, copy the following commands, paste them in a text file, remove line breaks, change variables and details to match your network configuration, and then copy and paste the commands into the CLI at the [edit class-of-service] hierarchy level:

```
[edit class-of-service]
set forwarding-classes class best-effort queue-num 0
set forwarding-classes class be2 queue-num 1
set forwarding-classes class hpc queue-num 5
set forwarding-classes class network-control queue-num 7
set forwarding-class-sets best-effort-pg class best-effort
set forwarding-class-sets best-effort-pg class be2
set forwarding-class-sets best-effort-pg class network-control
set forwarding-class-sets hpc-pg class hpc
set classifiers ieee-802.1 hsclassifier1 forwarding-class best-effort loss-priority low code-points
000
set classifiers ieee-802.1 hsclassifier1 forwarding-class be2 loss-priority high code-points 001
set classifiers ieee-802.1 hsclassifier1 forwarding-class hpc loss-priority low code-points 101
set classifiers ieee-802.1 hsclassifier1 forwarding-class network-control loss-priority low
code-points 110
set interfaces xe-0/0/20 unit 0 classifiers ieee-802.1 hsclassifier1
set interfaces xe-0/0/21 unit 0 classifiers ieee-802.1 hsclassifier1
set drop-profiles dp-be-low interpolate fill-level 25 fill-level 50 drop-probability 0 drop-probability
80
set drop-profiles dp-be-high interpolate fill-level 10 fill-level 40 drop-probability 0 drop-probability
100
set drop-profiles dp-nc interpolate fill-level 80 fill-level 100 drop-probability 0 drop-probability
100
set drop-profiles dp-hpc interpolate fill-level 75 fill-level 90 drop-probability 0 drop-probability
75
set schedulers be-sched priority low transmit-rate 3g
set schedulers be-sched shaping-rate percent 100
set schedulers be-sched drop-profile-map loss-priority low protocol any drop-profile dp-be-low
set schedulers be-sched drop-profile-map loss-priority high protocol any drop-profile dp-be-high
set schedulers hpc-sched priority low transmit-rate 2g
set schedulers hpc-sched shaping-rate percent 100
set schedulers hpc-sched drop-profile-map loss-priority low protocol any drop-profile dp-hpc
set schedulers nc-sched priority low transmit-rate 500m
set schedulers nc-sched shaping-rate percent 100
set schedulers nc-sched drop-profile-map loss-priority low protocol any drop-profile dp-nc
set scheduler-maps be-map forwarding-class best-effort scheduler be-sched
set scheduler-maps be-map forwarding-class be2 scheduler be-sched
set scheduler-maps be-map forwarding-class network-control scheduler nc-sched
set scheduler-maps hpc-map forwarding-class hpc scheduler hpc-sched
set traffic-control-profiles be-tcp scheduler-map be-map guaranteed-rate 3500m
set traffic-control-profiles be-tcp shaping-rate percent 100
set traffic-control-profiles hpc-tcp scheduler-map hpc-map guaranteed-rate 2g
```

```
set traffic-control-profiles hpc-tcp shaping-rate percent 100
set interfaces xe-0/0/20 forwarding-class-set best-effort-pg output-traffic-control-profile be-tcp
set interfaces xe-0/0/20 forwarding-class-set hpc-pg output-traffic-control-profile hpc-tcp
set interfaces xe-0/0/21 forwarding-class-set best-effort-pg output-traffic-control-profile be-tcp
set interfaces xe-0/0/21 forwarding-class-set hpc-pg output-traffic-control-profile hpc-tcp
```

Step-by-Step Procedure

To perform a step-by-step configuration of the forwarding classes (priorities), forwarding class sets (priority groups), classifiers, queue schedulers, PFC, traffic control profiles, and interfaces to set up hierarchical port scheduling (ETS):

1. Configure the forwarding classes (priorities) and map them to unicast output queues (do not explicitly map the **fcoe** and **no-loss** forwarding classes to output queues; use the default configuration):

```
[edit class-of-service]
user@switch# set forwarding-classes class best-effort queue-num 0
user@switch# set forwarding-classes class be2 queue-num 1
user@switch# set forwarding-classes class hpc queue-num 5
user@switch# set forwarding-classes class network-control queue-num 7
```

2. Configure forwarding class sets (priority groups) to group forwarding classes (priorities) that require similar CoS treatment:

```
[edit class-of-service]
user@switch# set forwarding-class-sets best-effort-pg class best-effort
user@switch# set forwarding-class-sets best-effort-pg class be2
user@switch# set forwarding-class-sets best-effort-pg class network-control
user@switch# set forwarding-class-sets guar-delivery-pg class fcoe
user@switch# set forwarding-class-sets guar-delivery-pg class no-loss
user@switch# set forwarding-class-sets hpc-pg class hpc
```

NOTE: On OCX Series switches, you would not configure the **guar-delivery-pg** forwarding class set for lossless traffic.

3. Configure a classifier to set the loss priority and IEEE 802.1 code points assigned to each forwarding class at the ingress:

```
[edit class-of-service]
user@switch# set classifiers ieee-802.1 hsclassifier1 forwarding-class best-effort
loss-priority low code-points 000
user@switch# set classifiers ieee-802.1 hsclassifier1 forwarding-class be2 loss-priority
high code-points 001
user@switch# set classifiers ieee-802.1 hsclassifier1 forwarding-class fcoe loss-priority
low code-points 011
user@switch# set classifiers ieee-802.1 hsclassifier1 forwarding-class no-loss loss-priority
low code-points 100
user@switch# set classifiers ieee-802.1 hsclassifier1 forwarding-class hpc loss-priority low
code-points 101
user@switch# set classifiers ieee-802.1 hsclassifier1 forwarding-class network-control
loss-priority low code-points 110
```


Copyright © 2018, Juniper Networks, Inc.

NOTE: On OCX Series switches, you would not configure the **fcoe** and **no-loss** portions of the classifier.

4. Configure a congestion notification profile to enable PFC on the FCoE and no-loss queue IEEE 802.1 code points:

```
[edit class-of-service]
user@switch# set congestion-notification-profile gd-cnp input ieee-802.1 code-point 011
pfc
user@switch# set congestion-notification-profile gd-cnp input ieee-802.1 code-point 100
pfc
```

NOTE: This step does not apply to OCX Series switches, which do not support PFC.

5. Assign the classifier to the interfaces:

```
[edit class-of-service]
user@switch# set interfaces xe-0/0/20 unit 0 classifiers ieee-802.1 hsclassifier1
user@switch# set interfaces xe-0/0/21 unit 0 classifiers ieee-802.1 hsclassifier1
```

6. Apply the PFC configuration to the interfaces:

```
[edit class-of-service]
user@switch# set interfaces xe-0/0/20 congestion-notification-profile gd-cnp
user@switch# set interfaces xe-0/0/21 congestion-notification-profile gd-cnp
```

NOTE: This step does not apply to OCX Series switches, which do not support PFC.

7. Configure the drop profile for the best-effort low loss-priority queue:

```
[edit class-of-service]
user@switch# set drop-profiles dp-be-low interpolate fill-level 25 fill-level 50
drop-probability 0 drop-probability 80
```

8. Configure the drop profile for the best-effort high loss-priority queue:

```
[edit class-of-service]
user@switch# set drop-profiles dp-be-high interpolate fill-level 10 fill-level 40
drop-probability 0 drop-probability 100
```

9. Configure the drop profile for the network-control queue:

```
[edit class-of-service]
user@switch# set drop-profiles dp-nc interpolate fill-level 80 fill-level 100 drop-probability
0 drop-probability 100
```

10. Configure the drop profile for the high-performance computing queue:

```
[edit class-of-service]
user@switch# set drop-profiles dp-hpc interpolate fill-level 75 fill-level 90 drop-probability
0 drop-probability 75
```

11. Define the minimum guaranteed bandwidth, priority, maximum bandwidth, and drop profiles for the best-effort queue:

```
[edit class-of-service]
user@switch# set schedulers be-sched priority low transmit-rate 3g
user@switch# set schedulers be-sched shaping-rate percent 100
user@switch# set schedulers be-sched drop-profile-map loss-priority low protocol any
drop-profile dp-be-low
user@switch# set schedulers be-sched drop-profile-map loss-priority high protocol any
drop-profile dp-be-high
```

12. Define the minimum guaranteed bandwidth, priority, and maximum bandwidth for the FCoE queue:

```
[edit class-of-service]
user@switch# set schedulers fcoe-sched priority low transmit-rate 2500m
user@switch# set schedulers fcoe-sched shaping-rate percent 100
```

NOTE: This step does not apply to OCX Series switches, which do not support lossless transport.

13. Define the minimum guaranteed bandwidth, priority, maximum bandwidth, and drop profile for the high-performance computing queue:

```
[edit class-of-service]
user@switch# set schedulers hpc-sched priority low transmit-rate 2g
user@switch# set schedulers hpc-sched shaping-rate percent 100
user@switch# set schedulers hpc-sched drop-profile-map loss-priority low protocol any
drop-profile dp-hpc
```

14. Define the minimum guaranteed bandwidth, priority, maximum bandwidth, and drop profile for the network-control queue:

```
[edit class-of-service]
user@switch# set schedulers nc-sched priority low transmit-rate 500m
user@switch# set schedulers nc-sched shaping-rate percent 100
```


Copyright © 2018, Juniper Networks, Inc.

```
user@switch# set schedulers nc-sched drop-profile-map loss-priority low protocol any
drop-profile dp-nc
```

15. Define the minimum guaranteed bandwidth, priority, and maximum bandwidth for the no-loss queue:

```
[edit class-of-service]
user@switch# set schedulers nl-sched priority low transmit-rate 2g
user@switch# set schedulers nl-sched shaping-rate percent 100
```

NOTE: This step does not apply to OCX Series switches, which do not support lossless transport.

16. Map the schedulers to the appropriate forwarding classes (queues):

```
[edit class-of-service]
user@switch# set scheduler-maps be-map forwarding-class best-effort scheduler be-sched
user@switch# set scheduler-maps be-map forwarding-class be2 scheduler be-sched
user@switch# set scheduler-maps be-map forwarding-class network-control scheduler
nc-sched
user@switch# set scheduler-maps gd-map forwarding-class fcoe scheduler fcoe-sched
user@switch# set scheduler-maps gd-map forwarding-class no-loss scheduler nl-sched
user@switch# set scheduler-maps hpc-map forwarding-class hpc scheduler hpc-sched
```

NOTE: On OCX Series switches, because lossless transport is not supported, you would not configure the gd-map scheduler map.

17. Define the traffic control profile for the best-effort priority group (queue scheduler to mapping, minimum guaranteed bandwidth, and maximum bandwidth):

```
[edit class-of-service]
user@switch# set traffic-control-profiles be-tcp scheduler-map be-map guaranteed-rate
3500m
user@switch# set traffic-control-profiles be-tcp shaping-rate percent 100
```

18. Define the traffic control profile for the guaranteed delivery priority group (queue to scheduler mapping, minimum guaranteed bandwidth, and maximum bandwidth):

```
[edit class-of-service]
user@switch# set traffic-control-profiles gd-tcp scheduler-map gd-map guaranteed-rate
4500m
user@switch# set traffic-control-profiles gd-tcp shaping-rate percent 100
```

NOTE: This step does not apply to OCX Series switches, which do not support lossless transport.

19. Define the traffic control profile for the high-performance computing priority group (queue to scheduler mapping, minimum guaranteed bandwidth, and maximum bandwidth):

```
[edit class-of-service]
user@switch# set traffic-control-profiles hpc-tcp scheduler-map hpc-map guaranteed-rate
2g
user@switch# set traffic-control-profiles hpc-tcp shaping-rate percent 100
```

20. Apply the three priority groups (forwarding class sets) and the appropriate traffic control profiles to the egress ports:

```
[edit class-of-service]
user@switch# set interfaces xe-0/0/20 forwarding-class-set best-effort-pg
output-traffic-control-profile be-tcp
user@switch# set interfaces xe-0/0/20 forwarding-class-set guar-delivery-pg
output-traffic-control-profile gd-tcp
user@switch# set interfaces xe-0/0/20 forwarding-class-set hpc-pg
output-traffic-control-profile hpc-tcp
user@switch# set interfaces xe-0/0/21 forwarding-class-set best-effort-pg
output-traffic-control-profile be-tcp
user@switch# set interfaces xe-0/0/21 forwarding-class-set guar-delivery-pg
output-traffic-control-profile gd-tcp
user@switch# set interfaces xe-0/0/21 forwarding-class-set hpc-pg
output-traffic-control-profile hpc-tcp
```

NOTE: Because OCX Series switches do not support lossless transport, on OCX Series switches, you would not apply the **guar-deliver-pg** forwarding class set and the **gd-tcp** traffic control profile to interfaces.

Results

Display the results of the configuration (the system shows only the explicitly configured parameters; it does not show default parameters such as the **fcoe** and **no-loss** lossless forwarding classes). On OCX Series switches, you would not see the lossless configuration components in the output:

```
user@switch> show configuration class-of-service
classifiers {
   ieee-802.1 hsclassifier1 {
      forwarding-class best-effort {
```


Copyright © 2018, Juniper Networks, Inc.

```
        loss-priority low code-points 000;
    }
    forwarding-class be2 {
        loss-priority high code-points 001;
    }
    forwarding-class fcoe {
        loss-priority low code-points 011;
    }
    forwarding-class no-loss {
        loss-priority low code-points 100;
    }
    forwarding-class hpc {
        loss-priority low code-points 101;
    }
    forwarding-class network-control {
        loss-priority low code-points 110;
    }
}
drop-profiles {
    dp-be-low {
        interpolate {
            fill-level [ 25 50 ];
            drop-probability [ 0 80 ];
        }
    }
    dp-be-high {
        interpolate {
            fill-level [ 10 40 ];
            drop-probability [ 0 100 ];
        }
    }
    dp-hpc {
        interpolate {
            fill-level [ 75 90 ];
            drop-probability [ 0 75 ];
        }
    }
    dp-nc {
        interpolate {
            fill-level [ 80 100 ];
            drop-probability [ 0 100 ];
        }
    }
}
forwarding-classes {
    class best-effort queue-num 0;
    class be2 queue-num 1;
    class hpc queue-num 5;
    class network-control queue-num 7;
}
traffic-control-profiles {
    be-tcp {
        scheduler-map be-map;
        shaping-rate percent 100;
        guaranteed-rate 3500000000;
```

```
    }
    gd-tcp {
        scheduler-map gd-map;
        shaping-rate percent 100;
        guaranteed-rate 4500000000;
    }
    hpc-tcp {
        scheduler-map hpc-map;
        shaping-rate percent 100;
        guaranteed-rate 2g;
    }
}
forwarding-class-sets {
    guar-delivery-pg {
        class fcoe;
        class no-loss;
    }
    best-effort-pg {
        class best-effort;
        class be2;
        class network-control;
    }
    hpc-pg {
        class hpc;
    }
}
congestion-notification-profile {
    gd-cnp {
        input {
            ieee-802.1 {
                code-point 011 {
                    pfc;
                }
                code-point 100 {
                    pfc;
                }
            }
        }
    }
}
interfaces {
    xe-0/0/20 {
        forwarding-class-set {
            best-effort-pg {
                output-traffic-control-profile be-tcp;
            }
            guar-delivery-pg {
                output-traffic-control-profile gd-tcp;
            }
            hpc-pg {
                output-traffic-control-profile hpc-tcp;
            }
        }
        congestion-notification-profile gd-cnp;
        unit 0 {
```


Copyright © 2018, Juniper Networks, Inc.

```
            classifiers {
                ieee-802.1 hsclassifier1;
            }
        }
    }
    xe-0/0/21 {
        forwarding-class-set {
            best-effort-pg {
                output-traffic-control-profile be-tcp;
            }
            guar-delivery-pg {
                output-traffic-control-profile gd-tcp;
            }
            hpc-pg {
                output-traffic-control-profile hpc-tcp;
            }
        }
        congestion-notification-profile gd-cnp;
        unit 0 {
            classifiers {
                ieee-802.1 hsclassifier1;
            }
        }
    }
}
scheduler-maps {
    be-map {
        forwarding-class best-effort scheduler be-sched;
        forwarding-class network-control scheduler nc-sched;
        forwarding-class be2 scheduler be-sched;
    }
    gd-map {
        forwarding-class fcoe scheduler fcoe-sched;
        forwarding-class no-loss scheduler nl-sched;
    }
    hpc-map {
        forwarding-class hpc scheduler hpc-sched;
    }
}
schedulers {
    be-sched {
        transmit-rate 3g;
        shaping-rate percent 100;
        priority low;
        drop-profile-map loss-priority low protocol any drop-profile dp-be-low;
        drop-profile-map loss-priority high protocol any drop-profile dp-be-high;
    }
    fcoe-sched {
        transmit-rate 2500000000;
        shaping-rate percent 100;
        priority low;
    }
    hpc-sched {
        transmit-rate 2g;
        shaping-rate percent 100;
```

```
        priority low;
        drop-profile-map loss-priority low protocol any drop-profile dp-hpc;
      }
      nc-sched {
        transmit-rate 500m;
        shaping-rate percent 100;
        priority low;
        drop-profile-map loss-priority low protocol any drop-profile dp-nc;
      }
      nl-sched {
        transmit-rate 2g;
        shaping-rate percent 100;
        priority low;
      }
    }
```

TIP: To quickly configure the interfaces, issue the **load merge terminal** command, and then copy the hierarchy and paste it into the switch terminal window.

Verification

NOTE: The verification output is based on the full example configuration. On OCX Series switches, you do not see lossless configuration components in the output. Comments about lossless configuration components do not apply to OCX Series switches.

To verify that you created the hierarchical port scheduling components and they are operating properly, perform these tasks:

- Verifying the Forwarding Classes (Priorities) on page 402
- Verifying the Forwarding Class Sets (Priority Groups) on page 403
- Verifying the Classifier on page 404
- Verifying Priority-Based Flow Control on page 404
- Verifying the Output Queue Schedulers on page 405
- Verifying the Drop Profiles on page 408
- Verifying the Priority Group Output Schedulers (Traffic Control Profiles) on page 409
- Verifying the Interface Configuration on page 410

Verifying the Forwarding Classes (Priorities)

Purpose Verify that you created the forwarding classes and mapped them to the correct queues. (The system shows only the explicitly configured forwarding classes. It does not show default forwarding classes such as **fcoe** and **no-loss**.)

Copyright © 2018, Juniper Networks, Inc.

Action List the forwarding classes using the operational mode command **show class-of-service forwarding-class**:

```
user@switch> show class-of-service forwarding-class
Forwarding class                      ID      Queue  Policing priority  No-Loss

  best-effort                         0         0         normal        Disabled

  be2                                 1         3         normal        Disabled

  hpc                                 2         4         normal        Disabled

  network-control                     3         7         normal        Disabled

  mcast                               8         8         normal        Disabled
```

Meaning The **show class-of-service forwarding-class** command lists all of the configured forwarding classes, the internal identification number of each forwarding class, the queues that are mapped to the forwarding classes, the policing priority, and whether the forwarding class is lossless (no-loss packet drop attribute enabled) or lossy forwarding class (no-loss packet drop attribute disabled). The command output shows that:

- Forwarding class **best-effort** maps to queue **0** and is lossy
- Forwarding class **be2** maps to queue **1** and is lossy
- Forwarding class **hpc** maps to queue **5** and is lossy
- Forwarding class **network-control** maps to queue **7** and is lossy

In addition, the command lists the default multicast (multidestination) forwarding class and the default queue to which it is mapped.

Verifying the Forwarding Class Sets (Priority Groups)

Purpose Verify that you created the priority groups and that the correct priorities (forwarding classes) belong to the appropriate priority group.

Action List the forwarding class sets using the operational mode command **show class-of-service forwarding-class-set**:

```
user@switch> show class-of-service forwarding-class-set
Forwarding class set: best-effort-pg, Type: normal-type, Forwarding class set
index: 19907
  Forwarding class                      Index
  best-effort                             0
  be2                                     1
  network-control                         5

Forwarding class set: guar-delivery-pg, Type: normal-type, Forwarding class set
index: 43700
  Forwarding class                      Index
```

```
  fcoe                                    2
  no-loss                                 3

Forwarding class set: hpc-pg, Type: normal-type, Forwarding class set index: 60758

  Forwarding class                       Index
  hpc                                     4
```

Meaning The **show class-of-service forwarding-class-set** command lists all of the configured forwarding class sets (priority groups), the forwarding classes (priorities) that belong to each priority group, and the internal index number of each priority group. The command output shows that:

- The forwarding class set **best-effort-pg** includes the forwarding classes **best-effort**, **be2**, and **network-control**.
- The forwarding class set **guar-delivery-pg** includes the forwarding classes **fcoe** and **no-loss**.
- The forwarding class set **hpc-pg** includes the forwarding class **hpc**.

Verifying the Classifier

Purpose Verify that the classifier maps forwarding classes to the correct IEEE 802.1p code points and packet loss priorities.

Action List the classifier configured for hierarchical port scheduling using the operational mode command **show class-of-service classifier name hsclassifier1**:

```
user@switch> show class-of-service classifier name hsclassifier1
```

```
Classifier: hsclassifier1, Code point type: ieee-802.1, Index: 43607
  Code point         Forwarding class                    Loss priority
  000                best-effort                         low
  001                be2                                 high
  011                fcoe                                low
  100                no-loss                             low
  101                hpc                                 low
  110                network-control                     low
```

Meaning The **show class-of-service classifier name hsclassifier1** command lists all of the IEEE 802.1p code points and the loss priorities mapped to all of the forwarding classes in the classifier. The command output shows that the forwarding classes **best-effort**, **be2**, **no-loss**, **fcoe**, **hpc**, and **network-control** have been created and mapped to IEEE 802.1p code points and loss priorities.

Verifying Priority-Based Flow Control

Purpose Verify that PFC is enabled on the correct priorities for lossless transport.

 Copyright © 2018, Juniper Networks, Inc.

Action List the congestion notification profiles using the operational mode command **show class-of-service congestion-notification**:

```
user@switch> show class-of-service congestion-notification
Type: Input, Name: gd-cnp, Index: 51687
Cable Length: 100 m
  Priority     PFC          MRU
  000          Disabled
  001          Disabled
  010          Disabled
  011          Enabled      2500
  100          Enabled      2500
  101          Disabled
  110          Disabled
  111          Disabled
Type: Output
  Priority     Flow-Control-Queues
  000
               0
  001
               1
  010
               2
  011
               3
  100
               4
  101
               5
  110
               6
  111
               7
```

Meaning The **show class-of-service congestion-notification** command lists all of the congestion notification profiles and the IEEE 802.1p code points with PFC enabled. The command output shows that PFC is enabled for code points **011** (**fcoe** priority and queue) and **100** (**no-loss** priority and queue) for the **gd-cnp** congestion notification profile.

The command also shows the default cable length (100 meters), the default maximum receive unit (2500 bytes), and the default mapping of priorities to output queues because this example does not include configuring these options.

Verifying the Output Queue Schedulers

Purpose Verify that you created the output queue schedulers with the correct bandwidth parameters and priorities, mapped to the correct queues, and mapped to the correct drop profiles.

Action List the scheduler maps using the operational mode command **show class-of-service scheduler-map**:

```
user@switch> show class-of-service scheduler-map
Scheduler map: be-map, Index: 64023

  Scheduler: be-sched, Forwarding class: best-effort, Index: 13005
    Transmit rate: 3000000000 bps, Rate Limit: none, Buffer size: remainder,
    Buffer Limit: none, Priority: low
    Excess Priority: unspecified
    Shaping rate: 100 percent,
    drop-profile-map-set-type: mark
    Drop profiles:
      Loss priority   Protocol    Index    Name
      Low             any         55387    dp-be-low
      Medium high     any             1    <default-drop-profile>
      High            any          4369    dp-be-high

  Scheduler: be-sched, Forwarding class: be2, Index: 13005
    Transmit rate: 3000000000 bps, Rate Limit: none, Buffer size: remainder,
    Buffer Limit: none, Priority: low
    Excess Priority: unspecified
    Shaping rate: 100 percent,
    drop-profile-map-set-type: mark
    Drop profiles:
      Loss priority   Protocol    Index    Name
      Low             any         55387    dp-be-low
      Medium high     any             1    <default-drop-profile>
      High            any          4369    dp-be-high

  Scheduler: nc-sched, Forwarding class: network-control, Index: 45740
    Transmit rate: 500000000 bps, Rate Limit: none, Buffer size: remainder,
    Buffer Limit: none, Priority: low
    Excess Priority: unspecified
    Shaping rate: 100 percent,
    drop-profile-map-set-type: mark
    Drop profiles:
      Loss priority   Protocol    Index    Name
      Low             any         44207    dp-nc
      Medium high     any             1    <default-drop-profile>
      High            any             1    <default-drop-profile>

Scheduler map: gd-map, Index: 61447

  Scheduler: fcoe-sched, Forwarding class: fcoe, Index: 37289
    Transmit rate: 2500000000 bps, Rate Limit: none, Buffer size: remainder,
    Buffer Limit: none, Priority: low
    Excess Priority: unspecified
    Shaping rate: 100 percent,
    drop-profile-map-set-type: mark
    Drop profiles:
      Loss priority   Protocol    Index    Name
      Low             any         44207    <default-drop-profile>
      Medium high     any             1    <default-drop-profile>
      High            any             1    <default-drop-profile>

  Scheduler: nl-sched, Forwarding class: no-loss, Index: 29359
    Transmit rate: 2000000000 bps, Rate Limit: none, Buffer size: remainder,
    Buffer Limit: none, Priority: low
    Excess Priority: unspecified
```

 Copyright © 2018, Juniper Networks, Inc.

```
    Shaping rate: 100 percent,
    drop-profile-map-set-type: mark
    Drop profiles:
      Loss priority   Protocol    Index    Name
      Low             any         44207    <default-drop-profile>
      Medium high     any             1    <default-drop-profile>
      High            any             1    <default-drop-profile>

Scheduler map: hpc-map, Index: 56941

  Scheduler: hpc-sched, Forwarding class: hpc, Index: 55900
    Transmit rate: 2000000000 bps, Rate Limit: none, Buffer size: remainder,
    Buffer Limit: none, Priority: low
    Excess Priority: unspecified
    Shaping rate: 100 percent,
    drop-profile-map-set-type: mark
    Drop profiles:
      Loss priority   Protocol    Index    Name
      Low             any         57716    dp-hpc
      Medium high     any             1    <default-drop-profile>
      High            any             1    <default-drop-profile>
```

Meaning The **show class-of-service scheduler-map** command lists all of the configured scheduler maps. For each scheduler map, the command output includes:

- The name of the scheduler map (**scheduler-map** field)
- The name of the scheduler (**scheduler** field)
- The forwarding classes mapped to the scheduler (**forwarding-class** field)
- The minimum guaranteed queue bandwidth (**transmit-rate** field)
- The scheduling priority (**priority** field)
- The maximum bandwidth in the priority group the queue can consume (**shaping-rate** field)
- The drop profile loss priority (**loss priority** field) for each drop profile name (**name** field)

The command output shows that:

- The scheduler map **be-map** was created and has these properties:
  - There are two schedulers, **be-sched** and **nc-sched**.
  - The scheduler **be-sched** has two forwarding classes, **best-effort** and **be2**.
  - Scheduler **be-sched** forwarding classes **best-effort** and **be2** share a minimum guaranteed bandwidth of **3,000,000,000 bps**, can consume a maximum of **100 percent** of the priority group bandwidth, and use the drop profile **dp-be-low** for low loss-priority traffic, the default drop profile for medium-high loss-priority traffic, and the drop profile **dp-be-high** for high loss-priority traffic.

  - The scheduler **nc-sched** has one forwarding class, **network-control**.
  - The **network-control** forwarding class has a minimum guaranteed bandwidth of **500,000,000 bps**, can consume a maximum of **100 percent** of the priority group bandwidth, and uses the drop profile **dp-nc** for low loss-priority traffic and the default drop profile for medium-high and high loss priority traffic.
- The scheduler map **gd-map** was created and has these properties:
  - There are two schedulers, **fcoe-sched** and **nl-sched**.
  - The scheduler **fcoe-sched** has one forwarding class, **fcoe**.
  - The **fcoe** forwarding class has a minimum guaranteed bandwidth of **2,500,000,000 bps**, and can consume a maximum of **100 percent** of the priority group bandwidth.
  - The scheduler **nl-sched** has one forwarding class, **no-loss**.
  - The **no-loss** forwarding class has a minimum guaranteed bandwidth of **2,000,000,000 bps**, and can consume a maximum of **100 percent** of the priority group bandwidth.
- The scheduler map **hpc-map** was created and has these properties:
  - There is one scheduler, **hpc-sched**.
  - The scheduler **hpc-sched** has one forwarding class, **hpc**.
  - The **hpc** forwarding class has a minimum guaranteed bandwidth of **2,000,000,000 bps**, can consume a maximum of **100 percent** of the priority group bandwidth, and uses the drop profile **dp-hpc** for low loss-priority traffic and the default drop profile for medium-high and high loss-priority traffic.

Verifying the Drop Profiles

Purpose Verify that you created the drop profiles **dp-be-high**, **dp-be-low**, **dp-hpc**, and **dp-nc** with the correct fill levels and drop probabilities.

Copyright © 2018, Juniper Networks, Inc.

Action List the drop profiles using the operational mode command **show configuration class-of-service drop-profiles**:

```
user@switch> show configuration class-of-service drop-profiles
dp-be-low {
    interpolate {
        fill-level [ 25 50 ];
        drop-probability [ 0 80 ];
    }
}
dp-be-high {
    interpolate {
        fill-level [ 10 40 ];
        drop-probability [ 0 100 ];
    }
}
dp-hpc {
    interpolate {
        fill-level [ 75 90 ];
        drop-probability [ 0 75 ];
    }
}
dp-nc {
    interpolate {
        fill-level [ 80 100 ];
        drop-probability [ 0 100 ];
    }
```

Meaning The **show configuration class-of-service drop-profiles** command lists the drop profiles and their properties. The command output shows that there are four drop profiles configured, **dp-be-high**, **dp-be-low**, **dp-hpc**, and **dp-nc**. The output also shows that:

- For **dp-be-low**, the drop start point (the first fill level) is when the queue is 25 percent filled, the drop end point (the second fill level) occurs when the queue is 50 percent filled, and the drop probability at the drop end point is 80 percent.
- For **dp-be-high**, the drop start point (the first fill level) is when the queue is 10 percent filled, the drop end point (the second fill level) occurs when the queue is 40 percent filled, and the drop probability at the drop end point is 100 percent.
- For **dp-hpc**, the drop start point (the first fill level) is when the queue is 75 percent filled, the drop end point (the second fill level) occurs when the queue is 90 percent filled, and the drop probability at the drop end point is 75 percent.
- For **dp-nc**, the drop start point (the first fill level) is when the queue is 80 percent filled, the drop end point (the second fill level) occurs when the queue is 100 percent filled, and the drop probability at the drop end point is 100 percent.

Verifying the Priority Group Output Schedulers (Traffic Control Profiles)

Purpose Verify that you created the traffic control profiles **be-tcp**, **gd-tcp**, and **hpc-tcp** with the correct bandwidth parameters and scheduler mapping.

Action List the traffic control profiles using the operational mode command **show class-of-service traffic-control-profile**:

```
user@switch> show class-of-service traffic-control-profile
Traffic control profile: be-tcp, Index: 40535
  Shaping rate: 100 percent
  Scheduler map: be-map
  Guaranteed rate: 3500000000

Traffic control profile: gd-tcp, Index: 37959
  Shaping rate: 100 percent
  Scheduler map: gd-map
  Guaranteed rate: 4500000000

Traffic control profile: hpc-tcp, Index: 47661
  Shaping rate: 100 percent
  Scheduler map: hpc-map
  Guaranteed rate: 2000000000
```

Meaning The **show class-of-service traffic-control-profile** command lists all of the configured traffic control profiles. For each traffic control profile, the command output includes:

- The name of the traffic control profile (**traffic-control-profile**)
- The maximum port bandwidth the priority group can consume (**shaping-rate**)
- The scheduler map associated with the traffic control profile (**scheduler-map**)
- The minimum guaranteed priority group port bandwidth (**guaranteed-rate**)

The command output shows that:

- The traffic control profile **be-tcp** can consume a maximum of **100 percent** of the port bandwidth, is associated with the scheduler map **be-map**, and has a minimum guaranteed bandwidth of **3,500,000,000 bps**.
- The traffic control profile **gd-tcp** can consume a maximum of **100 percent** of the port bandwidth, is associated with the scheduler map **gd-map**, and has a minimum guaranteed bandwidth of **4,500,000,000 bps**.
- The traffic control profile **hpc-tcp** can consume a maximum of **100 percent** of the port bandwidth, is associated with the scheduler map **hpc-map**, and has a minimum guaranteed bandwidth of **2,000,000,000 bps**.

Verifying the Interface Configuration

Purpose Verify that the classifier, the congestion notification profile, and the forwarding class sets are configured on interfaces **xe-0/0/20** and **xe-0/0/21**.

 Copyright © 2018, Juniper Networks, Inc.

Action List the interfaces using the operational mode commands **show configuration class-of-service interfaces xe-0/0/20** and **show configuration class-of-service interfaces xe-0/0/21**:

```
user@switch> show configuration class-of-service interfaces xe-0/0/20
forwarding-class-set {
    best-effort-gp {
        output-traffic-control-profile be-tcp;
    }
    guar-delivery-pg {
        output-traffic-control-profile gd-tcp;
    }
    hpc-pg {
        output-traffic-control-profile hpc-tcp;
    }
}
congestion-notification-profile gd_cnp;
unit 0 {
    classifiers {
        ieee-802.1 hsclassifier1;
    }
}
```

```
user@switch> show configuration class-of-service interfaces xe-0/0/21
forwarding-class-set {
    best-effort-gp {
        output-traffic-control-profile be-tcp;
    }
    guar-delivery-pg {
        output-traffic-control-profile gd-tcp;
    }
    hpc-pg {
        output-traffic-control-profile hpc-tcp;
    }
}
congestion-notification-profile gd_cnp;
unit 0 {
    classifiers {
        ieee-802.1 hsclassifier1;
    }
}
```

Meaning The **show configuration class-of-service interfaces** ***interface-name*** command shows that each interface includes the forwarding class sets **best-effort-pg**, **guar-delivery-pg**, and **hpc-pg**, congestion notification profile **gd-cnp**, and the IEEE 802.1p classifier **hsclassifier1**.

Related Documentation

- Defining CoS BA Classifiers (DSCP, DSCP IPv6, IEEE 802.1p) on page 69
- *Benefits of Configuring CoS Hierarchical Port Scheduling*
- Assigning CoS Components to Interfaces on page 23
- Example: Configuring WRED Drop Profiles on page 252

- Example: Configuring Drop Profile Maps on page 258
- Example: Configuring Forwarding Classes on page 113
- Example: Configuring Forwarding Class Sets on page 120
- Example: Configuring Queue Schedulers on page 169
- Example: Configuring Queue Scheduling Priority on page 178
- Example: Configuring Traffic Control Profiles (Priority Group Scheduling) on page 188
- Example: Configuring Minimum Guaranteed Output Bandwidth on page 229
- Example: Configuring Maximum Output Bandwidth on page 236
- Configuring CoS PFC (Congestion Notification Profiles) on page 429
- Overview of CoS Changes Introduced in Junos OS Release 12.2 on page 54
- Understanding CoS Hierarchical Port Scheduling (ETS) on page 192
- Understanding CoS Scheduling Behavior and Configuration Considerations on page 153
- Understanding CoS Scheduling on QFabric System Node Device Fabric (fte) Ports on page 149
- Understanding Default CoS Scheduling on QFabric System Interconnect Devices (Junos OS Release 13.1 and Later Releases) on page 265

 Copyright © 2018, Juniper Networks, Inc.

Disabling the ETS Recommendation TLV

The enhanced transmission selection (ETS) Recommendation TLV communicates the ETS settings that the switch wants the connected peer interface to use. If the peer interface is "willing," the peer interface changes its configuration to match the configuration in the ETS Recommendation TLV. By default, the switch interfaces send the ETS Recommendation TLV to the peer. The settings communicated are the egress ETS settings defined by configuring hierarchical scheduling on the interface.

We recommend that you use the same ETS settings on the connected peer that you use on the switch interface and that you leave the ETS Recommendation TLV enabled. However, on interfaces that use IEEE DCBX as the DCBX mode, if you want an asymmetric configuration between the switch interface and the connected peer, you can disable the ETS Recommendation TLV.

NOTE: **Disabling the ETS Recommendation TLV on interfaces that use DCBX version 1.01 as the DCBX mode has no effect and does not change DCBX behavior.**

If you disable the ETS Recommendation TLV, the switch still sends the ETS Configuration TLV to the connected peer. The result is that the connected peer is informed about the switch DCBX ETS configuration, but even if the peer is "willing," the peer does not change its configuration to match the switch configuration. This is asymmetric configuration—the two interfaces can have different parameter values for the ETS attribute.

To disable the ETS Recommendation TLV:

- `[edit protocols dcbx interface interface-name]`
  `user@switch#` **set enhanced-transmission-selection no-recommendation-tlv**

Related Documentation

- Configuring the DCBX Mode on page 542
- Configuring DCBX Autonegotiation on page 543
- Understanding DCBX on page 533
- *Understanding Data Center Bridging Capability Exchange Protocol for EX Series Switches*

Understanding CoS Flow Control (Ethernet PAUSE and PFC)

Flow control supports lossless transmission by regulating traffic flows to avoid dropping frames during periods of congestion. Flow control stops and resumes the transmission of network traffic between two connected peer nodes on a full-duplex Ethernet physical link. Controlling the flow by pausing and restarting it prevents buffers on the nodes from overflowing and dropping frames. You configure flow control on a per-interface basis.

Two methods of peer-to-peer flow control are supported:

- IEEE 802.3X Ethernet PAUSE

  NOTE: QFX10000 switches do not support Ethernet PAUSE. Information about Ethernet PAUSE does not apply to QFX10000 switches.

  OCX Series switches support symmetric Ethernet PAUSE flow control on Layer 3 tagged interfaces. OCX Series switches do not support asymmetric Ethernet PAUSE flow control. Information about asymmetric flow control does not apply to OCX Series switches.

- IEEE 802.1Qbb priority-based flow control (PFC)

  NOTE: OCX Series switches do not support PFC or lossless Layer 2 transport. Information about PFC, lossless transport, and congestion notification profiles do not apply to OCX Series switches.

Video: Why Use PFC in a Data Center Network?

- General Information about Ethernet PAUSE and PFC and When to Use Them on page 414
- Ethernet PAUSE on page 415
- PFC on page 420
- Lossless Transport Support Summary on page 423

General Information about Ethernet PAUSE and PFC and When to Use Them

Ethernet PAUSE and PFC are link-level flow control mechanisms.

NOTE: For end-to-end congestion control for best-effort traffic, see *Understanding CoS Explicit Congestion Notification*.

Ethernet PAUSE pauses transmission of all traffic on a physical Ethernet link.

Copyright © 2018, Juniper Networks, Inc.

PFC decouples the pause function from the physical Ethernet link and enables you to divide traffic on one link into eight priorities. You can think of the eight priorities as eight "lanes" of traffic that are mapped to forwarding classes and output queues. Each priority maps to a 3-bit IEEE 802.1p CoS code point value in the VLAN header. You can enable PFC on one or more priorities (IEEE 802.1p code points) on a link. When PFC-enabled traffic is paused on a link, traffic that is not PFC-enabled continues to flow (or is dropped if congestion is severe enough).

Use Ethernet PAUSE when you want to prevent packet loss on all of the traffic on a link. Use PFC to prevent traffic loss only on a specified type of traffic that require lossless treatment, for example, Fibre Channel over Ethernet (FCoE) traffic.

NOTE: **Depending on the amount of traffic on a link or assigned to a priority, pausing traffic can cause ingress port congestion and spread congestion through the network.**

Ethernet PAUSE and PFC are mutually exclusive configurations on an interface. Attempting to configure both Ethernet PAUSE and PFC on a link causes a commit error.

By default, all forms of flow control are disabled. You must explicitly enable flow control on interfaces to pause traffic.

Ethernet PAUSE

Ethernet PAUSE is a congestion relief feature that works by providing link-level flow control for all traffic on a full-duplex Ethernet link. Ethernet PAUSE works in both directions on the link. In one direction, an interface generates and sends Ethernet PAUSE messages to stop the connected peer from sending more traffic. In the other direction, the interface responds to Ethernet PAUSE messages it receives from the connected peer to stop sending traffic.

NOTE: **QFX10000 switches do not support Ethernet PAUSE. Information about Ethernet PAUSE does not apply to QFX10000 switches.**

OCX Series switches support symmetric Ethernet PAUSE flow control on Layer 3 tagged interfaces. OCX Series switches do not support asymmetric Ethernet PAUSE flow control. Information about asymmetric flow control does not apply to OCX Series switches.

Ethernet PAUSE also works on aggregated Ethernet interfaces. For example, if the connected peer interfaces are called Node A and Node B:

- When the receive buffers on interface Node A reach a certain level of fullness, the interface generates and sends an Ethernet PAUSE message to the connected peer (interface Node B) to tell the peer to stop sending frames. The Node B buffers store frames until the time period specified in the Ethernet PAUSE frame elapses; then Node B resumes sending frames to Node A.

- When interface Node A receives an Ethernet PAUSE message from interface Node B, interface Node A stops transmitting frames until the time period specified in the Ethernet PAUSE frame elapses; then Node A resumes transmission. (The Node A transmit buffers store frames until Node A resumes sending frames to Node B.)

  In this scenario, if Node B sends an Ethernet PAUSE frame with a time value of 0 to Node A, the 0 time value indicates to Node A that it can resume transmission. This happens when the Node B buffer empties to below a certain threshold and the buffer can once again accept traffic.

Symmetric flow control means an interface has the same Ethernet PAUSE configuration in both directions. The Ethernet PAUSE generation and Ethernet PAUSE response functions are both configured as enabled, or they are both disabled. You configure symmetric flow control by including the **flow-control** statement at the **[edit interfaces *interface-name* ether-options]** hierarchy level.

Asymmetric flow control allows you to configure the Ethernet PAUSE functionality in each direction independently on an interface. The configuration for generating Ethernet PAUSE messages and for responding to Ethernet PAUSE messages does not have to be the same. It can be enabled in both directions, disabled in both directions, or enabled in one direction and disabled in the other direction. You configure asymmetric flow control by including the **configured-flow-control** statement at the **[edit interfaces *interface-name* ether-options]** hierarchy level.

On any particular interface, symmetric and asymmetric flow control are mutually exclusive. Asymmetric flow control overrides and disables symmetric flow control. (If PFC is configured on an interface, you cannot commit an Ethernet PAUSE configuration on the interface. Attempting to commit an Ethernet PAUSE configuration on an interface with PFC enabled on one or more queues results in a commit error. To commit the PAUSE configuration, you must first delete the PFC configuration.) Both symmetric and asymmetric flow control are supported.

- Symmetric Flow Control on page 416
- Asymmetric Flow Control on page 416

Symmetric Flow Control

Symmetric flow control configures both the receive and transmit buffers in the same state. The interface can both send Ethernet PAUSE messages and respond to them (flow control is enabled), or the interface cannot send Ethernet PAUSE messages or respond to them (flow control is disabled).

When you enable symmetric flow control on an interface, the Ethernet PAUSE behavior depends on the configuration of the connected peer. With symmetric flow control enabled, the interface can perform any Ethernet PAUSE functions that the connected peer can perform. (When symmetric flow control is disabled, the interface does not send or respond to Ethernet PAUSE messages.)

Asymmetric Flow Control

Asymmetric flow control enables you to specify independently whether or not the interface receive buffer generates and sends Ethernet PAUSE messages to stop the connected

 Copyright © 2018, Juniper Networks, Inc.

peer from transmitting traffic, and whether or not the interface transmit buffer responds to Ethernet PAUSE messages it receives from the connected peer and stops transmitting traffic. The receive buffer configuration determines if the interface transmits Ethernet PAUSE messages, and the transmit buffer configuration determines if the interface receives and responds to Ethernet PAUSE messages:

- Receive buffers on—Enable Ethernet PAUSE transmission (generate and send Ethernet PAUSE frames)
- Transmit buffers on—Enable Ethernet PAUSE reception (respond to received Ethernet PAUSE frames)

You must explicitly set the flow control for both the receive buffer and the transmit buffer (**on** or **off**) to configure asymmetric Ethernet PAUSE. Table 88 on page 417 describes the configured flow control state when you set the receive (Rx) and transmit (Tx) buffers on an interface:

Table 88: Asymmetric Ethernet PAUSE Flow Control Configuration

Receive (Rx) Buffer	Transmit (Tx) Buffer	Configured Flow Control State
On	**Off**	Interface generates and sends Ethernet PAUSE messages. Interface does not respond to Ethernet PAUSE messages (interface continues to transmit even if peer requests that the interface stop sending traffic).
Off	**On**	Interface responds to Ethernet PAUSE messages received from the connected peer, but does not generate or send Ethernet PAUSE messages. (The interface does not request that the connected peer stop sending traffic.)
On	**On**	Same functionality as symmetric Ethernet PAUSE. Interface generates and sends Ethernet PAUSE messages and responds to received Ethernet PAUSE messages.
Off	**Off**	Ethernet PAUSE flow control is disabled.

The configured flow control is the Ethernet PAUSE state configured on the interface.

On 1-Gigabit Ethernet interfaces, autonegotiation of Ethernet PAUSE with the connected peer is supported. (Autonegotiation on 10-Gigabit Ethernet interfaces is not supported.) Autonegotiation enables the interface to exchange state advertisements with the connected peer so that the two devices can agree on the Ethernet PAUSE configuration. Each interface advertises its flow control state to the connected peer using a combination of the Ethernet PAUSE and ASM_DIR bits, as described in Table 89 on page 418:

Table 89: Flow Control State Advertised to the Connected Peer (Autonegotiation)

Rx Buffer State	Tx Buffer State	PAUSE Bit	ASM_DIR Bit	Description
Off	Off	0	0	The interface advertises no Ethernet PAUSE capability. This is equivalent to disabling flow control on an interface.
On	On	1	0	The interface advertises symmetric flow control (both the transmission of Ethernet PAUSE messages and the ability to receive and respond to Ethernet PAUSE messages).
On	Off	0	1	The interface advertises asymmetric flow control (the transmission of Ethernet PAUSE messages, but not the ability to receive and respond to Ethernet PAUSE messages).
Off	On	1	1	The interface advertises both symmetric and asymmetric flow control. Although the interface does not generate and send Ethernet PAUSE requests to the peer, the interface supports both symmetric and asymmetric Ethernet PAUSE configuration on the peer because the peer is not affected if the peer does not receive Ethernet PAUSE requests. (If the interface responds to the peer's Ethernet PAUSE requests, that is sufficient to support either symmetric or asymmetric flow control on the peer.)

The flow control configuration on each switch interface interacts with the flow control configuration of the connected peer. Each peer advertises its state to the other peer. The interaction of the flow control configuration of the peers determines the flow control behavior (resolution) between them, as shown in Table 90 on page 419. The first four

Copyright © 2018, Juniper Networks, Inc.

columns show the Ethernet PAUSE configuration on the local QFX Series or EX4600 switch and on the connected peer (also known as the *link partner*). The last two columns show the Ethernet PAUSE resolution that results from the local and peer configurations on each interface. This illustrates how the Ethernet PAUSE configuration of each interface affects the Ethernet PAUSE behavior on the other interface.

NOTE: In the Resolution columns of the table, disabling Ethernet PAUSE transmit means that the interface receive buffers do not generate and send Ethernet PAUSE messages to the peer. Disabling Ethernet PAUSE receive means that the interface transmit buffers do not respond to Ethernet PAUSE messages received from the peer.

Table 90: Asymmetric Ethernet PAUSE Behavior on Local and Peer Interfaces

Local Interface (QFX Series or EX4600 Switch)		Peer Interface			
PAUSE Bit	ASM_DIR Bit	PAUSE Bit	ASM_DIR Bit	Local Resolution	Peer Resolution
0	0	Don't care	Don't care	Disable Ethernet PAUSE transmit and receive	Disable Ethernet PAUSE transmit and receive
0	1	0	Don't care	Disable Ethernet PAUSE transmit and receive	Disable Ethernet PAUSE transmit and receive
0	1	1	0	Disable Ethernet PAUSE transmit and receive	Disable Ethernet PAUSE transmit and receive
0	1	1	1	Enable Ethernet PAUSE transmit and disable Ethernet PAUSE receive	Disable Ethernet PAUSE transmit and enable Ethernet PAUSE receive
1	0	0	Don't care	Disable Ethernet PAUSE transmit and receive	Disable Ethernet PAUSE transmit and receive
1	0	1	Don't care	Enable Ethernet PAUSE transmit and receive	Enable Ethernet PAUSE transmit and receive
1	1	0	0	Disable Ethernet PAUSE transmit and receive	Disable Ethernet PAUSE transmit and receive
1	1	0	1	Enable Ethernet PAUSE receive and disable Ethernet PAUSE transmit	Enable Ethernet PAUSE transmit and disable Ethernet PAUSE receive
1	1	Don't care	Don't care	Enable Ethernet PAUSE transmit and receive	Enable Ethernet PAUSE transmit and receive

Copyright © 2018, Juniper Networks, Inc.

NOTE: For your convenience, Table 90 on page 419 replicates Table 28B-3 of Section 2 of the IEEE 802.X specification.

PFC

PFC is a lossless transport and congestion relief feature that works by providing granular link-level flow control for each IEEE 802.1p code point (priority) on a full-duplex Ethernet link. When the receive buffer on a switch interface fills to a threshold, the switch transmits a pause frame to the sender (the connected peer) to temporarily stop the sender from transmitting more frames. The buffer threshold must be low enough so that the sender has time to stop transmitting frames and the receiver can accept the frames already on the wire before the buffer overflows. The switch automatically sets queue buffer thresholds to prevent frame loss.

When congestion forces one priority on a link to pause, all of the other priorities on the link continue to send frames. Only frames of the paused priority are not transmitted. When the receive buffer empties below another threshold, the switch sends a message that starts the flow again.

You configure PFC using a congestion notification profile (CNP). A CNP has two parts:

- Input—Specify the code point (or code points) on which to enable PFC, and optionally specify the maximum receive unit (MRU) and the cable length between the interface and the connected peer interface.
- Output—Specify the output queue or output queues that respond to pause messages from the connected peer.

You apply a PFC configuration by configuring a CNP on one or more interfaces. Each interface that uses a particular CNP is enabled to pause traffic identified by the priorities (code points) specified in that CNP. You can configure one CNP on an interface, and you can configure different CNPs on different interfaces. When you configure a CNP on an interface, ingress traffic that is mapped to a priority that the CNP enables for PFC is paused whenever the queue buffer fills to the pause threshold. (The pause threshold is not user-configurable.)

Configure PFC for a priority end to end along the entire data path to create a lossless lane of traffic on the network. You can selectively pause the traffic in any queue without pausing the traffic for other queues on the same link. You can create lossless lanes for traffic such as FCoE, LAN backup, or management, while using standard frame-drop congestion management for IP traffic on the same link.

Potential consequences of flow control are:

- Ingress port congestion (configuring too many lossless flows can cause ingress port congestion)
- A paused priority that causes upstream devices to pause the same priority, thus spreading congestion back through the network

 Copyright © 2018, Juniper Networks, Inc.

By definition, PFC supports symmetric pause only (as opposed to Ethernet PAUSE, which supports symmetric and asymmetric pause). With symmetric pause, a device can:

- Transmit pause frames to pause incoming traffic. (You configure this using the input stanza of a congestion notification profile.)
- Receive pause frames and stop sending traffic to a device whose buffer is too full to accept more frames. (You configure this using the output stanza of a congestion notification profile.)

Receiving a PFC frame from a connected peer pauses traffic on egress queues based on the IEEE 802.1p priorities that the PFC pause frame identifies. The priorities are 0 through 7. By default, the priorities map to queue numbers 0 through 7, respectively, and to specific forwarding classes, as shown in Table 91 on page 421:

Table 91: Default PFC Priority to Queue and Forwarding Class Mapping

IEEE 802.1p Priority (Code Point)	Queue	Forwarding Class
0 (000)	0	best-effort
1 (001)	1	best-effort
2 (010)	2	best-effort
3 (011)	3	fcoe
4 (100)	4	no-loss
5 (101)	5	best-effort
6 (110)	6	network-control
7 (111)	7	network-control

For example, a received PFC pause frame that pauses priority 3 pauses output queue 3. If you do not want to use the default configuration, you can configure customized mapping of priorities to queues and forwarding classes.

Copyright © 2018, Juniper Networks, Inc.

NOTE: By convention, deployments with converged server access typically use IEEE 802.1p priority 3 for FCoE traffic. The default configuration sets the **fcoe** forwarding class as a lossless forwarding class that is mapped to queue 3. The default classifier maps incoming priority 3 traffic to the **fcoe** forwarding class. *However, you must apply PFC to the entire FCoE data path to configure the end-to-end lossless behavior that FCoE traffic requires.*

If your network uses priority 3 for FCoE traffic, we recommend that you use the default configuration. If your network uses a priority other than 3 for FCoE traffic, you can configure lossless FCoE transport on any IEEE 80.21p priority as described in "Understanding CoS IEEE 802.1p Priorities for Lossless Traffic Flows" on page 446 and "Understanding CoS IEEE 802.1p Priority Remapping on an FCoE-FC Gateway" on page 519.

To enable PFC on a priority:

1. Specify the IEEE 802.1p code point to pause in the input stanza of a CNP.
2. If you are not using the default lossless forwarding classes, specify the IEEE 802.1p code point to pause and the corresponding output queue in the output stanza of the CNP.
3. Apply the CNP to the ingress interfaces on which you want to pause the traffic.
4. If you are not using the default lossless forwarding classes, apply the CNP to the ingress interfaces on which you want to pause the traffic.

CAUTION: Any change to the PFC configuration on a port temporarily blocks the entire port (not just the priorities affected by the PFC change) so that the port can implement the change, then unblocks the port. Blocking the port stops ingress and egress traffic, and causes packet loss on all queues on the port until the port is unblocked.

A change to the PFC configuration means any change to a CNP, including changing the input portion of the CNP (enabling or disabling PFC on a priority, or changing the MRU or cable-length values) or changing the output portion of the CNP that enables or disables output flow control on a queue. A PFC configuration change only affects ports that use the changed CNP.

The following actions change the PFC configuration:

- Deleting or disabling a PFC configuration (input or output) in a CNP that is in use on one or more interfaces. For example:
  1. An existing CNP with an input stanza that enables PFC on priorities 3, 5, and 6 is configured on interfaces xe-0/0/20 and xe-0/0/21.
  2. We disable the PFC configuration for priority 6 in the input CNP, and then commit the configuration.

 Copyright © 2018, Juniper Networks, Inc.

3. The PFC configuration change causes all traffic on interfaces xe-0/0/20 and xe-0/0/21 to stop until the PFC change has been implemented. When the PFC change has been implemented, traffic resumes.

- Configuring a CNP on an interface. (This changes the PFC state by enabling PFC on one or more priorities.)
- Deleting a CNP from an interface. (This changes the PFC state by disabling PFC on one or more priorities.)

When you associate the CNP with an interface, the interface uses PFC to send pause requests when the output queue buffer for the lossless traffic fills to the pause threshold.

On switches that use different classifiers for unicast and multidestination traffic, you can map a unicast queue (queue 0 through 7) and a multidestination queue (queue 8, 9, 10, or 11) to the same IEEE 802.1p code point (priority) so that both unicast and multicast traffic use that priority. However, do not map multidestination traffic to lossless output queues. Starting with Junos OS Release 12.3, you can map one priority to multiple output queues.

NOTE: You can attach a maximum of one CNP to an interface, but you can create an unlimited number of CNPs that explicitly configure only the input stanza and use the default output stanza.

The output stanza of the CNP maps to a profile that interfaces use to respond to pause messages received from the connected peer. On standalone switches, you can create two CNPs with an explicitly configured output stanza.

When a switch is a Node device in a QFabric system, you can create one CNP with an explicitly configured output stanza. (One fewer profile is available on QFabric systems because the system needs a default profile for fabric interfaces, which are not used as fabric interfaces when the switches are not part of a QFabric system. "Understanding CoS IEEE 802.1p Priorities for Lossless Traffic Flows" on page 446 describes configuring output flow control.

Lossless Transport Support Summary

The switch supports up to six lossless forwarding classes. For lossless transport, you must enable PFC on the IEEE 802.1p priorities (code points) mapped to lossless forwarding classes.

CAUTION: Any change to the PFC configuration on a port temporarily blocks the entire port (not just the priorities affected by the PFC change) so that the port can implement the change, then unblocks the port. Blocking the port stops ingress and egress traffic, and causes packet loss on all queues on the port until the port is unblocked.

The following limitation applies to support lossless transport on QFabric systems only:

- The internal fiber cable length from the QFabric system Node device to the QFabric system Interconnect device cannot exceed 150 meters.

The default CoS configuration provides two lossless forwarding classes, *fcoe* and *no-loss*. If you explicitly configure lossless forwarding classes, you must include the **no-loss** packet drop attribute to enable lossless behavior, or the traffic is not lossless. For both default and explicit lossless forwarding class configuration, you must configure CNP input stanzas to enable PFC on the priority of the lossless traffic and apply the CNPs to ingress interfaces.

NOTE: The information in this note applies only to systems that do not run the ELS CLI.

Junos OS Release 12.2 introduced changes to the way the switch handles lossless forwarding classes (including the default **fcoe** and **no-loss** forwarding classes).

In Junos OS Release 12.1, either explicitly configuring the **fcoe** and **no-loss** forwarding classes or using the default configuration for these forwarding classes resulted in the same lossless behavior for traffic mapped to those forwarding classes.

However, in Junos OS Release 12.2, if you explicitly configure the **fcoe** or the **no-loss** forwarding class, that forwarding class is no longer treated as a lossless forwarding class. Traffic mapped to these forwarding classes is treated as lossy (best-effort) traffic. This is true even if the explicit configuration is exactly the same as the default configuration.

If your CoS configuration from Junos OS Release 12.1 or earlier includes the explicit configuration of the **fcoe** or the **no-loss** forwarding class, then when you upgrade to Junos OS Release 12.2, those forwarding classes are not lossless. To preserve the lossless treatment of these forwarding classes, delete the the explicit **fcoe** and **no-loss** forwarding class configuration before you upgrade to Junos OS Release 12.2.

See "Overview of CoS Changes Introduced in Junos OS Release 12.2" on page 54 for detailed information about this change and how to delete an existing lossless configuration.

In Junos OS Release 12.3, the default behavior of the **fcoe** and **no-loss** forwarding classes is the same as in Junos OS Release 12.2. However, in Junos OS Release 12.3, you can configure up to six lossless forwarding classes. All explicitly configured lossless forwarding classes must include the new **no-loss** packet drop attribute or the forwarding class is lossy.

"Understanding CoS IEEE 802.1p Priorities for Lossless Traffic Flows" on page 446 provides detailed information about the explicit configuration of lossless priorities and about the

 Copyright © 2018, Juniper Networks, Inc.

default configuration of lossless priorities, including the input and output stanzas of the CNP.

NOTE: PFC and Ethernet PAUSE are used only on Ethernet interfaces. Fabric (fte) ports on QFabric systems (Node device fabric ports and Interconnect device fabric ports) use link-layer flow control (LLFC) to ensure the appropriate treatment of lossless traffic.

Release History Table

Release	Description
12.3	Starting with Junos OS Release 12.3, you can map one priority to multiple output queues.

Related Documentation

- Understanding DCB Features and Requirements on page 376
- *Understanding CoS Explicit Congestion Notification*
- Configuring CoS PFC (Congestion Notification Profiles) on page 429
- Example: Configuring CoS PFC for FCoE Traffic on page 432

Enabling and Disabling CoS Symmetric Ethernet PAUSE Flow Control

Ethernet PAUSE flow control is a congestion relief feature that works by providing link-level flow control for all traffic on a full-duplex Ethernet link, including Ethernet links that belong to Ethernet link aggregated (LAG) interfaces. Ethernet PAUSE works in both directions on the link. In one direction, an interface generates and sends PAUSE messages to stop the connected peer from sending more traffic. In the other direction, the interface responds to PAUSE messages it receives from the connected peer to stop sending traffic.

Symmetric flow control means that an interface has the same PAUSE configuration in both directions. The PAUSE generation and PAUSE response functions are both configured as enabled, or they are both disabled.

Asymmetric flow control allows you to configure the PAUSE functionality in each direction independently on an interface. The configuration for generating PAUSE messages and for responding to PAUSE messages does not have to be the same. It can be enabled in both directions, disabled in both directions, or enabled in one direction and disabled in the other direction. If you do not want to PAUSE all of the traffic on a link, you can use priority-based flow control (PFC) to selectively pause traffic based on its IEEE 802.1p code point.

NOTE: **OCX Series switches do not support PFC.**

On any particular interface, symmetric and asymmetric flow control are mutually exclusive. If you attempt to configure both features, the switch returns a commit error. Ethernet PAUSE and PFC are also mutually exclusive features, so you cannot configure both of them on the same interface. If you attempt to configure both Ethernet PAUSE and PFC on an interface, the switch returns a commit error.

By default, all flow control features are disabled. You enable symmetric flow control on the interfaces on which you want to PAUSE all of the traffic on a link.

- To enable symmetric flow control on an interface:

```
[edit interfaces interface-name ether-options]
user@switch# set flow-control
```

- To disable symmetric flow control on an interface:

```
[edit interfaces interface-name ether-options]
user@switch# set no-flow-control
```

Related Documentation

- Configuring CoS Asymmetric Ethernet PAUSE Flow Control on page 427
- Configuring CoS PFC (Congestion Notification Profiles) on page 429
- Understanding CoS Flow Control (Ethernet PAUSE and PFC) on page 414

Copyright © 2018, Juniper Networks, Inc.

Configuring CoS Asymmetric Ethernet PAUSE Flow Control

Ethernet PAUSE flow control is a congestion relief feature that works by providing link-level flow control for all traffic on a full-duplex Ethernet link, including Ethernet links that belong to link aggregated (LAG) interfaces. Ethernet PAUSE works in both directions on the link. In one direction, an interface generates and sends PAUSE messages to stop the connected peer from sending more traffic. In the other direction, the interface responds to PAUSE messages it receives from the connected peer to stop sending traffic.

Asymmetric flow control allows you to configure the PAUSE functionality in each direction independently on an interface. The configuration for generating PAUSE messages and for responding to PAUSE messages does not have to be the same. It can be enabled in both directions, disabled in both directions, or enabled in one direction and disabled in the other direction.

Symmetric flow control means that the interface has the same configuration in both directions. The PAUSE generation and PAUSE response functions are both configured as enabled or they are both disabled. If you do not want to PAUSE all of the traffic on a link, you can use priority-based flow control (PFC) to selectively pause traffic based on its IEEE 802.1p code point.

Asymmetric flow control provides the ability to configure the receive buffer and transmit buffer Ethernet PAUSE actions independently on an interface. The buffers perform the following actions:

- The receive buffers generate and send PAUSE messages to the connected peer to ask the peer to stop sending traffic for a time period specified in the PAUSE frame. The peer interface's buffers may store outgoing frames until the PAUSE period elapses and the interface can resume sending traffic.
- The transmit buffers respond to PAUSE messages received from the connected peer to stop sending traffic to the peer. The transmit buffer may store outgoing frames until the PAUSE period elapses and the interface can resume sending traffic.

Asymmetric flow control enables you to specify independently whether or not the interface receive buffer generates and sends PAUSE messages to stop the connected peer from transmitting traffic, and whether or not the interface transmit buffer responds to PAUSE messages it receives from the connected peer and stops transmitting traffic. The receive buffer configuration determines if the interface transmits PAUSE messages, and the transmit buffer configuration determines if the interface receives and responds to PAUSE messages:

- Receive buffers on—Enable PAUSE transmission (generate and send PAUSE frames)
- Transmit buffers on—Enable PAUSE reception (respond to received PAUSE frames)

You must explicitly set both the receive buffer and the transmit buffer to configure asymmetric flow control.

- To configure asymmetric flow control on an interface:

```
[edit interfaces interface-name ether-options]
user@switch# set configured-flow-control rx-buffers (on | off) tx-buffers (on | off)
```

For example, to configure interface **xe-0/0/24** to generate and send PAUSE messages but not to respond to received PAUSE messages:

```
set interfaces xe-0/0/24 ether-options configured-flow-control rx-buffers on tx-buffers off
```

For example, to configure interface **xe-0/0/30** to respond to received PAUSE messages but not to generate and send PAUSE messages:

```
set interfaces xe-0/0/30 ether-options configured-flow-control rx-buffers off tx-buffers on
```

NOTE: If you configure both buffers to be on, that is equivalent to symmetric flow control. If you configure both buffers to be off, there is no flow control (flow control is disabled).

Related Documentation

- Enabling and Disabling CoS Symmetric Ethernet PAUSE Flow Control on page 426
- Configuring CoS PFC (Congestion Notification Profiles) on page 429
- Understanding CoS Flow Control (Ethernet PAUSE and PFC) on page 414

Copyright © 2018, Juniper Networks, Inc.

Configuring CoS PFC (Congestion Notification Profiles)

A congestion notification profile (CNP) enables priority-based flow control (PFC) on specified IEEE 802.1p priorities (code points). A CNP has two components:

- Input CNP:
  - Enable PFC on a specified priority.
  - Configure the maximum receive unit (MRU) on an interface for traffic that matches the PFC priority (optional).
  - Specify the length of the attached cable on the ingress interface (optional)
- Output CNP (optional): Configure flow control to enable PFC pause on specific output queues for specified priorities.

NOTE: By default, output queues 3 and 4 (which are mapped to default lossless forwarding classes **fcoe** and **no-loss**, respectively) are configured to respond to PFC pause messages received from the connected peer on priorities 3 and 4 (code points 011 and 100, respectively). If you explicitly configure flow control on any output queue, you must configure flow control on every output queue that you want to respond to pause messages. (The explicit configuration overrides the default configuration.)

To achieve lossless behavior, the output queue priorities on which you enable PFC flow control must match the PFC priorities on which you enable PFC on the input interfaces. For example, if you program output queues to pause priorities 3 (011) and 5 (101) in the output component of the CNP, then you must also enable pause on priorities 3 and 5 on the input component of the CNP. (In addition, the forwarding classes mapped to the paused output queues must be lossless forwarding classes.)

Associating a CNP with an interface enables PFC on the ingress traffic that matches the priority specified in the input CNP, and programs the queues listed in the output CNP to pause when the interface receives a PFC pause message from the connected peer. Configure PFC on a priority end to end along the entire data path to create a lossless lane of traffic on the network.

Copyright © 2018, Juniper Networks, Inc.

NOTE: You must enable PFC on the priority used by FCoE traffic on ingress interfaces (input CNP). Enable PFC on the FCoE priority on every interface that carries FCoE traffic. By convention, FCoE traffic uses priority 3 (code point 011), which maps to queue 3. If your network uses priority 3 for FCoE traffic, the default forwarding class and classifier configuration support lossless transport, but you must still configure a CNP and apply it to the correct ingress interfaces to enable PFC and achieve lossless transport.

If your network does not use priority 3 for FCoE traffic, you need to configure a classifier that classifies FCoE traffic into a lossless forwarding class, based on the priority your network uses for FCoE traffic. If you are not using the default lossless forwarding class configuration, then you also need to ensure that the output queue mapped to the lossless FCoE forwarding class is programmed to pause.

You can attach only one CNP to an interface. There is no limit to the total number of CNPs you can create.

Configuring a CNP consists of:

- Naming the CNP.
- Specifying the IEEE 802.1 code point (priority) on which you want to enable PFC on ingress interfaces (input CNP).
- Optionally, specifying the MRU and the length of the attached cable on ingress interfaces (input CNP).
- Optionally, configuring flow control (PFC pause) on specified output queues if you want queues other than queues 3 and 4 to respond to pause messages received from the connected peer (output CNP).
- Mapping the CNP to an interface.

NOTE: Configuring or changing PFC on an interface blocks the entire port until the PFC change is completed. After a PFC change is completed, the port is unblocked and traffic resumes. Blocking the port stops ingress and egress traffic, and causes packet loss on all queues on the port until the port is unblocked.

NOTE: On QFX5100, QFX5200, and QFX5210, once the headroom buffer is exhausted, any new CNP configuration is not allocated headroom buffer, even if headroom buffer is freed by deletion of an existing CNP. CNP configuration has to be applied again to re-allocate the headroom buffer.

Copyright © 2018, Juniper Networks, Inc.

1. Enable PFC on the desired priority in the input CNP and optionally configure the interface MRU for traffic on that priority:

   ```
   [edit class-of-service]
   user@switch# set congestion-notification-profile cnp-name input ieee-802.1 code-point
   code-point bits pfc mru mru-value
   ```

   For example, to configure a CNP named **fcoe-cnp** that enables PFC on IEEE 802.1 code point **011** and configures an MRU value of **2240**:

   ```
   [edit class-of-service]
   user@switch# set congestion-notification-profile fcoe-cnp input ieee-802.1 code-point 011
   pfc mru 2240
   ```

2. (Optional) Configure the length of the cable attached to the ingress interface:

   ```
   [edit class-of-service]
   user@switch# set congestion-notification-profile cnp-name input cable-length
   cable-length-value
   ```

   For example, to configure a CNP named **fcoe-cnp** that sets the length of the ingress interface cable to **100** meters:

   ```
   [edit class-of-service]
   user@switch# set congestion-notification-profile fcoe-cnp input cable-length 100
   ```

3. (Optional) Configure flow control on output queues:

   ```
   [edit class-of-service]
   user@switch# set congestion-notification-profile cnp-name output ieee-802.1 code-point
   code-point-bits flow-control-queue [queue | list-of-queues]
   ```

   For example, to configure a CNP named **fcoe-cnp** that enables PFC pause flow control on output queues 3 and 5 for FCoE traffic that uses priority 3 (code point **011**) and on output queue 4 for traffic that uses priority 4 (code point **100**):

   ```
   [edit class-of-service]
   user@switch# set congestion-notification-profile cnp-name output ieee-802.1 code-point
   011 flow-control-queue [3 5]
   user@switch# set congestion-notification-profile cnp-name output ieee-802.1 code-point
   100 flow-control-queue 4
   ```

4. Map the CNP to an interface:

   ```
   [edit class-of-service]
   user@switch# set interfaces interface congestion-notification-profile cnp-name
   ```

   For example, to map the CNP **fcoe-cnp** to the interface **xe-0/0/7**:

   ```
   [edit class-of-service]
   user@switch# set interfaces xe-0/0/7 congestion-notification-profile fcoe-cnp
   ```

Related Documentation

- Example: Configuring CoS PFC for FCoE Traffic on page 432

- Assigning CoS Components to Interfaces on page 23
- Monitoring Interfaces That Have CoS Components on page 763
- Understanding CoS Flow Control (Ethernet PAUSE and PFC) on page 414
- Understanding CoS IEEE 802.1p Priorities for Lossless Traffic Flows on page 446

Example: Configuring CoS PFC for FCoE Traffic

Priority-based flow control (PFC, described in IEEE 802.1Qbb) is a link-level flow control mechanism that you apply at ingress interfaces. PFC enables you to divide traffic on one physical link into eight priorities. You can think of the eight priorities as eight “lanes” of traffic that correspond to queues (forwarding classes). Each priority is mapped to a 3-bit IEEE 802.1p CoS value in the VLAN header.

You can selectively apply PFC to the traffic in any queue without pausing the traffic in other queues on the same link. You must apply PFC to FCoE traffic to ensure lossless transport.

This example describes how to configure PFC for FCoE traffic:

- Requirements on page 432
- Overview on page 432
- Configuration on page 434
- Verification on page 440

Requirements

This example uses the following hardware and software components:

- One switch
- Junos OS Release 11.1 or later for the QFX Series

Overview

FCoE traffic requires PFC to ensure lossless packet transport. This example shows you how to configure PFC on FCoE traffic, use the default FCoE forwarding-class-to-queue mapping and:

- Configure a classifier that associates the FCoE forwarding class with FCoE traffic, which is identified by IEEE 802.1p code point 011 (priority 3).
- Configure a congestion notification profile to apply PFC to the FCoE traffic.
- Apply the classifier and the PFC configuration to ingress interfaces.

 Copyright © 2018, Juniper Networks, Inc.

NOTE: Configuring or changing PFC on an interface blocks the entire port until the PFC change is completed. After a PFC change is completed, the port is unblocked and traffic resumes. Blocking the port stops ingress and egress traffic, and causes packet loss on all queues on the port until the port is unblocked.

- Configure the CoS bandwidth scheduling for the FCoE forwarding class output queue.
- On switches that support enhanced transmission selection (ETS) hierarchical port scheduling, create a forwarding class set (priority group) that includes the FCoE forwarding class; this is required to configure enhanced transmission selection (ETS) and support data center bridging (DCB).
- For ETS, configure the bandwidth scheduling for the FCoE priority group.
- Apply the configuration to ingress and egress interfaces. How this is done differs depending on whether you use ETS or direct port scheduling for the CoS configuration.

  For direct port scheduling, you apply a scheduler map directly to the interface. A scheduler map maps schedulers to forwarding classes, and applies the CoS properties of the scheduler to the output queue mapped to the forwarding class.

  For ETS hierarchical port scheduling, you apply the scheduler map to a traffic control profile, and then apply the traffic control profile to the interface. The scheduler map maps CoS properties to forwarding classes (and their associated output queues) just as it does for direct port scheduling. The traffic control profile maps CoS properties to the priority group (a group of forwarding classes defined in a forwarding class set) that contains the forwarding class, creating a CoS hierarchy that allocates port bandwidth to a group of forwarding classes (priority group), and then allocates the priority group bandwidth to the individual forwarding classes.

Each interface in this example acts as both an ingress interface and an egress interface, so the classifier, congestion notification profile, and scheduling are applied to all of the interfaces.

Topology

Table 92 on page 433 shows the configuration components for this example.

Table 92: Components of the PFC for FCoE Traffic Configuration Topology

Component	Settings
Hardware	One switch
Behavior aggregate classifier (maps the FCoE forwarding class to incoming packets by IEEE 802.1 code point)	Code point **011** to forwarding class **fcoe** and loss priority **low** Ingress interfaces: **xe-0/0/31**, **xe-0/0/32**, **xe-0/0/33**, **xe-0/0/34**
PFC congestion notification profile	**fcoe-cnp**: Code point **011** Ingress interfaces: **xe-0/0/31**, **xe-0/0/32**, **xe-0/0/33**, **xe-0/0/34**

Table 92: Components of the PFC for FCoE Traffic Configuration Topology (continued)

Component	Settings
FCoE queue scheduler	**fcoe-sched**: Minimum bandwidth **3g** Maximum bandwidth **100%** Priority **low**
Forwarding class-to-scheduler mapping	Scheduler map **fcoe-map**: Forwarding class **fcoe** Scheduler **fcoe-sched** On switches that support direct port scheduling, if you use port scheduling, attach the scheduler map directly to interfaces **xe-0/0/31**, **xe-0/0/32**, **xe-0/0/33**, and **xe-0/0/34**.
ETS only: Forwarding class set (FCoE priority group)	**fcoe-pg**: Forwarding class **fcoe** Egress interfaces: **xe-0/0/31**, **xe-0/0/32**, **xe-0/0/33**, **xe-0/0/34**
ETS only: Traffic control profile	**fcoe-tcp**: Scheduler map **fcoe-map** Minimum bandwidth **3g** Maximum bandwidth **100%** For ETS hierarchical scheduling, attach the traffic control profile (using the **output-traffic-control-profile** keyword) to interfaces **xe-0/0/31**, **xe-0/0/32**, **xe-0/0/33**, and **xe-0/0/34**.

Figure 22 on page 434 shows a block diagram of the configuration components and the configuration flow of the CLI statements used in the example.

Figure 22: PFC for FCoE Traffic Configuration Components Block Diagram

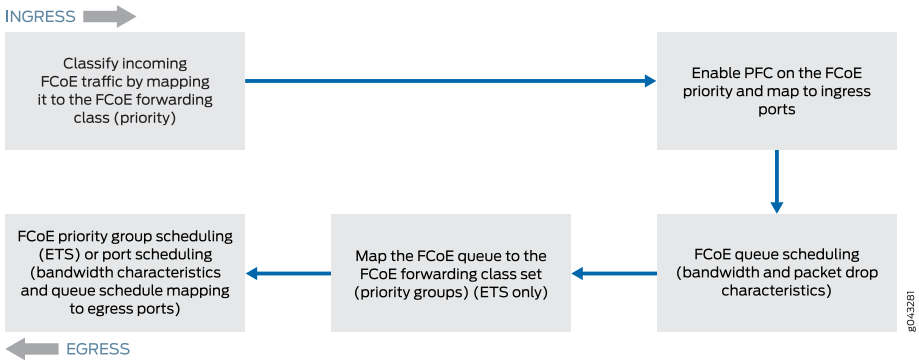

Configuration

CLI Quick Configuration

To quickly configure PFC for FCoE traffic, copy the following commands, paste them in a text file, remove line breaks, change variables and details to match your network configuration, and then copy and paste the commands into the CLI at the [edit] hierarchy level. The configuration is separated into the configuration common to ETS and direct

Copyright © 2018, Juniper Networks, Inc.

port scheduling, and the portions of the configuration that apply only to ETS and only to port scheduling.

Common Configuration (Applies to ETS Hierarchical Scheduling and to Port Scheduling

```
[edit class-of-service]
set classifiers ieee-802.1 fcoe-classifier forwarding-class fcoe loss-priority low code-points 011
set congestion-notification-profile fcoe-cnp input ieee-802.1 code-point 011 pfc
set interfaces xe-0/0/31 unit 0 classifiers ieee-802.1 fcoe-classifier
set interfaces xe-0/0/32 unit 0 classifiers ieee-802.1 fcoe-classifier
set interfaces xe-0/0/33 unit 0 classifiers ieee-802.1 fcoe-classifier
set interfaces xe-0/0/34 unit 0 classifiers ieee-802.1 fcoe-classifier
set interfaces xe-0/0/31 congestion-notification-profile fcoe-cnp
set interfaces xe-0/0/32 congestion-notification-profile fcoe-cnp
set interfaces xe-0/0/33 congestion-notification-profile fcoe-cnp
set interfaces xe-0/0/34 congestion-notification-profile fcoe-cnp
set schedulers fcoe-sched priority low transmit-rate 3g
set schedulers fcoe-sched shaping-rate percent 100
set scheduler-maps fcoe-map forwarding-class fcoe scheduler fcoe-sched
```

Configuration for ETS Hierarchical Scheduling

The ETS-specific portion of this example configures forwarding class set (priority group) membership, priority group CoS settings (traffic control profile), and assigns the priority group and its CoS configuration to the interfaces.

```
[edit class-of-service]
set forwarding-class-sets fcoe-pg class fcoe
set traffic-control-profiles fcoe-tcp scheduler-map fcoe-map guaranteed-rate 3g
set traffic-control-profiles fcoe-tcp shaping-rate percent 100
set interfaces xe-0/0/31 forwarding-class-set fcoe-pg output-traffic-control-profile fcoe-tcp
set interfaces xe-0/0/32 forwarding-class-set fcoe-pg output-traffic-control-profile fcoe-tcp
set interfaces xe-0/0/33 forwarding-class-set fcoe-pg output-traffic-control-profile fcoe-tcp
set interfaces xe-0/0/34 forwarding-class-set fcoe-pg output-traffic-control-profile fcoe-tcp
```

Configuration for Port Scheduling

The port-scheduling-specific portion of this example assigns the scheduler map (which sets the CoS treatment of the forwarding classes in the scheduler map) to the interfaces.

```
[edit class-of-service]
set interfaces xe-0/0/31 scheduler-map fcoe-map
set interfaces xe-0/0/32 scheduler-map fcoe-map
set interfaces xe-0/0/33 scheduler-map fcoe-map
set interfaces xe-0/0/34 scheduler-map fcoe-map
```

Common Configuration (Applies to ETS Hierarchical Scheduling and to Port Scheduling)

Step-by-Step Procedure

To configure the ingress classifier for FCoE traffic, PFC on the FCoE traffic, apply the PFC and classifier configurations to interfaces, and configure queue scheduling, for both ETS hierarchical scheduling and port scheduling (common configuration):

1. Configure a classifier to set the loss priority and IEEE 802.1 code point assigned to the FCoE forwarding class at the ingress:

```
[edit class-of-service]
user@switch# set classifiers ieee-802.1 fcoe-classifier forwarding-class fcoe loss-priority
low code-points 011
```

2. Configure PFC on the FCoE queue by applying FCoE to the IEEE 802.1 code point **011**:

```
[edit class-of-service]
user@switch# set congestion-notification-profile fcoe-cnp input ieee-802.1 code-point
011 pfc
```

3. Apply the PFC configuration to the ingress interfaces:

```
[edit class-of-service]
user@switch# set interfaces xe-0/0/31 congestion-notification-profile fcoe-cnp
user@switch# set interfaces xe-0/0/32 congestion-notification-profile fcoe-cnp
user@switch# set interfaces xe-0/0/33 congestion-notification-profile fcoe-cnp
user@switch# set interfaces xe-0/0/34 congestion-notification-profile fcoe-cnp
```

4. Assign the classifier to the ingress interfaces:

```
[edit class-of-service]
user@switch# set interfaces xe-0/0/31 unit 0 classifiers ieee-802.1 fcoe-classifier
user@switch# set interfaces xe-0/0/32 unit 0 classifiers ieee-802.1 fcoe-classifier
user@switch# set interfaces xe-0/0/33 unit 0 classifiers ieee-802.1 fcoe-classifier
user@switch# set interfaces xe-0/0/34 unit 0 classifiers ieee-802.1 fcoe-classifier
```

5. Configure output scheduling for the FCoE queue:

```
[edit class-of-service]
user@switch# set schedulers fcoe-sched priority low transmit-rate 3g
user@switch# set schedulers fcoe-sched shaping-rate percent 100
```

6. Map the FCoE forwarding class to the FCoE scheduler:

```
[edit class-of-service]
user@switch# set scheduler-maps fcoe-map forwarding-class fcoe scheduler fcoe-sched
```


Copyright © 2018, Juniper Networks, Inc.

ETS Hierarchical Scheduling Configuration

Step-by-Step Procedure

To configure the forwarding class set (priority group) and priority group scheduling (in a traffic control profile), and apply the ETS hierarchical scheduling for FCoE traffic to interfaces:

1. Configure the forwarding class set for the FCoE traffic:

```
[edit class-of-service]
user@switch# set forwarding-class-sets fcoe-pg class fcoe
```

2. Define the traffic control profile for the FCoE forwarding class set:

```
[edit class-of-service]
user@switch# set traffic-control-profiles fcoe-tcp scheduler-map fcoe-map
guaranteed-rate 3g
user@switch# set traffic-control-profiles fcoe-tcp shaping-rate percent 100
```

3. Apply the FCoE forwarding class set and traffic control profile to the egress ports:

```
[edit class-of-service]
user@switch# set interfaces xe-0/0/31 forwarding-class-set fcoe-pg
output-traffic-control-profile fcoe-tcp
user@switch# set interfaces xe-0/0/32 forwarding-class-set fcoe-pg
output-traffic-control-profile fcoe-tcp
user@switch# set interfaces xe-0/0/33 forwarding-class-set fcoe-pg
output-traffic-control-profile fcoe-tcp
user@switch# set interfaces xe-0/0/34 forwarding-class-set fcoe-pg
output-traffic-control-profile fcoe-tcp
```

Port Scheduling Configuration

Step-by-Step Procedure

To apply port scheduling for FCoE traffic to interfaces:

1. Apply the scheduler map to the egress ports:

```
[edit class-of-service]
user@switch# set interfaces xe-0/0/31 scheduler-map fcoe-map
user@switch# set interfaces xe-0/0/32 scheduler-map fcoe-map
user@switch# set interfaces xe-0/0/33 scheduler-map fcoe-map
user@switch# set interfaces xe-0/0/34 scheduler-map fcoe-map
```

Results

Display the results of the configuration (the system shows only the explicitly configured parameters; it does not show default parameters such as the **fcoe** lossless forwarding class). The results are from the ETS hierarchical scheduling configuration to show the more complex configuration. Direct port scheduling results would not show the traffic control profile or forwarding class set portions of the configuration, and would display

the name of the scheduler map under each interface (instead of the names of the forwarding class set and output traffic control profile), but is otherwise the same.

```
user@switch> show configuration class-of-service
classifiers {
   ieee-802.1 fcoe-classifier {
      forwarding-class fcoe {
         loss-priority low code-points 011;
      }
   }
   traffic-control-profiles {
      fcoe-tcp {
         scheduler-map fcoe-map;
         shaping-rate percent 100;
         guaranteed-rate 3000000000;
      }
   }
   forwarding-class-sets {
      fcoe-pg {
         class fcoe;
      }
   }
   congestion-notification-profile {
      fcoe-cnp {
         input {
            ieee-802.1 {
               code-point 011 {
                  pfc;
               }
            }
         }
      }
   }
   interfaces {
      xe-0/0/31 {
         congestion-notification-profile fcoe-cnp;
         forwarding-class-set {
            fcoe-pg {
               output-traffic-control-profile fcoe-tcp;
            }
         }
         unit 0 {
            classifiers {
               ieee-802.1 fcoe-classifier;
            }
         }
      }
      xe-0/0/32 {
         congestion-notification-profile fcoe-cnp;
         forwarding-class-set {
            fcoe-pg {
               output-traffic-control-profile fcoe-tcp;
            }
         }
         unit 0 {
```

 Copyright © 2018, Juniper Networks, Inc.

```
            classifiers {
                ieee-802.1 fcoe-classifier;
            }
        }
    }
    xe-0/0/33 {
        congestion-notification-profile fcoe-cnp;
        forwarding-class-set {
            fcoe-pg {
                output-traffic-control-profile fcoe-tcp;
            }
        }
        unit 0 {
            classifiers {
                ieee-802.1 fcoe-classifier;
            }
        }
    }
    xe-0/0/34 {
        congestion-notification-profile fcoe-cnp;
        forwarding-class-set {
            fcoe-pg {
                output-traffic-control-profile fcoe-tcp;
            }
        }
        unit 0 {
            classifiers {
                ieee-802.1 fcoe-classifier;
            }
        }
    }
}
scheduler-maps {
    fcoe-map {
        forwarding-class fcoe scheduler fcoe-sched;
    }
}
schedulers {
    fcoe-sched {
        transmit-rate 3000000000;
        shaping-rate percent 100;
        priority low;
    }
}
```

TIP: To quickly configure the interfaces, issue the **load merge terminal** command and then copy the hierarchy and paste it into the switch terminal window.

Verification

To verify that the PFC configuration for FCoE traffic components has been created and is operating properly, perform these tasks:

- Verifying That Priority-Based Flow Control Has Been Enabled on page 440
- Verifying the Ingress Interface PFC Configuration on page 441

Verifying That Priority-Based Flow Control Has Been Enabled

Purpose Verify that PFC is enabled on the FCoE queue to enable lossless transport.

Action List the congestion notification profiles using the operational mode command **show class-of-service congestion-notification**:

```
user@switch> show class-of-service congestion-notification
Type: Input, Name: fcoe-cnp, Index: 51697
Cable Length: 100 m
  Priority     PFC          MRU
  000          Disabled
  001          Disabled
  010          Disabled
  011          Enabled      2500
  100          Disabled
  101          Disabled
  110          Disabled
  111          Disabled
Type: Output
  Priority     Flow-Control-Queues
  000
               0
  001
               1
  010
               2
  011
               3
  100
               4
  101
               5
  110
               6
  111
               7
```

Meaning The **show class-of-service congestion-notification** operational command lists all of the congestion notification profiles and which IEEE 802.1p code points have PFC enabled. The command output shows that PFC is enabled on code point **011** for the **fcoe-cnp** congestion notification profile.

 Copyright © 2018, Juniper Networks, Inc.

The command also shows the default cable length (100 meters), the default maximum receive unit (2500 bytes), and the default mapping of priorities to output queues because this example does not include configuring these options.

Verifying the Ingress Interface PFC Configuration

Purpose Verify that the classifier **fcoe-classifier** and the congestion notification profile **fcoe-cnp** are configured on ingress interfaces **xe-0/0/31**, **xe-0/0/32**, **xe-0/0/33**, and **xe-0/0/34**.

Action List the ingress interfaces using the operational mode command **show configuration class-of-service interfaces**:

```
user@switch> show configuration class-of-service interfaces xe-0/0/31
congestion-notification-profile fcoe-cnp;
unit 0 {
    classifiers {
        ieee-802.1 fcoe-classifier;
    }
}
```

```
user@switch> show configuration class-of-service interfaces xe-0/0/32
congestion-notification-profile fcoe-cnp;
unit 0 {
    classifiers {
        ieee-802.1 fcoe-classifier;
    }
}
```

```
user@switch> show configuration class-of-service interfaces xe-0/0/33
congestion-notification-profile fcoe-cnp;
unit 0 {
    classifiers {
        ieee-802.1 fcoe-classifier;
    }
}
```

```
user@switch> show configuration class-of-service interfaces xe-0/0/34
congestion-notification-profile fcoe-cnp;
unit 0 {
    classifiers {
        ieee-802.1 fcoe-classifier;
    }
}
```

Meaning The **show configuration class-of-service interfaces** commands list the congestion notification profile that is mapped to the interface (**fcoe-cnp**) and the IEEE 802.1p classifier associated with the interface (**fcoe-classifier**).

Related Documentation

- Understanding CoS Flow Control (Ethernet PAUSE and PFC) on page 414

Troubleshooting Dropped FCoE Traffic

Problem

Description: Fibre Channel over Ethernet (FCoE) traffic for which you want guaranteed delivery is dropped.

Cause

There are several possible causes of dropped FCoE traffic (the list numbers of the possible causes correspond to the list numbers of the solutions in the *Solution* section.):

1. Priority-based flow control (PFC) is not enabled on the FCoE priority (IEEE 802.1p code point) in both the input and output stanzas of the congestion notification profile.

2. The FCoE traffic is not classified correctly at the ingress interface. FCoE traffic should either use the default **fcoe** forwarding class and classifier configuration (maps the **fcoe** forwarding class to IEEE 802.1p code point 011) or be mapped to a lossless forwarding class and to the code point enabled for PFC on the input and output interfaces.

3. The congestion notification profile that enables PFC on the FCoE priority is not attached to the interface.

4. The forwarding class set (priority group) used for guaranteed delivery traffic does not include the forwarding class used for FCoE traffic.

   NOTE: This issue can occur only on switches that support enhanced transmission selection (ETS) hierarchical port scheduling. (Direct port scheduling does not use forwarding class sets.)

5. Insufficient bandwidth has been allocated for the FCoE queue or for the forwarding class set to which the FCoE queue belongs.

   NOTE: This issue can occur for forwarding class sets only on switches that support ETS hierarchical port scheduling. (Direct port scheduling does not use forwarding class sets.)

6. If you are using Junos OS Release 12.2, the **fcoe** forwarding class has been explicitly configured instead of using the default **fcoe** forwarding class configuration (forwarding-class-to-queue mapping).

Copyright © 2018, Juniper Networks, Inc.

NOTE: If you are using Junos OS Release 12.2, use the default forwarding-class-to-queue mapping for the lossless **fcoe** and **no-loss** forwarding classes. If you explicitly configure the lossless forwarding classes, the traffic mapped to those forwarding classes is treated as lossy (best effort) traffic and does *not* receive lossless treatment.

7. If you are using Junos OS Release 12.3 or later and you are not using the default **fcoe** forwarding class configuration, the forwarding class used for FCoE is not configured with the **no-loss** packet drop attribute. In Junos OS 12.3 or later, explicit forwarding classes configurations must include the **no-loss** packet drop attribute to be treated as lossless forwarding classes.

Solution The list numbers of the possible solutions correspond to the list numbers of the causes in the *Cause* section.

1. Check the congestion notification profile (CNP) to see if PFC is enabled on the FCoE priority (the correct IEEE 802.1p code point) on both input and output interfaces. Use the **show class-of-service congestion-notification** operational command to show the code points that are enabled for PFC in each CNP.

   If you are using the default configuration, FCoE traffic is mapped to code point 011 (priority 3). In this case, the input stanza of the CNP should show that PFC is enabled on code point 011, and the output stanza should show that priority 011 is mapped to flow control queue 3.

   If you explicitly configured a forwarding class for FCoE traffic, ensure that:

   - You specified the **no-loss** packet drop attribute in the forwarding class configuration
   - The code point mapped to the FCoE forwarding class in the ingress classifier is the code point enabled for PFC in the CNP input stanza
   - The code point and output queue used for FCoE traffic are mapped to each other in the CNP output stanza (if you are not using the default priority and queue, you must explicitly configure each output queue that you want to respond to PFC messages)

   For example, if you explicitly configure a forwarding class for FCoE traffic that is mapped to output queue 5 and to code point 101 (priority 5), the output of the **show class-of-service congestion-notification** looks like:

```
Name: fcoe_p5_cnp, Index: 12183
Type: Input
Cable Length: 100 m
  Priority     PFC          MRU
  000          Disabled
  001          Disabled
  010          Disabled
  011          Disabled
  100          Disabled
  101          Enabled      2500
  110          Disabled
  111          Disabled
Type: Output
  Priority     Flow-Control-Queues
  101
               5
```

2. Use the **show class-of-service classifier type ieee-802.1p** operational command to check if the classifier maps the forwarding class used for FCoE traffic to the correct IEEE 802.1p code point.

3. Ensure that the congestion notification profile and classifier are attached to the correct ingress interface. Use the operational command **show configuration class-of-service interfaces** *interface-name*.

4. Check that the forwarding class set includes the forwarding class used for FCoE traffic. Use the operational command **show configuration class-of-service**

Copyright © 2018, Juniper Networks, Inc.

forwarding-class-sets to show the configured priority groups and their forwarding classes.

5. Verify the amount of bandwidth allocated to the queue mapped to the FCoE forwarding class and to the forwarding class set to which the FCoE traffic queue belongs. Use the **show configuration class-of-service schedulers** ***scheduler-name*** operational command (specify the scheduler for FCoE traffic as the ***scheduler-name***) to see the minimum guaranteed bandwidth (**transmit-rate**) and maximum bandwidth (**shaping-rate**) for the queue.

   Use the **show configuration class-of-service traffic-control-profiles** ***traffic-control-profile*** operational command (specify the traffic control profile used for FCoE traffic as the ***traffic-control-profile***) to see the minimum guaranteed bandwidth (**guaranteed-rate**) and maximum bandwidth (**shaping-rate**) for the forwarding class set.

6. Delete the explicit FCoE forwarding-class-to-queue mapping so that the system uses the default FCoE forwarding-class-to-queue mapping. Include the **delete forwarding-classes class fcoe queue-num 3** statement at the **[edit class-of-service]** hierarchy level to remove the explicit configuration. The system then uses the default configuration for the FCoE forwarding class and preserves the lossless treatment of FCoE traffic.

7. Use the **show class-of-service forwarding-class** operational command to display the configured forwarding classes. The *No-Loss* column shows whether lossless transport is enabled or disabled for each forwarding class. If the forwarding class used for FCoE traffic is not enabled for lossless transport, include the **no-loss** packet drop attribute in the forwarding class configuration (**set class-of-service forwarding-classes class** ***fcoe-forwarding-class-name*** **queue-num** ***queue-number*** **no-loss**).

See "Example: Configuring CoS PFC for FCoE Traffic" on page 432 for step-by-step instructions on how to configure PFC for FCoE traffic, including classifier, interface, congestion notification profile, PFC, and bandwidth scheduling configuration.

Related Documentation

- **show class-of-service congestion-notification on page 986**
- Configuring CoS PFC (Congestion Notification Profiles) on page 429
- Example: Configuring CoS PFC for FCoE Traffic on page 432
- Understanding CoS Flow Control (Ethernet PAUSE and PFC) on page 414

Understanding CoS IEEE 802.1p Priorities for Lossless Traffic Flows

The switch supports up to six lossless forwarding classes. (Junos OS Release 12.3 increased support for lossless priorities from two lossless forwarding classes—the default **fcoe** and **no-loss** forwarding classes—to a maximum of six lossless forwarding classes.) Each forwarding class is mapped to an IEEE 802.1p code point (priority).

NOTE: Junos OS Release 13.1 introduced support for up to six lossless forwarding classes on QFabric systems. Throughout this document, features introduced on standalone switches in Junos OS Release 12.3 are introduced on QFabric systems in Junos OS Release 13.1 unless otherwise noted.

Only switches with native Fibre Channel (FC) interfaces, such as the QFX3500, support native FC traffic and configuration as an FCoE-FC gateway. Throughout this document, features that pertain to native FC traffic and to FCoE-FC gateway configuration apply only to switches that support native FC interfaces.

Video: Why Use PFC in a Data Center Network?

The default configuration is the same as the default configuration in Junos OS Release 12.2 and is backward-compatible. If you need only two (or fewer) lossless forwarding classes, use the default configuration, in which the **fcoe** and **no-loss** forwarding classes are lossless. If you need more than two lossless forwarding classes, you can use the two default lossless forwarding classes and configure additional lossless forwarding classes. If you do not want to use the default lossless forwarding classes, you can change them, or use only the lossless forwarding classes that you explicitly configure.

- Default Lossless Priority Configuration on page 446
- Configuring Lossless Priorities on page 449
- Configuration Rules and Recommendations on page 462
- Lossless Transport Features Introduced in Junos OS Release 12.3 (Legacy Non-ELS CLI) on page 463
- Backward Compatibility with Junos OS Releases Earlier Than Release 12.3 (Legacy Non-ELS CLI) on page 464

Default Lossless Priority Configuration

If you do not explicitly configure forwarding classes, the system uses the default forwarding class configuration, which provides two default lossless forwarding classes (*fcoe* and *no-loss*). (If you change the forwarding class configuration, the changes apply to all traffic on that device because forwarding classes are global to a particular device.)

If you do not explicitly configure classifiers, and you do not explicitly configure flow control to pause output queues (configured in the output stanza of the CNP), the default classifier

Copyright © 2018, Juniper Networks, Inc.

and the default output queue pause configurations are applied to all Ethernet interfaces on the switches (or Node devices). You can override the default classifier and the default output queue pause configuration on a per-interface basis by applying an explicit configuration to an Ethernet interface. The default configuration is used on all Ethernet interfaces that do not have an explicit configuration.

NOTE: If you do not configure flow control on output queues, the default configuration uses a one-to-one mapping of IEEE 802.1p code points (priorities) to output queues by number. For example, priority 0 (code point 000) is mapped to queue 0, priority 1 (code point 001) is mapped to queue 1, and so on. If you do not use the default configuration, you must explicitly configure flow control on each output queue that you want to enable for PFC pause in the output stanza of the CNP.

In the default configuration, only queue 3 and queue 4 are enabled to respond to pause messages from the connected peer. For queue 3 to respond to pause messages, priority 3 (code point 011) must be enabled for PFC in the input stanza of the CNP. For queue 4 to respond to pause messages, priority 4 (code point 100) must be enabled for PFC in the input stanza of the CNP.

The default configuration provides the following lossless behavior:

- Two default lossless forwarding classes (the **no-loss** packet drop attribute is applied to these forwarding classes automatically):
  fcoe—Mapped to output queue 3
  no-loss—Mapped to output queue 4
- A default classifier that maps the fcoe forwarding class to IEEE 802.1p priority 3 (011) and the no-loss forwarding class to IEEE 802.1p priority 4 (100)
- Priority-based flow control (PFC) enabled on Ethernet interface output queues 3 and 4 when those queues carry lossless traffic (traffic that is mapped to the fcoe and no-loss forwarding classes, respectively).

  On switches that can be configured as an FCoE-FC gateway, native FC interfaces (NP_Ports), with default flow control enabled on output queue 3 (IEEE 802.1p priority 3) for FCoE/FC traffic.
- DCBX is enabled on all interfaces in autonegotiation mode, and automatically exchanges FCoE application protocol type, length, and values (TLVs) on interfaces that carry FCoE traffic. However, if you explicitly configure DCBX protocol TLV exchange for any application, then you must explicitly configure protocol TLV exchange for every application for which you want DCBX to exchange TLVs, including FCoE.
- On Ethernet ports, PFC buffer calculations use the following default values to determine the headroom buffer size:
  Cable length—100 meters (approximately 328 feet)
  MRU for priority 3 traffic—2500 bytes
  MRU for priority 4 traffic—9216 bytes
  Maximum transmission unit (MTU)—1522 (or the configured MTU value for the interface)

NOTE: If you configure flow control on a priority that is not one of the default flow control priorities, the default MRU value is 2500 bytes. For example, if you configure flow control on priority 5 and you do not configure an MRU value, the default MRU value is 2500 bytes.

NOTE: In addition, to support lossless transport, PFC must be enabled explicitly on the lossless IEEE 802.1p priorities (code points) on ingress Ethernet interfaces; no default PFC configuration is applied at ingress interfaces. If you do not enable PFC on lossless priorities, those priorities might experience packet loss during periods of congestion. For example, if you want lossless FCoE traffic and you are using the default fcoe forwarding class, you use a CNP to enable PFC on priority 3 (code point 011), and apply that CNP to all ingress interfaces that carry FCoE traffic.

You can override the default classifier and the default output queue pause configuration on a per-interface basis by applying an explicit configuration to an Ethernet interface.

The default CoS configuration is backward-compatible with the *default* CoS configuration of software releases before Junos OS Release 12.3. If you explicitly configure lossless transport, ensure that the input and output queues corresponding to the lossless forwarding classes are explicitly configured for PFC pause.

Table 93 on page 448 summarizes the default forwarding classes and their mapping to output queues, IEEE 802.1p priorities, and drop attributes.

Table 93: Mapping of Default Forwarding Class to Queue, IEEE 802.1p Priority, and Drop Attribute

Forwarding Class Name	Output Queue	Priority	Drop Attribute
best-effort	0	0	drop
fcoe	3	3	no-loss
no-loss	4	4	no-loss
network-control	7	7	drop

On switches that use the same forwarding classes and output queues for unicast and multidestination (multicast, broadcast, and destination lookup fail) traffic, these forwarding classes carry both unicast and multidestination traffic. Only unicast traffic is treated as lossless traffic. Multidestination traffic is not treated as lossless traffic, even on lossless output queues.

On switches that use different forwarding classes and output queues for unicast and multidestination traffic, there is one default multidestination forwarding class named *mcast*, which is mapped to output queue 8 with a drop attribute of drop. (Incoming

Copyright © 2018, Juniper Networks, Inc.

multidestination traffic on all IEEE 802.1p priorities is mapped to the mcast forwarding class by default.)

Configuring Lossless Priorities

To configure more than two lossless priorities (forwarding classes), or to change the default mapping of lossless forwarding classes to priorities and paused output queues, you must explicitly configure the switch instead of using the default configuration. Configuring lossless priorities includes:

- Configuring forwarding classes with the no-loss packet drop attribute.
- Using a CNP to configure PFC on ingress interfaces and flow control (PFC) on egress interfaces.
- Configuring a classifier to map IEEE 802.1p priorities (code points) to the correct forwarding classes (the forwarding classes for which you want lossless transport).

NOTE: If you expect a large amount of lossless traffic on your network and configure multiple lossless traffic classes, ensure that you reserve enough scheduling resources (bandwidth) and buffer space to support the lossless flows. (For switches that support shared buffer configuration, "Understanding CoS Buffer Configuration" on page 568 describes how to configure buffers and provides a recommended buffer configuration for networks with larger amounts of lossless traffic. Buffer optimization is automatic on switches that use virtual output queues.)

In addition, on Ethernet interfaces, DCBX must exchange the appropriate application protocol TLVs for the lossless traffic. On switches that can act as an FCoE-FC gateway, you need to remap the FCoE priority on native FC interfaces if your network uses a priority other than 3 (IEEE code point 011) for FCoE traffic. This section describes:

- Configuring Lossless Forwarding Classes (Packet Drop Attribute) on page 449
- Congestion Notification Profiles (PFC Configuration) on page 451
- Configuring DCBX (Application Protocol TLV Exchange) on page 458
- Fate Sharing Among Traffic Classes on page 458
- Transit Switch Configuration Versus FCoE-FC Gateway Configuration on page 460
- Configuration Results and Commit Checks on page 460

Configuring Lossless Forwarding Classes (Packet Drop Attribute)

Junos OS Release 12.3 introduced the *no-loss* parameter for forwarding class configuration. (Although it uses the same name, this is not the no-loss default forwarding class. It is a packet drop attribute you can specify to configure any forwarding class as a lossless forwarding class.)

NOTE: On switches that use different forwarding classes for unicast and multidestination traffic, the forwarding class must be a unicast forwarding class. On switches that use the same forwarding classes for unicast and multidestination traffic, only unicast traffic receives lossless treatment.

You can configure up to six forwarding classes (depending on system architecture and the availability of system resources) as lossless forwarding classes by including the **no-loss** drop attribute at the **[edit class-of-service forwarding-classes class *forwarding-class-name* queue-num *queue-number*]** hierarchy level.

If you use the default fcoe or no-loss forwarding classes, they include the no-loss drop attribute by default. If you explicitly configure the fcoe or no-loss forwarding classes and you want to retain their lossless behavior, you *must* include the no-loss drop attribute in the configuration.

NOTE: All forwarding classes mapped to the same output queue must have the same packet drop attribute. (All forwarding classes mapped to the same output queue must be either lossy or lossless. You cannot map both a lossy and a lossless forwarding class to the same queue.)

To avoid fate sharing (a congested flow affecting an uncongested flow), use a one-to-one mapping of lossless forwarding classes to IEEE 802.1p code points (priorities) and queues. Map each lossless forwarding class to a different queue, and classify incoming traffic into forwarding classes so that each forwarding class transports traffic of only one priority (code point).

The fcoe and no-loss forwarding classes are special cases, because in the default configuration, they are configured for lossless behavior (providing that you also enable PFC on the priorities mapped to the fcoe and no-loss forwarding classes in the CNP input stanza).

Table 94 on page 451 summarizes the possible configurations of the fcoe and no-loss forwarding classes in Junos OS Release 12.3 and later, and the result of those configurations in terms of lossless traffic behavior. It is assumed that PFC, DCBX, and classifiers are properly configured.

 Copyright © 2018, Juniper Networks, Inc.

Table 94: FCoE and No-Loss Forwarding Class Configuration in Junos OS Release 12.3

Explicit (User-Configured) or Default Forwarding Class Configuration	Packet Drop Attribute	Result and Notes
Default	Default	The fcoe and no-loss forwarding classes are lossless. NOTE: Even if you explicitly configure other forwarding classes (lossy or lossless forwarding classes), the fcoe and no-loss forwarding classes remain lossless because they are not explicitly configured.
Explicit	Not specified in the explicit forwarding class configuration	The fcoe and no-loss forwarding classes are lossy because they do not include the no-loss drop attribute.
Explicit	No-loss	The fcoe and no-loss forwarding classes are lossless.
Explicit, configured in Junos OS Release 12.2 or earlier	Not specified (packet drop attribute was not available before Junos OS Release 12.3)	The fcoe and no-loss forwarding classes are lossy in Junos OS Release 12.3 and later because they do not include the no-loss drop attribute. NOTE: To retain lossless behavior, before you upgrade to Junos OS Release 12.3, delete the explicit configuration so that the system uses the default configuration. Alternatively, you can reconfigure the forwarding classes with the no-loss packet drop attribute after upgrading to Junos OS Release 12.3 or later.

For all other forwarding classes except the **fcoe** and **no-loss** forwarding classes, you must explicitly configure lossless transport by specifying the no-loss packet drop attribute, because the default configuration for all other forwarding classes is lossy (the no-loss packet drop attribute is not applied).

Congestion Notification Profiles (PFC Configuration)

Use CNPs to configure lossless PFC characteristics on input and output interfaces.

The input stanza of a CNP enables PFC on specified IEEE 802.1p priorities (code points) and fine-tunes headroom buffer settings by configuring the maximum receive unit (MRU) value and cable length on ingress interfaces.

The output stanza of a CNP enables PFC (flow control) on output queues for specified IEEE 802.1p priorities so that the queues can respond to PFC pause messages from the connected peer on the priority of your choice. (By default, output queues 3 and 4 respond to received PFC messages when those queues carry lossless traffic in the fcoe and no-loss forwarding classes, respectively.)

To achieve lossless transport, the priority paused at the ingress interfaces must match the priority paused at the egress interfaces for a given traffic flow. For example, if you configure ingress interfaces to pause traffic tagged with IEEE 802.1p priority 5 (code point 101) and priority 5 traffic is mapped to output queue 5, then you must also configure the corresponding output interfaces to pause priority 5 on queue 5. In addition, the forwarding class mapped to queue 5 must be configured as a lossless forwarding class (using the no-loss drop attribute).

CAUTION: Any change to the PFC configuration on a port temporarily blocks the entire port (not just the priorities affected by the PFC change) so that the port can implement the change, then unblocks the port. Blocking the port stops ingress and egress traffic, and causes packet loss on all queues on the port until the port is unblocked.

A change to the PFC configuration means any change to a CNP, including changing the input portion of the CNP (enabling or disabling PFC on a priority, or changing the MRU or cable-length values) or changing the output portion the CNP that enables or disables output flow control on a queue. A PFC configuration change only affects ports that use the changed CNP.

The following actions change the PFC configuration:

- Deleting or disabling a PFC configuration (input or output) in a CNP that is in use on one or more interfaces. For example:
  1. An existing CNP with an input stanza that enables PFC on priorities 3, 5, and 6 is configured on interfaces xe-0/0/20 and xe-0/0/21.
  2. We disable the PFC configuration for priority 6 in the input CNP, and then commit the configuration.
  3. The PFC configuration change causes all traffic on interfaces xe-0/0/20 and xe-0/0/21 to stop until the PFC change has been implemented. When the PFC change has been implemented, traffic resumes.
- Configuring a CNP on an interface. (This changes the PFC state by enabling PFC on one or more priorities.)
- Deleting a CNP from an interface. (This changes the PFC state by disabling PFC on one or more priorities.)

Configuring Input Interface Flow Control (PFC and Headroom Buffer Calculation)

On Ethernet interfaces, the input stanza of the CNP enables PFC on specified priorities so that the ingress interface can send a pause message to the connected peer during periods of congestion. Input CNPs also fine-tune the headroom buffers used for PFC support by allowing you to configure the MRU value and cable length (if you do not want to use the default configuration).

Copyright © 2018, Juniper Networks, Inc.

Headroom buffers support lossless transport by storing the traffic that arrives at an interface after the interface sends a PFC flow control message to pause incoming traffic. Until the connected peer receives the flow control message and pauses traffic, the interface continues to receive traffic and must buffer it (and the traffic that is still on the wire after the peer pauses) to prevent packet loss.

The system uses the MRU and the length of the attached physical cable to calculate buffer headroom allocation. The default configuration values are:

- MRU for priority 3 traffic—2500 bytes
- MRU for priority 4 traffic—9216 bytes
- Cable length—100 meters (approximately 328 feet)

NOTE: If you configure flow control on a priority that is not one of the default flow control priorities, the default MRU value is 2500 bytes. For example, if you configure flow control on priority 5 and you do not explicitly configure an MRU value, the default MRU value is 2500 bytes.

You can fine-tune the MRU and the cable length to adjust the size of the headroom buffer on an interface. The switch has a shared global buffer pool and dynamically allocates headroom buffer space to lossless queues as needed.

A lower MRU or a shorter cable length reduces the amount of headroom buffer required on an interface and leaves more headroom buffer space for other interfaces. A higher MRU or a longer cable length increases the amount of headroom buffer space required on an interface and leaves less headroom buffer space for other interfaces.

In many cases, you can better utilize the headroom buffers by reducing the MRU value (for example, an MRU of 2180 is sufficient for most FCoE networks) and by reducing the cable length value if the physical cable is less than 100 meters long.

NOTE: When you configure the headroom buffers by changing the MRU or the cable length, and commit the configuration, the system performs a commit check and rejects the configuration if sufficient headroom buffer space is not available.

However, the system does not perform a commit check but instead returns a syslog error if:

- The buffers are configured on a LAG interface.
- The default classifier is used on the interface (instead of a user-configured classifier).
- The interface has not been created yet.

Configuring Output Interface Flow Control (PFC)

On Ethernet interfaces, you can use the output stanza of the CNP to configure flow control on output queues and enable PFC pause response on specified IEEE 802.1p priorities.

NOTE: **On switches that use different output queues for unicast and multidestination traffic, the queue must be a unicast output queue.**

By default, output queues 3 and 4 are enabled for PFC pause on priorities 3 (IEEE 802.1p code point 011) and 4 (IEEE 802.1p code point 100). The default PFC pause response supports the default lossless forwarding class configuration, which maps the fcoe forwarding class to queue 3 and priority 3, and maps the no-loss forwarding class to queue 4 and priority 4.

Configuring PFC on output queues enables you to pause any priority on any output queue on any Ethernet interface. Output flow control enables you to use more than two output queues to support lossless traffic flows (you can configure up to six lossless forwarding classes and map them to different output queues that are enabled for PFC pause). Output queue flow control also enables you to support multiple lossless forwarding classes (each mapped to a different priority and output queue) for one class of traffic.

NOTE: **Output flow control only works when PFC is enabled in the CNP input stanza on the corresponding priorities on the interface. For example, if you enable output flow control on priority 5 (IEEE 802.1p code point 101), then you must also enable PFC in the CNP on the input stanza on priority 5.**

For example, if the converged Ethernet network uses two different priorities for FCoE traffic (for example, priority 3 and priority 5), then you can classify those priorities into different lossless forwarding classes that are mapped to different output queues:

1. Configure two lossless forwarding classes for FCoE traffic, with each forwarding class mapped to a different output queue. For example, you could use the default fcoe forwarding class, which is mapped to queue 3, and you could configure a second lossless forwarding class called fcoe1 and map it to queue 5. The fcoe forwarding class is for priority 3 FCoE traffic (code point 011), and the fcoe1 forwarding class is for priority 5 (code point 101) FCoE traffic.

2. Configure a classifier that maps each forwarding class to the desired IEEE 802.1p code point (priority). If FCoE traffic on both priorities uses one interface, the classifier must classify both forwarding classes to the correct priorities. If FCoE traffic of different priorities uses different interfaces, the classifier configuration on each interface must map the correct priority to the corresponding lossless forwarding class.

3. Apply the classifier to the interfaces that carry FCoE traffic. The classifier determines the mapping of forwarding classes to priorities on each interface.

Copyright © 2018, Juniper Networks, Inc.

To configure lossless transport for these forwarding classes, you also need to:

- Enable PFC on the two priorities (3 and 5 in this example) at the ingress interfaces in the CNP input stanza.
- Configure PFC on the output queues and priorities for the forwarding classes in the CNP output stanza so that the interface can respond to pause messages received from the connected peer.

NOTE: When you configure the CNP on an interface, all ingress and egress traffic is blocked until the configuration is implemented, then the interface is unblocked and traffic resumes. During the time the interface is blocked, all queues on the interface experience packet loss.

- Configure DCBX to exchange application protocol TLVs on both FCoE priorities.

NOTE: If you do not configure flow control to pause output queues, the default configuration uses a one-to-one mapping of IEEE 802.1p code points (priorities) to output queues by number. For example, priority 0 (code point 000) is mapped to queue 0, priority 1 (code point 001) is mapped to queue 1, and so on. By default, only queues 3 and 4 are enabled to respond to pause messages from the connected peer, and you must explicitly enable PFC on the corresponding priorities in the CNP input stanza to achieve lossless behavior.

If you do not use the default configuration, you must explicitly configure flow control on each output queue that you want to enable for PFC pause. For example, if you explicitly configure flow control on output queue 5, the default configuration is no longer valid, and only output queue 5 is enabled for PFC pause. Output queues 3 and 4 are no longer enabled for PFC pause, so traffic using those queues no longer responds to PFC pause messages even if the corresponding forwarding class is configured with the no-loss drop attribute. To retain the pause configuration on output queues 3 and 4 and configure flow control on queue 5, you need to explicitly configure flow control on queues 3, 4, and 5.

On switches that use different output queues for unicast and multidestination traffic, you cannot configure flow control to pause a multidestination output queue. You can configure flow control to pause only unicast output queues. On switches that use the same output queues for unicast and multidestination traffic, only unicast traffic receives lossless treatment.

Output Interface Flow Control Profiles

Configuring the CNP output stanza creates an output flow control profile that tells egress ports the queues on which the Ethernet interface should respond to PFC pause messages. Although you can create an unlimited number of CNPs that contain input stanzas only, the number of CNPs that you can configure with output stanzas is limited:

- For standalone switches that are not part of a QFabric system, you can configure up to two output interface flow control profiles. (You can configure up to two CNPs with output stanzas.)
- For QFabric systems, you can configure one output interface flow control profile per Node device. (You can configure one CNP with an output stanza per Node device.)

There are a total of four output flow control profiles.

The system has a default output flow control profile that is applied to all Ethernet interfaces when the CNP attached to the interface has only an input stanza and does not include an output stanza. The default profile responds to PFC pause messages received on queue 3 (for priority 3, for the default fcoe forwarding class) and on queue 4 (for priority 4, for the default no-loss forwarding class), and is effective only if PFC is configured on those priorities in the CNP input stanza.

Additionally, the system has two internal output flow control profiles that it applies automatically to fabric (FTE) ports and to native FC interfaces (NP_Ports). When the switch is not part of a QFabric system, the profile normally used for FTE ports is available for user configuration and provides a second user-configurable profile. (That is why standalone switches have two user-configurable output flow control profiles, but Node devices on a QFabric system have only one user-configurable output flow control profile.)

Because one output CNP can configure PFC pause response on multiple output queues (priorities), one user-configurable output CNP is usually flexible enough to specify the desired PFC response on all programmed interfaces.

NOTE: **Each port can use one output flow control profile. You cannot apply more than one profile to one port.**

Output flow control profiles can be expressed in table format. For example, Table 95 on page 456 shows the default output flow control profile that pauses priorities 3 and 4 on queues 3 and 4 (remember that PFC must also be enabled on code points 3 and 4 in the CNP input stanza in order for PFC to work):

Table 95: Default Output Flow Control Profile

IEEE 802.1p Priority Specified in Received PFC Frame	Paused Output Queue
0 (000)	—
1 (001)	—
2 (010)	—
3 (011)	3
4 (100)	4
5 (101)	—

Copyright © 2018, Juniper Networks, Inc.

Table 95: Default Output Flow Control Profile (continued)

IEEE 802.1p Priority Specified in Received PFC Frame	Paused Output Queue
6 (110)	—
7 (111)	—

Table 96 on page 457 is an example of a user-configured output flow control profile. Using the example from the preceding section, the CNP output stanza configures flow control on output queue 5, and also explicitly configures output flow control on queues 3 and 4 for the fcoe and no-loss forwarding classes. (If you explicitly configure an output CNP, you must explicitly configure every output queue that you want to respond to PFC messages, because the user-configured profile overrides the default profile. If this example did not include queues 3 and 4, those queues would no longer respond to received PFC messages.)

Table 96: User-Configred Output Flow Control Profile

IEEE 802.1p Priority Specified in Received PFC Frame	Paused Output Queue
0 (000)	—
1 (001)	—
2 (010)	—
3 (011)	3
4 (100)	4
5 (101)	5
6 (110)	—
7 (111)	—

Remember that you must also enable PFC on code points 3, 4, and 5 in the CNP input stanza for this configuration to work. When you configure the CNP on an interface, all ingress and egress traffic is blocked until the configuration is implemented, then the interface is unblocked and traffic resumes. During the time the interface is blocked, all queues on the interface experience packet loss.

Configuring PFC Across Layer 3 Interfaces on QFX5210, QFX5200, QFX5100, EX4600, and QFX10000 Switches

Enabling PFC on traffic flows is based on the IEEE 802.1p code point (priority) in the priority code point (PCP) field of the Ethernet frame header (sometimes known as the CoS bits). To enable PFC on traffic that crosses Layer 3 interfaces, the traffic must be classified by its IEEE 802.1p code point, not by its DSCP (or DSCP IPv6) code point.

Copyright © 2018, Juniper Networks, Inc.

See *Understanding PFC Functionality Across Layer 3 Interfaces* for a conceptual overview of how to enable PFC on traffic across Layer 3 interfaces. See *Example: Configuring PFC Across Layer 3 Interfaces* for an example of how to configure PFC on traffic that traverses Layer 3 interfaces.

Configuring DCBX (Application Protocol TLV Exchange)

For applications that require lossless transport, DCBX exchanges application protocol TLVs with the connected peer interface. By default, DCBX advertises FCoE application protocol TLVs on all interfaces that are enabled for DCBX, and by default, DCBX is enabled on all interfaces. DCBX advertises no other applications by default.

For each application (for example, iSCSI) that you want to configure for lossless transport, you must enable the interfaces which carry that application traffic to exchange DCBX protocol TLVs with the connected peer. The TLV exchange allows the peer interfaces to negotiate a compatible configuration to support the application.

If you configure DCBX to advertise any application, the default DCBX advertisement is overridden, and DCBX advertises only the configured applications. If you want an interface to advertise only the FCoE application, you do not have to configure DCBX application protocol TLV exchange; instead, you can use the default configuration.

If you want DCBX to advertise other applications, you must explicitly configure an application map and apply it to the interfaces on which you want to exchange protocol TLVs for those applications. If you want to exchange FCoE application protocol TLVs in addition to other application protocol TLVs, you must also explicitly configure the FCoE application in the application map. "Understanding DCBX Application Protocol TLV Exchange" on page 546 describes how application mapping works.

NOTE: **Lossless transport also requires that you enable PFC on the correct priority (IEEE 802.1p code point) on the ingress interfaces using an input CNP. If the priority you pause at the ingress interfaces is not mapped to queue 3 or queue 4 (the two output queues that are enabled for PFC pause flow control by default), then you must also enable the output queues that correspond to paused input priorities to pause using the output stanza of the CNP.**

Fate Sharing Among Traffic Classes

You can configure different lossless (or lossy) traffic flows to share fate—that is, to receive the same CoS treatment.

Fate sharing is not desirable for I/O convergence. Instead of independent control of the fate of each type of flow, different types of flows receive the same treatment. Fate sharing is particularly undesirable for lossless flows. If one lossless flow experiences congestion and must be paused, that affects flows that share fate with the congested flow even if the other flows are not experiencing congestion, and also can cause ingress port congestion. If your network requires that all 802.1p priorities be lossless, you can achieve that by allowing some fate sharing among the eight priorities by spreading them across up to six lossless forwarding classes.

 Copyright © 2018, Juniper Networks, Inc.

If the number of lossless priorities is less than or equal to the number of configured lossless forwarding classes, then you can avoid fate sharing by configuring a one-to-one mapping of forwarding classes to IEEE 802.1p code points (priorities) and output queues. (Each forwarding class should be mapped to a different output queue and classified to a different priority.)

If you want to configure different traffic flows to share fate, two fate-sharing configurations are supported: mapping one forwarding class to more than one IEEE 802.1p code point (priority), and mapping two forwarding classes to the same output queue:

1. If you map one lossless forwarding class to more than one priority, the traffic tagged with each of the priorities uses the same CoS properties associated (the CoS properties associated with the forwarding class). For example, configuring a forwarding class called fc1, mapping it to queue 1, and mapping it to code points 101 and 110 using a classifier named classify1 results in the traffic tagged with priorities 101 and 110 sharing fate:

   ```
   user@switch# set class-of-service forwarding-classes class fc1 queue-num 1 no-loss
   user@switch# set class-of-service classifiers ieee-802.1 classify1 forwarding class fc1
   loss-priority low code-points 101
   user@switch# set class-of-service classifiers ieee-802.1 classify1 forwarding class fc1
   loss-priority low code-points 110
   ```

   In this case, if the traffic mapped to either priority experiences congestion, both priorities are paused because they are mapped to the same forwarding class and are therefore treated similarly.

2. If you map multiple lossless forwarding classes to the same output queue, the traffic mapped to the forwarding classes uses the same output queue. This increases the amount of traffic on the queue, and can create congestion that affects all of the traffic flows that are mapped to the queue. For example, configuring two forwarding classes called fc1 and fc2, mapping both forwarding classes to queue 1, and mapping the forwarding classes to code points 101 and 110 (respectively) using a classifier named classify1, results in the traffic tagged with priorities 101 and 110 sharing fate on the same output queue:

   ```
   user@switch# set class-of-service forwarding-classes class fc1 queue-num 1 no-loss
   user@switch# set class-of-service forwarding-classes class fc2 queue-num 1 no-loss
   user@switch# set class-of-service classifiers ieee-802.1 classify1 forwarding class fc1
   loss-priority low code-points 101
   user@switch# set class-of-service classifiers ieee-802.1 classify1 forwarding class fc2
   loss-priority low code-points 110
   ```

   In this case, even though the two forwarding classes use different IEEE 802.1p priorities, if one forwarding class experiences congestion, it affects the other forwarding class. The reason is that if the output queue is paused because of congestion on either forwarding class, all traffic that uses that queue is paused. Since both forwarding classes are mapped to the queue, the traffic mapped to both forwarding classes is paused.

NOTE: If you map more than one forwarding class to a queue, all of the forwarding classes mapped to the same queue must have the same packet drop attribute (all of the forwarding classes must be lossy, or all of the forwarding classes mapped to a queue must be lossless).

Transit Switch Configuration Versus FCoE-FC Gateway Configuration

On a transit switch (all Ethernet ports, no native FC ports) that forwards FCoE traffic (or other traffic that requires lossless transport across the Ethernet network), the configuration of classifiers, lossless forwarding classes, DCBX, and PFC on ingress and egress interfaces to support lossless transport is as described in this document.

When a switch acts as an FCoE-FC gateway (if native FC interfaces are supported on your switch), the system uses native FC interfaces (NP_Ports) to connect to the FC switch (or FCoE forwarder) at the FC network edge. You cannot apply CNPs or DCBX to native FC interfaces, only to Ethernet interfaces.

On an FCoE-FC gateway, the Ethernet interface configuration of classifiers, DCBX, and PFC is the same as the Ethernet interface configuration on a transit switch. The configuration of lossless forwarding classes is also the same.

However, supporting lossless transport on native FC interfaces requires that you rewrite the IEEE 802.1p priority value *if* your network uses any priority other than 3 (IEEE code point 011) for FCoE traffic. If your network uses priority 3 for FCoE traffic, you can and should use the default configuration on native FC interfaces.

By default, native FC interfaces tag packets with priority 3 when they encapsulate the incoming FC packets in Ethernet. If your FCoE network uses a different priority than 3 for FCoE traffic, you need to rewrite the priority value to the value that your network uses on the FC interface, classify the FCoE traffic to the correct priority on the Ethernet interfaces, and enable PFC on the correct priority on the Ethernet interfaces, as described in "Understanding CoS IEEE 802.1p Priority Remapping on an FCoE-FC Gateway" on page 519.

Configuration Results and Commit Checks

Different configurations of forwarding classes and their drop attributes, classifiers, CNPs (PFC flow control), and Ethernet PAUSE (IEEE 802.3X flow control) result in different system behaviors.

Table 97 on page 461 describes the results of the possible lossless transport configurations in each case. The assumption in the *Result* column is that the system's buffer headroom calculation resulted in a successful configuration.

However, if the system calculates that there is insufficient buffer space to support the configuration, a commit check prevents you from committing the configuration on an individual Ethernet interface. For LAG interfaces, the system does not issue a commit check error but instead issues a syslog message.

 Copyright © 2018, Juniper Networks, Inc.

NOTE: After you configure lossless transport for a LAG interface, be sure to check the syslog messages to confirm that the commit was successful.

Table 97: Results of Lossless Priority Configuration

Classifier Configuration	Congestion Notification Profile Configuration	Ethernet PAUSE (IEEE 802.3X) Configuration	Result
None (default classifier)	None	None	System default configuration. No flows are lossless. To achieve lossless behavior for the default fcoe and no-loss forwarding classes, you must configure an input CNP to enable PFC on their IEEE 802.1p code points (011 and 100 respectively).
Classifier with no lossless forwarding classes	None	None	No lossless traffic flows are configured; all traffic is best effort.
Classifier with at least one lossless forwarding class	None	None	Because no CNP is attached to interfaces, PFC is not enabled on the code point of the lossless traffic and no headroom buffer is allocated to the lossless queue, so packets can drop during periods of congestion. This configuration does not achieve lossless behavior.
None (default classifier)	PFC enabled on the fcoe and no-loss forwarding class code points (priorities)	None	The default classifier classifies traffic into two lossless forwarding classes, fcoe and no-loss. The CNP enables PFC on the priorities mapped to both lossless forwarding classes, resulting in lossless behavior for traffic mapped to the fcoe and no-loss forwarding classes.
None (default classifier)	None	Flow control enabled	The system calculates buffer headroom for the physical link based on the interface MTU and the default cable length. The system does not calculate buffer headroom for individual output queues. Because Ethernet PAUSE is enabled on the link instead of PFC being enabled on the lossless priorities, the entire link is paused during periods of congestion. This configuration results in lossless behavior for all of the forwarding classes on the link, but because all traffic is paused, this can cause greater overall network congestion.

Copyright © 2018, Juniper Networks, Inc.

Table 97: Results of Lossless Priority Configuration (continued)

Classifier Configuration	Congestion Notification Profile Configuration	Ethernet PAUSE (IEEE 802.3X) Configuration	Result
Classifier with at least one lossless forwarding class	PFC enabled on the lossless forwarding class code points (priorities)	None	Headroom buffer allocated only to priorities that are mapped to the lossless forwarding classes and on which PFC is enabled. This configuration achieves lossless behavior for the lossless forwarding classes.
Classifier with no lossless forwarding classes	None	Flow control enabled	The system calculates buffer headroom for the physical link based on the interface MTU and the default cable length, and it pauses all traffic on the link during periods of congestion.
Classifier with at least one lossless forwarding class	None	Flow control enabled	The system calculates buffer headroom for the physical link based on the interface MTU and the default cable length, and it pauses all traffic on the link during periods of congestion.
Classifier with at least one lossless forwarding class	PFC enabled on the lossless forwarding class code points (priorities)	Flow control enabled on a *different* interface than the interface with the CNP	The system checks the available buffer space for both the PFC-enabled priorities and for the other link. If sufficient buffer space is available, the lossless forwarding classes configured with PFC on one interface and also all of the traffic on the link with Ethernet PAUSE enabled achieve lossless behavior.

NOTE: **If you attempt to configure both PFC and Ethernet PAUSE on a link, the system returns a commit error. PFC and Ethernet PAUSE are mutually exclusive configurations on an interface.**

Configuration Rules and Recommendations

Keep in mind the following configuration rules and recommendations when you configure lossless traffic flows:

- You can configure a maximum of six lossless forwarding classes (forwarding classes with the no-loss packet drop attribute).
- All forwarding classes that you map to the same queue must have the same packet drop attribute (all of the forwarding classes must be lossy, or all of the forwarding classes must be lossless).
- Do not configure weighted random early detection (WRED) on lossless forwarding classes. (Do not associate a drop profile with a forwarding class that has the no-loss packet drop attribute.)

Copyright © 2018, Juniper Networks, Inc.

- On switches that use different forwarding classes and output queues for unicast and multidestination traffic, you cannot configure flow control to pause a multidestination output queue. You can configure PFC flow control only to pause unicast output queues.
- On switches that use different forwarding classes and output queues for unicast and multidestination traffic, forwarding classes mapped to multidestination queues (queues 8 through 11) cannot have the no-loss packet drop attribute. (Multidestination forwarding classes cannot be configured as lossless forwarding classes.)

Lossless Transport Features Introduced in Junos OS Release 12.3 (Legacy Non-ELS CLI)

Support for lossless transport introduced in Junos OS Release 12.3 includes:

- Configuring up to six lossless forwarding classes.
- Configuring PFC pause on output queues to program the output queues that can respond to PFC pause messages received from the connected peer. The priorities you pause on output queues must match the priorities on which you enable PFC on the corresponding ingress interfaces. For example, if you program output queues to pause priorities 3 (011) and 5 (101), then you must also enable pause on priorities 3 and 5 on the corresponding ingress interfaces. Configuring flow control on the output queues and enabling PFC on the corresponding input queues allows you to pause up to six priorities (forwarding classes).
- Controlling the headroom buffer on Ethernet interfaces by configuring the maximum receive unit (MRU) size for the traffic mapped to an IEEE 802.1p priority (configured per priority) and the length of the attached cable (configured per interface). The MRU size can range up to full jumbo packet size (9216 bytes).
- Remapping (rewriting) IEEE 802.1p priorities on native Fibre Channel (FC) interfaces when the system is acting as an FCoE-FC gateway. If the Ethernet (FCoE) network uses a different IEEE 802.1p priority than priority 3 (011) for FCoE traffic, then you can use priority remapping to classify FCoE traffic into a lossless forwarding class mapped to that different priority (see "Understanding CoS IEEE 802.1p Priority Remapping on an FCoE-FC Gateway" on page 519).

Lossless transport still requires configuring previously existing features, including enabling PFC on the lossless priorities on ingress interfaces, and configuring classifiers to classify incoming traffic into lossless forwarding classes based on the IEEE 802.1p priority tag of the packet.

NOTE: If you expect a large amount of lossless traffic on your network and configure multiple lossless traffic classes, ensure that you reserve enough scheduling resources (bandwidth) and lossless headroom buffer space to support the lossless flows. ("Understanding CoS Buffer Configuration" on page 568 describes how to configure buffers and provides a recommended buffer configuration for networks with larger amounts of lossless traffic.)

Backward Compatibility with Junos OS Releases Earlier Than Release 12.3 (Legacy Non-ELS CLI)

The addition of the no-loss packet drop attribute to forwarding class configuration means that when you upgrade from an earlier release to Junos OS Release 12.3, the new software might not preserve the lossless forwarding class configuration of the fcoe and no-loss forwarding classes.

If you used the default forwarding class configuration for the fcoe and no-loss forwarding classes, the CoS configuration is backward-compatible. You do not have to do anything to preserve the lossless behavior of traffic that uses those forwarding classes when you upgrade to Junos OS Release 12.3. (This is because the default configuration of these two forwarding classes includes the no-loss packet drop attribute.)

However, if you explicitly configured the fcoe or the no-loss forwarding class by including the **set forwarding-classes class** ***forwarding-class-name*** **queue-num** ***queue-number*** statement at the **[edit class-of-service]** hierarchy level, then those forwarding classes are no longer lossless, they are lossy. (They are lossy because explicit configuration in releases earlier than Junos OS Release 12.3 did not use the no-loss packet drop attribute.) In Junos OS Release 12.3 and later, you must include the no-loss packet drop attribute in explicit forwarding class configurations to configure a lossless forwarding class.

For example, before Junos OS Release 12.3, the following explicit configuration resulted in a lossless forwarding class:

```
user@switch# set class-of-service forwarding-classes class fcoe queue-num 3
```

However, in Junos OS Release 12.3, this configuration is lossy because it does not include the no-loss packet drop attribute. To preserve lossless behavior, after upgrading to Junos OS Release 12.3, you need to add the no-loss drop attribute:

```
user@switch# set class-of-service forwarding-classes class fcoe queue-num 3 no-loss
```

Alternatively, you can delete the explicit configuration before you upgrade to Junos OS Release 12.3 so that the system uses the default forwarding class, which is lossless:

```
user@switch# delete class-of-service forwarding-classes class fcoe queue-num 3
```

NOTE: The explicit configuration of other forwarding classes does not affect the lossless (or lossy) state of the fcoe and no-loss forwarding classes, because only the fcoe and no-loss forwarding classes were lossless forwarding classes before Junos OS Release 12.3. For example, if you explicitly configured the best-effort forwarding class but you used the default fcoe and no-loss forwarding classes in Junos OS Release 12.2, then when you upgrade to Junos OS Release 12.3, the fcoe and no-loss forwarding classes are still lossless (and the best-effort forwarding classes retains its explicit configuration).

Copyright © 2018, Juniper Networks, Inc.

NOTE: To achieve lossless behavior for the traffic belonging to any forwarding class, you must also use a CNP to enable PFC on the IEEE 802.1p priority mapped to the forwarding class and apply the CNP to the relevant interfaces, and ensure that DCBX exchanges the protocol TLVs for the application with the connected peer.

Related Documentation

- Understanding DCBX Application Protocol TLV Exchange on page 546
- Understanding CoS Flow Control (Ethernet PAUSE and PFC) on page 414
- *Understanding PFC Functionality Across Layer 3 Interfaces*
- Example: Configuring Lossless FCoE Traffic When the Converged Ethernet Network Does Not Use IEEE 802.1p Priority 3 for FCoE Traffic (FCoE Transit Switch) on page 465
- Example: Configuring Two or More Lossless FCoE Priorities on the Same FCoE Transit Switch Interface on page 474
- Example: Configuring Two or More Lossless FCoE IEEE 802.1p Priorities on Different FCoE Transit Switch Interfaces on page 484
- Example: Configuring Lossless IEEE 802.1p Priorities on Ethernet Interfaces for Multiple Applications (FCoE and iSCSI) on page 500
- *Example: Configuring PFC Across Layer 3 Interfaces*
- Configuring CoS PFC (Congestion Notification Profiles) on page 429

Example: Configuring Lossless FCoE Traffic When the Converged Ethernet Network Does Not Use IEEE 802.1p Priority 3 for FCoE Traffic (FCoE Transit Switch)

The default system configuration supports FCoE traffic on priority 3 (IEEE 802.1p code point 011). If the FCoE traffic on your converged Ethernet network uses priority 3, the only user configuration required for lossless transport is to enable PFC on code point 011 on the FCoE ingress interfaces.

However, if your network uses a different priority than 3 for FCoE traffic, you need to configure lossless FCoE transport on that priority. This example shows you how to configure lossless FCoE transport on a converged Ethernet network that uses priority 5 (IEEE 802.1p code point 101) for FCoE traffic instead of using priority 3.

- Requirements on page 466
- Overview on page 466
- Configuration on page 468
- Verification on page 470

Requirements

This example uses the following hardware and software components:

- One switch used as an FCoE transit switch
- Junos OS Release 12.3 or later for the QFX Series

Overview

Although FCoE traffic typically uses IEEE 802.1p priority 3 on converged Ethernet networks, some networks use a different priority for FCoE traffic. Regardless of the priority used, FCoE traffic must receive lossless treatment. Supporting lossless behavior for FCoE traffic when your network does not use priority 3 requires configuring:

- A lossless forwarding class for FCoE traffic.
- A behavior aggregate (BA) classifier to map the FCoE forwarding class to the appropriate IEEE 802.1p priority.
- A congestion notification profile (CNP) to enable PFC on the FCoE code point at the interface ingress and to configure flow control on the interface egress. Flow control on the interface egress enables the interface to respond to PFC messages received from the connected peer and pause the correct IEEE 802.1p priority on the correct output queue.

  NOTE: **Configuring or changing PFC on an interface blocks the entire port until the PFC change is completed. After a PFC change is completed, the port is unblocked and traffic resumes. Blocking the port stops ingress and egress traffic, and causes packet loss on all queues on the port until the port is unblocked.**

- A DCBX application and an application map to support DCBX application TLV exchange for the lossless FCoE traffic on the configured FCoE priority. By default, DCBX is enabled on all Ethernet interfaces, but only on priority 3 (IEEE 802.1p code point 011). To support DCBX application TLV exchange when you are not using the default configuration, you must configure all of the applications and map them to interfaces and priorities.

The priorities specified in the BA classifiers, CNP, and DCBX application map must match, or the configuration does not work. You must specify the same lossless FCoE forwarding class in each configuration and use the same IEEE 802.1p code point (priority) so that the FCoE traffic is properly classified into flows and so that those flows receive lossless treatment.

Topology

This example shows how to configure one lossless FCoE traffic class, map it to a priority other than priority 3, and configure flow control to ensure lossless behavior on the interfaces. This example uses two Ethernet interfaces, xe-0/0/25 and xe-0/0/26. The interfaces connect to a converged Ethernet network that uses IEEE 802.1p priority 5 (code point 101) for FCoE traffic.

 Copyright © 2018, Juniper Networks, Inc.

The configuration on the two interfaces is the same. Both interfaces use the same explicitly configured lossless FCoE forwarding class and the same ingress classifier. Both interfaces enable PFC on priority 5 and enable flow control on the same output queue (which is mapped to the lossless FCoE forwarding class).

Table 98 on page 467 shows the configuration components for this example.

Table 98: Components of the Configuration Topology for FCoE Traffic That Does Not Use Priority 3

Component	Settings
Hardware	One switch
Forwarding class	Name—**fcoe1** Queue mapping—queue **5** Packet drop attribute—**no-loss** NOTE: A lossless forwarding class can be mapped to any output queue. However, because the **fcoe1** forwarding class uses priority 5 in this example, matching that traffic to a forwarding class that uses queue 5 creates a configuration that is logical and easy to map because the priority and the queue are identified by the same number.
BA classifier	Name—**fcoe_p5** FCoE priority mapping—Forwarding class **fcoe1** mapped to code point **101** (IEEE 802.1p priority 5) and a packet loss priority of **low**.
PFC configuration (CNPs)	CNP name—**fcoe_p5_cnp** Input CNP code point—**101** MRU—**2240** bytes Cable length—**100** meters Output CNP code point—**101** Output CNP flow control queue—**5** NOTE: When you apply a CNP with an explicit output queue flow control configuration to an interface, the explicit CNP overwrites the default output CNP. The output queues that are enabled for pause in the default configuration (queues 3 and 4) are not enabled for pause unless they are included in the explicitly configured output CNP.

Copyright © 2018, Juniper Networks, Inc.

Table 98: Components of the Configuration Topology for FCoE Traffic That Does Not Use Priority 3 (continued)

Component	Settings
DCBX application mapping	Application name—**fcoe_p5_app** Application EtherType—**0x8906** Application map name—**fcoe_p5_app_map** Application map code points—**101** NOTE: LLDP and DCBX must be enabled on the interface. By default, LLDP and DCBX are enabled on all Ethernet interfaces.

NOTE: This example does not include scheduling (bandwidth allocation) configuration or the FIP snooping configuration. This example focuses only on the lossless FCoE priority configuration.

QFX10000 switches do not support FIP snooping. For this reason, QFX10000 switches cannot be used as FCoE access transit switches. QFX10000 switches can be used as intermediate or aggregation transit switches in the FCoE path, between an FCoE access transit switch that performs FIP snooping and an FCF.

Configuration

CLI Quick Configuration

To quickly configure a lossless FCoE forwarding class that uses a different priority than IEEE 802.1p priority 3 for FCoE traffic on an FCoE transit switch, copy the following commands, paste them in a text file, remove line breaks, change variables and details to match your network configuration, and then copy and paste the commands into the CLI at the **[edit]** hierarchy level.

```
set class-of-service forwarding-classes class fcoe1 queue-num 5 no-loss
set class-of-service classifiers ieee-802.1 fcoe_p5 forwarding-class fcoe1 loss-priority low
code-points 101
set class-of-service interfaces xe-0/0/25 unit 0 classifiers ieee-802.1 fcoe_p5
set class-of-service interfaces xe-0/0/26 unit 0 classifiers ieee-802.1 fcoe_p5
set class-of-service congestion-notification-profile fcoe_p5_cnp input ieee-802.1 code-point 101
pfc mru 2240
set class-of-service congestion-notification-profile fcoe_p5_cnp input cable-length 100
set class-of-service congestion-notification-profile fcoe_p5_cnp output ieee-802.1 code-point
101 pfc flow-control-queue 5
set class-of-service interfaces xe-0/0/25 congestion-notification-profile fcoe_p5_cnp
set class-of-service interfaces xe-0/0/26 congestion-notification-profile fcoe_p5_cnp
set applications application fcoe_p5_app ether-type 0x8906
set policy-options application-maps fcoe_p5_app_map application fcoe_p5_app code-points 101
set protocols dcbx interface xe-0/0/25 application-map fcoe_p5_app_map
set protocols dcbx interface xe-0/0/26 application-map fcoe_p5_app_map
```


Copyright © 2018, Juniper Networks, Inc.

Configuring A Lossless FCoE Forwarding Class On IEEE 802.1p Priority 5

Step-by-Step Procedure

To configure a lossless forwarding class for FCoE traffic on IEEE 802.1p priority 5 (code point 101), classify FCoE traffic into the lossless forwarding class, configure a congestion notification profile to enable PFC on the FCoE priority and output queue, and configure DCBX application protocol TLV exchange for traffic on the FCoE priority:

1. Configure the lossless forwarding class (named **fcoe1** and mapped to output queue **5**) for FCoE traffic on IEEE 802.1p priority 5:

```
[edit class-of-service]
user@switch# set forwarding-classes class fcoe1 queue-num 5 no-loss
```

2. Configure the ingress classifier (**fcoe_p5**). The classifier maps the FCoE priority (code point **101**) to the lossless FCoE forwarding class **fcoe1**:

```
[edit class-of-service classifiers]
user@switch# set ieee-802.1 fcoe_p5 forwarding-class fcoe1 loss-priority low code-points
101
```

3. Apply the classifier to interfaces **xe-0/0/25** and **xe-0/026**:

```
[edit class-of-service]
user@switch# set interfaces xe-0/0/25 unit 0 classifiers ieee-802.1 fcoe_p5
user@switch# set interfaces xe-0/0/26 unit 0 classifiers ieee-802.1 fcoe_p5
```

4. Configure the CNP. The input stanza enables PFC on the FCoE priority (IEEE 802.1p code point 101), sets the MRU value (2240 bytes), and sets the cable length value (100 meters). The output stanza configures flow control on output queue 5 on the FCoE priority:

```
[edit class-of-service]
user@switch# set congestion-notification-profile fcoe_p5_cnp input ieee-802.1 code-point
101 pfc mru 2240
user@switch# set congestion-notification-profile fcoe_p5_cnp input cable-length 100
user@switch# set congestion-notification-profile fcoe_p5_cnp output ieee-802.1 code-point
101 pfc flow-control-queue 5
```

5. Apply the CNP to the interfaces:

```
[edit class-of-service]
user@switch# set interfaces xe-0/0/25 congestion-notification-profile fcoe_p5_cnp
user@switch# set interfaces xe-0/0/26 congestion-notification-profile fcoe_p5_cnp
```

6. Configure the DCBX application for FCoE to map to the Ethernet interfaces, so that DCBX can exchange application protocol TLVs on the IEEE 802.1p priority 5 instead of on the default priority 3:

```
[edit]
```

```
user@switch# set applications application fcoe_p5_app ether-type 0x8906
```

7. Configure a DCBX application map to map the FCoE application to the correct IEEE 802.1p FCoE priority:

```
[edit]
user@switch# set policy-options application-maps fcoe_p5_app_map application
fcoe_p5_app code-points 101
```

8. Apply the application map to the Ethernet interfaces so that DCBX exchanges FCoE application TLVs on the correct code point:

```
[edit]
user@switch# set protocols dcbx interface xe-0/0/25 application-map fcoe_p5_app_map
user@switch# set protocols dcbx interface xe-0/0/26 application-map fcoe_p5_app_map
```

Verification

To verify the configuration and proper operation of the lossless forwarding class and IEEE 802.1p priority, perform these tasks:

- Verifying the Forwarding Class Configuration on page 470
- Verifying the Behavior Aggregate Classifier Configuration on page 471
- Verifying the PFC Flow Control Configuration (CNP) on page 472
- Verifying the Interface Configuration on page 472
- Verifying the DCBX Application Configuration on page 473
- Verifying the DCBX Application Map Configuration on page 473
- Verifying the DCBX Application Protocol Exchange Interface Configuration on page 474

Verifying the Forwarding Class Configuration

Purpose Verify that the lossless forwarding class **fcoe1** has been created.

 Copyright © 2018, Juniper Networks, Inc.

Action Show the forwarding class configuration by using the operational command **show class-of-service forwarding class**:

```
user@switch# show class-of-service forwarding-class
Forwarding class                      ID      Queue  Policing priority  No-Loss

  best-effort                         0        0         normal        Disabled

  fcoe                                1        3         normal        Enabled

  no-loss                             2        4         normal        Enabled

  network-control                     3        7         normal        Disabled

  fcoe1                               4        5         normal        Enabled

  mcast                               8        8         normal        Disabled
```

Meaning The **show class-of-service forwarding-class** command shows all of the forwarding classes. The command output shows that the **fcoe1** forwarding class is configured on output queue **5** with the no-loss packet drop attribute enabled.

Because we did not explicitly configure the default forwarding classes, they remain in their default state, including the lossless configuration of the **fcoe** and **no-loss** default forwarding classes.

Verifying the Behavior Aggregate Classifier Configuration

Purpose Verify that the classifier maps the forwarding classes to the correct IEEE 802.1p code points (priorities) and packet loss priorities.

Action List the classifier configured to support lossless FCoE transport using the operational mode command **show class-of-service classifier**:

```
user@switch> show class-of-service classifier
Classifier: fcoe_p5, Code point type: ieee-802.1, Index: 63065
  Code point         Forwarding class                    Loss priority
  101                fcoe1                               low
```

Meaning The **show class-of-service classifier** command shows the IEEE 802.1p code points and the loss priorities that are mapped to the forwarding classes in each classifier.

Classifier **fcoe_p5** maps code point **101** (priority 5) to explicitly configured lossless forwarding class **fcoe1** and a packet loss priority of **low**, and all other priorities to the **best-effort** forwarding class with a packet loss priority of **high**.

Verifying the PFC Flow Control Configuration (CNP)

Purpose Verify that PFC is enabled on the correct input priority and that flow control is configured on the correct output queue in the CNP.

Action Display the congestion notification profile using the operational mode command **show class-of-service congestion-notification**:

```
user@switch> show class-of-service congestion-notification
Name: fcoe_p5_cnp, Index: 12137
Type: Input
Cable Length: 100 m
  Priority     PFC          MRU
  000          Disabled
  001          Disabled
  010          Disabled
  011          Disabled
  100          Disabled
  101          Enabled      2240
  110          Disabled
  111          Disabled
Type: Output
  Priority     Flow-Control-Queues
  101
               5
```

Meaning The **show class-of-service congestion-notification** command shows the input and output stanzas of the configured CNPs.

The **fcoe_p5_cnp** CNP input stanza shows that PFC is enabled on code point **101** (priority 5), the MRU is **2240** bytes, and the cable length is **100** meters. The CNP output stanza shows that output flow control is configured on queue **5** for code point **101** (priority 5).

Verifying the Interface Configuration

Purpose Verify that the correct classifier and congestion notification profile are configured on the interfaces.

Action List the ingress interfaces using the operational mode commands **show configuration class-of-service interfaces xe-0/0/25** and **show configuration class-of-service interfaces xe-0/0/26**:

```
user@switch> show configuration class-of-service interfaces xe-0/0/25
congestion-notification-profile fcoe_p5_cnp;
unit 0 {
    classifiers {
        ieee-802.1 fcoe_p5;
    }
}
```

 Copyright © 2018, Juniper Networks, Inc.

```
user@switch> show configuration class-of-service interfaces xe-0/0/26
congestion-notification-profile fcoe_p5_cnp;
unit 0 {
    classifiers {
        ieee-802.1 fcoe_p5;
    }
}
```

Meaning Both the **show configuration class-of-service interfaces xe-0/0/25** command and the **show configuration class-of-service interfaces xe-0/0/26** command show that the congestion notification profile **fcoe_p5_cnp** is configured on each interface, and that the IEEE 802.1p classifier associated with each interface is **fcoe_p5**.

Verifying the DCBX Application Configuration

Purpose Verify that the DCBX application for FCoE is configured.

Action List the DCBX applications by using the configuration mode command **show applications**:

```
user@switch# show applications
application fcoe_p5_app {
    ether-type 0x8906;
```

Meaning The **show applications** configuration mode command shows all of the configured applications. The output shows that the application **fcoe_p5_app** is configured with an EtherType of **0x8906**.

Verifying the DCBX Application Map Configuration

Purpose Verify that the application map is configured.

Action List the application maps by using the configuration mode command **show policy-options application-maps**:

```
user@switch# show policy-options application-maps
fcoe_p5_app_map {
    application fcoe_p5_app code-points 101;
}
```

Meaning The **show policy-options application-maps** configuration mode command lists all of the configured application maps and the applications that belong to each application map. The output shows that application map **fcoe_p5_app_map** consists of the application named **fcoe_p5_app**, which is mapped to IEEE 802.1p code point **101**.

Verifying the DCBX Application Protocol Exchange Interface Configuration

Purpose Verify that the application map is applied to the correct interfaces.

Action List the application maps on each interface using the configuration mode command **show protocols dcbx**:

```
user@switch# show protocols dcbx
interface xe-0/0/25.0 {
    application-map fcoe_p5_app_map;
}
interface xe-0/0/26.0 {
    application-map fcoe_p5_app_map;
}
```

Meaning The **show protocols dcbx** configuration mode command lists the application map association with interfaces. The output shows that interfaces **xe-0/0/25.0** and **xe-0/0/26.0** use application map **fcoe_p5_app_map**.

Related Documentation

- Example: Configuring Two or More Lossless FCoE IEEE 802.1p Priorities on Different FCoE Transit Switch Interfaces on page 484
- Example: Configuring Two or More Lossless FCoE Priorities on the Same FCoE Transit Switch Interface on page 474
- Example: Configuring Lossless IEEE 802.1p Priorities on Ethernet Interfaces for Multiple Applications (FCoE and iSCSI) on page 500
- Example: Configuring DCBX Application Protocol TLV Exchange on page 553
- Configuring CoS PFC (Congestion Notification Profiles) on page 429
- Understanding CoS IEEE 802.1p Priorities for Lossless Traffic Flows on page 446
- Understanding CoS Flow Control (Ethernet PAUSE and PFC) on page 414

Example: Configuring Two or More Lossless FCoE Priorities on the Same FCoE Transit Switch Interface

The default system configuration supports FCoE traffic on priority 3 (IEEE 802.1p code point 011). If the FCoE traffic on your converged Ethernet network uses priority 3, the only user configuration required for lossless transport is to enable PFC on code point 011 on the FCoE ingress interfaces.

However, if your converged Ethernet network uses more than one priority for FCoE traffic, you need to configure lossless transport for each FCoE priority. This example shows you how to configure lossless FCoE transport on a converged Ethernet network that uses

 Copyright © 2018, Juniper Networks, Inc.

both priority 3 (IEEE 802.1p code point 011) and priority 5 (IEEE 802.1p code point 101) for FCoE traffic.

- Requirements on page 475
- Overview on page 475
- Configuration on page 478
- Verification on page 480

Requirements

This example uses the following hardware and software components:

- One switch used as an FCoE transit switch
- Junos OS Release 12.3 or later for the QFX Series

Overview

Some network topologies support FCoE traffic on more than one IEEE 802.1p priority. For example, a converged Ethernet network might include two separate FCoE networks that use different priorities to identify traffic. Interfaces that carry traffic for both FCoE networks need to support lossless FCoE transport on both priorities.

Supporting lossless behavior for two FCoE traffic classes requires configuring:

- At least one lossless forwarding class for FCoE traffic (this example uses the default **fcoe** forwarding class as one of the lossless FCoE forwarding classes, so we need to explicitly configure only one FCoE forwarding class).
- A behavior aggregate (BA) classifier to map the FCoE forwarding classes to the appropriate IEEE 802.1p code points (priorities).
- A congestion notification profile (CNP) to enable PFC on the FCoE code points at the interface ingress and to configure PFC flow control on the interface egress so that the interface can respond to PFC messages received from the connected peer.

  NOTE: **Configuring or changing PFC on an interface blocks the entire port until the PFC change is completed. After a PFC change is completed, the port is unblocked and traffic resumes. Blocking the port stops ingress and egress traffic, and causes packet loss on all queues on the port until the port is unblocked.**

- DCBX applications and an application map to support DCBX application TLV exchange for the lossless FCoE traffic on the configured FCoE priorities. By default, DCBX is enabled on all Ethernet interfaces, but only on priority 3 (IEEE 802.1p code point 011). To support DCBX application TLV exchange when you are not using the default configuration, you must configure all of the applications and map them to interfaces and priorities.

Copyright © 2018, Juniper Networks, Inc.

The priorities specified in the BA classifier, CNP, and DCBX application map must match, or the configuration does not work. You must specify the same lossless FCoE forwarding class in each configuration and use the same IEEE 802.1p code point (priority) so that the FCoE traffic is properly classified into flows and so that those flows receive lossless treatment.

Topology

This example shows how to configure two lossless FCoE traffic classes on an interface, map them to two different priorities, and configure flow control to ensure lossless behavior. This example uses two Ethernet interfaces, xe-0/0/20 and xe-0/0/21, that are connected to the converged Ethernet network. Both interfaces transport FCoE traffic on priorities 3 (011) and 5 (101), and must support lossless transport of that traffic.

Table 99 on page 476 shows the configuration components for this example.

Table 99: Components of the Two Lossless FCoE Priorities on an Interface Configuration Topology

Component	Settings
Hardware	One switch
Forwarding classes	Name—**fcoe1** Queue mapping—queue **5** Packet drop attribute—**no-loss** NOTE: A lossless forwarding class can be mapped to any output queue. However, because the **fcoe1** forwarding class uses priority 5 in this example, matching that traffic to a forwarding class that uses queue 5 creates a configuration that is logical and easy to map because the priority and the queue are identified by the same number. Name—**fcoe** This is the default lossless FCoE forwarding class, so no configuration required. The **fcoe** forwarding class is mapped to priority 3 (IEEE 802.1p code point 011) and to output queue 3 with a packet drop attribute of **no-loss**.
BA classifier	Name—**fcoe_classifier** FCoE priority mapping for forwarding class **fcoe**—mapped to code point **011** (IEEE 802.1p priority 3) and a packet loss priority of **low**. FCoE priority mapping for forwarding class **fcoe1**—mapped to code point **101** (IEEE 802.1p priority 5) and a packet loss priority of **low**.

Copyright © 2018, Juniper Networks, Inc.

Table 99: Components of the Two Lossless FCoE Priorities on an Interface Configuration Topology (continued)

Component	Settings
PFC configuration (CNP)	CNP name—**fcoe_cnp** Input CNP code points—**011** and **101** MRU—2240 bytes Cable length—100 meters Output CNP code points—**011** and **101** Output CNP flow control queues—**3** and **5** NOTE: When you apply a CNP with an explicit output queue flow control configuration to an interface, the explicit CNP overwrites the default output CNP. The output queues that are enabled for PFC pause in the default configuration (queues 3 and 4) are not enabled for PFC pause unless they are included in the explicitly configured output CNP. In this example, because the explicit output CNP overwrites the default output CNP, we must explicitly configure flow control on queue 3.
DCBX application mapping	Application name—**fcoe_app** Application EtherType—**0x8906** Application map name—**fcoe_app_map** Application map code points—**011** and **101** NOTE: LLDP and DCBX must be enabled on the interface. By default, LLDP and DCBX are enabled on all Ethernet interfaces.
Interfaces	Interfaces **xe-0/0/20** and **xe-0/0/21** use the same configuration: • Classifier—**fcoe_classifier** • CNP—**fcoe_cnp** • DCBX application map—**fcoe_app_map**

NOTE: This example does not include scheduling (bandwidth allocation) configuration or the FIP snooping configuration. This examples focuses only on the lossless FCoE priority configuration.

QFX10000 switches do not support FIP snooping. For this reason, QFX10000 switches cannot be used as FCoE access transit switches. QFX10000 switches can be used as intermediate or aggregation transit switches in the FCoE path, between an FCoE access transit switch that performs FIP snooping and an FCF.

Configuration

CLI Quick Configuration

To quickly configure two lossless FCoE forwarding classes that use different priorities on an FCoE transit switch interface, copy the following commands, paste them in a text file, remove line breaks, change variables and details to match your network configuration, and then copy and paste the commands into the CLI at the **[edit]** hierarchy level.

```
set class-of-service forwarding-classes class fcoe1 queue-num 5 no-loss
set class-of-service classifiers ieee-802.1 fcoe_classifier forwarding-class fcoe loss-priority low
code-points 011
set class-of-service classifiers ieee-802.1 fcoe_classifier forwarding-class fcoe1 loss-priority low
code-points 101set class-of-service interfaces xe-0/0/20 unit 0 classifiers ieee-802.1 fcoe_classifier
set class-of-service interfaces xe-0/0/21 unit 0 classifiers ieee-802.1 fcoe_classifier
set class-of-service congestion-notification-profile fcoe_cnp input ieee-802.1 code-point 011 pfc
mru 2240
set class-of-service congestion-notification-profile fcoe_cnp input ieee-802.1 code-point 101 pfc
mru 2240
set class-of-service congestion-notification-profile fcoe_cnp input cable-length 100
set class-of-service congestion-notification-profile fcoe_cnp output ieee-802.1 code-point 011
pfc flow-control-queue 3
set class-of-service congestion-notification-profile fcoe_cnp output ieee-802.1 code-point 101
pfc flow-control-queue 5
set class-of-service interfaces xe-0/0/20 congestion-notification-profile fcoe_cnp
set class-of-service interfaces xe-0/0/21 congestion-notification-profile fcoe_cnp
set applications application fcoe_app ether-type 0x8906
set policy-options application-maps fcoe_app_map application fcoe_app code-points [011 101]
set protocols dcbx interface xe-0/0/20 application-map fcoe_app_map
set protocols dcbx interface xe-0/0/21 application-map fcoe_app_map
```

Step-by-Step Procedure

To configure two lossless forwarding classes for FCoE traffic on the same interface, classify FCoE traffic into the forwarding classes, configure CNPs to enable PFC on the FCoE priorities and output queues, and configure DCBX application protocol TLV exchange for traffic on both FCoE priorities:

1. Configure lossless forwarding class **fcoe1** and map it to output queue **5** for FCoE traffic that uses IEEE 802.1p priority 5:

   ```
   [edit class-of-service]
   user@switch# set forwarding-classes class fcoe1 queue-num 5 no-loss
   ```

   NOTE: This examples uses the default fcoe forwarding class as the other lossless FCoE forwarding class.

2. Configure the ingress classifier. The classifier maps the FCoE priorities (IEEE 802.1p code points **011** and **101**) to lossless FCoE forwarding classes **fcoe** and **fcoe1**, respectively:

   ```
   [edit class-of-service classifiers]
   ```


Copyright © 2018, Juniper Networks, Inc.

```
user@switch# set ieee-802.1 fcoe_classifier forwarding-class fcoe loss-priority low
code-points 011
user@switch# set ieee-802.1 fcoe_classifier forwarding-class fcoe1 loss-priority low
code-points 101
```

3. Apply the classifier to the interfaces:

```
[edit class-of-service]
user@switch# set interfaces xe-0/0/20 unit 0 classifiers ieee-802.1 fcoe_classifier
user@switch# set interfaces xe-0/0/21 unit 0 classifiers ieee-802.1 fcoe_classifier
```

4. Configure the CNP. The input stanza enables PFC on the FCoE priorities (IEEE 802.1p code points 011 and 101), sets the MRU value (2240 bytes), and sets the cable length value (100 meters). The output stanza configures flow control on output queues 3 and 5 on the FCoE priorities:

```
[edit class-of-service]
user@switch# set congestion-notification-profile fcoe_cnp input ieee-802.1 code-point
011 pfc mru 2240
user@switch# set congestion-notification-profile fcoe_cnp input ieee-802.1 code-point
101 pfc mru 2240
user@switch# set congestion-notification-profile fcoe_cnp input cable-length 100
user@switch# set congestion-notification-profile fcoe_cnp output ieee-802.1 code-point
011 pfc flow-control-queue 3
user@switch# set congestion-notification-profile fcoe_cnp output ieee-802.1 code-point
101 pfc flow-control-queue 5
```

5. Apply the CNP to the interfaces:

```
[edit class-of-service]
user@switch# set interfaces xe-0/0/20 congestion-notification-profile fcoe_cnp
user@switch# set interfaces xe-0/0/21 congestion-notification-profile fcoe_cnp
```

6. Configure a DCBX application for FCoE to map to the Ethernet interfaces, so that DCBX can exchange application protocol TLVs on both of the IEEE 802.1p priorities used for FCoE transport:

```
[edit]
user@switch# set applications application fcoe_app ether-type 0x8906
```

7. Configure a DCBX application map to map the FCoE application to the correct IEEE 802.1p FCoE priorities:

```
[edit]
user@switch# set policy-options application-maps fcoe_app_map application fcoe_app
code-points [011 101]
```

8. Apply the application map to the interfaces so that DCBX exchanges FCoE application TLVs on the correct code points:

```
[edit]
user@switch# set protocols dcbx interface xe-0/0/20 application-map fcoe_app_map
user@switch# set protocols dcbx interface xe-0/0/21 application-map fcoe_app_map
```

Verification

To verify the configuration and proper operation of the lossless forwarding classes and IEEE 802.1p priorities, perform these tasks:

- Verifying the Forwarding Class Configuration on page 480
- Verifying the Behavior Aggregate Classifier Configuration on page 481
- Verifying the PFC Flow Control Configuration (CNP) on page 481
- Verifying the Interface Configuration on page 482
- Verifying the DCBX Application Configuration on page 482
- Verifying the DCBX Application Map Configuration on page 483
- Verifying the DCBX Application Protocol Exchange Interface Configuration on page 483

Verifying the Forwarding Class Configuration

Purpose Verify that the lossless forwarding class **fcoe1** has been created.

Action Show the forwarding class configuration by using the operational command **show class-of-service forwarding class**:

```
user@switch# show class-of-service forwarding-class
Forwarding class                      ID      Queue  Policing priority  No-Loss

  best-effort                         0        0        normal        Disabled

  fcoe                                1        3        normal        Enabled

  no-loss                             2        4        normal        Enabled

  network-control                     3        7        normal        Disabled

  fcoe1                               4        5        normal        Enabled

  mcast                               8        8        normal        Disabled
```

Meaning The **show class-of-service forwarding-class** command shows all of the forwarding classes. The command output shows that the **fcoe1** forwarding class is configured on output queue **5** with the no-loss packet drop attribute enabled.

Because we did not explicitly configure the default forwarding classes, they remain in their default state, including the lossless configuration of the **fcoe** and **no-loss** default forwarding classes.

 Copyright © 2018, Juniper Networks, Inc.

Verifying the Behavior Aggregate Classifier Configuration

Purpose Verify that the three classifiers map the forwarding classes to the correct IEEE 802.1p code points (priorities) and packet loss priorities.

Action List the classifiers using the operational mode command **show class-of-service classifier**:

```
user@switch> show class-of-service classifier
```

```
Classifier: fcoe_classifier, Code point type: ieee-802.1, Index: 10964
  Code point         Forwarding class                    Loss priority
  011                fcoe                                low
  101                fcoe1                               low
```

Meaning The **show class-of-service classifier** command shows the IEEE 802.1p code points and the loss priorities that are mapped to the forwarding classes in each classifier.

Classifier **fcoe_classifier** maps code point **011** to default lossless forwarding class **fcoe** and a packet loss priority of **low**, and maps code point **101** to explicitly configured lossless forwarding class **fcoe1** and a packet loss priority of **low**.

Verifying the PFC Flow Control Configuration (CNP)

Purpose Verify that PFC is enabled on the correct input priorities and that flow control is configured on the correct output queues and priorities.

Action List the CNPs using the operational mode command **show class-of-service congestion-notification**:

```
user@switch> show class-of-service congestion-notification
```

```
Name: fcoe_cnp, Index: 46504
Type: Input
Cable Length: 100 m
  Priority     PFC          MRU
  000          Disabled
  001          Disabled
  010          Disabled
  011          Enabled      2240
  100          Disabled
  101          Enabled      2240
  110          Disabled
  111          Disabled
Type: Output
  Priority     Flow-Control-Queues
  011
               3
  101
               5
```

Meaning The **show class-of-service congestion-notification** command shows the input and output stanzas of the CNP.

The CNP **fcoe_cnp** input stanza shows that PFC is enabled on code points **011** and **101**, the MRU is **2240** bytes on both priorities, and the interface cable length is **100** meters. The CNP output stanza shows that output flow control is configured on queues **3** and **5** for code points **011** and **101**, respectively.

Verifying the Interface Configuration

Purpose Verify that the classifier and congestion notification profile are configured on the interfaces. Both interfaces should show the same configuration.

Action List the ingress interfaces using the operational mode commands **show configuration class-of-service interfaces xe-0/0/20** and **show configuration class-of-service interfaces xe-0/0/21**:

```
user@switch> show configuration class-of-service interfaces xe-0/0/20
```

```
ccongestion-notification-profile fcoe_cnp;
unit 0 {
    classifiers {
        ieee-802.1 fcoe_classifier;
    }
}
```

```
user@switch> show configuration class-of-service interfaces xe-0/0/21
```

```
congestion-notification-profile fcoe_cnp;
unit 0 {
    classifiers {
        ieee-802.1 fcoe_classifier;
    }
}
```

Meaning The **show configuration class-of-service interfaces xe-0/0/20** command shows that the congestion notification profile **fcoe_cnp** is configured on the interface, and that the IEEE 802.1p classifier associated with the interface is **fcoe_classifier**.

The **show configuration class-of-service interfaces xe-0/0/21** command shows that the congestion notification profile **fcoe_cnp** is configured on the interface, and that the IEEE 802.1p classifier associated with the interface is **fcoe_classifier**.

Verifying the DCBX Application Configuration

Purpose Verify that the DCBX application for FCoE is configured.

 Copyright © 2018, Juniper Networks, Inc.

Action List the DCBX applications by using the configuration mode command **show applications**:

```
user@switch# show applications
```

```
application fcoe_app {
    ether-type 0x8906;
```

Meaning The **show applications** configuration mode command shows all of the configured applications. The output shows that the application **fcoe_app** is configured with an EtherType of **0x8906**.

Verifying the DCBX Application Map Configuration

Purpose Verify that the application map is configured.

Action List the application maps by using the configuration mode command **show policy-options application-maps**:

```
user@switch# show policy-options application-maps
```

```
fcoe_app_map {
    application fcoe_app code-points [011 101];
}
```

Meaning The **show policy-options application-maps** configuration mode command lists all of the configured application maps and the applications that belong to each application map. The output shows that application map **fcoe_app_map** consists of the application named **fcoe_app**, which is mapped to IEEE 802.1p code points **011** and **101** (priorities 3 and 5, respectively).

Verifying the DCBX Application Protocol Exchange Interface Configuration

Purpose Verify that the application map is applied to the interfaces.

Action List the application maps on each interface using the configuration mode command **show protocols dcbx**:

```
user@switch# show protocols dcbx
```

```
interface xe-0/0/20.0 {
    application-map fcoe_app_map;
}
interface xe-0/0/21.0 {
    application-map fcoe_app_map;
}
```

Meaning The **show protocols dcbx** configuration mode command lists the application map association with interfaces. The output shows that interfaces **xe-0/0/20.0** and **xe-0/0/21.0** use application map **fcoe_app_map**.

Related Documentation

- Example: Configuring Two or More Lossless FCoE IEEE 802.1p Priorities on Different FCoE Transit Switch Interfaces on page 484
- Example: Configuring Lossless FCoE Traffic When the Converged Ethernet Network Does Not Use IEEE 802.1p Priority 3 for FCoE Traffic (FCoE Transit Switch) on page 465
- Example: Configuring Lossless IEEE 802.1p Priorities on Ethernet Interfaces for Multiple Applications (FCoE and iSCSI) on page 500
- Example: Configuring DCBX Application Protocol TLV Exchange on page 553
- Configuring CoS PFC (Congestion Notification Profiles) on page 429
- Understanding CoS IEEE 802.1p Priorities for Lossless Traffic Flows on page 446
- Understanding CoS Flow Control (Ethernet PAUSE and PFC) on page 414

Example: Configuring Two or More Lossless FCoE IEEE 802.1p Priorities on Different FCoE Transit Switch Interfaces

Although the default configuration provides two lossless forwarding classes mapped to two different IEEE 802.1p priorities (code points), you can explicitly configure up to six lossless forwarding classes and map them to different priorities. You can support up to six different types of lossless traffic, and you can support the same type of traffic if it uses different priorities in different parts of your converged network.

This example shows you how to configure two lossless forwarding classes for FCoE traffic and map them to two different priorities on an FCoE transit switch.

- Requirements on page 484
- Overview on page 484
- Configuration on page 489
- Verification on page 493

Requirements

This example uses the following hardware and software components:

- One switch used as an FCoE transit switch
- Junos OS Release 12.3 or later for the QFX Series

Overview

Some network topologies support FCoE traffic on more than one IEEE 802.1p priority. For example, when the switch acts as a transit switch, it could be connected to two QFX3500 switches in FCoE-FC gateway mode. Each of the gateway switches could

 Copyright © 2018, Juniper Networks, Inc.

connect a set of FCoE clients to a different SAN, and each set of FCoE clients could use a different priority for FCoE traffic to avoid fate sharing and maintain separation of the two FCoE networks. In this case, you need to configure two forwarding classes for FCoE traffic, each mapped to a different output queue and a different priority.

Supporting lossless behavior for two FCoE traffic classes requires configuring:

- At least one lossless forwarding class for FCoE traffic (this example uses the default **fcoe** forwarding class as one of the two lossless FCoE forwarding classes, so we need to explicitly configure only one FCoE forwarding class)
- Behavior aggregate (BA) classifiers to map the FCoE forwarding classes to the appropriate IEEE 802.1p code points (priorities) on each interface
- Congestion notification profiles (CNPs) for each interface to enable PFC on the FCoE code points at the interface ingress and to configure PFC flow control on the interface egress so that the interface can respond to PFC messages received from the connected peer

  NOTE: **Configuring or changing PFC on an interface blocks the entire port until the PFC change is completed. After a PFC change is completed, the port is unblocked and traffic resumes. Blocking the port stops ingress and egress traffic, and causes packet loss on all queues on the port until the port is unblocked.**

- DCBX applications and an application map to support DCBX application TLV exchange for the lossless FCoE traffic on the configured FCoE priorities. By default, DCBX is enabled on all Ethernet interfaces, but only on priority 3 (IEEE 802.1p code point 011). To support DCBX application TLV exchange when you are not using the default configuration, you must configure all of the applications and map them to interfaces and priorities.

The priorities specified in the BA classifiers, CNPs, and DCBX application map must match, or the configuration does not work. You must specify the same lossless FCoE forwarding class in each configuration and use the same IEEE 802.1p code point (priority) so that the FCoE traffic is properly classified into flows and so that those flows receive lossless treatment.

Topology

This example shows how to configure two lossless FCoE traffic classes, map them to two different priorities, and configure flow control to ensure lossless behavior for those priorities on the interfaces. This example uses three Ethernet interfaces, xe-0/0/20, xe-0/0/21, and xe-0/0/22:

- Interface xe-0/0/20 connects to an FCoE-FC gateway that connects to Fibre Channel (FC) SAN 1. FCoE traffic to and from FC SAN 1 uses the default **fcoe** forwarding class and the default mapping to priority 3 (IEEE 802.1p code point 011) and output queue 3.

- Interface xe-0/0/21 connects to another FCoE-FC gateway that connects to Fibre Channel (FC) SAN 2. FCoE traffic to and from FC SAN-2 uses an explicitly configured FCoE forwarding class that is mapped to priority 5 (code point 101) and output queue 5.
- Interface xe-0/0/22 connects to FCoE devices on the converged Ethernet network and handles traffic destined for FC SAN 1 and FC SAN 2. Interface xe-0/0/22 must properly handle lossless FCoE traffic of both priorities (both FCoE forwarding classes), including pausing the traffic on ingress or egress as required.

Figure 23 on page 486 shows the topology for this example, and Table 100 on page 486 shows the configuration components for this example.

Figure 23: Topology of the Two Lossless FCoE Priorities Example

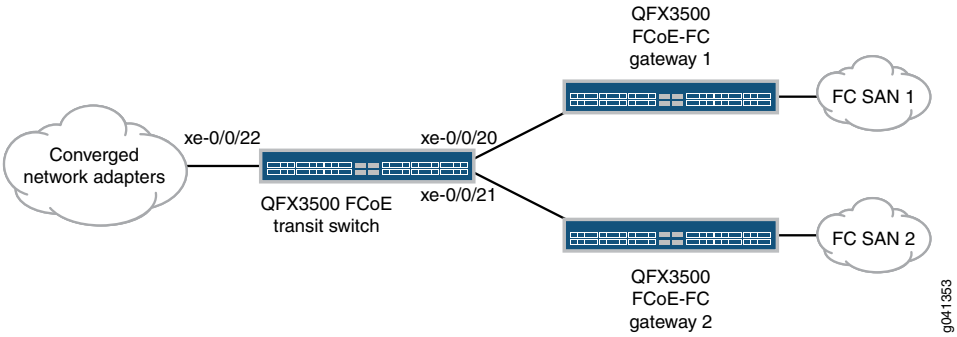

Table 100: Components of the Two Lossless FCoE Priorities Configuration Topology

Component	Settings
Hardware	One switch
Forwarding classes	Name—**fcoe1** Queue mapping—queue **5** Packet drop attribute—**no-loss** NOTE: A lossless forwarding class can be mapped to any output queue. However, because the **fcoe1** forwarding class uses priority 5 in this example, matching that traffic to a forwarding class that uses queue 5 creates a configuration that is logical and easy to map because the priority and the queue are identified by the same number. Name—**fcoe** This is the default lossless FCoE forwarding class, so no configuration required. The **fcoe** forwarding class is mapped to priority 3 (IEEE 802.1p code point 011) and to output queue 3 with a packet drop attribute of **no-loss**

Copyright © 2018, Juniper Networks, Inc.

Table 100: Components of the Two Lossless FCoE Priorities Configuration Topology (continued)

Component	Settings
BA classifiers	Each interface requires a different classifier because each interface handles a different subset of FCoE traffic. • Interface xe-0/0/20 classifier: Name—**fcoe_p3** FCoE priority mapping—Forwarding class **fcoe** mapped to code point **011** (IEEE 802.1p priority 3) and a packet loss priority of **low**. • Interface xe-0/0/21 classifier: Name—**fcoe_p5** FCoE priority mapping—Forwarding class **fcoe1** mapped to code point **101** (IEEE 802.1p priority 5) and a packet loss priority of **low**. • Interface xe-0/0/22 classifier: Name—**fcoe_p3_p5** FCoE priority mapping—Forwarding class **fcoe1** mapped to code point **101** and a packet loss priority of **low**, and forwarding class **fcoe** mapped to code point **011** and a packet loss priority of **low**.

Table 100: Components of the Two Lossless FCoE Priorities Configuration Topology (continued)

Component	Settings
PFC configuration (CNPs)	Each interface requires a different CNP because each interface handles a different subset of FCoE traffic and must pause that traffic on different priorities. • Interface xe-0/0/20 CNP: CNP name—**fcoe_p3_cnp** Input CNP code point—**011** MRU—2240 bytes Cable length—100 meters NOTE: Because interface xe-0/0/20 uses the default FCoE configuration, output queue 3 is paused by default and you do not need to configure the output stanza of the CNP. • Interface xe-0/0/21 CNP: CNP name—**fcoe_p5_cnp** Input CNP code point—**101** MRU—**2240** bytes Cable length—**150** meters Output CNP code point—**101** Output CNP flow control queue—**5** • Interface xe-0/0/22 CNP: CNP name—**fcoe_p3_p5_cnp** Input CNP code points—**011** and **101** MRU—**2240** bytes (both priorities) Cable length—**100** meters Output CNP code points—**011** (for queue **3**) and **101** (for queue **5**) Output CNP flow control queues—**3** for priority 3 (code point 011) and **5** for priority 5 (code point 101) NOTE: When you apply a CNP with an explicit output queue flow control configuration to an interface, the explicit CNP overwrites the default output CNP. The output queues that are enabled for pause in the default configuration (queues 3 and 4) are not enabled for pause unless they are included in the explicitly configured output CNP.

Copyright © 2018, Juniper Networks, Inc.

Table 100: Components of the Two Lossless FCoE Priorities Configuration Topology (continued)

Component	Settings
DCBX application mapping	Interface xe-0/0/20 does not need an application map because DCBX exchanges application protocol TLVs only on the default FCoE priority (priority 3). Interface xe-0/0/21 requires an application map that enables DCBX application protocol TLV exchange on priority 5 (code point 101) for FCoE traffic. Interface xe-0/0/22 requires an application map that enables DCBX application protocol TLV exchange both on priority 3 (code point 011) and on priority 5 (code point 101) for FCoE traffic. • Interface xe-0/0/21 DCBX application mapping: Application name—**fcoe_p5_app** Application ether-type—**0x8906** Application map name—**fcoe_p5_app_map** Application map code points—**101** • Interface xe-0/0/22 DCBX application mapping: Application name—**fcoe_all_app** Application ether-type—**0x8906** Application map name—**fcoe_all_app_map** Application map code points—**011** and **101** NOTE: LLDP and DCBX must be enabled on the interface. By default, LLDP and DCBX are enabled on all Ethernet interfaces.

NOTE: This example does not include scheduling (bandwidth allocation) configuration or the FIP snooping configuration. This examples focuses only on the lossless FCoE priority configuration.

QFX10000 switches do not support FIP snooping. For this reason, QFX10000 switches cannot be used as FCoE access transit switches. QFX10000 switches can be used as intermediate or aggregation transit switches in the FCoE path, between an FCoE access transit switch that performs FIP snooping and an FCF.

Configuration

CLI Quick Configuration

To quickly configure two lossless FCoE forwarding classes that use different priorities on an FCoE transit switch, copy the following commands, paste them in a text file, remove line breaks, change variables and details to match your network configuration, and then copy and paste the commands into the CLI at the **[edit]** hierarchy level.

```
set class-of-service forwarding-classes class fcoe1 queue-num 5 no-loss
set class-of-service classifiers ieee-802.1 fcoe_p3 forwarding-class fcoe loss-priority low
code-points 011
set class-of-service classifiers ieee-802.1 fcoe_p5 forwarding-class fcoe1 loss-priority low
code-points 101
```

```
set class-of-service classifiers ieee-802.1 fcoe_p3_p5 forwarding-class fcoe loss-priority low
code-points 011
set class-of-service classifiers ieee-802.1 fcoe_p3_p5 forwarding-class fcoe1 loss-priority low
code-points 101
set class-of-service interfaces xe-0/0/20 unit 0 classifiers ieee-802.1 fcoe_p3
set class-of-service interfaces xe-0/0/21 unit 0 classifiers ieee-802.1 fcoe_p5
set class-of-service interfaces xe-0/0/22 unit 0 classifiers ieee-802.1 fcoe_p3_p5
set class-of-service congestion-notification-profile fcoe_p3_cnp input ieee-802.1 code-point 011
pfc mru 2240
set class-of-service congestion-notification-profile fcoe_p3_cnp input cable-length 100
set class-of-service congestion-notification-profile fcoe_p5_cnp input ieee-802.1 code-point 101
pfc mru 2240
set class-of-service congestion-notification-profile fcoe_p5_cnp input cable-length 150
set class-of-service congestion-notification-profile fcoe_p5_cnp output ieee-802.1 code-point
101 pfc flow-control-queue 5
set class-of-service congestion-notification-profile fcoe_p3_p5_cnp input ieee-802.1 code-point
011 pfc mru 2240
set class-of-service congestion-notification-profile fcoe_p3_p5_cnp input ieee-802.1 code-point
101 pfc mru 2240
set class-of-service congestion-notification-profile fcoe_p3_p5_cnp input cable-length 100
set class-of-service congestion-notification-profile fcoe_p3_p5_cnp output ieee-802.1 code-point
011 pfc flow-control-queue 3
set class-of-service congestion-notification-profile fcoe_p3_p5_cnp output ieee-802.1 code-point
101 pfc flow-control-queue 5
set class-of-service interfaces xe-0/0/20 congestion-notification-profile fcoe_p3_cnp
set class-of-service interfaces xe-0/0/21 congestion-notification-profile fcoe_p5_cnp
set class-of-service interfaces xe-0/0/22 congestion-notification-profile fcoe_p3_p5_cnp
set applications application fcoe_p5_app ether-type 0x8906
set applications application fcoe_all_app ether-type 0x8906
set policy-options application-maps fcoe_p5_app_map application fcoe_p5_app code-points 101
set policy-options application-maps fcoe_all_app_map application fcoe_all_app code-points [011
101]
set protocols dcbx interface xe-0/0/21 application-map fcoe_p5_app_map
set protocols dcbx interface xe-0/0/22 application-map fcoe_all_app_map
```

Step-by-Step Procedure

To configure two lossless forwarding classes for FCoE traffic on different interfaces, classify FCoE traffic into the forwarding classes, configure congestion notification profiles to enable PFC on the FCoE priorities and output queues, and configure DCBX application protocol TLV exchange for traffic on both FCoE priorities:

1. Configure lossless forwarding class **fcoe1** and map it to output queue **5** for FCoE traffic that uses IEEE 802.1p priority 5:

   ```
   [edit class-of-service]
   user@switch# set forwarding-classes class fcoe1 queue-num 5 no-loss
   ```

   NOTE: This examples uses the default fcoe forwarding class as the other lossless FCoE forwarding class.

Copyright © 2018, Juniper Networks, Inc.

2. Configure the ingress classifier (**fcoe_p3**) for interface **xe-0/0/20**. The classifier maps the FCoE priority (IEEE 802.1p code point **011**) to lossless FCoE forwarding class **fcoe**:

```
[edit class-of-service classifiers]
user@switch# set ieee-802.1 fcoe_p3 forwarding-class fcoe loss-priority low code-points
011
```

3. Configure the ingress classifier (**fcoe_p5**) for interface **xe-0/0/21**. The classifier maps the FCoE priority (IEEE 802.1p code point **101**) to lossless FCoE forwarding class **fcoe1**:

```
[edit class-of-service classifiers]
user@switch# set ieee-802.1 fcoe_p5 forwarding-class fcoe1 loss-priority low code-points
101
```

4. Configure the ingress classifier (**fcoe_p3_p5**) for interface **xe-0/0/22**. The classifier maps the two FCoE priorities (IEEE 802.1p code points **011** and **101**) to the two lossless FCoE forwarding classes **fcoe** and **fcoe1**, respectively:

```
[edit class-of-service classifiers]
user@switch# set ieee-802.1 fcoe_p3_p5 forwarding-class fcoe loss-priority low code-points
011
user@switch# set ieee-802.1 fcoe_p3_p5 forwarding-class fcoe1 loss-priority low code-points
101
```

5. Apply each classifier to the appropriate interface:

```
[edit class-of-service]
user@switch# set interfaces xe-0/0/20 unit 0 classifiers ieee-802.1 fcoe_p3
user@switch# set interfaces xe-0/0/21 unit 0 classifiers ieee-802.1 fcoe_p5
user@switch# set interfaces xe-0/0/22 unit 0 classifiers ieee-802.1 fcoe_p3_p5
```

6. Configure the CNP input stanza for interface xe-0/0/20 to enable PFC on the FCoE priority (IEEE 802.1p code point 011), set the MRU value (2240 bytes), and set the cable length value (100 meters). No output stanza is needed because queue 3 is paused by default on priority 3, and we are not explicitly configuring output queue flow control for any other queues.

```
[edit class-of-service]
user@switch# set congestion-notification-profile fcoe_p3_cnp input ieee-802.1 code-point
011 pfc mru 2240
user@switch# set congestion-notification-profile fcoe_p3_cnp input cable-length 100
```

7. Configure the CNP for interface xe-0/0/21. The input stanza enables PFC on the FCoE priority (IEEE 802.1p code point 101), sets the MRU value (2240 bytes), and sets the cable length value (150 meters). The output stanza configures flow control on output queue 5 on the FCoE priority:

```
[edit class-of-service]
user@switch# set congestion-notification-profile fcoe_p5_cnp input ieee-802.1 code-point
101 pfc mru 2240
user@switch# set congestion-notification-profile fcoe_p5_cnp input cable-length 150
user@switch# set congestion-notification-profile fcoe_p5_cnp output ieee-802.1 code-point
101 pfc flow-control-queue 5
```

8. Configure the CNP for interface xe-0/0/22. The input stanza enables PFC on the FCoE priorities (IEEE 802.1p code points 011 and 101), sets the MRU value (2240 bytes), and sets the cable length value (100 meters). The output stanza configures flow control on output queues 3 and 5 on the FCoE priorities:

```
[edit class-of-service]
user@switch# set congestion-notification-profile fcoe_p3_p5_cnp input ieee-802.1
code-point 011 pfc mru 2240
user@switch# set congestion-notification-profile fcoe_p3_p5_cnp input ieee-802.1
code-point 101 pfc mru 2240
user@switch# set congestion-notification-profile fcoe_p3_p5_cnp input cable-length 100
user@switch# set congestion-notification-profile fcoe_p3_p5_cnp output ieee-802.1
code-point 011 pfc flow-control-queue 3
user@switch# set congestion-notification-profile fcoe_p3_p5_cnp output ieee-802.1
code-point 101 pfc flow-control-queue 5
```

9. Apply each CNP to the appropriate interface:

```
[edit class-of-service]
user@switch# set interfaces xe-0/0/20 congestion-notification-profile fcoe_p3_cnp
user@switch# set interfaces xe-0/0/21 congestion-notification-profile fcoe_p5_cnp
user@switch# set interfaces xe-0/0/22 congestion-notification-profile fcoe_p3_p5_cnp
```

10. Configure the DCBX FCoE application and application map to apply to interface xe-0/0/21. Interface xe-0/0/21 uses priority 5 (IEEE 802.1p code point 101) for FCoE traffic, which requires DCBX to exchange FCoE application protocol TLVs on priority 5 on interface xe-0/0/21. Configure an application named **fcoe_p5_app** for FCoE traffic (EtherType **0x8906**) and configure an application map named **fcoe_p5_app_map** to map the application to code point 101:

```
[edit]
user@switch# set applications application fcoe_p5_app ether-type 0x8906
user@switch# set policy-options application-maps fcoe_p5_app_map application
fcoe_p5_app code-points 101
```

NOTE: Interface xe-0/0/20 uses the default FCoE configuration (priority 3). DCBX exchanges protocol TLVs for the FCoE application by default, so you do not need to configure DCBX explicitly on interface xe-0/0/20.

11. Configure the DCBX FCoE application and application map to apply to interface xe-0/0/22. Interface xe-0/0/22 uses both priority 3 (IEEE 802.1p code point 011)

 Copyright © 2018, Juniper Networks, Inc.

and priority 5 for FCoE traffic, which requires DCBX to exchange FCoE application protocol TLVs on both priority 3 and priority 5. Configure an application named **fcoe_all_app** for FCoE traffic (EtherType **0x8906**) and configure an application map named **fcoe_all_app_map** to map the application to code points 011 and 101:

```
[edit]
user@switch# set applications application fcoe_all_app ether-type 0x8906
user@switch# set policy-options application-maps fcoe_all_app_map application
fcoe_all_app code-points [011 101]
```

12. Apply the application maps to the interfaces xe-0/0/21 and xe-0/0/22 so that DCBX exchanges FCoE application TLVs on the correct code points on each interface:

```
[edit]
user@switch# set protocols dcbx interface xe-0/0/21 application-map fcoe_p5_app_map
user@switch# set protocols dcbx interface xe-0/0/22 application-map fcoe_all_app_map
```

Verification

To verify the configuration and proper operation of the lossless forwarding classes and IEEE 802.1p priorities, perform these tasks:

- Verifying the Forwarding Class Configuration on page 493
- Verifying the Behavior Aggregate Classifier Configuration on page 494
- Verifying the PFC Flow Control Configuration (CNP) on page 495
- Verifying the Interface Configuration on page 497
- Verifying the DCBX Application Configuration on page 498
- Verifying the DCBX Application Map Configuration on page 498
- Verifying the DCBX Application Protocol Exchange Interface Configuration on page 499

Verifying the Forwarding Class Configuration

Purpose Verify that the lossless forwarding class **fcoe1** has been created.

Action Show the forwarding class configuration by using the operational command **show class-of-service forwarding class**:

```
user@switch# show class-of-service forwarding-class
Forwarding class                      ID      Queue  Policing priority  No-Loss

  best-effort                         0        0         normal        Disabled

  fcoe                                1        3         normal        Enabled

  no-loss                             2        4         normal        Enabled

  network-control                     3        7         normal        Disabled

  fcoe1                               4        5         normal        Enabled

  mcast                               8        8         normal        Disabled
```

Meaning The **show class-of-service forwarding-class** command shows all of the forwarding classes. The command output shows that the **fcoe1** forwarding class is configured on output queue **5** with the no-loss packet drop attribute enabled.

Because we did not explicitly configure the default forwarding classes, they remain in their default state, including the lossless configuration of the **fcoe** and **no-loss** default forwarding classes.

Verifying the Behavior Aggregate Classifier Configuration

Purpose Verify that the three classifiers map the forwarding classes to the correct IEEE 802.1p code points (priorities) and packet loss priorities.

Action List the classifiers configured to support lossless FCoE transport using the operational mode command **show class-of-service classifier**:

```
user@switch> show class-of-service classifier
Classifier: fcoe_p3, Code point type: ieee-802.1, Index: 13913
  Code point         Forwarding class                    Loss priority
  011                fcoe                                low

Classifier: fcoe_p5, Code point type: ieee-802.1, Index: 63065
  Code point         Forwarding class                    Loss priority
  101                fcoe1                               low

Classifier: fcoe_p3_p5, Code point type: ieee-802.1, Index: 10964
  Code point         Forwarding class                    Loss priority
  011                fcoe                                low
  101                fcoe1                               low
```

 Copyright © 2018, Juniper Networks, Inc.

Meaning The **show class-of-service classifier** command shows the IEEE 802.1p code points and the loss priorities that are mapped to the forwarding classes in each classifier. The command output shows that there are three classifiers, **fcoe_p3**, **fcoe_p5**, and **fcoe_p3_p5**.

Classifier **fcoe_p3** maps code point **011** (priority 3) to default lossless forwarding class **fcoe** and a packet loss priority of **low**, and all other priorities to the **best-effort** forwarding class with a packet loss priority of **high**.

Classifier **fcoe_p5** maps code point **101** (priority 5) to explicitly configured lossless forwarding class **fcoe1** and a packet loss priority of **low**, and all other priorities to the **best-effort** forwarding class with a packet loss priority of **high**.

Classifier **fcoe_p3_p5** maps code point **011** to default lossless forwarding class **fcoe** and a packet loss priority of **low**, and maps code point **101** to explicitly configured lossless forwarding class **fcoe1** and a packet loss priority of **low**. The classifier maps all other priorities to the **best-effort** forwarding class with a packet loss priority of **high**.

Verifying the PFC Flow Control Configuration (CNP)

Purpose Verify that PFC is enabled on the correct input priorities and that flow control is configured on the correct output queues and priorities in each CNP.

Action List the congestion notification profiles using the operational mode command **show class-of-service congestion-notification**:

```
user@switch> show class-of-service congestion-notification
Name: fcoe_p3_cnp, Index: 12037
Type: Input
Cable Length: 100 m
  Priority     PFC          MRU
  000          Disabled
  001          Disabled
  010          Disabled
  011          Enabled      2240
  100          Disabled
  101          Disabled
  110          Disabled
  111          Disabled
Type: Output
  Priority     Flow-Control-Queues
  000
               0
  001
               1
  010
               2
  011
               3
  100
               4
  101
               5
  110
               6
```

```
  111
                7

Name: fcoe_p3_p5_cnp, Index: 46484
Type: Input
Cable Length: 100 m
  Priority     PFC          MRU
  000          Disabled
  001          Disabled
  010          Disabled
  011          Enabled      2240
  100          Disabled
  101          Enabled      2240
  110          Disabled
  111          Disabled
Type: Output
  Priority     Flow-Control-Queues
  011
                3
  101
                5

Name: fcoe_p5_cnp, Index: 12133
Type: Input
Cable Length: 150 m
  Priority     PFC          MRU
  000          Disabled
  001          Disabled
  010          Disabled
  011          Disabled
  100          Disabled
  101          Enabled      2240
  110          Disabled
  111          Disabled
Type: Output
  Priority     Flow-Control-Queues
  101
                5
```

Meaning The **show class-of-service congestion-notification** command shows the input and output stanzas of the three CNPs. For CNP **fcoe_p3_cnp**, the input stanza shows that PFC is enabled on IEEE 802.1p code point **011** (priority 3), the MRU is **2240** bytes, and the cable length is **100** meters. The CNP output stanza shows the default mapping of priorities to output queues.

NOTE: By default, only queues 3 and 4 are enabled to respond to pause messages from the connected peer. For queue 3 to respond to pause messages, priority 3 (code point 011) must be enabled for PFC in the input stanza. For queue 4 to respond to pause messages, priority 4 (code point 100) must be enabled for PFC in the input stanza. In this example, only queue 3 responds to pause messages from the connected peer on interfaces that use CNP **fcoe_p3_cnp**, because the input stanza enables PFC priority 3 only.

 Copyright © 2018, Juniper Networks, Inc.

For CNP **fcoe_p3_p5_cnp**, the input stanza shows that PFC is enabled on code points **011** and **101**, the MRU is **2240** bytes on both priorities, and the cable length is **100** meters. The CNP output stanza shows that output flow control is configured on queues **3** and **5** for code points **011** and **101**, respectively.

For CNP **fcoe_p5_cnp**, the input stanza shows that PFC is enabled on code point **101** (priority 5), the MRU is **2240** bytes, and the cable length is **150** meters. The CNP output stanza shows that output flow control is configured on queue **5** for code point **101** (priority 5).

Verifying the Interface Configuration

Purpose Verify that the correct classifiers and congestion notification profiles are configured on the correct interfaces.

Action List the ingress interfaces using the operational mode commands **show configuration class-of-service interfaces xe-0/0/20**, **show configuration class-of-service interfaces xe-0/0/21**, and **show configuration class-of-service interfaces xe-0/0/22**:

```
user@switch> show configuration class-of-service interfaces xe-0/0/20
ccongestion-notification-profile fcoe_p3_cnp;
unit 0 {
    classifiers {
        ieee-802.1 fcoe_p3;
    }
}
```

```
user@switch> show configuration class-of-service interfaces xe-0/0/21
congestion-notification-profile fcoe_p5_cnp;
unit 0 {
    classifiers {
        ieee-802.1 fcoe_p5;
    }
}
```

```
user@switch> show configuration class-of-service interfaces xe-0/0/22
congestion-notification-profile fcoe_p3_p5_cnp;
unit 0 {
    classifiers {
        ieee-802.1 fcoe_p3_p5;
    }
}
```

Meaning The **show configuration class-of-service interfaces xe-0/0/20** command shows that the congestion notification profile **fcoe_p3_cnp** is configured on the interface, and that the IEEE 802.1p classifier associated with the interface is **fcoe_p3**.

Copyright © 2018, Juniper Networks, Inc.

The **show configuration class-of-service interfaces xe-0/0/21** command shows that the congestion notification profile **fcoe_p5_cnp** is configured on the interface, and that the IEEE 802.1p classifier associated with the interface is **fcoe_p5**.

The **show configuration class-of-service interfaces xe-0/0/22** command shows that the congestion notification profile **fcoe_p3_p5_cnp** is configured on the interface, and that the IEEE 802.1p classifier associated with the interface is **fcoe_p3_p5**.

Verifying the DCBX Application Configuration

Purpose Verify that the two DCBX applications for FCoE are configured.

Action List the DCBX applications by using the configuration mode command **show applications**:

```
user@switch# show applications
```

```
application fcoe_all_app {
    ether-type 0x8906;

application fcoe_p5_app {
    ether-type 0x8906;
```

Meaning The **show applications** configuration mode command shows all of the configured applications. The output shows that the application **fcoe_all_app** is configured with an EtherType of **0x8906** (the correct EtherType for FCoE traffic) and that the application **fcoe_p5_app** is also configured with an EtherType of **0x8906**.

Verifying the DCBX Application Map Configuration

Purpose Verify that the application maps are configured.

Action List the application maps by using the configuration mode command **show policy-options application-maps**:

```
user@switch# show policy-options application-maps
```

```
fcoe_all_app_map {
    application fcoe_all_app code-points [011 101];
}
fcoe_p5_app_map {
    application fcoe_p5_app code-points 101;
}
```

Meaning The **show policy-options application-maps** configuration mode command lists all of the configured application maps and the applications that belong to each application map. The output shows that there are two application maps.

 Copyright © 2018, Juniper Networks, Inc.

Application map **fcoe_all_app_map** consists of the application named **fcoe_all_app** mapped to IEEE 802.1p code points **011** (priority 3) and **101** (priority 5).

Application map **fcoe_p5_app_map** consists of the application named **fcoe_p5_app** mapped to IEEE 802.1p code point **101** (priority 5).

Verifying the DCBX Application Protocol Exchange Interface Configuration

Purpose Verify that the application maps are applied to the correct interfaces.

Action List the application maps on each interface using the configuration mode command **show protocols dcbx**:

```
user@switch# show protocols dcbx
interface xe-0/0/21.0 {
    application-map fcoe_p5_app_map;
}
interface xe-0/0/22.0 {
    application-map fcoe_all_app_map;
}
```

Meaning The **show protocols dcbx** configuration mode command lists the application map association with interfaces. The output shows that interface **xe-0/0/21.0** uses application map **fcoe_p5_app_map** and interface **xe-0/0/22.0** uses application map **fcoe_all_app_map**.

NOTE: Because interface xe-0/0/20 uses the default lossless FCoE configuration, you do not configure application mapping to interface xe-0/0/20. The default configuration automatically exchanges application protocol TLVs for the default FCoE configuration on priority 3 (IEEE 802.1p code point 011).

Related Documentation

- Example: Configuring Two or More Lossless FCoE Priorities on the Same FCoE Transit Switch Interface on page 474
- Example: Configuring Lossless FCoE Traffic When the Converged Ethernet Network Does Not Use IEEE 802.1p Priority 3 for FCoE Traffic (FCoE Transit Switch) on page 465
- Example: Configuring Lossless IEEE 802.1p Priorities on Ethernet Interfaces for Multiple Applications (FCoE and iSCSI) on page 500
- Example: Configuring DCBX Application Protocol TLV Exchange on page 553
- Configuring CoS PFC (Congestion Notification Profiles) on page 429
- Understanding CoS IEEE 802.1p Priorities for Lossless Traffic Flows on page 446
- Understanding CoS Flow Control (Ethernet PAUSE and PFC) on page 414

Copyright © 2018, Juniper Networks, Inc.

Example: Configuring Lossless IEEE 802.1p Priorities on Ethernet Interfaces for Multiple Applications (FCoE and iSCSI)

Although the default configuration provides two lossless forwarding classes mapped to two different IEEE 802.1p priorities (code points), you can explicitly configure up to six lossless forwarding classes and map them to different priorities. You can support up to six different types of lossless traffic, and you can support the same type of traffic on different priorities in different parts of your converged network.

This example shows you how to configure two lossless forwarding classes for FCoE traffic and one lossless forwarding class for iSCSI traffic, and map the forwarding classes to three different priorities. (The converged Ethernet network includes two FCoE networks, each of which uses a different priority to identify FCoE traffic, and an iSCSI network.)

- Requirements on page 500
- Overview on page 500
- Configuration on page 505
- Verification on page 511

Requirements

This example uses the following hardware and software components:

- One switch used as an FCoE transit switch
- Junos OS Release 12.3 or later for the QFX Series

Overview

Some converged Ethernet networks support FCoE on more than one IEEE 802.1p priority and also require supporting other lossless traffic classes. Interfaces that carry multiple lossless forwarding classes need to support lossless behavior for the priorities mapped to those forwarding classes. To support the two FCoE forwarding classes and the iSCSI forwarding class used in this example, you need to configure:

- At least one lossless forwarding class for FCoE traffic (this example uses the default **fcoe** forwarding class as one of the two lossless FCoE forwarding classes, so we need to explicitly configure only one FCoE forwarding class)
- A lossless forwarding class for iSCSI traffic
- Behavior aggregate (BA) classifiers to map the lossless forwarding classes to the appropriate IEEE 802.1p code points (priorities) on each interface
- Congestion notification profiles (CNPs) for each interface to enable PFC on the FCoE and iSCSI code points at the interface ingress, and to configure PFC flow control on the interface egress so that the interface can respond to PFC messages received from the connected peer

Copyright © 2018, Juniper Networks, Inc.

NOTE: Configuring or changing PFC on an interface blocks the entire port until the PFC change is completed. After a PFC change is completed, the port is unblocked and traffic resumes. Blocking the port stops ingress and egress traffic, and causes packet loss on all queues on the port until the port is unblocked.

- DCBX applications and an application map to support DCBX application TLV exchange for the FCoE and iSCSI traffic on the configured lossless priorities. By default, DCBX is enabled on all Ethernet interfaces for FCoE, but only on priority 3 (IEEE 802.1p code point 011). To support DCBX application TLV exchange when you are not using the default configuration, you must configure all of the applications and map them to interfaces and priorities.

The priorities specified in the BA classifiers, CNPs, and DCBX application map must match, or the configuration does not work. You must specify the same lossless FCoE forwarding class in each configuration and use the same IEEE 802.1p code point (priority) so that the FCoE traffic is properly classified into flows and so that those flows receive lossless treatment.

Topology

This example shows how to configure two lossless FCoE traffic classes and one lossless iSCSI traffic class, map them to three different priorities, and configure flow control to ensure lossless behavior for those priorities on the interfaces. This example uses four Ethernet interfaces, xe-0/0/31, xe-0/0/32, xe-0/0/33, and xe-0/0/34:

- Interface xe-0/0/31 handles FCoE traffic on priority 3 (IEEE 802.1p code point 011) and iSCSI traffic on priority 4 (code point 100).
- Interface xe-0/0/32 handles FCoE traffic on priority 5 (code point 101) and iSCSI traffic on priority 4.
- Interface xe-0/0/33 handles FCoE traffic on priority 3 and priority 5.
- Interface xe-0/0/34 handles iSCSI traffic on priority 4.

Figure 24 on page 502 shows the topology for this example, and Table 101 on page 502 shows the configuration components for this example.

Figure 24: Topology of the Lossless FCoE and iSCSI Priorities Example

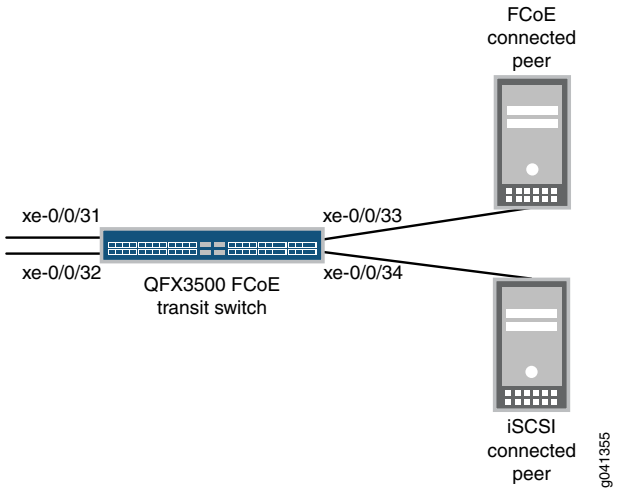

Table 101: Components of the Lossless FCoE and iSCSI Priorities Configuration Topology

Component	Settings
Hardware	One switch
Forwarding classes	This example uses one explicitly configured lossless FCoE forwarding class, the default lossless FCoE forwarding class, and one explicitly configured iSCSI forwarding class. • iSCSI forwarding class: Name—**iscsi** Queue mapping—queue **4** Packet drop attribute—**no-loss** • FCoE forwarding class (explicitly configured): Name—**fcoe1** Queue mapping—queue **5** Packet drop attribute—**no-loss** NOTE: A lossless forwarding class can be mapped to any output queue. However, because the **fcoe1** forwarding class uses priority 5 in this example, matching that traffic to a forwarding class that uses queue 5 creates a configuration that is logical and easy to map because the priority and the queue are identified by the same number. • FCoE forwarding class (default) Name—**fcoe** The default **fcoe** forwarding class is mapped to priority 3 (IEEE 802.1p code point 011) and to output queue 3 with a packet drop attribute of **no-loss**.

Copyright © 2018, Juniper Networks, Inc.

Table 101: Components of the Lossless FCoE and iSCSI Priorities Configuration Topology (continued)

Component	Settings
BA classifiers	Each interface requires a different classifier because each interface handles a different subset of FCoE traffic. • Interface xe-0/0/31 classifier: Name—**fcoe_p3_iscsi** FCoE priority mapping—Forwarding class **fcoe** mapped to code point **011** (IEEE 802.1p priority 3) and a packet loss priority of **low**. iSCSI priority mapping—Forwarding class **iscsi** mapped to code point **100** (priority 4) and a packet loss priority of **low**. All other priority mapping—All other forwarding classes are mapped to the **best-effort** forwarding class with packet loss priorities of **high**. • Interface xe-0/0/32 classifier: Name—**fcoe_p5_iscsi** FCoE priority mapping—Forwarding class **fcoe1** mapped to code point **101** (IEEE 802.1p priority 5) and a packet loss priority of **low**. iSCSI priority mapping—Forwarding class **iscsi** mapped to code point **100** (priority 4) and a packet loss priority of **low**. All other priority mapping—All other forwarding classes are mapped to the **best-effort** forwarding class with packet loss priorities of **high**. • Interface xe-0/0/33 classifier: Name—**fcoe_p3_p5** FCoE priority mapping—Forwarding class **fcoe1** mapped to code point **101** (priority 5) and a packet loss priority of **low**, and forwarding class **fcoe** mapped to code point **011** and a packet loss priority of **low**. All other priority mapping—All other forwarding classes are mapped to the **best-effort** forwarding class with packet loss priorities of **high**. • Interface xe-0/0/34 classifier: Name—**iscsi_classifier** iSCSI priority mapping—Forwarding class **iscsi** mapped to code point **100** (priority 4) and a packet loss priority of **low**. All other priority mapping—All other forwarding classes are mapped to the **best-effort** forwarding class with packet loss priorities of **high**.

Table 101: Components of the Lossless FCoE and iSCSI Priorities Configuration Topology (continued)

Component	Settings
PFC configuration (CNPs)	Each interface requires a different CNP because each interface handles a different subset of FCoE and iSCSI traffic, and must pause that traffic on different priorities. • Interface xe-0/0/31 CNP: CNP name—**fcoe_p3_cnp** Input CNP code points—**011** and **100** MRU—2240 bytes for code point **011**, default value (2500 bytes) for code point **100** Cable length—100 meters NOTE: On interface xe-0/0/31, the FCoE forwarding class is mapped to queue 3 and priority 3 (code point 011), and the iSCSI forwarding class is mapped to queue 4 and priority 4 (code point 100). Therefore, interface xe-0/0/31 does not require an output CNP configuration because queue 3 and queue 4 are enabled for PFC flow control by default on code points 011 and 100, respectively. • Interface xe-0/0/32 CNP: CNP name—**fcoe_p5_cnp** Input CNP code points—**100** and **101** MRU—Default value (2500 bytes) for code point **100**, **2240** bytes for code point **101** Cable length—**150** meters Output CNP code points—**100** and **101** Output CNP flow control queues—**4** and **5** • Interface xe-0/0/33 CNP: CNP name—**fcoe_p3_p5_cnp** Input CNP code points—**011** and **101** MRU—**2240** bytes (both priorities) Cable length—**100** meters Output CNP code points—**011** and **101** Output CNP flow control queues—**3** and **5** • Interface xe-0/0/34 CNP: CNP name—**iscsi_cnp** Input CNP code point—**100** MRU—**2500** bytes (default value) Cable length—**100** meters NOTE: On interface xe-0/0/34, the iSCSI forwarding class is mapped to queue 4 and priority 4 (code point 100). Interface xe-0/0/34 does not require an output CNP configuration because queue 4 is enabled for PFC flow control by default on code point 100. NOTE: When you apply a CNP with an explicit output queue flow control configuration to an interface, the explicit CNP overwrites the default output CNP. The output queues that are enabled for PFC pause in the default configuration (queues 3 and 4) are not enabled for pause unless they are included in the explicitly configured output CNP.

Copyright © 2018, Juniper Networks, Inc.

Table 101: Components of the Lossless FCoE and iSCSI Priorities Configuration Topology (continued)

Component	Settings
DCBX application mapping	This example requires configuring applications for FCoE and iSCSI, including them in the same application map, and applying the application map to all four interfaces. Application map name—**dcbx_iscsi_fcoe_app_map** • FCoE application name—**fcoe_app** Application ether-type—**0x8906** Application map code points—**011** and **101** • iSCSI application name—**iscsi_app** Application protocol type—**tcp** Application destination port—**3260** Application map code point—**100** NOTE: LLDP and DCBX must be enabled on the interface. By default, LLDP and DCBX are enabled on all Ethernet interfaces.

NOTE: This example does not include scheduling (bandwidth allocation) configuration or the FIP snooping configuration. This examples focuses only on the lossless FCoE priority configuration.

QFX10000 switches do not support FIP snooping. For this reason, QFX10000 switches cannot be used as FCoE access transit switches. QFX10000 switches can be used as intermediate or aggregation transit switches in the FCoE path, between an FCoE access transit switch that performs FIP snooping and an FCF.

Configuration

CLI Quick Configuration

To quickly configure two lossless FCoE forwarding classes and one lossless iSCSI forwarding class and map them to different priorities, copy the following commands, paste them in a text file, remove line breaks, change variables and details to match your network configuration, and then copy and paste the commands into the CLI at the **[edit]** hierarchy level.

```
set class-of-service forwarding-classes class iscsi queue-num 4 no-loss
set class-of-service forwarding-classes class fcoe1 queue-num 5 no-loss
set class-of-service classifiers ieee-802.1 fcoe_p3_iscsi forwarding-class fcoe loss-priority low
code-points 011
set class-of-service classifiers ieee-802.1 fcoe_p3_iscsi forwarding-class iscsi loss-priority low
code-points 100
set class-of-service classifiers ieee-802.1 fcoe_p3_iscsi forwarding-class best-effort loss-priority
high code-points 000
set class-of-service classifiers ieee-802.1 fcoe_p3_iscsi forwarding-class best-effort loss-priority
high code-points 001
set class-of-service classifiers ieee-802.1 fcoe_p3_iscsi forwarding-class best-effort loss-priority
high code-points 010
```

```
set class-of-service classifiers ieee-802.1 fcoe_p3_iscsi forwarding-class best-effort loss-priority
high code-points 101
set class-of-service classifiers ieee-802.1 fcoe_p3_iscsi forwarding-class best-effort loss-priority
high code-points 110
set class-of-service classifiers ieee-802.1 fcoe_p3_iscsi forwarding-class best-effort loss-priority
high code-points 111
set class-of-service classifiers ieee-802.1 fcoe_p5_iscsi forwarding-class iscsi loss-priority low
code-points 100
set class-of-service classifiers ieee-802.1 fcoe_p5_iscsi forwarding-class fcoe1 loss-priority low
code-points 101
set class-of-service classifiers ieee-802.1 fcoe_p5_iscsi forwarding-class best-effort loss-priority
high code-points 000
set class-of-service classifiers ieee-802.1 fcoe_p5_iscsi forwarding-class best-effort loss-priority
high code-points 001
set class-of-service classifiers ieee-802.1 fcoe_p5_iscsi forwarding-class best-effort loss-priority
high code-points 010
set class-of-service classifiers ieee-802.1 fcoe_p5_iscsi forwarding-class best-effort loss-priority
high code-points 011
set class-of-service classifiers ieee-802.1 fcoe_p5_iscsi forwarding-class best-effort loss-priority
high code-points 110
set class-of-service classifiers ieee-802.1 fcoe_p5_iscsi forwarding-class best-effort loss-priority
high code-points 111
set class-of-service classifiers ieee-802.1 fcoe_p3_p5 forwarding-class fcoe loss-priority low
code-points 011
set class-of-service classifiers ieee-802.1 fcoe_p3_p5 forwarding-class fcoe1 loss-priority low
code-points 101
set class-of-service classifiers ieee-802.1 fcoe_p3_p5 forwarding-class best-effort loss-priority
high code-points 000
set class-of-service classifiers ieee-802.1 fcoe_p3_p5 forwarding-class best-effort loss-priority
high code-points 001
set class-of-service classifiers ieee-802.1 fcoe_p3_p5 forwarding-class best-effort loss-priority
high code-points 010
set class-of-service classifiers ieee-802.1 fcoe_p3_p5 forwarding-class best-effort loss-priority
high code-points 100
set class-of-service classifiers ieee-802.1 fcoe_p3_p5 forwarding-class best-effort loss-priority
high code-points 110
set class-of-service classifiers ieee-802.1 fcoe_p3_p5 forwarding-class best-effort loss-priority
high code-points 111
set class-of-service classifiers ieee-802.1 iscsi_classifier forwarding-class iscsi loss-priority low
code-points 100
set class-of-service classifiers ieee-802.1 iscsi_classifier forwarding-class best-effort loss-priority
high code-points 000
set class-of-service classifiers ieee-802.1 iscsi_classifier forwarding-class best-effort loss-priority
high code-points 001
set class-of-service classifiers ieee-802.1 iscsi_classifier forwarding-class best-effort loss-priority
high code-points 010
set class-of-service classifiers ieee-802.1 iscsi_classifier forwarding-class best-effort loss-priority
high code-points 011
set class-of-service classifiers ieee-802.1 iscsi_classifier forwarding-class best-effort loss-priority
high code-points 101
set class-of-service classifiers ieee-802.1 iscsi_classifier forwarding-class best-effort loss-priority
high code-points 110
set class-of-service classifiers ieee-802.1 iscsi_classifier forwarding-class best-effort loss-priority
high code-points 111
set class-of-service interfaces xe-0/0/31 unit 0 classifiers ieee-802.1 fcoe_p3_iscsi
set class-of-service interfaces xe-0/0/32 unit 0 classifiers ieee-802.1 fcoe_p5_iscsi
set class-of-service interfaces xe-0/0/33 unit 0 classifiers ieee-802.1 fcoe_p3_p5set
class-of-service interfaces xe-0/0/34 unit 0 classifiers ieee-802.1 iscsi_classifier
set class-of-service congestion-notification-profile fcoe_p3_cnp input ieee-802.1 code-point 011
pfc mru 2240
```


Copyright © 2018, Juniper Networks, Inc.

```
set class-of-service congestion-notification-profile fcoe_p3_cnp input ieee-802.1 code-point 100
pfc
set class-of-service congestion-notification-profile fcoe_p3_cnp input cable-length 100
set class-of-service congestion-notification-profile fcoe_p5_cnp input ieee-802.1 code-point 100
pfc
set class-of-service congestion-notification-profile fcoe_p5_cnp input ieee-802.1 code-point 101
pfc mru 2240
set class-of-service congestion-notification-profile fcoe_p5_cnp input cable-length 150
set class-of-service congestion-notification-profile fcoe_p5_cnp output ieee-802.1 code-point
100 pfc flow-control-queue 4
set class-of-service congestion-notification-profile fcoe_p5_cnp output ieee-802.1 code-point
101 pfc flow-control-queue 5
set class-of-service congestion-notification-profile fcoe_p3_p5_cnp input ieee-802.1 code-point
011 pfc mru 2240
set class-of-service congestion-notification-profile fcoe_p3_p5_cnp input ieee-802.1 code-point
101 pfc mru 2240
set class-of-service congestion-notification-profile fcoe_p3_p5_cnp input cable-length 100
set class-of-service congestion-notification-profile fcoe_p3_p5_cnp output ieee-802.1 code-point
011 pfc flow-control-queue 3
set class-of-service congestion-notification-profile fcoe_p3_p5_cnp output ieee-802.1 code-point
101 pfc flow-control-queue 5
set class-of-service congestion-notification-profile iscsi_cnp input ieee-802.1 code-point 100 pfc
set class-of-service congestion-notification-profile iscsi_cnp input cable-length 100
set class-of-service interfaces xe-0/0/31 congestion-notification-profile fcoe_p3_cnp
set class-of-service interfaces xe-0/0/32 congestion-notification-profile fcoe_p5_cnp
set class-of-service interfaces xe-0/0/33 congestion-notification-profile fcoe_p3_p5_cnp
set class-of-service interfaces xe-0/0/34 congestion-notification-profile iscsi_cnp
set applications application iscsi_app protocol tcp destination-port 3260
set applications application fcoe_app ether-type 0x8906
set policy-options application-maps dcbx_iscsi_fcoe_app_map application iscsi_app code-points
100
set policy-options application-maps dcbx_iscsi_fcoe_app_map application fcoe_app code-points
[011 101]
set protocols dcbx interface xe-0/0/31 application-map dcbx_iscsi_fcoe_app_map
set protocols dcbx interface xe-0/0/32 application-map dcbx_iscsi_fcoe_app_map
set protocols dcbx interface xe-0/0/33 application-map dcbx_iscsi_fcoe_app_map
set protocols dcbx interface xe-0/0/34 application-map dcbx_iscsi_fcoe_app_map
```

Step-by-Step Procedure

To configure two lossless forwarding classes for FCoE traffic and one lossless forwarding class for iSCSI traffic, classify the traffic into the three forwarding classes, configure congestion notification profiles to enable PFC on the FCoE priorities and output queues, and configure DCBX application protocol TLV exchange for traffic on both FCoE priorities:

1. Configure lossless forwarding classes **iscsi** for iSCSI traffic and **fcoe1** for FCoE traffic (this example uses the default **fcoe** forwarding class as the other lossless FCoE forwarding class) and map them to output queues:

   ```
   [edit class-of-service]
   user@switch# set forwarding-classes class iscsi queue-num 4 no-loss
   user@switch# set forwarding-classes class fcoe1 queue-num 5 no-loss
   ```

2. Configure the ingress classifier (**fcoe_p3_iscsi**) for interface **xe-0/0/31**. The classifier maps the FCoE priority (code point **011**) to lossless FCoE forwarding class **fcoe** and the iSCSI priority (code point **100**) to lossless iSCSI forwarding class **iscsi**, and traffic

of other priorities to the **best-effort** forwarding class with a packet loss priority of **high**:

```
[edit class-of-service classifiers]
user@switch# set ieee-802.1 fcoe_p3_iscsi forwarding-class fcoe loss-priority low
code-points 011
user@switch# set ieee-802.1 fcoe_p3_iscsi forwarding-class iscsi loss-priority low
code-points 100
user@switch# set ieee-802.1 fcoe_p3_iscsi forwarding-class best-effort loss-priority high
code-points 000
user@switch# set ieee-802.1 fcoe_p3_iscsi forwarding-class best-effort loss-priority high
code-points 001
user@switch# set ieee-802.1 fcoe_p3_iscsi forwarding-class best-effort loss-priority high
code-points 010
user@switch# set ieee-802.1 fcoe_p3_iscsi forwarding-class best-effort loss-priority high
code-points 101
user@switch# set ieee-802.1 fcoe_p3_iscsi forwarding-class best-effort loss-priority high
code-points 110
user@switch# set ieee-802.1 fcoe_p3_iscsi forwarding-class best-effort loss-priority high
code-points 111
```

3. Configure the ingress classifier (**fcoe_p5_iscsi**) for interface **xe-0/0/32**. The classifier maps the FCoE priority (code point **101**) to lossless FCoE forwarding class **fcoe1** and the iSCSI priority (code point **100**) to lossless iSCSI forwarding class **iscsi**, and traffic of other priorities to the **best-effort** forwarding class with a packet loss priority of **high**:

```
[edit class-of-service classifiers]
user@switch# set ieee-802.1 fcoe_p5_iscsi forwarding-class iscsi loss-priority low
code-points 100
user@switch# set ieee-802.1 fcoe_p5_iscsi forwarding-class fcoe1 loss-priority low
code-points 101
user@switch# set ieee-802.1 fcoe_p5_iscsi forwarding-class best-effort loss-priority high
code-points 000
user@switch# set ieee-802.1 fcoe_p5_iscsi forwarding-class best-effort loss-priority high
code-points 001
user@switch# set ieee-802.1 fcoe_p5_iscsi forwarding-class best-effort loss-priority high
code-points 010
user@switch# set ieee-802.1 fcoe_p5_iscsi forwarding-class best-effort loss-priority high
code-points 011
user@switch# set ieee-802.1 fcoe_p5_iscsi forwarding-class best-effort loss-priority high
code-points 110
user@switch# set ieee-802.1 fcoe_p5_iscsi forwarding-class best-effort loss-priority high
code-points 111
```

4. Configure the ingress classifier (**fcoe_p3_p5**) for interface **xe-0/0/33**. The classifier maps the two FCoE priorities (code points **011** and **101**) to lossless FCoE forwarding classes **fcoe** and **fcoe1**, respectively, and traffic of other priorities to the **best-effort** forwarding class with a packet loss priority of **high**:

```
[edit class-of-service classifiers]
user@switch# set ieee-802.1 fcoe_p3_p5 forwarding-class fcoe loss-priority low code-points
011
user@switch# set ieee-802.1 fcoe_p3_p5 forwarding-class fcoe1 loss-priority low code-points
101
```

 Copyright © 2018, Juniper Networks, Inc.

```
user@switch# set ieee-802.1 fcoe_p3_p5 forwarding-class best-effort loss-priority high
code-points 000
user@switch# set ieee-802.1 fcoe_p3_p5 forwarding-class best-effort loss-priority high
code-points 001
user@switch# set ieee-802.1 fcoe_p3_p5 forwarding-class best-effort loss-priority high
code-points 010
user@switch# set ieee-802.1 fcoe_p3_p5 forwarding-class best-effort loss-priority high
code-points 100
user@switch# set ieee-802.1 fcoe_p3_p5 forwarding-class best-effort loss-priority high
code-points 110
user@switch# set ieee-802.1 fcoe_p3_p5 forwarding-class best-effort loss-priority high
code-points 111
```

5. Configure the ingress classifier (**iscsi_classifier**) for interface **xe-0/0/34**. The classifier maps the iSCSI priority (code point **101**) to lossless iSCSI forwarding class **iscsi**, and traffic of other priorities to the **best-effort** forwarding class with a packet loss priority of **high**:

```
[edit class-of-service classifiers]
user@switch# set ieee-802.1 iscsi_classifier forwarding-class iscsi loss-priority low
code-points 100
user@switch# set ieee-802.1 iscsi_classifier forwarding-class best-effort loss-priority high
code-points 000
user@switch# set ieee-802.1 iscsi_classifier forwarding-class best-effort loss-priority high
code-points 001
user@switch# set ieee-802.1 iscsi_classifier forwarding-class best-effort loss-priority high
code-points 010
user@switch# set ieee-802.1 iscsi_classifier forwarding-class best-effort loss-priority high
code-points 011
user@switch# set ieee-802.1 iscsi_classifier forwarding-class best-effort loss-priority high
code-points 101
user@switch# set ieee-802.1 iscsi_classifier forwarding-class best-effort loss-priority high
code-points 110
user@switch# set ieee-802.1 iscsi_classifier forwarding-class best-effort loss-priority high
code-points 111
```

6. Apply each classifier to the appropriate interface:

```
[edit class-of-service]
user@switch# set interfaces xe-0/0/31 unit 0 classifiers ieee-802.1 fcoe_p3_iscsi
user@switch# set interfaces xe-0/0/32 unit 0 classifiers ieee-802.1 fcoe_p5_iscsi
user@switch# set interfaces xe-0/0/33 unit 0 classifiers ieee-802.1 fcoe_p3_p5
user@switch# set interfaces xe-0/0/34 unit 0 classifiers ieee-802.1 iscsi_classifier
```

7. Configure the CNP input stanza for interface xe-0/0/31 to enable PFC on the FCoE and iSCSI priorities that the interface handles (code points 011 and 100), set the MRU value for the FCoE traffic (2240 bytes), and set the cable length value (100 meters). No output stanza is needed because queues 3 and 4 are paused by default on priorities 3 and 4, respectively, and we are not explicitly configuring output queue flow control for any other queues.

```
[edit class-of-service]
user@switch# set congestion-notification-profile fcoe_p3_cnp input ieee-802.1 code-point
011 pfc mru 2240
```

```
user@switch# set congestion-notification-profile fcoe_p3_cnp input ieee-802.1 code-point
100 pfc
user@switch# set congestion-notification-profile fcoe_p3_cnp input cable-length 100
```

8. Configure the CNP for interface xe-0/0/32. The input stanza enables PFC on the FCoE priority (code point 101), sets the MRU value for FCoE traffic (2240 bytes), enables PFC on the iSCSI priority (code point 100), and sets the cable length value (150 meters). The output stanza configures flow control on output queue 5 on the FCoE priority and on output queue 4 on the iSCSI priority:

```
[edit class-of-service]
user@switch# set congestion-notification-profile fcoe_p5_cnp input ieee-802.1 code-point
100 pfc
user@switch# set congestion-notification-profile fcoe_p5_cnp input ieee-802.1 code-point
101 pfc mru 2240
user@switch# set congestion-notification-profile fcoe_p5_cnp input cable-length 150
user@switch# set congestion-notification-profile fcoe_p5_cnp output ieee-802.1 code-point
100 pfc flow-control-queue 4
user@switch# set congestion-notification-profile fcoe_p5_cnp output ieee-802.1 code-point
101 pfc flow-control-queue 5
```

9. Configure the CNP for interface xe-0/0/33. The input stanza enables PFC on the FCoE priorities (IEEE 802.1p code points 011 and 101), sets the MRU value (2240 bytes), and sets the cable length value (100 meters). The output stanza configures flow control on output queues 3 and 5 on the FCoE priorities:

```
[edit class-of-service]
user@switch# set congestion-notification-profile fcoe_p3_p5_cnp input ieee-802.1
code-point 011 pfc mru 2240
user@switch# set congestion-notification-profile fcoe_p3_p5_cnp input ieee-802.1
code-point 101 pfc mru 2240
user@switch# set congestion-notification-profile fcoe_p3_p5_cnp input cable-length 100
user@switch# set congestion-notification-profile fcoe_p3_p5_cnp output ieee-802.1
code-point 011 pfc flow-control-queue 3
user@switch# set congestion-notification-profile fcoe_p3_p5_cnp output ieee-802.1
code-point 101 pfc flow-control-queue 5
```

10. Configure the CNP input stanza for interface xe-0/0/34 to enable PFC on the iSCSI priority (code point 100) and set the cable length value (100 meters). No output stanza is needed because queue 4 is paused by default on priority 4, and we are not explicitly configuring output queue flow control for any other queues.

```
[edit class-of-service]
user@switch# set congestion-notification-profile iscsi_cnp input ieee-802.1 code-point
100 pfc
user@switch# set congestion-notification-profile iscsi_cnp input cable-length 100
```

11. Apply each CNP to the appropriate interface:

```
[edit class-of-service]
user@switch# set interfaces xe-0/0/31 congestion-notification-profile fcoe_p3_cnp
user@switch# set interfaces xe-0/0/32 congestion-notification-profile fcoe_p5_cnp
```

 Copyright © 2018, Juniper Networks, Inc.

```
user@switch# set interfaces xe-0/0/33 congestion-notification-profile fcoe_p3_p5_cnp
user@switch# set interfaces xe-0/0/34 congestion-notification-profile iscsi_cnp
```

12. Configure the DCBX applications for FCoE and iSCSI to map to the interfaces so that DCBX can exchange application protocol TLVs on the IEEE 802.1p priorities used for FCoE and iSCSI traffic:

```
[edit]
user@switch# set applications application fcoe_app ether-type 0x8906
user@switch# set applications application iscsi_app protocol tcp destination-port 3260
```

13. Configure a DCBX application map to map the FCoE and iSCSI applications to the correct priorities:

```
[edit]
user@switch# set policy-options application-maps dcbx_iscsi_fcoe_app_map application
fcoe_app code-points [011 101]
user@switch# set policy-options application-maps dcbx_iscsi_fcoe_app_map application
iscsi_app code-points 100
```

14. Apply the application map to the interfaces so that DCBX exchanges FCoE application TLVs on the correct code points:

```
[edit]
user@switch# set protocols dcbx interface xe-0/0/31 application-map
dcbx_iscsi_fcoe_app_map
user@switch# set protocols dcbx interface xe-0/0/32 application-map
dcbx_iscsi_fcoe_app_map
user@switch# set protocols dcbx interface xe-0/0/33 application-map
dcbx_iscsi_fcoe_app_map
user@switch# set protocols dcbx interface xe-0/0/34 application-map
dcbx_iscsi_fcoe_app_map
```

Verification

To verify the configuration and proper operation of the lossless forwarding classes and IEEE 802.1p priorities, perform these tasks:

- Verifying the Forwarding Class Configuration on page 512
- Verifying the Behavior Aggregate Classifier Configuration on page 512
- Verifying the PFC Flow Control Configuration (CNP) on page 513
- Verifying the Interface Configuration on page 516
- Verifying the DCBX Application Configuration on page 517
- Verifying the DCBX Application Map Configuration on page 517
- Verifying the DCBX Application Protocol Exchange Interface Configuration on page 518

Verifying the Forwarding Class Configuration

Purpose Verify that the lossless forwarding classes **iscsi** and **fcoe1** have been created and that the default lossless forwarding class **fcoe** is still enabled for lossless transport.

Action Show the forwarding class configuration by using the operational command **show class-of-service forwarding class**:

```
user@switch> show class-of-service forwarding-class
Forwarding class                      ID      Queue  Policing priority  No-Loss

  best-effort                         0        0         normal        Disabled

  fcoe                                1        3         normal        Enabled

  iscsi                               2        4         normal        Enabled

  network-control                     3        7         normal        Disabled

  fcoe1                               4        5         normal        Enabled

  mcast                               8        8         normal        Disabled
```

Meaning The **show class-of-service forwarding-class** command shows all of the forwarding classes. The command output shows that the **iscsi** and **fcoe1** forwarding classes are configured on output queues **4** and **5**, respectively, with the no-loss packet drop attribute enabled.

Because we did not explicitly configure the default **fcoe** forwarding class, it remains in its default state (lossless configuration).

Verifying the Behavior Aggregate Classifier Configuration

Purpose Verify that the four classifiers map the forwarding classes to the correct IEEE 802.1p code points (priorities) and packet loss priorities.

Action List the classifiers configured to support lossless FCoE transport using the operational mode command **show class-of-service classifier**:

```
user@switch> show class-of-service classifier
Classifier: fcoe_p3_iscsi, Code point type: ieee-802.1, Index: 13915
  Code point         Forwarding class                    Loss priority
  011                fcoe                                low
  100                iscsi                               low

Classifier: fcoe_p5_iscsi, Code point type: ieee-802.1, Index: 62035
  Code point         Forwarding class                    Loss priority
  100                iscsi                               low
  101                fcoe1                               low
```

 Copyright © 2018, Juniper Networks, Inc.

```
Classifier: fcoe_p3_p5, Code point type: ieee-802.1, Index: 17774
  Code point         Forwarding class                    Loss priority
  011                fcoe                                low
  101                fcoe1                               low

Classifier: iscsi_classifier, Code point type: ieee-802.1, Index: 31635
  Code point         Forwarding class                    Loss priority
  100                iscsi                               low
```

Meaning The **show class-of-service classifier** command shows the IEEE 802.1p code points and the loss priorities that are mapped to the forwarding classes in each classifier. The command output shows that there are four classifiers, **fcoe_p3_iscsi**, **fcoe_p5_iscsi**, **fcoe_p3_p5**, and **iscsi_classifier**.

Classifier **fcoe_p3_iscsi** maps code point **011** (priority 3) to default lossless forwarding class **fcoe** and a packet loss priority of **low**, and code point **100** (priority 4) to explicitly configured lossless forwarding class **iscsi**, and all other priorities to the **best-effort** forwarding class with a packet loss priority of **high**.

Classifier **fcoe_p5_iscsi** maps code point **100** to explicitly configured forwarding class **iscsi** and a packet loss priority of **low**, and code point **101** (priority 5) to explicitly configured lossless forwarding class **fcoe1** and a packet loss priority of **low**, and all other priorities to the **best-effort** forwarding class with a packet loss priority of **high**.

Classifier **fcoe_p3_p5** maps code point **011** to default lossless forwarding class **fcoe** and a packet loss priority of **low**, and maps code point **101** to explicitly configured lossless forwarding class **fcoe1** and a packet loss priority of **low**.The classifier maps all other priorities to the **best-effort** forwarding class with a packet loss priority of **high**.

Classifier **iscsi_classifier** maps code point **100** to explicitly configured forwarding class **iscsi** and a packet loss priority of **low**, and all other priorities to the **best-effort** forwarding class with a packet loss priority of **high**.

Verifying the PFC Flow Control Configuration (CNP)

Purpose Verify that PFC is enabled on the correct input priorities and that flow control is configured on the correct output queues and priorities in each CNP.

Action List the congestion notification profiles using the operational mode command **show class-of-service congestion-notification**:

```
user@switch> show class-of-service congestion-notification
```

```
Name: fcoe_p3_cnp, Index: 12037
Type: Input
Cable Length: 100 m
  Priority     PFC          MRU
  000          Disabled
  001          Disabled
  010          Disabled
```

```
  011          Enabled      2240
  100          Enabled      9216
  101          Disabled
  110          Disabled
  111          Disabled
Type: Output
  Priority     Flow-Control-Queues
  000
               0
  001
               1
  010
               2
  011
               3
  100
               4
  101
               5
  110
               6
  111
               7

Name: fcoe_p3_p5_cnp, Index: 46484
Type: Input
Cable Length: 100 m
  Priority     PFC          MRU
  000          Disabled
  001          Disabled
  010          Disabled
  011          Enabled      2240
  100          Disabled
  101          Enabled      2240
  110          Disabled
  111          Disabled
Type: Output
  Priority     Flow-Control-Queues
  011
               3
  101
               5

Name: fcoe_p5_cnp, Index: 12133
Type: Input
Cable Length: 150 m
  Priority     PFC          MRU
  000          Disabled
  001          Disabled
  010          Disabled
  011          Disabled
  100          Enabled      9216
  101          Enabled      2240
  110          Disabled
  111          Disabled
Type: Output
  100
               4
  101
               5
```


Copyright © 2018, Juniper Networks, Inc.

```
Name: iscsi_cnp, Index: 19342
Type: Input
Cable Length: 100 m
  Priority     PFC          MRU
  000          Disabled
  001          Disabled
  010          Disabled
  011          Disabled
  100          Enabled      9216
  101          Disabled
  110          Disabled
  111          Disabled
Type: Output
  Priority     Flow-Control-Queues
  000
               0
  001
               1
  010
               2
  011
               3
  100
               4
  101
               5
  110
               6
  111
               7
```

Meaning The **show class-of-service congestion-notification** command shows the input and output stanzas of the four CNPs.

For CNP **fcoe_p3_cnp**, the input stanza shows that PFC is enabled on IEEE 802.1p code point **011** (priority 3) with an MRU of **2240** bytes, and cable length of **100** meters. The input stanza also shows that PFC is enabled on code point **100** (priority 4) with the default MRU value of **9216** bytes. The CNP output stanza shows the default mapping of priorities to output queues because no explicit output CNP is configured.

NOTE: By default, only queues 3 and 4 are enabled respond to pause messages from the connected peer. For queue 3 to respond to pause messages, priority 3 (code point 011) must be enabled for PFC in the input stanza. For queue 4 to respond to pause messages, priority 4 (code point 100) must be enabled for PFC in the input stanza. In this example, only queues 3 and 4 respond to pause messages from the connected peer on interfaces that use CNP fcoe_p3_cnp because the input stanza enables PFC only on priorities 3 and 4.

For CNP **fcoe_p3_p5_cnp**, the input stanza shows that PFC is enabled on code points **011** and **101** (priority 5), the MRU is **2240** bytes on both priorities, and the cable length is **100** meters. The CNP output stanza shows that output flow control is configured on queues **3** and **5** for code points **011** and **101**, respectively.

For CNP **fcoe_p5_cnp**, the input stanza shows that PFC is enabled on code points **100** and **101**. The MRU for code point **101** (FCoE traffic) is **2240** bytes and the MRU for code point **100** is **9216**. The interface cable length is **150** meters. The CNP output stanza shows that output flow control is configured on queue **4** for code point **100** and on queue **5** for code point **101**.

For CNP **iscsi_cnp**, the input stanza shows that PFC is enabled on code point **100**, the MRU value is **9216** bytes, and the interface cable length is **100** meters. The CNP output stanza shows the default mapping of priorities to output queues because no explicit output CNP is configured.

Verifying the Interface Configuration

Purpose Verify that the correct classifiers and congestion notification profiles are configured on the correct interfaces.

Action List the ingress interfaces using the operational mode commands **show configuration class-of-service interfaces xe-0/0/31**, **show configuration class-of-service interfaces xe-0/0/32**, **show configuration class-of-service interfaces xe-0/0/33**, and **show configuration class-of-service interfaces xe-0/0/34**:

```
user@switch> show configuration class-of-service interfaces xe-0/0/31
congestion-notification-profile fcoe_p3_cnp;
unit 0 {
    classifiers {
        ieee-802.1 fcoe_p3_iscsi;
    }
}
```

```
user@switch> show configuration class-of-service interfaces xe-0/0/32
congestion-notification-profile fcoe_p5_cnp;
unit 0 {
    classifiers {
        ieee-802.1 fcoe_p5_iscsi;
    }
}
```

```
user@switch> show configuration class-of-service interfaces xe-0/0/33
congestion-notification-profile fcoe_p3_p5_cnp;
unit 0 {
    classifiers {
        ieee-802.1 fcoe_p3_p5;
    }
}
```

 Copyright © 2018, Juniper Networks, Inc.

```
user@switch> show configuration class-of-service interfaces xe-0/0/34
congestion-notification-profile iscsi_cnp;
unit 0 {
    classifiers {
        ieee-802.1 iscsi_classifier;
    }
}
```

Meaning The **show configuration class-of-service interfaces xe-0/0/31** command shows that the congestion notification profile **fcoe_p3_cnp** is configured on the interface, and that the IEEE 802.1p classifier associated with the interface is **fcoe_p3_iscsi**.

The **show configuration class-of-service interfaces xe-0/0/32** command shows that the congestion notification profile **fcoe_p5_cnp** is configured on the interface, and that the IEEE 802.1p classifier associated with the interface is **fcoe_p5_iscsi**.

The **show configuration class-of-service interfaces xe-0/0/33** command shows that the congestion notification profile **fcoe_p3_p5_cnp** is configured on the interface, and that the IEEE 802.1p classifier associated with the interface is **fcoe_p3_p5**.

The **show configuration class-of-service interfaces xe-0/0/34** command shows that the congestion notification profile **iscsi_cnp** is configured on the interface, and that the IEEE 802.1p classifier associated with the interface is **iscsi_classifier**.

Verifying the DCBX Application Configuration

Purpose Verify that the DCBX applications for FCoE and iSCSI are configured.

Action List the DCBX applications by using the configuration mode command **show applications**:

```
user@switch# show applications
application iscsi_app {
    protocol tcp;
    destination-port 3260;
}
application fcoe_app {
    ether-type 0x8906;
```

Meaning The **show applications** configuration mode command shows all of the configured applications. The output shows that the application **iscsi_app** is configured with a protocol value of **tcp** and a destination port value of **3260**, and that the application **fcoe_app** is configured with an EtherType of **0x8906** (the correct EtherType for FCoE traffic).

Verifying the DCBX Application Map Configuration

Purpose Verify that the application map is configured.

Action List the application maps by using the configuration mode command **show policy-options application-maps**:

```
user@switch# show policy-options application-maps
dcbx-iscsi-fcoe-app-map {
    application iscsi_app code-points 100;
    application fcoe_app code-points [011 101];
}
```

Meaning The **show policy-options application-maps** configuration mode command lists all of the configured application maps and the applications that belong to each application map. The output shows that there is one application map named **dcbx-iscsi-fcoe_app_map**. It consists of the application **iscsi_app** mapped to code point **100** and the application **fcoe_app** mapped to code points **011** and **101**.

Verifying the DCBX Application Protocol Exchange Interface Configuration

Purpose Verify that the application maps are applied to the correct interfaces.

Action List the application maps on each interface using the configuration mode command **show protocols dcbx**:

```
user@switch# show protocols dcbx
interface xe-0/0/31.0 {
    application-map dcbx-iscsi-fcoe-app-map;
}
interface xe-0/0/32.0 {
    application-map dcbx-iscsi-fcoe-app-map;
}
interface xe-0/0/33.0 {
    application-map dcbx-iscsi-fcoe-app-map;
}
interface xe-0/0/34.0 {
    application-map dcbx-iscsi-fcoe-app-map;
}
```

Meaning The **show protocols dcbx** configuration mode command lists the application map association with interfaces. The output shows that all four interfaces use the application map **dcbx-iscsi-fcoe-app-map**.

Related Documentation

- Example: Configuring Two or More Lossless FCoE Priorities on the Same FCoE Transit Switch Interface on page 474
- Example: Configuring Lossless FCoE Traffic When the Converged Ethernet Network Does Not Use IEEE 802.1p Priority 3 for FCoE Traffic (FCoE Transit Switch) on page 465
- Example: Configuring Two or More Lossless FCoE IEEE 802.1p Priorities on Different FCoE Transit Switch Interfaces on page 484

 Copyright © 2018, Juniper Networks, Inc.

- Example: Configuring DCBX Application Protocol TLV Exchange on page 553
- Configuring CoS PFC (Congestion Notification Profiles) on page 429
- Understanding CoS IEEE 802.1p Priorities for Lossless Traffic Flows on page 446
- Understanding CoS Flow Control (Ethernet PAUSE and PFC) on page 414

Understanding CoS IEEE 802.1p Priority Remapping on an FCoE-FC Gateway

When the QFX Series acts as an FCoE-FC gateway, it connects an Ethernet network that carries Fibre Channel over Ethernet (FCoE) traffic to a Fibre Channel (FC) network. Ethernet interfaces connect to the FCoE network. Native FC interfaces (NP_Ports) connect to the FC network.

FCoE traffic typically uses IEEE 802.1p priority 3 (code point 011). The QFX Series default configuration maps priority 3 traffic to the FCoE forwarding class. If your FCoE network uses priority 3 for FCoE traffic, you do not need to remap priorities, because the default configuration maps priority 3 to the FCoE forwarding class. (But you do need to enable PFC on IEEE 802.1p code point 3 on the Ethernet interfaces to achieve lossless behavior.)

However, if the FCoE network uses a different IEEE 802.1p priority than priority 3 for FCoE traffic, then you can use priority remapping to classify FCoE traffic into a lossless forwarding class mapped to that priority (and classified to that priority on the FCoE Ethernet interfaces in the ingress classifier). You specify the lossless forwarding class used for the FCoE traffic by configuring a fixed classifier and applying it to the native FC (NP_Port) interface. All traffic received from the FC SAN on that NP_Port interface is classified into the forwarding class specified in the fixed classifier.

When native FC interfaces on the FCoE-FC gateway encapsulate incoming FC traffic in Ethernet to create FCoE frames, by default they assign IEEE 802.1p code point 011 to the FCoE traffic, forward the traffic internally to the gateway Ethernet interfaces, and then forward the traffic to the FCoE network. Setting a rewrite value for the IEEE 802.1p code point configures the gateway native FC interface to assign the rewrite value priority to the FCoE frames when the native FC interface forwards the FCoE frames to the gateway Ethernet interface. Instead of a priority of 3, the FCoE frames use the priority specified in the rewrite value.

You can configure one rewrite value for each local FCoE-FC gateway fabric. All of the native FC interfaces in a particular fabric must use the same rewrite value. Native FC interfaces that belong to different FCoE-FC gateway fabrics can use different rewrite values.

- Priority Remapping Configuration on page 519
- Configuration Rules on page 520
- Fate Sharing on page 521

Priority Remapping Configuration

Native FC interfaces on an FCoE-FC gateway receive native FC traffic from the FC SAN and encapsulate it in Ethernet to create FCoE frames. Priority remapping enables you to

map the encapsulated FC traffic (the FCoE traffic) to any IEEE 802.1p priority. (This is similar to the rewrite rules you can configure to remap forwarding classes to code points on Ethernet egress interfaces, but the rewrite takes place at the ingress FC interface so that the QFX Series uses the correct priority for FCoE traffic on the converged Ethernet network.)

To support lossless traffic flows, you must configure the remapped priority correctly on the native FC interfaces and also on the Ethernet interfaces that connect to the FCoE network. Achieving lossless behavior for FCoE traffic when you remap the FCoE priority requires configuring:

- A lossless forwarding class for FCoE traffic (or using the default *fcoe* forwarding class)
- A behavior aggregate (BA) classifier on the FCoE Ethernet interfaces to map the FCoE forwarding class to the IEEE 802.1p code points (priority) used for FCoE traffic on the FCoE network (the ingress classifier priority for the forwarding class must be the same as the rewrite value priority)
- A fixed classifier on the FCoE-FC gateway FC interface that maps all traffic from the FC network into the lossless FCoE forwarding class (the forwarding class must be lossless)
- A priority rewrite value that remaps the IEEE 802.1p code point on the FCoE-FC gateway FC interface to the priority used for FCoE traffic on the FCoE network
- An input congestion notification profile (CNP) to enable priority-based flow control (PFC) on the FCoE code point (the code point used as the rewrite value) at the Ethernet ingress interfaces

The ingress and egress configurations must match to achieve lossless behavior. The priority and the forwarding class specified in the BA classifier and in the CNP on the Ethernet ingress interfaces must match the fixed classifier and rewrite value on the FC interfaces. You must specify the same lossless FCoE forwarding class in each configuration and use the same IEEE 802.1p code point (priority) so that the FCoE traffic is properly classified into flows and so that those flows receive lossless treatment.

For example, if you configure a lossless forwarding class named *my_fcoe_fc* and your Ethernet network uses IEEE 802.1p priority 5 (code point 101) for FCoE traffic, then:

- The forwarding class configuration, the BA classifier, and the fixed classifier all specify *my_fcoe_fc* as the forwarding class
- The BA classifier, the input CNP, and the rewrite value all specify the IEEE 802.1p code point 101

Configuration Rules

The following configuration rules apply when you remap priorities on an FCoE-FC gateway:

 Copyright © 2018, Juniper Networks, Inc.

- Each native FC interface (NP_Port) supports one IEEE 802.1p priority value. The interface rewrites the IEEE 802.1p code point of all incoming traffic on the interface to the rewrite value. (The FC interface uses either the default value of 3 or the rewrite value for all incoming traffic.)
- Ports in the same FCoE-FC gateway local fc-fabric must use the same rewrite value. For example, if ports fc-0/0/0 and fc-0/0/1 are in the same local FCoE-FC gateway fabric, they must use the same rewrite value. If you attempt to commit a configuration that uses different IEEE 802.1p priority rewrite values, the system returns a commit error.
- Ports in different FCoE-FC gateway local fc-fabrics can use different rewrite values. An example scenario is:
  - Interfaces fc-0/0/0 and fc-0/0/1 are in FCoE-FC gateway fc-fabric *my_fc_fab1*.
  - Interfaces fc-0/0/4 and fc-0/0/5 are in FCoE-FC gateway fc-fabric *my_fc_fab2*.

  In this scenario, interfaces fc-0/0/0 and fc-0/0/1 must use the same rewrite value because they belong to the same local FC fabric on the gateway. Interfaces fc-0/0/4 and fc-0/0/5 also must use the same rewrite value because they belong to the same local FC fabric. However, the rewrite value you use for interfaces fc-0/0/0 and fc-0/0/1 can be different than the rewrite value you use for interfaces fc-0/0/4 and fc-0/0/5 because the interfaces belong to different local FC fabrics.
- You can apply the rewrite value only to native FC interfaces; you cannot apply the rewrite value configuration to Ethernet interfaces.
- The forwarding class specified in the fixed classifier on the native FC interface must be a lossless forwarding class. You cannot apply a fixed classifier to a native FC interface unless the associated forwarding class is lossless. (The forwarding class must be one of the two default lossless forwarding classes, or you must explicitly configure the forwarding class with the *no-loss* drop attribute.)
- The lossless forwarding class and IEEE 802.1p priority configuration must match on the FCoE-FC gateway native FC interfaces and Ethernet interfaces:
  - The same IEEE 802.1p priority (code point) must be enabled for PFC on the Ethernet ingress interfaces, classified to the lossless forwarding class used in the native FC interface fixed classifier, and set as the rewrite value on the native FC interfaces.
  - The same lossless forwarding class must be used in the fixed classifier on the native FC interfaces and in the classifier configuration on the Ethernet interfaces.

Fate Sharing

To ensure that congestion on one interface does not affect the fate of traffic on a native FC interface on which you remap priorities, avoid fate sharing (different traffic flows receiving the same CoS treatment) configurations.

You can avoid fate sharing by ensuring that the remapping priority (code point) on the native FC interface is classified only to the forwarding class used in the fixed classifier on all other interfaces. For example, if you configure a fixed classifier on an FC interface that classifies all of the traffic into lossless forwarding class myfcoe1 and remaps the

priority to priority 5 (IEEE 802.1p code point 101), then in all other classifier configurations on all other interfaces, priority 5 should always be classified to forwarding class myfcoe1. If you classify priority 6 on another interface to forwarding class myfcoe1, then congestion on priority 6 traffic affects priority 5 traffic unfairly.

Related Documentation

- Understanding CoS IEEE 802.1p Priorities for Lossless Traffic Flows on page 446
- Example: Configuring IEEE 802.1p Priority Remapping on an FCoE-FC Gateway on page 522
- Configuring CoS Fixed Classifier Rewrite Values for Native FC Interfaces (NP_Ports) on page 132

Example: Configuring IEEE 802.1p Priority Remapping on an FCoE-FC Gateway

FCoE traffic typically uses IEEE 802.1p priority 3 (code point 011). However, if your FCoE network uses a different IEEE 802.1p priority than priority 3 for FCoE traffic, then you can use priority remapping to classify FCoE traffic into a lossless forwarding class mapped to that priority. You specify the lossless forwarding class used for the FCoE traffic by configuring a fixed classifier and applying it to the native FC (NP_Port) interface. All traffic received from the FC SAN on that NP_Port interface is classified into the forwarding class specified in the fixed classifier.

When native FC interfaces on the FCoE-FC gateway encapsulate incoming FC traffic in Ethernet to create FCoE frames, by default they assign IEEE 802.1p code point 011 to the FCoE traffic, forward the traffic internally to the gateway Ethernet interfaces, and then forward the traffic to the FCoE network. Setting a rewrite value for the IEEE 802.1p code point configures the gateway native FC interface to assign the rewrite value priority to the FCoE frames when the native FC interface forwards the FCoE frames to the gateway Ethernet interface. Instead of a priority of 3, the FCoE frames use the priority specified in the rewrite value.

You can configure one rewrite value for each local FCoE-FC gateway fabric. All of the native FC interfaces in a particular fabric must use the same rewrite value. Native FC interfaces that belong to different FCoE-FC gateway fabrics can use different rewrite values.

This example shows how to configure FCoE priority remapping for a converged Ethernet network that uses priority 5 (IEEE code point 101) for FCoE traffic. If your network uses priority 3 for FCoE traffic, then you do not need to remap the FCoE priority, because the default configuration supports lossless FCoE transport on priority 3.

- Requirements on page 523
- Overview on page 523
- Configuration on page 526
- Verification on page 528

 Copyright © 2018, Juniper Networks, Inc.

Requirements

This example uses the following hardware and software components:

- One Juniper Networks QFX3500 Switch
- Junos OS Release 12.3 or later for the QFX Series

Overview

Native FC interfaces on an FCoE-FC gateway receive native FC traffic from the FC SAN and encapsulate it in Ethernet to create FCoE frames. Priority remapping enables you to map the encapsulated FC traffic (the FCoE traffic) to any IEEE 802.1p priority.

To support lossless FCoE traffic flows, you must configure the remapped priority correctly on the native FC interfaces and also on the Ethernet interfaces that connect to the FCoE network. Achieving lossless behavior for FCoE traffic when you remap the FCoE priority requires configuring:

- A lossless forwarding class for FCoE traffic (or using the default **fcoe** forwarding class)
- A behavior aggregate (BA) classifier on the FCoE Ethernet interfaces to map the FCoE forwarding class to the IEEE 802.1p code points (priority) used for FCoE traffic on the FCoE network (the ingress classifier priority for the forwarding class must be the same as the rewrite value priority)
- A fixed classifier on the FCoE-FC gateway FC interface that maps all traffic from the FC network into the lossless FCoE forwarding class (the forwarding class must be lossless)
- A priority rewrite value that remaps the IEEE 802.1p code point on the FCoE-FC gateway FC interface to the priority used for FCoE traffic on the FCoE network
- An input congestion notification profile (CNP) to enable priority-based flow control (PFC) on the FCoE code point (the code point used as the rewrite value) at the Ethernet interface ingress and an output CNP to configure flow control to pause the correct output queue at the Ethernet interface egress

  NOTE: **Configuring or changing PFC on an interface blocks the entire port until the PFC change is completed. After a PFC change is completed, the port is unblocked and traffic resumes. Blocking the port stops ingress and egress traffic, and causes packet loss on all queues on the port until the port is unblocked.**

- A DCBX application and application map on the Ethernet interface to support DCBX application TLV exchange for the lossless FCoE traffic on the FCoE priority

The priority specified in the BA classifier, CNP, and DCBX application map on the Ethernet ingress interfaces must match the priority specified in the fixed classifier and rewrite value configurations on the FC interfaces. You must specify the same lossless FCoE forwarding class in each configuration and use the same IEEE 802.1p code point (priority)

so that the FCoE traffic is properly classified into flows and so that those flows receive lossless treatment.

Topology

This example shows how to configure priority remapping of FCoE traffic on one native FC interface (fc-0/0/2) connected to the FC SAN and on one Ethernet interface (xe-0/0/27) connected to the converged Ethernet (FCoE) network. Both the native FC interface and the Ethernet interface belong to the same local FC fabric on the FCoE-FC gateway.

The converged Ethernet network uses priority 5 (IEEE 80.21p code point 101) for FCoE traffic. The native FC interface on the FCoE-FC gateway receives FC traffic from the FC SAN. The native FC interface encapsulates the FC traffic in Ethernet to create FCoE frames, tags the frames with the IEEE 802.1p priority value 101, and then forwards the FCoE frames to the FCoE-FC gateway Ethernet interface. Because traffic marked with IEEE 802.1p priority 5 is mapped to a lossless FCoE forwarding class, the traffic receives lossless treatment. The Ethernet interface forwards the FCoE traffic on to the Ethernet network.

FCoE traffic (tagged with priority 5) arriving at the FCoE-FC gateway from the Ethernet network receives lossless treatment and is forwarded to the native FC interface. The native FC interface removes the Ethernet encapsulation from the FCoE frames and forwards the resulting native FC traffic to the FC SAN.

Figure 25 on page 524 shows the topology for this example, and Table 102 on page 524 shows the configuration components for this example.

Figure 25: Topology of the IEEE 802.1p Priority Remapping Example

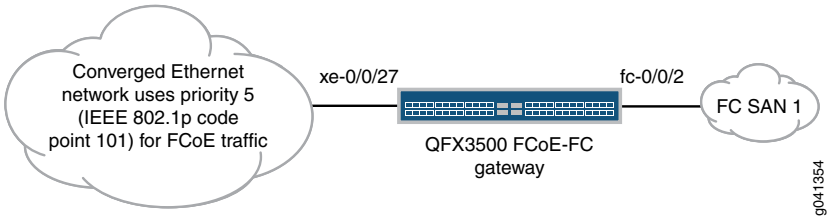

Table 102: Components of the IEEE 802.1p Priority Remapping Configuration Topology

Component	Settings
Hardware	QFX3500 switch
Forwarding class configuration	Name—**fcoe1** Queue mapping—queue **5** Packet drop attribute—**no-loss** NOTE: The lossless forwarding class can be mapped to any output queue. However, because FCoE uses priority 5 in this example, matching that traffic to a forwarding class that uses queue 5 creates a configuration that is logical and easy to map because the priority and the queue are identified by the same number.

Copyright © 2018, Juniper Networks, Inc.

Table 102: Components of the IEEE 802.1p Priority Remapping Configuration Topology (continued)

Component	Settings
BA classifier (Ethernet interface)	Name—**fcoe_gw_classifier** Maps code point **101** (IEEE 802.1p priority 5) to the **fcoe1** forwarding class and assigns traffic a packet loss priority of **low**. The classifier is applied to Ethernet interface **xe-0/0/27**.
Fixed classifier (native FC interface)	Forwarding class—**fcoe1** The classifier is applied to native FC interface **fc-0/0/2**
Rewrite value	IEEE 802.1p code point—**101** The rewrite value is applied to native FC interface **fc-0/0/2**
PFC configuration (CNP on Ethernet interface)	Name—**fcoe1_p5_rewrite_cnp** Input CNP code point—**101** Output CNP code point—**101** Output CNP flow control queue—**5** Interface—**xe-0/0/27**
DCBX application mapping	Application name—**myfcoe5** Application ether-type—**0x8906** Application map name—**myfcoe5_map** Application map code points—**101** Interface—**xe-0/0/27** NOTE: LLDP and DCBX must be enabled on the interface. By default, LLDP and DCBX are enabled on all Ethernet interfaces.

The priority used to identify FCoE traffic (5, IEEE 802.1p code point 101) is configured for lossless transport across the QFX device on interfaces xe-0/0/27 and fc-0/0/2, which belong to the same local FC fabric on the FCoE-FC gateway.

On the Ethernet interface, the classifier maps priority 5 to a lossless forwarding class (fcoe1), the input CNP enables PFC on incoming priority 5 traffic, and the output CNP enables output queue 5 to respond to pause messages received from the peer on traffic tagged with priority 5. On the native FC interface, FC traffic is remapped from priority 3 (the default mapping) to priority 5 and assigned to the same lossless forwarding class, fcoe1, because of the fixed classifier configuration. In this way, traffic tagged with priority 5 on interfaces xe-0/0/27 and fc-0/0/2 receives lossless treatment.

NOTE: To avoid fate sharing, ensure that the remapped priority is classified only to the forwarding class used in the fixed classifier on all other interfaces. For example, if you configure a fixed classifier on an FC interface that classifies all of the traffic into lossless forwarding class fcoe1 and remaps the priority to priority 5 (IEEE 802.1p code point 101), then in all other classifier configurations on all other interfaces, priority 5 should always be classified to forwarding class fcoe1. If you classify priority 6 on another interface to forwarding class fcoe1, then congestion on priority 6 traffic affects priority 5 traffic unfairly.

NOTE: This example does not include scheduling (bandwidth allocation) configuration or the local FC fabric configuration. This examples focuses only on priority remapping.

Configuration

CLI Quick Configuration

To quickly configure IEEE 802.1p priority remapping on an FCoE-FC gateway, copy the following commands, paste them in a text file, remove line breaks, change variables and details to match your network configuration, and then copy and paste the commands into the CLI at the **[edit]** hierarchy level.

```
set class-of-service forwarding-classes class fcoe1 queue-num 5 no-loss
set class-of-service classifiers ieee-802.1 fcoe_gw_classifier forwarding-class fcoe1 loss-priority
low code-points 101
set class-of-service interfaces xe-0/0/27 unit 0 classifiers ieee-802.1 fcoe_gw_classifier
set class-of-service interfaces fc-0/0/2 forwarding-class fcoe1
set class-of-service interfaces fc-0/0/2 rewrite-value input ieee-802.1p code-point 101
set class-of-service congestion-notification-profile fcoe1_p5_rewrite_cnp input ieee-802.1
code-point 101 pfc
set class-of-service congestion-notification-profile fcoe1_p5_rewrite_cnp output ieee-802.1
code-point 101 flow-control-queue 5
set class-of-service interfaces xe-0/0/27 congestion-notification-profile fcoe1_p5_rewrite_cnp
set applications application myfcoe5 ether-type 0x8906
set policy-options application-maps myfcoe5_app_map application myfcoe5 code-points 101
set protocols dcbx interface xe-0/0/27 application-map myfcoe5_app_map
```

Step-by-Step Procedure

To configure a lossless forwarding class for FCoE traffic, classify FCoE traffic into that forwarding class, configure a rewrite value on the native FC interface for the FCoE traffic, and enable PFC on the Ethernet interface, and configure DCBX application protocol TLV exchange for FCoE traffic:

1. Configure the lossless forwarding class (named **fcoe1** and mapped to output queue **5**) for FCoE traffic that uses IEEE 802.1p priority 5:

   ```
   [edit class-of-service]
   user@switch# set forwarding-classes class fcoe1 queue-num 5 no-loss
   ```


Copyright © 2018, Juniper Networks, Inc.

2. Configure an ingress classifier named **fcoe_gw_classifier** to map the FCoE priority (IEEE 802.1p code point **101**) to the lossless FCoE forwarding class (**fcoe1**):

```
[edit class-of-service classifiers]
user@switch# set ieee-802.1 fcoe_gw_classifier forwarding-class fcoe1 loss-priority low
code-points 101
```

3. Apply the classifier named **fcoe_gw_classifier** to Ethernet interface **xe-0/0/27**:

```
[edit class-of-service]
user@switch# set interfaces xe-0/0/27 unit 0 classifiers ieee-802.1 fcoe_gw_classifier
```

4. Configure the fixed classifier on the native FC interface, using the lossless FCoE forwarding class **fcoe1** (all traffic from the FC SAN is classified into the specified forwarding class). The traffic classified into this forwarding class is tagged with the priority value configured in the next step.

```
[edit class-of-service]
user@switch# set interfaces fc-0/0/2 forwarding-class fcoe1
```

5. Configure the rewrite value (IEEE 802.1p code point **101**) applied to all incoming traffic from the FC SAN on the native FC interface. The rewrite value is the IEEE 802.1p priority that the encapsulated FCoE traffic classified into the **fcoe1** forwarding class uses on the converged Ethernet network.

```
[edit class-of-service]
user@switch# set interfaces fc-0/0/2 rewrite-value input ieee-802.1p code-point 101
```

6. Configure the input stanza of the CNP (named **fcoe1_p5_rewrite_cnp**) to enable PFC on the FCoE priority on the Ethernet interface:

```
[edit class-of-service]
user@switch# set congestion-notification-profile fcoe1_p5_rewrite_cnp input ieee-802.1
code-point 101 pfc
```

7. Configure the output stanza of the CNP to enable output queue 5 to respond to pause messages received from the peer on traffic tagged with priority 5:

```
[edit class-of-service]
user@switch# set congestion-notification-profile fcoe1_p5_rewrite_cnp output ieee-802.1
code-point 101 flow-control-queue 5
```

8. Apply the CNP named **fcoe1_p5_rewrite_cnp** to Ethernet interface **xe-0/0/27**:

```
[edit class-of-service]
user@switch# set interfaces xe-0/0/27 congestion-notification-profile fcoe1_p5_rewrite_cnp
```

9. Configure a DCBX application for FCoE to map to the Ethernet interface, so that DCBX can exchange application protocol TLVs on the correct (remapped) IEEE 802.1p FCoE priority:

```
[edit]
user@switch# set applications application myfcoe5 ether-type 0x8906
```

10. Configure a DCBX application map to map the FCoE application to the correct (remapped) IEEE 802.1p FCoE priority:

```
[edit]
user@switch# set policy-options application-maps myfcoe5_app_map application myfcoe5
code-points 101
```

11. Apply the application map to the Ethernet interface so that DCBX exchanges FCoE application TLVs on the correct code point:

```
[edit]
user@switch# set protocols dcbx interface xe-0/0/27 application-map myfcoe5_app_map
```

Verification

To verify the configuration and proper operation of IEEE 802.1p priority remapping on an FCoE-FC gateway, perform these tasks:

- Verifying the Forwarding Class Configuration on page 528
- Verifying the Behavior Aggregate Classifier Configuration on page 529
- Verifying the FC Interface Configuration (Fixed Classifier, Rewrite Value) on page 530
- Verifying the Ethernet Interface PFC Configuration (CNP) on page 530
- Verifying the Ethernet Interface Configuration on page 531
- Verifying the DCBX Application Configuration on page 531
- Verifying the DCBX Application Map Configuration on page 532
- Verifying the DCBX Application Protocol Exchange Interface Configuration on page 532

Verifying the Forwarding Class Configuration

Purpose Verify that the lossless forwarding class **fcoe1** has been created.

Copyright © 2018, Juniper Networks, Inc.

Action Show the forwarding class configuration by using the operational command **show class-of-service forwarding class**:

```
user@switch# show class-of-service forwarding-class
Forwarding class                      ID      Queue  Policing priority  No-Loss

  best-effort                         0        0         normal        Disabled

  fcoe                                1        3         normal        Enabled

  no-loss                             2        4         normal        Enabled

  network-control                     3        7         normal        Disabled

  fcoe1                               4        5         normal        Enabled

  mcast                               8        8         normal        Disabled
```

Meaning The **show class-of-service forwarding-class** command shows all of the forwarding classes. The command output shows that the **fcoe1** forwarding class is configured on output queue **5** with the no-loss packet drop attribute enabled.

Because we did not explicitly configure the default forwarding classes, they remain in their default state, including the lossless configuration of the **fcoe** and **no-loss** default forwarding classes.

Verifying the Behavior Aggregate Classifier Configuration

Purpose Verify that the classifier maps the forwarding classes to the correct IEEE 802.1p code points (priorities) and packet loss priorities.

Action List the classifier configured for priority remapping using the operational mode command **show class-of-service classifier name fcoe_gw_classifier**:

```
user@switch> show class-of-service classifier name fcoe_gw_classifier
Classifier: fcoe_gw_classifier, Code point type: ieee-802.1, Index: 13100
  Code point         Forwarding class                    Loss priority
  101                fcoe1                               low
```

Meaning The **show class-of-service classifier name fcoe_gw_classifier** command shows the IEEE 802.1p code points and the loss priorities that are mapped to the forwarding classes in the classifier. The command output shows that the classifier maps forwarding class **fcoe1** to IEEE 802.1p code point **101** (priority 5) with a packet loss priority of **low**.

Verifying the FC Interface Configuration (Fixed Classifier, Rewrite Value)

Purpose Verify that the native FC interface (NP_Port) classifies incoming traffic into forwarding class **fcoe1** and that the interface rewrite value is priority 5 (IEEE code point 101).

Action Display the FC interface configuration using the operational mode command **show configuration class-of-service interfaces fc-0/0/2**:

```
user@switch> show configuration class-of-service interfaces fc-0/0/2
rewrite-value {
    input {
        ieee-802.1 {
            code-point {
                101;
            }
        }
    }
}
forwarding-class fcoe1;
```

Meaning The **show configuration class-of-service interfaces fc-0/0/2** command shows that the rewrite value for incoming (input) traffic is IEEE 802.1p code point **101** (priority 5), and that the interface uses forwarding class **fcoe1** as the fixed classifier for all incoming traffic.

Verifying the Ethernet Interface PFC Configuration (CNP)

Purpose Verify that PFC is enabled on the correct priority (IEEE 802.1p code point **101**) for lossless transport and that flow control is enabled on the correct output queue (queue **5**) on the Ethernet interface.

Action List the congestion notification profile using the operational mode command **show class-of-service congestion-notification fcoe1_p5_rewrite_cnp**:

```
user@switch> show class-of-service congestion-notification fcoe1_p5_rewrite_cnp
Name: fcoe1_p5_rewrite_cnp, Index: 7061
Type: Input
Cable Length: 100 m
  Priority     PFC          MRU
  000          Disabled
  001          Disabled
  010          Disabled
  011          Disabled
  100          Disabled
  101          Enabled      2500
  110          Disabled
  111          Disabled
Type: Output
  Priority     Flow-Control-Queues
```

 Copyright © 2018, Juniper Networks, Inc.

```
101
                5
```

Meaning The **show class-of-service congestion-notification fcoe1_p5_rewrite_cnp** command shows the input and output stanzas of the CNP. The input stanza shows that PFC is enabled on IEEE 802.1p code point 101 (priority 5). The input stanza also shows that the CNP uses the default values of 100 meters for the cable length value and 2500 bytes for the maximum receive unit (MRU) value.

The output stanza shows that flow control is enabled on output queue **5** for IEEE 802.1p priority code point **101** (priority 5).

Verifying the Ethernet Interface Configuration

Purpose Verify that the classifier **fcoe_gw_classifier** and the congestion notification profile **fcoe1_p5_rewrite_cnp** are configured on Ethernet interface **xe-0/0/27**.

Action List the ingress interfaces using the operational mode command **show configuration class-of-service interfaces xe-0/0/27**:

```
user@switch> show configuration class-of-service interfaces xe-0/0/27
congestion-notification-profile fcoe1_p5_rewrite_cnp;
unit 0 {
    classifiers {
        ieee-802.1 fcoe_gw_classifier;
    }
}
```

Meaning The **show configuration class-of-service interfaces xe-0/0/27** command shows that the congestion notification profile **fcoe1_p5_rewrite_cnp** is configured on the interface, and that the IEEE 802.1p classifier associated with the interface is **fcoe_gw_classifier**.

Verifying the DCBX Application Configuration

Purpose Verify that the DCBX application named **myfcoe5** for FCoE is configured.

Action List the DCBX applications by using the configuration mode command **show applications**:

```
user@switch# show applications
application myfcoe5 {
    ether-type 0x8906;
}
```

Meaning The **show applications** configuration mode command shows all of the configured applications. The output shows that the application **myfcoe5** is configured with an EtherType of **0x8906** (the correct EtherType for FCoE traffic).

Verifying the DCBX Application Map Configuration

Purpose Verify that the application map **myfcoe5_app_map** is configured.

Action List the application map by using the configuration mode command **show policy-options application-maps**:

```
user@switch# show policy-options application-maps
```

```
myfcoe5_app_map {
    application myfcoe5 code-points 101;
}
```

Meaning The **show policy-options application-maps** configuration mode command lists all of the configured application maps and the applications that belong to each application map. The output shows that there is one application map, **myfcoe5_app_map**, which consists of the application named **myfcoe5** mapped to IEEE 802.1p code point **101** (priority 5).

Verifying the DCBX Application Protocol Exchange Interface Configuration

Purpose Verify that the application map is applied to the correct interface (**xe-0/0/27**).

Action List the application maps using the configuration mode command **show protocols dcbx**:

```
user@switch# show protocols dcbx
```

```
interface xe-0/0/27.0 {
    application-map myfcoe5_app_map;
}
```

Meaning The **show protocols dcbx** configuration mode command lists the application map association with interfaces. The output shows that interface **xe-0/0/27** uses application map **myfcoe5_app_map**.

Related Documentation

- Example: Configuring DCBX Application Protocol TLV Exchange on page 553
- Example: Configuring Unicast Classifiers on page 72
- Configuring CoS PFC (Congestion Notification Profiles) on page 429
- Configuring CoS Fixed Classifier Rewrite Values for Native FC Interfaces (NP_Ports) on page 132
- Understanding CoS IEEE 802.1p Priority Remapping on an FCoE-FC Gateway on page 519

 Copyright © 2018, Juniper Networks, Inc.

Understanding DCBX

Data Center Bridging Capability Exchange protocol (DCBX) is an extension of Link Layer Data Protocol (LLDP). If you disable LLDP on an interface, that interface cannot run DCBX. If you attempt to enable DCBX on an interface on which LLDP is disabled, the configuration commit operation fails. Data center bridging (DCB) devices use DCBX to exchange configuration information with directly connected peers.

Video: What is DCBX Protocol?

This topic describes:

- DCBX Basics on page 533
- DCBX Modes and Support on page 534
- DCBX Attribute Types on page 537
- DCBX Application Protocol TLV Exchange on page 538
- DCBX and PFC on page 539
- DCBX and ETS on page 539

DCBX Basics

DCBX can:

- Discover the DCB capabilities of peers.
- Detect DCB feature misconfiguration or mismatches between peers.
- Configure DCB features on peers.

You can configure DCBX operation for priority-based flow control (PFC), Layer 2 and Layer 4 applications such as FCoE and iSCSI, and ETS. DCBX is enabled or disabled on a per-interface basis.

NOTE: **QFX5200 and QFX5210 switches do not support enhanced transmission selection (ETS) hierarchical scheduling. Use port scheduling to manage bandwidth on these switches.**

By default, for PFC and ETS, DCBX automatically negotiates administrative state and configuration with each interface's connected peer. To enable DCBX negotiation for applications, you must configure the applications, map them to IEEE 802.1p code points in an application map, and apply the application map to interfaces.

The FCoE application only needs to be included in an application map when you want an interface to exchange type, length, and values (TLVs) for other applications in addition to FCoE. If FCoE is the only application you want an interface to advertise, then you do not need to use an application map. For ETS, DCBX pushes the switch configuration to

peers if they are set to learn the configuration from the switch (unless you disable sending the ETS recommendation TLV on interfaces in IEEE DCBX mode).

You can override the default behavior for PFC, for ETS, or for all applications mapped to an interface by turning off autonegotiation to force an interface to enable or disable that feature. You can also disable DCBX autonegotiation for applications on an interface by excluding those applications from the application map you apply to that interface or by deleting the application map from the interface.

The default autonegotiation behavior for applications that are mapped to an interface is:

- DCBX is enabled on the interface if the connected peer device also supports DCBX.
- DCBX is disabled on the interface if the connected peer device does not support DCBX.

During negotiation of capabilities, the switch can push the PFC configuration to an attached peer if the peer is configured as “willing” to learn the PFC configuration from other peers. The Juniper Networks switch does not support self autoprovisioning and does not change its configuration during autonegotiation to match the peer configuration. (The Juniper switch is not “willing” to learn the PFC configuration from peers.)

NOTE: **When a port with DCBX enabled begins to exchange type, length, and value (TLV) entries, optional LLDP TLVs on that port are not advertised to neighbors, so that the switch can interoperate with a wider variety of converged network adapters (CNAs) and Layer 2 switches that support DCBX.**

DCBX Modes and Support

This section describes DCBX support:

- DCBX Modes (Versions) on page 534
- Autonegotiation on page 536
- CNA Support for DCBX Modes on page 536
- Interface Support for DCBX on page 537

DCBX Modes (Versions)

The two most common DCBX modes are supported:

- IEEE DCBX—The newest DCBX version. Different TLVs have different subtypes (for example, the subtype for the ETS configuration TLV is 9); the IEEE DCBX Organizationally Unique Identifier (OUI) is 0x0080c2.
- DCBX version 1.01—The Converged Enhanced Ethernet (CEE) version of DCBX. It has a subtype of 2 and an OUI of 0x001b21.

IEEE DCBX and DCBX version 1.01 differ mainly in frame format. DCBX version 1.01 uses one TLV that includes all DCBX attribute information, which is sent as sub-TLVs. IEEE DCBX uses a unique TLV for each DCB attribute.

 Copyright © 2018, Juniper Networks, Inc.

NOTE: The switch does not support pre-CEE (pre-DCB) DCBX versions. Unsupported older versions of DCBX have a subtype of 1 and an OUI of 0x001b21. The switch drops LLDP frames that contain pre-CEE DCBX TLVs.

Table 103 on page 535 summarizes the differences between IEEE DCBX and DCBX version 1.01, including show command output:

Table 103: Summary of Differences Between IEEE DCBX and DCBX Version 1.01

Characteristic	IEEE DCBX	DCBX Version 1.01
OUI	0x0080c2	0x001b21
Frame Format	Sends a separate, unique TLV for each DCBX attribute. For example, IEEE DCBX uses separate TLVs for ETS, PFC, and each application. Configuration and Recommendation information is sent in different TLVs	Sends one TLV that includes all DCBX attribute information organized in sub-TLVs. The “willing” bit determines whether or not an interface can change its configuration to match the connected peer.
Symmetric/asymmetric configuration with peer	Asymmetric or symmetric	Symmetric only
Differences in the **show dcbx interface** ***interface-name*** operational command	• Synchronization information is not shown because symmetric configuration is not required. • Operational state information is not shown because the operational states do not have to be symmetric. • TLV type is shown because unique TLVs are sent for each DCBX attribute. • ETS peer Configuration TLV and Recommendation TLV information is shown separately because they are different TLVs.	• Synchronization information is shown because symmetric configuration is required. • Operational state information is shown because the operational states do have to be symmetric. • TLV type is not shown because one TLV is used for all attribute information. • Recommendation TLV is not sent (DCBX Version 1.01 uses the “willing” bit to determine whether or not an interface uses the peer interface configuration).

You can configure interfaces to use the following DCBX modes:

- IEEE DCBX—The interface uses IEEE DCBX regardless of the configuration on the connected peer.
- DCBX version 1.01—The interface uses DCBX version 1.01 regardless of the configuration on the connected peer.
- Autonegotiation—The interface automatically negotiates with the connected peer to determine the DCBX version the peers use. Autonegotiation is the default DCBX mode.

Copyright © 2018, Juniper Networks, Inc.

If you configure a DCBX mode on an interface, the interface ignores DCBX protocol data units (PDUs) it receives from the connected peer if the PDUs do not match the DCBX version configured on the interface. For example, if you configure an interface to use IEEE DCBX and the connected peer sends DCBX version 1.01 LLDP PDUs, the interface ignores the version 1.01 PDUs. If you configure an interface to use DCBX version 1.01 and the peer sends IEEE DCBX LLDP PDUs, the interface ignores the IEEE DCBX PDUs.

NOTE: **On interfaces that use the IEEE DCBX mode, the show dcbx neighbors interface *interface-name* operational command does not include application, PFC, or ETS operational state in the output.**

Autonegotiation

Autonegotiation is the default DCBX mode. Each interface automatically negotiates with its connected peer to determine the DCBX version that both interfaces use to exchange DCBX information.

When an interface connects to its peer interface, the interface advertises IEEE DCBX TLVs to the peer. If the interface receives one IEEE DCBX PDU from the peer, the interface sets the DCBX mode as IEEE DCBX. If the interface receives three DCBX version 1.01 TLVs from the peer, the interface sets DCBX version 1.01 as the DCBX mode.

Autonegotiation works slightly differently on standalone switches compared to QFabric systems:

- Standalone switches—When an interface connects to its peer interface, the interface advertises IEEE DCBX TLVs to the peer. If the interface receives an IEEE DCBX TLV from the peer, the interface sets IEEE DCBX as the DCBX mode. If the interface receives three consecutive DCBX version 1.01 TLVs from the peer, the interface sets DCBX version 1.01 as the DCBX mode.
- QFabric system—When an interface connects to its peer interface, the interface advertises DCBX version 1.01 TLVs to the peer. If the interface receives an IEEE DCBX TLVs from the peer, the interface sets IEEE DCBX as the DCBX mode. If the interface receives three consecutive DCBX version 1.01 TLVs from the peer, the interface retains DCBX version 1.01 as the DCBX mode.

NOTE: **If the link flaps or the LLDP process restarts, the interface starts the autonegotiation process again. The interface does not use the last received DCBX communication mode.**

CNA Support for DCBX Modes

Different CNA vendors support different versions and capabilities of DCBX. The DCBX configuration you use on switch interfaces depends on the DCBX features that the CNAs in your network support.

Copyright © 2018, Juniper Networks, Inc.

Interface Support for DCBX

You can configure DCBX on 10-Gigabit Ethernet interfaces and on link aggregation group (LAG) interfaces whose member interfaces are all 10-Gigabit Ethernet interfaces.

DCBX Attribute Types

DCBX has three attribute types:

- Informational—These attributes are exchanged using LLDP, but do not affect DCBX state or operation; they only communicate information to the peer. For example, application priority TLVs are informational TLVs.
- Asymmetric—The values for these types of attributes do not have to be the same on the connected peer interfaces. Peers exchange asymmetric attributes when the attribute values can differ on each peer interface. The peer interface configurations might match or they might differ. For example, ETS Configuration and Recommendation TLVs are asymmetric TLVs.
- Symmetric—The intention is that the values for these types of attributes should be the same on both of the connected peer interfaces. Peer interfaces exchange symmetric attributes to ensure symmetric DCBX configuration for those attributes. For example, PFC Configuration TLVs are symmetric TLVs.

The following sections describe asymmetric and symmetric DCBX attributes:

- Asymmetric Attributes on page 537
- Symmetric Attributes on page 538

Asymmetric Attributes

DCBX passes asymmetric attributes between connected peer interfaces to communicate parameter information about those attributes (features). The resulting configuration for an attribute might be different on each peer, so the parameters configured on one interface might not match the parameters on the connected peer interface.

There are two types of asymmetric attribute TLVs:

- Configuration TLV—Configuration TLVs communicate the current operational state and the state of the “willing” bit. The “willing” bit communicates whether or not the interface is willing to accept and use the configuration from the peer interface. If an interface is “willing,” the interface uses the configuration it receives from the peer interface. (The peer interface configuration can override the configuration on the “willing” interface.) If an interface is “not willing”, the configuration on the interface cannot be overridden by the peer interface configuration.
- Recommendation TLV—Recommendation TLVs communicate the parameters the interface recommends that the connected peer interface should use. When an interface sends a Recommendation TLV, if the connected peer is “willing,” the connected peer changes its configuration to match the parameters in the Recommendation TLV.

Copyright © 2018, Juniper Networks, Inc.

Symmetric Attributes

DCBX passes symmetric attributes between connected peer interfaces to communicate parameter information about those attributes (features), with the objective that both interfaces should use the same configuration. The intent is that the parameters configured on one interface should match the parameters on the connected peer interface.

There is one type of symmetric attribute TLV, the Configuration TLV. As with asymmetric attributes, symmetric attribute Configuration TLVs communicate the current operational state and the state of the "willing" bit. "Willing" interfaces use the peer interface parameter values for the attribute. (The attribute configuration of the peer overrides the configuration on the "willing" interface.)

DCBX Application Protocol TLV Exchange

DCBX advertises the switch's capabilities for Layer 2 applications such as FCoE and Layer 4 applications such as iSCSI:

- Application Protocol TLV Exchange on page 538
- FCoE Application Protocol TLV Exchange on page 538
- Disabling Application Protocol TLV Exchange on page 539

Application Protocol TLV Exchange

For all applications, DCBX advertises the application's state and IEEE 802.1p code points on the interfaces to which the application is mapped. If an application is not mapped to an interface, that interface does not advertise the application's TLVs. There is an exception for FCoE application protocol TLV exchange when FCoE is the only application you want DCBX to advertise on an interface.

FCoE Application Protocol TLV Exchange

Protocol TLV exchange for the FCoE application depends on whether FCoE is the only application you want the interface to advertise or whether you want the interface to exchange other application TLVs in addition to FCoE TLVs.

If FCoE is the only application you want DCBX to advertise on an interface, DCBX exchanges FCoE application protocol TLVs by default if the interface:

- Carries FCoE traffic (traffic mapped by CoS configuration to the FCoE forwarding class)
- Has a congestion notification profile with PFC enabled on the FCoE priority (IEEE 802.1p code point)
- Does *not* have an application map

NOTE: **If no CoS configuration for FCoE is mapped to an interface, that interface does not exchange FCoE application protocol TLVs.**

Copyright © 2018, Juniper Networks, Inc.

If you want DCBX to advertise FCoE and other applications on an interface, you must specify all of the applications, including FCoE, in an application map, and apply the application map to the desired interfaces.

NOTE: **If an application map is applied to an interface, the FCoE application must be explicitly configured in the application map, or the interface does not exchange FCoE TLVs.**

When DCBX advertises the FCoE application, it advertises the FCoE state and IEEE 802.1p code points. If a peer device connected to a switch interface does not support FCoE, DCBX uses autonegotiation to mark the interface as "FCoE down," and FCoE is disabled on that interface.

Disabling Application Protocol TLV Exchange

To disable DCBX application protocol exchange for all applications on an interface, issue the **set protocols dcbx interface *interface-name* applications no-auto-negotiation** command.

You can also disable DCBX application protocol exchange for applications on an interface by deleting the application map from the interface, or by deleting a particular application from the application map. However, when you delete an application from an application map, the application protocol is no longer exchanged on any interface which uses that application map.

DCBX and PFC

After you enable PFC on a switch interface, DCBX uses autonegotiation to control the operational state of the PFC functionality.

If the peer device connected to the interface supports PFC and is provisioned compatibly with the switch, DCBX sets the PFC operational state to enabled. If the peer device connected to the interface does not support PFC or is not provisioned compatibly with the switch, DCBX sets the operational state to disabled. (PFC must be symmetrical.)

If the peer advertises that it is "willing" to learn its PFC configuration from the switch, DCBX pushes the switch's PFC configuration to the peer and does not check the peer's administrative state.

You can manually override DCBX control of the PFC operational state on a per-interface basis by disabling autonegotiation. If you disable autonegotiation on an interface on which you have configured PFC, then PFC is enabled on that interface regardless of the peer configuration. To disable PFC on an interface, do not configure PFC on that interface.

DCBX and ETS

This section describes:

- Default DCBX ETS Advertisement on page 540
- ETS Advertisement and Peer Configuration on page 540
- ETS Recommendation TLV on page 540

Default DCBX ETS Advertisement

If you do not configure ETS on an interface, the switch automatically creates a default priority group that contains all of the priorities (forwarding classes, which represent output queues) and assigns 100 percent of the port output bandwidth to that priority group. The default priority group is transparent. It does not appear in the configuration and is used for DCBX advertisement. DCBX advertises the default priority group, its priorities, and the assigned bandwidth.

If you configure ETS on an interface, DCBX advertises:

- Each priority group on the interface
- The priorities in each priority group
- The bandwidth properties of each priority group and priority

Any priority on that interface that is not part of an explicitly configured priority group (forwarding class set) is assigned to the automatically generated default priority group and receives no bandwidth. If you configure ETS on an interface, every forwarding class (priority) on that interface for which you want to forward traffic must belong to a forwarding class set (priority group).

ETS Advertisement and Peer Configuration

DCBX does not control the switch's ETS (hierarchical scheduling) operational state. If the connected peer is configured as "willing," DCBX pushes the switch's ETS configuration to the switch's peers if the ETS Recommendation TLV is enabled (it is enabled by default). If the peer does not support ETS or is not consistently provisioned with the switch, DCBX does not change the ETS operational state on the switch. The ETS operational state remains enabled or disabled based only on the switch hierarchical scheduling configuration and is enabled by default.

When ETS is configured, DCBX advertises the priority groups, the priorities in the priority groups, and the bandwidth configuration for the priority groups and priorities. Any priority (essentially a forwarding class or queue) that is not part of a priority group has no scheduling properties and receives no bandwidth.

You can manually override whether DCBX advertises the ETS state to the peer on a per-interface basis by disabling autonegotiation. This does not affect the ETS state on the switch or on the peer , but it does prevent the switch from sending the Recommendation TLV or the Configuration TLV to the connected peer. To disable ETS on an interface, do not configure priority groups (forwarding class sets) on the interface.

ETS Recommendation TLV

The ETS Recommendation TLV communicates the ETS settings that the switch wants the connected peer interface to use. If the peer interface is "willing," it changes its configuration to match the configuration in the ETS Recommendation TLV. By default, the switch interfaces send the ETS Recommendation TLV to the peer. The settings communicated are the egress ETS settings defined by configuring hierarchical scheduling on the interface.

Copyright © 2018, Juniper Networks, Inc.

We recommend that you use the same ETS settings on the connected peer that you use on the switch interface and that you leave the ETS Recommendation TLV enabled. However, on interfaces that use IEEE DCBX as the DCBX mode, if you want an asymmetric configuration between the switch interface and the connected peer, you can disable the ETS Recommendation TLV by including the **no-recommendation-tlv** statement at the **[edit protocols dcbx interface *interface-name* enhanced-transmission-selection]** hierarchy level.

NOTE: **You can disable the ETS Recommendation TLV only when the DCBX mode on the interface is IEEE DCBX. Disabling the ETS Recommendation TLV has no effect if the DCBX mode on the interface is DCBX version 1.01. (IEEE DCBX uses separate application attribute TLVs, but DCBX version 1.01 sends all application attributes in the same TLV and uses sub-TLVs to separate the information.)**

If you disable the ETS Recommendation TLV, the switch still sends the ETS Configuration TLV to the connected peer. The result is that the connected peer is informed about the switch DCBX ETS configuration, but even if the peer is "willing," the peer does not change its configuration to match the switch configuration. This is asymmetric configuration—the two interfaces can have different parameter values for the ETS attribute.

For example, if you want a CNA connected to a switch interface to have different bandwidth allocations than the switch ETS configuration, you can disable the ETS Recommendation TLV and configure the CNA for the desired bandwidth. The switch interface and the CNA exchange configuration parameters, but the CNA does not change its configuration to match the switch interface configuration.

Related Documentation

- Understanding DCBX Application Protocol TLV Exchange on page 546
- Understanding DCB Features and Requirements on page 376
- Understanding CoS Flow Control (Ethernet PAUSE and PFC) on page 414
- Understanding CoS Hierarchical Port Scheduling (ETS) on page 192
- *Understanding CoS Port Schedulers on QFX Switches*
- *Understanding FCoE*
- Configuring the DCBX Mode on page 542
- Configuring DCBX Autonegotiation on page 543
- Disabling the ETS Recommendation TLV on page 413
- Example: Configuring DCBX Application Protocol TLV Exchange on page 553

Configuring the DCBX Mode

You can configure the DCBX mode that an interface uses to communicate with the connected peer. Three DCBX modes are supported:

- Autonegotiation—The interface negotiates with the connected peer to determine the DCBX mode. This is the default DCBX mode.
- IEEE DCBX—The interface uses IEEE DCBX type, length, and value (TLV) to exchange DCBX information with the connected peer. QFX3500 Node devices come up with IEEE DCBX enabled by default and then autonegotiate with the connected peer to determine the final DCBX mode.
- DCBX Version 1.01—The interface uses Converged Enhanced Ethernet (CEE) DCBX version 1.01 TLVs to exchange DCBX information with the connected peer. QFabric system Node devices other than QFX3500 switches come up with DCBX version 1.01 enabled by default and then autonegotiate with the connected peer to determine the final DCBX mode.

NOTE: **Pre-CEE (pre-DCB) versions of DCBX such as DCBX version 1.00 are not supported. If an interface receives an LLDP frame with pre-CEE DCBX TLVs, the system drops the frame.**

Configure the DCBX mode by specifying the mode for one interface or for all interfaces.

- To configure the DCBX mode, specify the interface and the mode:

  ```
  [edit protocols dcbx]
  user@switch# set interface interface-name dcbx-version (auto-negotiate | ieee-dcbx |
  dcbx-version-1.01)
  ```

  For example, to configure DCBX version 1.01 on interface **xe-0/0/21**:

  ```
  user@switch# set protocols dcbx interface xe-0/0/21 dcbx-version dcbx-version-1.01
  ```

  To configure IEEE DCBX on all interfaces:

  ```
  user@switch# set protocols dcbx interface all dcbx-version ieee-dcbx
  ```

Related Documentation

- Configuring DCBX Autonegotiation on page 543
- Disabling the ETS Recommendation TLV on page 413
- Understanding DCBX on page 533
- Understanding DCBX Application Protocol TLV Exchange on page 546
- **show dcbx neighbors on page 991**

Copyright © 2018, Juniper Networks, Inc.

Configuring DCBX Autonegotiation

Data Center Bridging Capability Exchange protocol (DCBX) discovers the data center bridging (DCB) capabilities of peers by exchanging feature configuration information. DCBX also detects feature misconfiguration and mismatches, and can configure DCB on peers. DCBX is an extension of the Link Layer Discovery Protocol (LLDP), and LLDP must remain enabled on every interface for which you want to use DCBX. If you attempt to enable DCBX on an interface on which LLDP is disabled, the configuration commit operation fails.

NOTE: **LLDP and DCBX are enabled by default on all interfaces.**

The switch supports DCBX autonegotiation for:

- Priority-based flow control (PFC) configuration
- Layer 2 and Layer 4 applications such as Fibre Channel over Ethernet (FCoE) and Internet Small Computer System Interface (iSCSI)
- Enhanced transmission selection (ETS) advertisement

DCBX autonegotiation is configured on a per-interface basis for each supported feature or application. The PFC and application DCBX exchanges use autonegotiation by default. The default autonegotiation behavior is:

- DCBX is enabled on the interface if the connected peer device also supports DCBX.
- DCBX is disabled on the interface if the connected peer device does not support DCBX.

You can override the default behavior for each feature by turning off autonegotiation to force an interface to enable or disable the feature.

Autonegotiation of ETS means that when ETS is enabled on an interface (priority groups are configured), the interface advertises its ETS configuration to the peer device. In this case, priorities (forwarding classes) that are not part of a priority group (forwarding class set) receive no bandwidth and are advertised in an automatically generated default forwarding class. If ETS is not enabled on an interface (no priority groups are configured), all of the priorities are advertised in one automatically generated default priority group that receives 100 percent of the port bandwidth.

Disabling ETS autonegotiation prevents the interface from sending the Recommendation TLV or the Configuration TLV to the connected peer.

On interfaces that use IEEE DCBX mode to exchange DCBX parameters, you can disable autonegotiation of the ETS Recommendation TLV to the peer if you want an asymmetric ETS configuration between the peers. DCBX still exchanges the ETS Configuration TLV if you disable the ETS Recommendation TLV.

Autonegotiation of PFC means that when PFC is enabled on an interface, if the peer device connected to the interface supports PFC and is provisioned compatibly with the

switch, DCBX sets the PFC operational state to enabled. If the peer device connected to the interface does not support PFC or is not provisioned compatibly with the switch, DCBX sets the operational state to disabled.

In addition, if the peer advertises that it is “willing” to learn its PFC configuration from the switch, DCBX pushes the switch’s PFC configuration to the peer and does not check the peer’s administrative state. The switch does not learn PFC configuration from peers (the switch does not advertise its state as “willing”).

Disabling PFC autonegotiation prevents the interface from exchanging PFC configuration information with the peer. It forces the interface to enable PFC if PFC is configured on the interface or to disable PFC if PFC is not configured on the interface. If you disable PFC autonegotiation, the assumption is that the peer is also configured manually.

Autonegotiation of applications depends on whether or not you apply an application map to an interface. If you apply an application map to an interface, the interface autonegotiates DCBX for each application in the application map. PFC must be enabled on the FCoE priority (the FCoE IEEE 802.1p code point) for the interface to advertise the FCoE application. The interface only advertises applications that are included in the application map.

For example, if you apply an application map to an interface and the application map does not include the FCoE application, then that interface does not perform DCBX advertisement of FCoE.

If you do not apply an application map to an interface, DCBX does not advertise applications on that interface, with the exception of FCoE, which is handled differently than other applications.

NOTE: **If you do not apply an application map to an interface, the interface performs autonegotiation of FCoE if the interface carries traffic in the FCoE forwarding class and also has PFC enabled on the FCoE priority. On such interfaces, if DCBX detects that the peer device connected to the interface supports FCoE, the switch advertises its FCoE capability and IEEE 802.1p code point on that interface. If DCBX detects that the peer device connected to the interface does not support FCoE, DCBX marks that interface as “FCoE down” and disables FCoE on the interface.**

When DCBX marks an interface as “FCoE down,” the behavior of the switch depends on how you use it in the network:

- When the switch acts as an FCoE transit switch, the interface drops all of the FIP packets it receives. In addition, FIP packets received from an FCoE forwarder (FCF) are not forwarded to interfaces marked as “FCoE down.”
- When the switch acts as an FCoE-FC gateway (only switches that support native Fibre Channel interfaces), it does not send or receive FCoE Initialization Protocol (FIP) packets.

 Copyright © 2018, Juniper Networks, Inc.

Disabling autonegotiation prevents the interface from exchanging application information with the peer. In this case, the assumption is that the peer is also configured manually.

To disable DCBX autonegotiation of PFC, applications (including FCoE), and ETS using the CLI:

1. Turn off autonegotiation for PFC.

   ```
   [edit]
   user@switch# set protocols dcbx interface interface-name priority-flow-control
   no-auto-negotiation
   ```

2. Turn off autonegotiation for applications.

   ```
   [edit]
   user@switch# set protocols dcbx interface interface-name applications no-auto-negotiation
   ```

3. Turn off autonegotiation for ETS.

   ```
   [edit]
   user@switch# set protocols dcbx interface interface-name enhanced-transmission-selection
   no-auto-negotiation
   ```

To disable autonegotiation of the ETS Recommendation TLV so that DCBX exchanges only the ETS Configuration TLV:

- `[edit protocols dcbx interface interface-name]`
  `user@switch# set enhanced-transmission-selection no-recommendation-tlv`

Related Documentation

- Example: Configuring DCBX Application Protocol TLV Exchange on page 553
- Example: Configuring CoS PFC for FCoE Traffic on page 432
- Disabling the ETS Recommendation TLV on page 413
- Understanding DCBX Application Protocol TLV Exchange on page 546

Understanding DCBX Application Protocol TLV Exchange

Data Center Bridging Capability Exchange protocol (DCBX) discovers the data center bridging (DCB) capabilities of connected peers. DCBX also advertises the capabilities of applications on interfaces by exchanging application protocol information through application type, length, and value (TLV) elements. DCBX is an extension of Link Layer Discovery Protocol (LLDP). LLDP must remain enabled on every interface on which you want to use DCBX.

NOTE: **LLDP and DCBX are enabled by default on all interfaces.**

Setting up application protocol exchange consists of:

- Defining applications
- Mapping the applications to IEEE 802.1p code points in an *application map*
- Configuring classifiers to prioritize incoming traffic and map the incoming traffic to the application by the traffic code points
- Applying the application maps and classifiers to interfaces

You need to explicitly define the applications that you want an interface to advertise. The FCoE application is a special case (see "Applications" on page 546) and only needs to be defined on an interface if you want DCBX to exchange application protocol TLVs for other applications in addition to FCoE on that interface.

You also need to explicitly map all of the defined applications that you want an interface to advertise to IEEE 802.1p code points in an application map. The FCoE application is a special case that only requires inclusion in an application map when you want an interface to use DCBX for other applications in addition to FCoE, as described later in this topic (see "Application Maps" on page 547).

This topic describes:

- Applications on page 546
- Application Maps on page 547
- Classifying and Prioritizing Application Traffic on page 548
- Enabling Interfaces to Exchange Application Protocol Information on page 549
- Disabling DCBX Application Protocol Exchange on page 549

Applications

Before an interface can exchange application protocol information, you need to define the applications that you want to advertise. The exception is the FCoE application. If FCoE is the only application that you want the interface to advertise, then you do not need to define the FCoE application. You need to define the FCoE application only if you want interfaces to advertise other applications in addition to FCoE.

Copyright © 2018, Juniper Networks, Inc.

NOTE: If FCoE is the only application that you want DCBX to advertise on an interface, DCBX exchanges FCoE application protocol TLVs by default if the interface:

- Carries FCoE traffic (traffic mapped by CoS configuration to the FCoE forwarding class and applied to the interface)
- Has a congestion notification profile with PFC enabled on the FCoE priority (IEEE 802.1p code point)
- Does *not* have an application map

If you apply an application map to an interface, then all applications that you want DCBX to advertise must be defined and configured in the application map, including the FCoE application.

If no CoS configuration for FCoE is mapped to an interface, that interface does not exchange FCoE application protocol TLVs.

You can define:

- Layer 2 applications by EtherType
- Layer 4 applications by a combination of protocol (TCP or UDP) and destination port number

The EtherType is a two-octet field in the Ethernet frame that denotes the protocol encapsulated in the frame. For a list of common EtherTypes, see http://standards.ieee.org/develop/regauth/ethertype/eth.txt on the IEEE standards organization website. For a list of port numbers and protocols, see the *Service Name and Transport Protocol Port Number Registry* at http://www.iana.org/assignments/service-names-port-numbers/service-names-port-numbers.xml on the Internet Assigned Numbers Authority (IANA) website.

You must explicitly define each application that you want to advertise, except FCoE. The FCoE application is defined by default (EtherType 0x8906).

Application Maps

An application map maps defined applications to one or more IEEE 802.1p code points. Each application map contains one or more applications. DCBX includes the configured application code points in the protocol TLVs exchanged with the connected peer.

To exchange protocol TLVs for an application, you must include the application in an application map. The FCoE application is a special case:

- If you want DCBX to exchange application protocol TLVs for more than one application on a particular interface, you must configure the applications, define an application map to map the applications to code points, and apply the application map to the interface. In this case, you must also define the FCoE application and add it to the application map.

This is the same process and treatment required for all other applications. In addition, for DCBX to exchange FCoE application TLVs, you must enable priority-based flow control (PFC) on the FCoE priority (the FCoE IEEE 802.1p code point) on the interface.

- If FCoE is the only application that you want DCBX to advertise on an interface, then you do not need to configure an application map and apply it to the interface. By default, when an interface has no application map, and the interface carries traffic mapped to the FCoE forwarding class, and PFC is enabled on the FCoE priority, the interface advertises FCoE TLVs (autonegotiation mode). DCBX exchanges FCoE application protocol TLVs by default until you apply an application map to the interface, remove the FCoE traffic from the interface (you can do this by removing the or editing the classifier for FCoE traffic), or disable PFC on the FCoE priority.

  If you apply an application map to an interface that did not have an application map and was exchanging FCoE application TLVs, and you do not include the FCoE application in the application map, the interface stops exchanging FCoE TLVs. Every interface that has an application map must have FCoE included in the application map (and PFC enabled on the FCoE priority) in order for DCBX to exchange FCoE TLVs.

Mapping an application to code points does two things:

- Maps incoming traffic with the same code points to that application
- Allows you to configure classifiers that map incoming application traffic, by code point, to a forwarding class and a loss priority, in order to apply class of service (CoS) to application traffic and prioritize application traffic

You apply an application map to an interface to enable DCBX application protocol exchange on that interface for each application specified in the application map. All of the applications that you want an interface to advertise must be configured in the application map that you apply to the interface, with the previously noted exception for the FCoE application when FCoE is the only application for which you want DCBX to exchange protocol TLVs on an interface.

Classifying and Prioritizing Application Traffic

When traffic arrives at an interface, the interface classifies the incoming traffic based on its code points. Classifiers map code points to loss priorities and forwarding classes. The loss priority prioritizes the traffic. The forwarding class determines the traffic output queue and CoS service level.

When you map an application to an IEEE 802.1p code point in an application map and apply the application map to an interface, incoming traffic on the interface that matches the application code points is mapped to the appropriate application. The application receives the loss priority and the CoS associated with the forwarding class for those code points, and is placed in the output queue associated with the forwarding class.

You can use the default classifier or you can configure a classifier to map the application code points defined in the application map to forwarding classes and loss priorities.

 Copyright © 2018, Juniper Networks, Inc.

Enabling Interfaces to Exchange Application Protocol Information

Each interface with the **fcoe** forwarding class and PFC enabled on the FCoE code point is enabled for FCoE application protocol exchange by default until you apply an application map to the interface. If you apply an application map to an interface and you want that interface to exchange FCoE application protocol TLVs, you must include the FCoE application in the application map. (In all cases, to achieve lossless transport, you must also enable PFC on the FCoE code point or code points.)

Except when FCoE is the only protocol you want DCBX to advertise on an interface, interfaces on which you want to exchange application protocol TLVs must include the following two items:

- The application map that contains the application(s)
- A classifier

NOTE: **You must also enable PFC on the code point of any traffic for which you want to achieve lossless transport.**

Disabling DCBX Application Protocol Exchange

To disable DCBX application protocol exchange for all applications on an interface, issue the **set protocols dcbx interface *interface-name* applications no-auto-negotiation** command.

You can also disable DCBX application protocol exchange for applications on an interface by deleting the application map from the interface, or by deleting a particular application from the application map. However, when you delete an application from an application map, the application protocol is no longer exchanged on any interface which uses that application map.

On interfaces that use IEEE DCBX mode to exchange DCBX parameters, you can disable sending the enhanced transmission selection (ETS) Recommendation TLV to the peer if you want an asymmetric ETS configuration between the peers.

Related Documentation

- Understanding DCBX on page 533
- Configuring DCBX Autonegotiation on page 543
- Disabling the ETS Recommendation TLV on page 413
- Defining an Application for DCBX Application Protocol TLV Exchange on page 550
- Configuring an Application Map for DCBX Application Protocol TLV Exchange on page 551
- Applying an Application Map to an Interface for DCBX Application Protocol TLV Exchange on page 552
- Example: Configuring DCBX Application Protocol TLV Exchange on page 553

Defining an Application for DCBX Application Protocol TLV Exchange

Define each application for which you want DCBX to exchange application protocol information. You can define Layer 2 and Layer 4 applications. After you define applications, you map them to IEEE 802.1p code points, and then apply the application map to the interfaces on which you want DCBX to exchange application protocol information with connected peers. (See *Related Documentation* for how to configure application maps and apply them to interfaces, and for an example of the entire procedure that also includes classifier configuration.)

NOTE: In Junos OS Release 12.1, the FCoE application was configured by default, so you did not need to configure it in an application map. In Junos OS Release 12.2, if you want DCBX to advertise the FCoE application on an interface and you apply an application map to that interface, you must explicitly configure FCoE in the application map. You also must enable priority-based flow control (PFC) on the FCoE code point on all interfaces that you want to advertise FCoE. If you apply an application map to an interface, the interface sends DCBX TLVs only for the applications configured in the application map.

Define Layer 2 applications by mapping an application name to an EtherType. Define Layer 4 applications by mapping an application name to a protocol (TCP or UDP) and a destination port.

- To define a Layer 2 application, specify the name of the application and its EtherType:

  ```
  [edit applications]
  user@switch# set application application-name ether-type ether-type
  ```

  For example, to configure an application named **PTP** (for Precision Time Protocol) that uses the EtherType **0x88F7**:

  ```
  user@switch# set applications application ptp ether-type 0x88F7
  ```

- To define a Layer 4 application, specify the name of the application, its protocol (TCP or UDP), and its destination port:

  ```
  [edit]
  user@switch# set applications application application-name protocol (tcp | udp)
  destination-port port-value
  ```

  For example, to configure an application named **iscsi** (for Internet Small Computer System Interface) that uses the protocol **TCP** and the destination port **3260**:

  ```
  user@switch# set applications application iscsi protocol tcp destination-port 3260
  ```

Related Documentation

- Configuring an Application Map for DCBX Application Protocol TLV Exchange on page 551

Copyright © 2018, Juniper Networks, Inc.

- Applying an Application Map to an Interface for DCBX Application Protocol TLV Exchange on page 552
- Configuring DCBX Autonegotiation on page 543
- Example: Configuring DCBX Application Protocol TLV Exchange on page 553
- *Example: Configuring DCBX to Support an iSCSI Application*
- Understanding DCBX Application Protocol TLV Exchange on page 546
- **show dcbx neighbors on page 991**

Configuring an Application Map for DCBX Application Protocol TLV Exchange

After you define applications for which you want to exchange DCBX application protocol information, map the applications to IEEE 802.1p code points. The IEEE 802.1p code points identify incoming traffic and allow you to map that traffic to the desired application. You then apply the application map to the interfaces on which you want DCBX to exchange application protocol information with connected peers. (See *Related Documentation* for how to define applications and apply the application map to interfaces, and for an example of the entire procedure that also includes classifier configuration.)

NOTE: In Junos OS Release 12.1, the FCoE application was configured by default, so you did not need to configure it in an application map. In Junos OS Release 12.2, if you want DCBX to advertise the FCoE application on an interface and you apply an application map to that interface, you must explicitly configure FCoE in the application map. You also must enable priority-based flow control (PFC) on the FCoE code point on all interfaces that you want to advertise FCoE. If you apply an application map to an interface, the interface sends DCBX TLVs only for the applications configured in the application map.

Configure an application map by creating an application map name and mapping an application to one or more IEEE 802.1p code points.

- To define an application map, specify the name of the application map, the name of the application, and the IEEE 802.1p code points of the incoming traffic that you want to associate with the application in the application map:

  ```
  [edit policy-options]
  user@switch# set application-maps application-map-name application application-name
  code-points [ aliases ] [ bit-patterns ]
  ```

  For example, to configure an application map named **ptp-app-map** that includes an application named **PTP** (for Precision Time Protocol) and map the application to IEEE 802.1p code points **001** and **101**:

  ```
  user@switch# set policy-options application-maps ptp-app-map application ptp code points
  [ 001 101 ]
  ```

Related Documentation

- Defining an Application for DCBX Application Protocol TLV Exchange on page 550
- Applying an Application Map to an Interface for DCBX Application Protocol TLV Exchange on page 552
- Configuring DCBX Autonegotiation on page 543
- Example: Configuring DCBX Application Protocol TLV Exchange on page 553
- *Example: Configuring DCBX to Support an iSCSI Application*
- **show dcbx neighbors on page 991**

Applying an Application Map to an Interface for DCBX Application Protocol TLV Exchange

After you define applications and map them to IEEE 802.1p code points in an application map, apply the application map to the interfaces on which you want DCBX to exchange the application protocol information with connected peers. (See *Related Documentation* for how to define applications and configure application maps to interfaces, and for an example of the entire procedure that also includes classifier configuration.)

NOTE: In Junos OS Release 12.1, the FCoE application was configured by default, so you did not need to configure it in an application map. In Junos OS Release 12.2, if you want DCBX to advertise the FCoE application on an interface and you apply an application map to that interface, you must explicitly configure FCoE in the application map. You also must enable priority-based flow control (PFC) on the FCoE code point on all interfaces that you want to advertise FCoE. If you apply an application map to an interface, the interface sends DCBX TLVs only for the applications configured in the application map.

- To apply an application map to a DCBX interface, specify the DCBX interface and the application map name:

  ```
  [edit protocols]
  user@switch# set dcbx interface interface-name application-map application-map-name
  ```

  For example, to apply an application map named **ptp-app-map** on interface **xe-0/0/11**:

  ```
  user@switch# set protocols dcbx interface xe-0/0/11 application-map ptp-app-map
  ```

Related Documentation

- Defining an Application for DCBX Application Protocol TLV Exchange on page 550
- Configuring an Application Map for DCBX Application Protocol TLV Exchange on page 551
- Configuring DCBX Autonegotiation on page 543
- Example: Configuring DCBX Application Protocol TLV Exchange on page 553

Copyright © 2018, Juniper Networks, Inc.

- *Example: Configuring DCBX to Support an iSCSI Application*
- show dcbx neighbors on page 991

Example: Configuring DCBX Application Protocol TLV Exchange

Data Center Bridging Capability Exchange protocol (DCBX) discovers the data center bridging (DCB) capabilities of connected peers by exchanging application configuration information. DCBX detects feature misconfiguration and mismatches and can configure DCB on peers. DCBX is an extension of the Link Layer Discovery Protocol (LLDP). LLDP must remain enabled on every interface on which you want to use DCBX.

NOTE: **LLDP and DCBX are enabled by default on all interfaces.**

The switch supports DCBX application protocol exchange for Layer 2 and Layer 4 applications such as the Internet Small Computer System Interface (iSCSI). You specify applications by EtherType (for Layer 2 applications) or by the destination port and protocol (for Layer 4 applications; the protocol can be either TCP or UDP).

The switch handles Fibre Channel over Ethernet (FCoE) application protocol exchange differently than other protocols in some cases:

- If FCoE is the only application for which you want to enable DCBX application protocol TLV exchange on an interface, you do not have to explicitly configure the FCoE application or an application map. By default, the switch exchanges FCoE application protocol TLVs on all interfaces that carry FCoE traffic (traffic mapped to the **fcoe** forwarding class) and have priority-based flow control (PFC) enabled on the FCoE priority (the FCoE IEEE 802.1p code point). The default priority mapping for the FCoE application is IEEE 802.1p code point 011 (the default **fcoe** forwarding class code point).
- If you want an interface to use DCBX to exchange application protocol TLVs for any other applications in addition to FCoE, you must configure the applications (including FCoE), define an application map (including FCoE), and apply the application map to the interface. If you apply an application map to an interface, you must explicitly configure the FCoE application, or the interface does not exchange FCoE application protocol TLVs.

This example shows how to configure interfaces to exchange both Layer 2 and Layer 4 applications by configuring one interface to exchange iSCSI and FCoE application protocol information and configuring another interface to exchange iSCSI and Precision Time Protocol (PTP) application protocol information.

- Requirements on page 554
- Overview on page 554
- Configuration on page 557
- Verification on page 559

Requirements

This example uses the following hardware and software components:

- Juniper Networks QFX Series device
- Junos OS Release 12.1 or later for the QFX Series

Overview

The switch supports DCBX application protocol exchange for:

- Layer 2 applications, defined by EtherType
- Layer 4 applications, defined by destination port and protocol

NOTE: DCBX also advertises PFC and enhanced transmission selection (ETS) information. See "Configuring DCBX Autonegotiation" on page 543 for how DCBX negotiates and advertises configuration information for these features and for the applications.

DCBX is configured on a per-interface basis for each supported feature or application. For applications that you want to enable for DCBX application protocol exchange, you must:

- Define the application name and configure the EtherType or the destination port and protocol (TCP or UDP) of the application. Use the EtherType for Layer 2 applications, and use the destination port and protocol for Layer 4 protocols.
- Map the application to an IEEE 802.1p code point in an application map.
- Add the application map to DCBX interface.

In addition, for all applications (including FCoE, even when you do not use an application map), you either must create an IEEE 802.1p classifier and apply it to the appropriate ingress interfaces or use the default classifier. A classifier maps the code points of incoming traffic to a forwarding class and a loss priority so that ingress traffic is assigned to the correct class of service (CoS). The forwarding class determines the output queue on the egress interface.

If you do not create classifiers, trunk and tagged-access ports use the unicast IEEE 802.1 default trusted classifier. Table 104 on page 555 shows the default mapping of IEEE 802.1 code-point values to unicast forwarding classes and loss priorities for ports in trunk mode or tagged-access mode. Table 105 on page 555 shows the default untrusted classifier IEEE 802.1 code-point values to unicast forwarding class mapping for ports in access mode.

Copyright © 2018, Juniper Networks, Inc.

Table 104: Default IEEE 802.1 Classifiers for Trunk Ports and Tagged-Access Ports (Default Trusted Classifier)

Code Point	Forwarding Class	Loss Priority
be (000)	best-effort	low
be1 (001)	best-effort	low
ef (010)	best-effort	low
ef1 (011)	fcoe	low
af11 (100)	no-loss	low
af12 (101)	best-effort	low
nc1 (110)	network-control	low
nc2 (111)	network-control	low

Table 105: Default IEEE 802.1 Unicast Classifiers for Access Ports (Default Untrusted Classifier)

Code Point	Forwarding Class	Loss Priority
000	best-effort	low
001	best-effort	low
010	best-effort	low
011	best-effort	low
100	best-effort	low
101	best-effort	low
110	best-effort	low
111	best-effort	low

Topology

This example shows how to configure DCBX application protocol exchange for three protocols (iSCSI, PTP, and FCoE) on two interfaces. One interface exchanges iSCSI and FCoE application protocol information, and the other interface exchanges iSCSI and PTP application protocol information.

NOTE: You must map FCoE traffic to the interfaces on which you want to forward FCoE traffic. You must also enable PFC on the FCoE interfaces and create an ingress classifier for FCoE traffic, or else use the default classifier.

Table 106 on page 556 shows the configuration components for this example.

Table 106: Components of DCBX Application Protocol Exchange Configuration Topology

Component	Settings
Hardware	QFX Series device
LLDP	Enabled by default on Ethernet interfaces
DCBX	Enabled by default on Ethernet interfaces
iSCSI application (Layer 4)	Application name—**iscsi** protocol—**TCP** destination-port—**3260** code-points—**111**
PTP application (Layer 2)	Application name—**ptp** ether-type—**0x88F7** code-points—**001**, **101**
FCoE application (Layer 2)	Application name—**fcoe** ether-type—**0x8906** code-points—**011** NOTE: You explicitly configure the FCoE application because you are applying an application map to the interface. When you apply an application map to an interface, all applications must be explicitly configured and included in the application map.
Application maps	**dcbx-iscsi-fcoe-app-map**—Maps the iSCSI and FCoE applications to IEEE 802.1p code points **dcbx-iscsi-ptp-app-map**—Maps iSCSI and PTP applications to IEEE 802.1p code points
Interfaces	**xe-0/0/10**—Configured to exchange FCoE and iSCSI application TLVs (uses application map **dcbx-iscsi-fcoe-app-map**, carries FCoE traffic, and has PFC enabled on the FCoE priority) **xe-0/0/11**—Configured to exchange iSCSI and PTP application TLVs (uses application map **dcbx-iscsi-ptp-app-map**)

Copyright © 2018, Juniper Networks, Inc.

Table 106: Components of DCBX Application Protocol Exchange Configuration Topology (continued)

Component	Settings
PFC congestion notification profile for FCoE application exchange	**fcoe-cnp**: • Code point—**011** • Interface—**xe-0/0/10**
Behavior aggregate classifiers (map forwarding classes to incoming packets by the packet's IEEE 802.1 code point)	**fcoe-iscsi-cl1**: • Maps the **fcoe** forwarding class to the IEEE 802.1p code point used for the FCoE application (**011**) and a loss priority of **high** • Maps the **network-control** forwarding class to the IEEE 802.1p code point used for the iSCSI application (**111**) and a loss priority of **high** • Applied to interface **xe-0/0/10** **iscsi-ptp-cl2**: • Maps the **network-control** forwarding class to the IEEE 802.1p code point used for the iSCSI application (**111**) and a loss priority of **low** • Maps the **best-effort** forwarding class to the IEEE 802.1p code points used for the PTP application (**001** and **101**) and a loss priority of **low** • Applied to interface **xe-0/0/11**

NOTE: This example does not include scheduling (bandwidth allocation) configuration or lossless configuration for the iSCSI forwarding class.

Configuration

CLI Quick Configuration

To quickly configure DCBX application protocol exchange, copy the following commands, paste them in a text file, remove line breaks, change variables and details to match your network configuration, and then copy and paste the commands into the CLI at the **[edit]** hierarchy level.

```
set applications application iSCSI protocol tcp destination-port 3260
set applications application FCoE ether-type 0x8906
set applications application PTP ether-type 0x88F7
set policy-options application-maps dcbx-iscsi-fcoe-app-map application iSCSI code-points 111
set policy-options application-maps dcbx-iscsi-fcoe-app-map application FCoE code-points 011
set policy-options application-maps dcbx-iscsi-ptp-app-map application iSCSI code-points 111
set policy-options application-maps dcbx-iscsi-ptp-app-map application PTP code-points [001
101]
set protocols dcbx interface xe-0/0/10 application-map dcbx-iscsi-fcoe-app-map
set protocols dcbx interface xe-0/0/11 application-map dcbx-iscsi-ptp-app-map
set class-of-service congestion-notification-profile fcoe-cnp input ieee-802.1 code-point 011 pfc
set class-of-service interfaces xe-0/0/10 congestion-notification-profile fcoe-cnp
set class-of-service classifiers ieee-802.1 fcoe-iscsi-cl1 import default forwarding-class fcoe
loss-priority high code-points 011
```

```
set class-of-service classifiers ieee-802.1 fcoe-iscsi-cl1 import default forwarding-class
network-control loss-priority high code-points 111
set class-of-service classifiers ieee-802.1 iscsi-ptp-cl2 import default forwarding-class
network-control loss-priority low code-points 111
set class-of-service classifiers ieee-802.1 iscsi-ptp-cl2 import default forwarding-class best-effort
loss-priority low code-points [001 101]
set class-of-service interfaces xe-0/0/10 unit 0 classifiers ieee-802.1 fcoe-iscsi-cl1
set class-of-service interfaces xe-0/0/11 unit 0 classifiers ieee-802.1 iscsi-ptp-cl2
```

Configuring DCBX Application Protocol TLV Exchange

Step-by-Step Procedure

To define the applications, map the applications to IEEE 802.1p code points, apply the applications to interfaces, and create classifiers for DCBX application protocol exchange:

1. Define the iSCSI application by specifying its protocol and destination port, and define the FCoE and PTP applications by specifying their EtherTypes.

   ```
   [edit applications]
   user@switch# set application iSCSI protocol tcp destination-port 3260
   user@switch# set application FCoE ether-type 0x8906
   user@switch# set application PTP ether-type 0x88F7
   ```

2. Define an application map that maps the iSCSI and FCoE applications to IEEE 802.1p code points.

   ```
   [edit policy-options]
   user@switch# set application-maps dcbx-iscsi-fcoe-app-map application iSCSI code-points
   111
   user@switch# set application-maps dcbx-iscsi-fcoe-app-map application FCoE code-points
   011
   ```

3. Define the application map that maps the iSCSI and PTP applications to IEEE 802.1p code points.

   ```
   [edit policy-options]
   user@switch# set application-maps dcbx-iscsi-ptp-app-map application iSCSI code-points
   111
   user@switch# set application-maps dcbx-iscsi-ptp-app-map application PTP code-points
   [001 101]
   ```

4. Apply the iSCSI and FCoE application map to interface **xe-0/0/10**, and apply the iSCSI and PTP application map to interface **xe-0/0/11**.

   ```
   [edit protocols dcbx]
   user@switch# set interface xe-0/0/10 application-map dcbx-iscsi-fcoe-app-map
   user@switch# set interface xe-0/0/11 application-map dcbx-iscsi-ptp-app-map
   ```

5. Create the congestion notification profile to enable PFC on the FCoE code point (**011**), and apply the congestion notification profile to interface **xe-0/0/10**.

   ```
   [edit class-of-service]
   ```


Copyright © 2018, Juniper Networks, Inc.

```
user@switch# set congestion-notification-profile fcoe-cnp input ieee-802.1 code-point
011 pfc
user@switch# set interfaces xe-0/0/10 congestion-notification-profile fcoe-cnp
```

6. Configure the classifier to apply to the interface that exchanges iSCSI and FCoE application information.

```
[edit class-of-service classifiers]
user@switch# set ieee-802.1 fcoe-iscsi-cl1 import default forwarding-class fcoe loss-priority
high code-points 011
user@switch# set ieee-802.1 fcoe-iscsi-cl1 import default forwarding-class network-control
loss-priority high code-points 111
```

7. Configure the classifier to apply to the interface that exchanges iSCSI and PTP application information.

```
[edit class-of-service classifiers]
user@switch# set ieee-802.1 iscsi-ptp-cl2 import default forwarding-class network-control
loss-priority low code-points 111
user@switch# set ieee-802.1 iscsi-ptp-cl2 import default forwarding-class best-effort
loss-priority low code-points [001 101]
```

8. Apply the classifiers to the appropriate interfaces.

```
[edit class-of-service]
user@switch# set interfaces xe-0/0/10 unit 0 classifiers ieee-802.1 fcoe-iscsi-cl1
user@switch# set interfaces xe-0/0/11 unit 0 classifiers ieee-802.1 iscsi-ptp-cl2
```

Verification

To verify that DCBX application protocol exchange configuration has been created and is operating properly, perform these tasks:

- Verifying the Application Configuration on page 559
- Verifying the Application Map Configuration on page 560
- Verifying DCBX Application Protocol Exchange Interface Configuration on page 561
- Verifying the PFC Configuration on page 561
- Verifying the Classifier Configuration on page 562

Verifying the Application Configuration

Purpose Verify that DCBX applications have been configured.

Action List the applications by using the configuration mode command **show applications**:

```
user@switch# show applications
```

```
application iSCSI {
   protocol tcp;
   destination-port 3260;
}

application fcoe {
   ether-type 0x8906;
}

application ptp {
   ether-type 0x88F7;
}
```

Meaning The **show applications** configuration mode command lists all of the configured applications and either their protocol and destination port (Layer 4 applications) or their EtherType (Layer 2 applications). The command output shows that the iSCSI application is configured with the **tcp** protocol and destination port **3260**, the FCoE application is configured with the EtherType **0x8906**, and that the PTP application is configured with the EtherType **0x88F7**.

Verifying the Application Map Configuration

Purpose Verify that the application maps have been configured.

Action List the application maps by using the configuration mode command **show policy-options application-maps**:

```
user@switch# show policy-options application-maps
```

```
dcbx-iscsi-fcoe-app-map {
   application iSCSI code-points 111;
   application FCoE code-points 011;
}

dcbx-iscsi-ptp-app-map {
   application iSCSI code-points 111;
   application PTP code-points [001 101];
}
```

Meaning The **show policy-options application-maps** configuration mode command lists all of the configured application maps and the applications that belong to each application map. The command output shows that there are two application maps, **dcbx-iscsi-fcoe-app-map** and **dcbx-iscsi-ptp-app-map**.

The application map **dcbx-iscsi-fcoe-app-map** consists of the iSCSI application, which is mapped to IEEE 802.1p code point **111**, and the FCoE application, which is mapped to IEEE 802.1p code point **011**.

 Copyright © 2018, Juniper Networks, Inc.

The application map **dcbx-iscsi-ptp-app-map** consists of the iSCSI application, which is mapped to IEEE 802.1p code point **111**, and the PTP application, which is mapped to IEEE 802.1p code points **001** and **101**.

Verifying DCBX Application Protocol Exchange Interface Configuration

Purpose Verify that the application maps have been applied to the correct interfaces.

Action List the application maps by using the configuration mode command **show protocols dcbx**:

```
user@switch# show protocols dcbx
```

```
interface xe-0/0/10.0 {
   application-map dcbx-iscsi-fcoe-app-map;
}

interface xe-0/0/11.0 {
   application-map dcbx-iscsi-ptp-app-map;
}
```

Meaning The **show protocols dcbx** configuration mode command lists whether the interfaces are enabled for DCBX and lists the application map applied to each interface. The command output shows that interfaces **xe-0/0/10.0** and **xe-0/0/11.0** are enabled for DCBX, and that interface **xe-0/0/10.0** uses application map **dcbx-iscsi-fcoe-app-map**, and interface **xe-0/0/11.0** uses application map **dcbx-iscsi-ptp-app-map**.

Verifying the PFC Configuration

Purpose Verify that PFC has been enabled on the FCoE code point and applied to the correct interface.

Action Display the PFC configuration to verify that PFC is enabled on the FCoE code point (**011**) in the congestion notification profile **fcoe-cnp** by using the configuration mode command **show class-of-service congestion-notification-profile**:

```
user@switch# show class-of-service congestion-notification-profile
```

```
fcoe-cnp {
    input {
        ieee-802.1 {
            code-point 011 {
                pfc;
            }
        }
    }
}
```

Display the class-of-service (CoS) interface information to verify that the correct interface has PFC enabled for the FCoE application by using the configuration mode command **show class-of-service interfaces**:

```
user@switch# show class-of-service interfaces
xe-0/0/10 {
    congestion-notification-profile fcoe-cnp;
}
```

NOTE: The sample output does not include all of the information this command can show. The output is abbreviated to focus on verifying the PFC configuration.

Meaning The **show class-of-service congestion-notification-profile** configuration mode command lists the configured congestion notification profiles. The command output shows that the congestion notification profile **fcoe-cnp** has been configured and has enabled PFC on the IEEE 802.1p code point **011** (the default FCoE code point).

The **show class-of-service interfaces** configuration mode command shows the interface CoS configuration. The command output shows that the congestion notification profile **fcoe-cnp**, which enables PFC on the FCoE code point, is applied to interface **xe-0/0/10**.

Verifying the Classifier Configuration

Purpose Verify that the classifiers have been configured and applied to the correct interfaces.

Action Display the classifier configuration by using the configuration mode command **show class-of-service**:

```
user@switch# show class-of-service
classifiers {
    ieee-802.1 fcoe-iscsi-cl1 {
        import default;
        forwarding-class network-control {
            loss-priority high code-points 111;
        }
        forwarding-class fcoe {
            loss-priority high code-points 011;
        }
    }
    ieee-802.1 iscsi-ptp-cl2 {
        import default;
        forwarding-class network-control {
            loss-priority low code-points 111;
        }
        forwarding-class best-effort {
            loss-priority low code-points [ 001 101 ];
        }
```

 Copyright © 2018, Juniper Networks, Inc.

```
    }
}
interfaces {
    xe-0/0/10 {
        congestion-notification-profile fcoe-cnp;
        unit 0 {
            classifiers {
                ieee-802.1 fcoe-iscsi-cl1;
            }
        }
    }
    xe-0/0/11 {
        unit 0 {
            classifiers {
                ieee-802.1 iscsi-ptp-cl2;
            }
        }
    }
}
```

NOTE: The sample output does not include all of the information this command can show. The output is abbreviated to focus on verifying the classifier configuration.

Meaning The **show class-of-service** configuration mode command lists the classifier and CoS interface configuration, as well as other information not shown in this example. The command output shows that there are two classifiers configured, **fcoe-iscsi-cl1** and **iscsi-ptp-cl2**.

Classifier **fcoe-iscsi-cl1** uses the **default** classifier as a template and edits the template as follows:

- The forwarding class **network-control** is set to a loss priority of **high** and is mapped to code point **111** (the code point mapped to the iSCSI application).
- The forwarding class **fcoe** is set to a loss priority of **high** and is mapped to code point **011** (the code point mapped by default to the FCoE application).

Classifier **iscsi-ptp-cl2** uses the **default** classifier as a template and edits the template as follows:

- The forwarding class **network-control** is set to a loss priority of **low** and is mapped to IEEE 802.1p code point **111** (the code point mapped to the iSCSI application).
- The forwarding class **best-effort** is set to a loss priority of **low** and is mapped to IEEE 802.1p code points **001** and **101** (the code points mapped by default to the PTP application).

The command output also shows that classifier **fcoe-iscsi-cl1** is mapped to interface **xe-0/0/10.0** and that classifier **iscsi-ptp-cl2** is mapped to interface **xe-0/0/11.0**.

Related Documentation

- Defining an Application for DCBX Application Protocol TLV Exchange on page 550
- Configuring an Application Map for DCBX Application Protocol TLV Exchange on page 551
- Applying an Application Map to an Interface for DCBX Application Protocol TLV Exchange on page 552
- Configuring DCBX Autonegotiation on page 543
- **show dcbx on page 990**
- **show dcbx neighbors on page 991**
- Understanding DCBX Application Protocol TLV Exchange on page 546

Copyright © 2018, Juniper Networks, Inc.

PART 5

Configuring Buffers

- Using Buffers on page 567

Copyright © 2018, Juniper Networks, Inc.

CHAPTER 8

Using Buffers

- Understanding CoS Buffer Configuration on page 568
- Configuring Global Ingress and Egress Shared Buffers on page 590
- Example: Recommended Configuration of the Shared Buffer Pool for Networks with Mostly Best-Effort Unicast Traffic on page 592
- Example: Recommended Configuration of the Shared Buffer Pool for Networks with Mostly Best-Effort Traffic on Links with Ethernet PAUSE Enabled on page 598
- Example: Recommended Configuration of the Shared Buffer Pool for Networks with Mostly Multicast Traffic on page 605
- Example: Recommended Configuration of the Shared Buffer Pool for Networks with Mostly Lossless Traffic on page 611

Understanding CoS Buffer Configuration

Copyright © 2018, Juniper Networks, Inc.

Packet Forwarding Engine (PFE) wide common packet buffer memory is used to store packets on interface queues. The buffer memory has separate ingress and egress accounting to make accept, drop, or pause decisions. Because the switch has a single pool of memory with separate ingress and egress accounting, the full amount of buffer memory is available from both the ingress and the egress perspective. Packets are accounted for as they enter and leave the switch, but there is no concept of a packet arriving at an ingress buffer and then being moved to an egress buffer. Specific common buffer memory amounts for individual switches is listed in Table 107 on page 569.

Table 107: Common Packet Buffer Memory on Switches

Switch	Common Packet Buffer Memory
QFX3500, QFX3600	9 MB
QFX5100, EX4600, and OCX Series	12 MB
QFX5110, QFX5200-32C	16MB
QFX5200-48Y	22MB
QFX5210	42MB

NOTE: QFX10000 does not have a shared buffer.

The buffers are divided into two pools from both an ingress and an egress perspective:

1. *Shared buffers* are a global memory pool that the switch allocates dynamically to ports as needed, so the buffers are shared among the switch ports.
2. *Dedicated buffers* are a memory pool divided equally among the switch ports. Each port receives a minimum guaranteed amount of buffer space, dedicated to each port, not shared among ports.

NOTE: Lossless traffic is traffic on which you enable priority-based flow control (PFC) to ensure lossless transport. Lossless traffic does not refer to best-effort traffic on a link enabled for Ethernet PAUSE (IEEE 802.3x).

OCX Series switches do not support lossless transport or PFC. In this topic, references to lossless transport do not apply to OCX Series switches.

The switch reserves nonconfigurable buffer space to ensure that ports and queues receive a minimum memory allocation. You can configure how the system uses the rest of the buffer space to optimize the allocation for your mix of network traffic. You can configure the percentage of available buffer space used as shared buffer space versus dedicated buffer space. You can also configure how shared buffer space is allocated to different types of traffic. You can optimize the buffer settings for the traffic on your network.

Copyright © 2018, Juniper Networks, Inc.

The default buffer configuration is designed for networks that have a balance of best-effort and lossless traffic. Because OCX Series switches do not support lossless traffic, instead of using the default buffer configuration on OCX Series switches, consider configuring the buffers as recommended for networks with mostly best-effort traffic as shown in Table 126 on page 585 and Table 127 on page 585.

The default class-of-service configuration provides two lossless forwarding classes (**fcoe** and **no-loss)**, a best-effort unicast forwarding class, a network control traffic forwarding class, and one multidestination (multicast, broadcast, and destination lookup fail) forwarding class.

NOTE: **On OCX Series switches, do not map traffic to the default lossless forwarding classes.**

Each default forwarding class maps to a different default output queue. The default configuration allocates the buffers in a manner that supports a moderate amount of lossless traffic while still providing the ability to absorb bursts in best-effort traffic transmission.

Changing the buffer settings changes the abilities of the buffers to absorb traffic bursts and handle lossless traffic. For example, networks with mostly best-effort traffic require allocating most of the shared buffer space to best-effort buffers. This provides deep, flexible buffers that can absorb traffic bursts with minimal packet loss, at the expense of buffer availability for lossless traffic.

Conversely, networks with mostly lossless traffic require allocating most of the shared buffer space to lossless headroom buffers. This prevents packet loss on lossless flows at the expense of absorbing bursty best-effort traffic efficiently.

CAUTION: **Changing the buffer configuration is a disruptive event. Traffic stops on *all* ports until buffer reprogramming is complete.**

This topic describes the buffer architecture and settings:

- Buffer Pools on page 570
- Default Buffer Pool Values on page 579
- Shared Buffer Configuration Recommendations for Different Network Traffic Scenarios on page 583
- Optimizing Buffer Configuration on page 587
- General Buffer Configuration Rules and Considerations on page 588

Buffer Pools

From both an ingress and an egress perspective, the PFE buffer is split into two main pools, a shared buffer pool and a dedicated buffer pool that ensures a minimum allocation to each port. You can configure the amount of buffer space allocated to each of the two

 Copyright © 2018, Juniper Networks, Inc.

pools. A portion of the buffer space is reserved so that there is always a minimum amount of shared and dedicated buffer space available to each port.

- Shared buffer pool—A global memory space that all of the ports on the switch share dynamically as they need buffers. The shared buffer pool is further partitioned into buffers for best-effort unicast, best-effort multidestination (broadcast, multicast, and destination lookup fail), and PFC (lossless) traffic types. You can allocate global shared memory space to buffer partitions to better support different mixes of network traffic. The larger the shared buffer pool, the better the switch can absorb traffic bursts because more shared memory is available for the traffic.
- Dedicated buffer pool—A reserved global memory space allocated equally to each port. The switch reserves a minimum dedicated buffer pool that is not user-configurable. You can divide the dedicated buffer allocation for a port among the port queues on a per-port, per-queue basis. (For example, this enables you to dedicate more buffer space to queues that transport lossless traffic.)

  A larger dedicated buffer pool means a larger amount of dedicated buffer space for each port, so congestion on one port is less likely to affect traffic on another port because the traffic does not need to use as much shared buffer space. However, the larger the dedicated buffer pool, the less bursty traffic the switch can handle because there is less dynamic shared buffer memory.

You can configure the way the available unreserved portion of the buffer space is allocated to the global shared buffer pool and to the dedicated shared buffer pool by configuring the ingress and egress shared buffer percentages.

By default, 100 percent of the available unreserved buffer space is allocated to the shared buffer pool. If you change the percentage of space allocated to the shared buffer, the available buffer space that is not allocated to the shared buffer is allocated to the dedicated buffer. For example, if you configure the ingress shared buffer pool as 80 percent, the remaining 20 percent of the available buffer space is allocated to the dedicated buffer pool and divided equally across the ports.

NOTE: **When 100 percent of the available (user-configurable) buffers are allocated to the shared buffer pool, the switch still reserves a minimum dedicated buffer pool.**

You can separately configure ingress and egress shared buffer pool allocations. You can also partition the ingress and egress shared buffer pool to allocate percentages of the shared buffer pool to specific types of traffic. If you do not use the default configuration or one of the recommended configurations, pay particular attention to the ingress configuration of the lossless headroom buffers (these buffers handle PFC pause during periods of congestion) and to the egress configuration of the best-effort buffers to handle incast congestion (multiple synchronized sources sending data to the same receiver in parallel).

In addition to the shared buffer pool and the dedicated buffer pool, there is also a small ingress global headroom buffer pool that is reserved and is not configurable.

Copyright © 2018, Juniper Networks, Inc.

When contention for buffer space occurs, the switch uses an internal algorithm to ensure that the buffer pools are distributed fairly among competing flows. When traffic for a given flow exceeds the amount of dedicated port buffer reserved for that flow, the flow begins to consume memory from the dynamic shared buffer pool. Competing flows compete for shared buffer memory with other flows that also have exhausted their dedicated buffers. When there is no congestion, there are no competing flows.

- Buffer Handling of Lossless Flows (PFC) Versus Ethernet PAUSE on page 572
- Shared Buffer Pool and Partitions on page 572
- Dedicated Port Buffer Pool and Buffer Allocation to Queues on page 574
- Trade-off Between Shared Buffer Space and Dedicated Buffer Space on page 577
- Order of Buffer Consumption on page 578

Buffer Handling of Lossless Flows (PFC) Versus Ethernet PAUSE

When we discuss lossless buffers in the following sections, we mean buffers that handle traffic on which you enable PFC to ensure lossless transport. The lossless buffers are not used for best-effort traffic on a link on which you enable Ethernet PAUSE (IEEE 802.3x). The lossless ingress and egress shared buffers, and the ingress lossless headroom shared buffer, are used only for traffic on which you enable PFC.

NOTE: **To support lossless flows, you must configure the appropriate data center bridging capabilities (PFC, DCBX, and ETS) and scheduling properties.**

NOTE: **OCX Series switches do not support PFC or lossless transport. OCX Series switches support symmetric Ethernet PAUSE.**

Shared Buffer Pool and Partitions

The shared buffer pool is a global memory space that all of the ports on the switch share dynamically as they need buffers. The switch uses the shared buffer pool to absorb traffic bursts after the dedicated buffer pool for a port is exhausted.

You can divide both the ingress shared buffer pool and the egress shared buffer pool into three partitions to allocate percentages of each buffer pool to different types of traffic. When you partition the ingress or egress shared buffer pool:

- If you explicitly configure one ingress shared buffer partition, you must explicitly configure all three ingress shared buffer partitions. (You either explicitly configure all three ingress partitions or you use the default setting for all three ingress partitions.)

  If you explicitly configure one egress shared buffer partition, you must explicitly configure all three egress shared buffer partitions. (You either explicitly configure all three egress partitions or you use the default setting for all three egress partitions.)

  The switch returns a commit error if you do not explicitly configure all three partitions when configuring the ingress or egress shared buffer partitions.

Copyright © 2018, Juniper Networks, Inc.

- The combined percentages of the three ingress shared buffer partitions must total exactly 100 percent.

  The combined percentages of the three egress shared buffer partitions must total exactly 100 percent.

  When you explicitly configure ingress or egress shared buffer partitions, the switch returns a commit error if the total percentage of the three partitions does not equal 100 percent.

- If you explicitly partition one set of shared buffers, you do not have to explicitly partition the other set of shared buffers. For example, you can explicitly configure the ingress shared buffer partitions and use the default egress shared buffer partitions. However, if you change the buffer partitions for the ingress buffer pool to match the expected types of traffic flows, you would probably also want to change the buffer partitions for the egress buffer pool to match those traffic flows.

You can configure the percentage of available unreserved buffer space allocated to the shared buffer pool. Space that you do not allocate to the shared buffer pool is added to the dedicated buffer pool and divided equally among the ports. The default configuration allocates 100 percent of the unreserved ingress and egress buffer space to the shared buffers.

Configuring the ingress and egress shared buffer pool partitions enables you to allocate more buffers to the types of traffic your network predominantly carries, and fewer buffers to other traffic.

Ingress Shared Buffer Pool Partitions

You can configure three ingress buffer pool partitions:

- Lossless buffers—Shared buffer pool for all lossless ingress traffic. We recommend 5 percent as the minimum value for lossless buffers.
- Lossless headroom buffers—Shared buffer pool for packets received while a pause is asserted. If PFC is enabled on priorities on a port, when the port sends a pause message to the connected peer, the port uses the headroom buffers to store the packets that arrive between the time the port sends the pause message and the time the last packet arrives after the peer pauses traffic. The minimum value for lossless headroom buffers is 0 (zero) percent. (Lossless headroom buffers are the only buffers for which the recommended value can be less than 5 percent.)
- Lossy buffers—Shared buffer pool for all best-effort ingress traffic (best-effort unicast, multidestination, and strict-high priority traffic). We recommend 5 percent as the minimum value for best-effort buffers.

The combined percentage values of the ingress lossless, lossless headroom, and best-effort buffer partitions must total exactly 100 percent. If the buffer percentages total more than 100 percent or less than 100 percent, the switch returns a commit error. If you explicitly configure an ingress shared buffer partition, you must explicitly configure all three ingress buffer partitions, even if the lossless headroom buffer partition has a value of 0 (zero) percent.

Copyright © 2018, Juniper Networks, Inc.

Egress Shared Buffer Pool Partitions

You can configure three egress buffer pool partitions:

- Lossless buffers—Shared buffer pool for all lossless egress queues. We recommend 5 percent as the minimum value for lossless buffers.
- Lossy buffers—Shared buffer pool for all best-effort egress queues (best-effort unicast, and strict-high priority queues). We recommend 5 percent as the minimum value for best-effort buffers.
- Multicast buffers—Shared buffer pool for all multidestination (multicast, broadcast, and destination lookup fail) egress queues. We recommend 5 percent as the minimum value for multicast buffers.

The combined percentage values of the egress lossless, lossy, and multicast buffer partitions must total exactly 100 percent. If the buffer percentages total more than 100 percent or less than 100 percent, the switch returns a commit error. All egress buffer partitions must be explicitly configured and should have a value of at least 5 percent. If you explicitly configure an egress shared buffer partition, you must explicitly configure all three egress buffer partitions, and each partition should have a value of at least 5 percent.

NOTE: QFX5200-32C does not replicate all multicast streams when two or more downstream interface packet sizes are higher than ~6k and have an 1000pps packet ingress rate. This is because the number of working flows on QFX5200-32C is indirectly proportional to the packet size and directly proportional to available multicast shared buffers.

Dedicated Port Buffer Pool and Buffer Allocation to Queues

The global dedicated buffer pool is memory that is allocated equally to each port, so each port receives a guaranteed minimum amount of buffer space. Dedicated buffers are not shared among ports. Each port receives an equal proportion of the dedicated buffer pool.

The amount of dedicated buffer space is not user-configurable and depends on the percentage of available nonreserved buffers allocated to the shared buffers. (The dedicated buffer space is equal to the minimum reserved port buffers plus the remainder of the available nonreserved buffers that are not allocated to the shared buffer pool.)

When traffic enters and exits the switch, the switch ports use their dedicated buffers to store packets. If the dedicated buffers are not sufficient to handle the traffic, the switch uses shared buffers. The only way to increase the dedicated buffer pool is to decrease the shared buffer pool from its default value of 100 percent of available unreserved buffers.

NOTE: If 100 percent of the available unreserved buffers are allocated to the shared buffer pool, the switch still reserves a minimum dedicated buffer pool.

Copyright © 2018, Juniper Networks, Inc.

The larger the shared buffer pool, the better the burst absorption across the ports. The larger the dedicated buffer pool, the larger the amount of dedicated buffer space for each port. The greater the dedicated buffer space, the less likely that congestion on one port can affect traffic on another port, because the traffic does not need to use as much shared buffer space.

Allocating Dedicated Port Buffers to Queues

You can divide the dedicated buffer allocation for an egress port among the port queues by including the **buffer-size** statement in the scheduler configuration. This enables you to control the egress port dedicated buffer allocation on a per-port, per-queue basis. (For example, this enables you to dedicate more buffer space to queues that transport lossless traffic, or to stop the port from reserving buffers for queues that do not carry traffic.) Egress dedicated port buffer allocation is a hierarchical structure that allocates a global dedicated buffer pool evenly among ports, and then divides the allocation for each port among the port queues.

By default, ports divide their allocation of dedicated buffers among their egress queues in the same proportion as the default scheduler sets the minimum guaranteed transmission rates (the **transmit-rate** option) for traffic. Only the queues included in the default scheduler receive bandwidth and dedicated buffers, in the proportions shown in Table 108 on page 575:

Table 108: Default Dedicated Buffer Allocation to Egress Queues (Based on Default Scheduler)

Forwarding Class	Queue	Minimum Guaranteed Bandwidth (transmit-rate)	Proportion of Reserved Dedicated Port Buffers
best-effort	0	5%	5%
fcoe	3	35%	35%
no-loss	4	35%	35%
network-control	7	5%	5%
mcast	8	20%	20%

In the default configuration, no egress queues other than the ones shown in Table 108 on page 575 receive an allocation of dedicated port buffers.

NOTE: The switch uses hierarchical scheduling to control port and queue bandwidth allocation, as described in "Understanding CoS Hierarchical Port Scheduling (ETS)" on page 192 and shown in "Example: Configuring CoS Hierarchical Port Scheduling (ETS)" on page 198. For egress queue buffer size configuration, when you attach a traffic control profile (includes the queue scheduler information) to a port, the dedicated egress buffers on the port are divided among the queues as configured in the scheduler.

Copyright © 2018, Juniper Networks, Inc.

If you do not want to use the default allocation of dedicated port buffers to queues, use the **buffer-size** option in the scheduler that is attached to the port to configure the queue allocation. You can configure the dedicated buffer allocation to queues in two ways:

- As a percentage—The queue receives the specified percentage of dedicated port buffers when the queue is mapped to the scheduler and the scheduler is attached to a port.
- As a remainder—After the port services the queues that have an explicit percentage buffer size configuration, the remaining dedicated port buffer space is divided equally among the other queues to which a scheduler is attached. (No default or explicit scheduler for a queue means no dedicated buffer allocation for that queue.) If you configure a scheduler and you do not specify a buffer size as a percentage, *remainder* is the default setting.

NOTE: **The total of all of the explicitly configured buffer size percentages for all of the queues on a port cannot exceed 100 percent.**

Configuring Dedicated Port Buffer Allocation to Queues

In a port configuration that includes multiple forwarding class sets, with multiple forwarding classes mapped to multiple schedulers, the allocation of port dedicated buffers to queues depends on the mix of queues with buffer sizes configured as explicit percentages and queues configured with (or defaulted to) the **remainder** option.

The best way to demonstrate how using the percentage and remainder options affects dedicated port buffer allocation to queues is by showing an example of queue buffer allocation, and then showing how the queue buffer allocation changes when you add another forwarding class (queue) to the port.

Table 109 on page 576 shows an initial configuration that includes four forwarding class sets, the five default forwarding classes (mapped to the five default queues for those forwarding classes), the **buffer-size** option configuration, and the resulting buffer allocation for each queue. Table 110 on page 577 shows the same configuration after we add another forwarding class (best-effort-2, mapped to queue 1) to the best-effort forwarding class set. Comparing the buffer allocations in each table shows you how adding another queue affects buffer allocation when you use remainders and explicit percentages to configure the buffer allocation for different queues.

Table 109: Egress Queue Dedicated Buffer Allocation (Example 1)

Forwarding Class Set (Priority Group)	Forwarding Class	Queue	Scheduler Buffer Size Configuration	Buffer Allocation per Queue (Percentage)
fc-set-be	best-effort	0	10%	10%
fc-set-lossless	fcoe	3	20%	20%
	no-loss	4	40%	40%

Copyright © 2018, Juniper Networks, Inc.

Table 109: Egress Queue Dedicated Buffer Allocation (Example 1) (continued)

Forwarding Class Set (Priority Group)	Forwarding Class	Queue	Scheduler Buffer Size Configuration	Buffer Allocation per Queue (Percentage)
fc-set-strict-high	network-control	7	remainder	15%
fc-set-mcast	mcast	8	remainder	15%

In this first example, 70 percent of the egress port dedicated buffer pool is explicitly allocated to the best-effort, fcoe, and no-loss queues. The remaining 30 percent of the port dedicated buffer pool is split between the two queues that use the **remainder** option (network-control and mcast), so each queue receives 15 percent of the dedicated buffer pool.

Now we add another forwarding class (queue) to the best-effort priority group (fc-set-be) and configure it with a buffer size of *remainder* instead of configuring a specific percentage. Because a third queue now shares the remaining dedicated buffers, the queues that share the remainder receive fewer dedicated buffers, as shown in Table 110 on page 577. The queues with explicitly configured percentages receive the configured percentage of dedicated buffers.

Table 110: Egress Queue Dedicated Buffer Allocation with Another Remainder Queue (Example 2)

Priority Group (fc-set)	Forwarding Class	Queue	Scheduler Buffer Size Configuration	Buffer Allocation per Queue (Percentage)
fc-set-be	best-effort	0	10%	10%
	best-effort-2	1	remainder	10%
fc-set-lossless	fcoe	3	20%	20%
	no-loss	4	40%	40%
fc-set-strict-high	network-control	7	remainder	10%
fc-set-mcast	mcast	8	remainder	10%

The two tables show how the port divides the dedicated buffer space that remains after servicing the queues that have an explicitly configured percentage of dedicated buffer space.

Trade-off Between Shared Buffer Space and Dedicated Buffer Space

The trade-off between shared buffer space and dedicated buffer space is:

- Shared buffers provide better absorption of traffic bursts because there is a larger pool of dynamic buffers that ports can use as needed to handle the bursts. However, all

flows that exhaust their dedicated buffer space compete for the shared buffer pool. A larger shared buffer pool means a smaller dedicated buffer pool, and therefore more competition for the shared buffer pool because more flows exhaust their dedicated buffer allocation. Too much shared buffer space results in no single flow receiving very much shared buffer space, to maintain fairness when many flows contend for that space.

- Dedicated buffers provide guaranteed buffer space to each port. The larger the dedicated buffer pool, the less likely that congestion on one port affects traffic on another port, because the traffic does not need to use as much shared buffer space. However, less shared buffer space means less ability to dynamically absorb traffic bursts.

For optimal burst absorption, the switch needs enough dedicated buffer space to avoid persistent competition for the shared buffer space. When fewer flows compete for the shared buffers, the flows that need shared buffer space to absorb bursts receive more of the shared buffer because fewer flows exhaust their dedicated buffer space.

The default configuration and the configurations recommended for different traffic scenarios allocate 100 percent of the user-configurable memory space to the global shared buffer pool because the amount of space reserved for dedicated buffers provides enough space to avoid persistent competition for dynamic shared buffers. This results in fewer flows competing for the shared buffers, so the competing flows receive more of the buffer space.

Order of Buffer Consumption

The total buffer pool is divided into ingress and egress shared buffer pools and dedicated buffer pools. When traffic flows through the switch, the buffer space is used in a particular order that depends on the type of traffic.

On ingress, the order of buffer consumption is:

- Best-effort unicast traffic:
  1. Dedicated buffers
  2. Shared buffers
  3. Global headroom buffers (very small)
- Lossless unicast traffic:
  1. Dedicated buffers
  2. Shared buffers
  3. Lossless headroom buffers
  4. Global headroom buffers (very small)
- Multidestination traffic:
  1. Dedicated buffers
  2. Shared buffers

 Copyright © 2018, Juniper Networks, Inc.

3. Global headroom buffers (very small)

On egress, the order of buffer consumption is the same for unicast best-effort, lossless unicast, and multidestination traffic:

- Dedicated buffers
- Shared buffers

In all cases on all ports, the switch uses the dedicated buffer pool first and the shared buffer pool only after the dedicated buffer pool for the port or queue is exhausted. This reserves the maximum amount of dynamic shared buffer space to absorb traffic bursts.

Default Buffer Pool Values

You can view the default or configured ingress and egress buffer pool values in KB units using the **show class-of-service shared-buffer** operational command. You can view the configured shared buffer pool values in percent units using the **show configuration class-of-service shared-buffer** operational command.

This section provides the default total buffer, shared buffer, and dedicated buffer values.

- Total Buffer Pool Size on page 579
- Shared Buffer Pool Default Values on page 579
- Dedicated Buffer Pool Default Values on page 582

Total Buffer Pool Size

The total buffer pool is common memory that has separate ingress and egress accounting, so the full buffer pool is available from both the ingress and egress perspective. The total buffer pool consists of the dedicated buffer space and the shared buffer space. The size of the total buffer pool is not user-configurable, but the allocation of buffer space to the dedicated and shared buffer pools is user-configurable.

On QFX3500 and QFX3600 switches, the combined total size of the ingress and egress buffer pools is approximately 9 MB (exactly 9360 KB).

On QFX5100, EX4600, and OCX Series switches, the combined total size of the ingress and egress buffer pools is approximately 12 MB (exactly 12480 KB).

On QFX5110 and QFX5200-32C switches, the combined total size of the ingress and egress buffer pools is approximately 16 MB.

On QFX5200-48Y switches, the combined total size of the ingress and egress buffer pools is approximately 22 MB.

On QFX5210 switches, the combined total size of the ingress and egress buffer pools is approximately 42 MB.

Shared Buffer Pool Default Values

Some switches have a larger shared buffer pool than other switches. However, the allocation of shared buffer space to the individual ingress and egress buffer pools is the

same on a percentage basis, even though the absolute values are different. For example, the default ingress lossless buffer is 9 percent of the total shared ingress buffer space on all of the switches, even though the default absolute value of the ingress lossless buffer differs from switch to switch.

This section describes the default values in percent and in KB for the shared ingress and shared egress buffers.

- Shared Ingress Buffer Default Values on page 580
- Shared Egress Buffer Default Values on page 581

Shared Ingress Buffer Default Values

Table 111 on page 580 shows the default ingress shared buffer allocation values in KB units for QFX5210 switches.

Table 111: QFX5210 Switch Default Shared Ingress Buffer Values (KB)

Total Shared Ingress Buffer	Lossless Buffer	Lossless-Headroom Buffer	Lossy Buffer
29224	2630.16	13150.80	13443.04

Table 112 on page 580 shows the default ingress shared buffer allocation values in KB units for QFX5200-48Y switches.

Table 112: QFX5200-48Y Switch Default Shared Ingress Buffer Values (KB)

Total Shared Ingress Buffer	Lossless Buffer	Lossless-Headroom Buffer	Lossy Buffer
19154.69	1723.92	8619.61	8811.16

Table 113 on page 580 shows the default ingress shared buffer allocation values in KB units for QFX5110 and QFX5200-32C switches.

Table 113: QFX5110 and QFX5200-32C Switch Default Shared Ingress Buffer Values (KB)

Total Shared Ingress Buffer	Lossless Buffer	Lossless-Headroom Buffer	Lossy Buffer
11779.62	1060.17	5300.83	5418.63

Table 114 on page 581 shows the default ingress shared buffer allocation values in KB units for QFX5100, EX4600, and OCX Series switches.

Copyright © 2018, Juniper Networks, Inc.

Table 114: QFX5100, EX4600, and OCX Series Switch Default Shared Ingress Buffer Values (KB)

Total Shared Ingress Buffer	Lossless Buffer	Lossless-Headroom Buffer	Lossy Buffer
9567.19 KB	861.05 KB	4305.23 KB	4400.91 KB

Table 115 on page 581 shows the default ingress shared buffer allocation values in KB units for QFX3500 and QFX3600 switches.

Table 115: QFX3500 and QFX3600 Switch Default Shared Ingress Buffer Values (KB)

Total Shared Ingress Buffer	Lossless Buffer	Lossless-Headroom Buffer	Lossy Buffer
7202 KB	648.18 KB	3240.9 KB	3312.92 KB

Table 116 on page 581 shows the default ingress shared buffer allocation values as percentages for all switches. (If you change the default shared buffer allocation, you configure the change as a percentage.)

Table 116: Default Shared Ingress Buffer Values (Percentage)

Total Shared Ingress Buffer	Lossless Buffer	Lossless-Headroom Buffer	Lossy Buffer
100%	9%	45%	46%

Shared Egress Buffer Default Values

Table 117 on page 581 shows the default egress shared buffer allocation values in KB units for QFX5210 switches.

Table 117: QFX5210 Switch Default Shared Egress Buffer Values (KB)

Total Shared Egress Buffer	Lossless Buffer	Lossy Buffer	Multicast Buffer
28080	14040	8704.80	5335.20

Table 118 on page 581 shows the default egress shared buffer allocation values in KB units for QFX5200-48Y switches.

Table 118: QFX5200-48Y Switch Default Shared Egress Buffer Values (KB)

Total Shared Egress Buffer	Lossless Buffer	Lossy Buffer	Multicast Buffer
19115.69	9557.84	5925.86	3631.98

Copyright © 2018, Juniper Networks, Inc.

Table 119 on page 582 shows the default egress shared buffer allocation values in KB units for QFX5110 and QFX5200-32C switches.

Table 119: QFX5110 and QFX5200-32C Switch Default Shared Egress Buffer Values (KB)

Total Shared Egress Buffer	Lossless Buffer	Lossy Buffer	Multicast Buffer
11232	5616	3481.92	2134

NOTE: QFX5200-32C does not replicate all multicast streams when two or more downstream interface packet sizes are higher than ~6k and have an 1000pps packet ingress rate. This is because the number of working flows on QFX5200-32C is indirectly proportional to the packet size and directly proportional to available multicast shared buffers.

Table 120 on page 582 shows the default egress shared buffer allocation values in KB units for QFX5100, EX4600, and OCX Series switches.

Table 120: QFX5100, EX4600, and OCX Series Switch Default Shared Egress Buffer Values (KB)

Total Shared Egress Buffer	Lossless Buffer	Lossy Buffer	Multicast Buffer
8736 KB	4368 KB	2708.16 KB	1659.84 KB

Table 121 on page 582 shows the default egress shared buffer allocation values in KB units.

Table 121: QFX3500 and QFX3600 Switch Default Shared Egress Buffer Values (KB)

Total Shared Egress Buffer	Lossless Buffer	Lossy Buffer	Multicast Buffer
6656 KB	3328 KB	2063.36 KB	1264.64 KB

Table 122 on page 582 shows the default egress shared buffer allocation values for all switches as percentages.

Table 122: Default Shared Egress Buffer Values (Percentage)

Total Shared Egress Buffer	Lossless Buffer	Lossy Buffer	Multicast Buffer
100%	50%	31%	19%

Dedicated Buffer Pool Default Values

The system reserves ingress and egress dedicated buffer pools that are divided equally among the switch ports. By default, the system allocates 100 percent of the available

Copyright © 2018, Juniper Networks, Inc.

unreserved buffer space to the shared buffer pool. If you reduce the percentage of available unreserved buffer space allocated to the shared buffer pool, the remaining unreserved buffer space is added to the dedicated buffer pool allocation. You configure the amount of dedicated buffer pool space by reducing (or increasing) the percentage of buffer space allocated to the shared buffer pool. You do not directly configure the dedicated buffer pool allocation.

Table 123 on page 583 shows the default ingress and egress dedicated buffer pool values in KB units for QFX5210, QFX5200, QFX5110, QFX5100, QFX3500, QFX3600, EX4600, and OCX Series switches.

Table 123: Default Ingress and Egress Dedicated Buffer Pool Values KB) per Switch (

Dedicated Buffer Type	QFX5210	QFX5200-48Y	QFX5110, QFX5200-32C	QFX5100, EX4600, OCX Series	QFX3500, QFX3600
Ingress	14040	3373.50	4860.38	2912.81	2158
Egress	15184	3412.50	5408	3744	2704

Shared Buffer Configuration Recommendations for Different Network Traffic Scenarios

The way you configure the shared buffer pool depends on the mix of traffic on your network. This section provides shared buffer configuration recommendations for five basic network traffic scenarios:

- Balanced traffic—The network carries a balanced mix of unicast best-effort, lossless, and multicast traffic. (This is the default configuration.)
- Best-effort unicast traffic—The network carries mostly unicast best-effort traffic.
- Best-effort traffic with Ethernet PAUSE (IEEE 802.3X) enabled—The network carries mostly best-effort traffic with Ethernet PAUSE enabled on the links.
- Best-effort multicast traffic—The network carries mostly multicast best-effort traffic.
- Lossless traffic—The network carries mostly lossless traffic (traffic on which PFC is enabled).

NOTE: Lossless traffic is defined as traffic on which you enable PFC to ensure lossless transport. Lossless traffic does not refer to best-effort traffic on a link on which you enable Ethernet PAUSE. Start with the recommended profiles for each network traffic scenario, and adjust them if necessary for your network traffic conditions.

OCX Series switches do not support lossless transport or PFC. In this topic, references to lossless transport do not apply to OCX Series switches. OCX Series switches support symmetric Ethernet PAUSE.

CAUTION: **Changing the buffer configuration is a disruptive event. Traffic stops on *all* ports until buffer reprogramming is complete. This includes changing the default configuration to one of the recommended configurations.**

Because you configure buffer allocations in percentages, the recommended allocations for each network traffic scenario are valid for all QFX Series switches, EX4600 switches, and OCX Series switches. Use one of the following recommended shared buffer configurations for your network traffic conditions. Start with a recommended configuration, then make small adjustments to the buffer allocations to fine-tune the buffers if necessary as described in "Optimizing Buffer Configuration" on page 587.

- Balanced Traffic (Default Configuration) on page 584
- Best-Effort Unicast Traffic on page 585
- Ethernet PAUSE Traffic on page 585
- Best-Effort Multicast (Multidestination) Traffic on page 586
- Lossless Traffic on page 586

Balanced Traffic (Default Configuration)

The default shared buffer configuration is optimized for networks that carry a balanced mix of best-effort unicast, lossless, and multidestination (multicast, broadcast, and destination lookup fail) traffic. The default class-of-service (CoS) configuration is also optimized for networks that carry a balanced mix of traffic.

NOTE: **On OCX Series switches, the default CoS configuration optimization does not include lossless traffic because OCX Series switches do not support lossless transport.**

Except on OCX Series switches, we recommend that you use the default shared buffer configuration for networks that carry a balanced mix of traffic, especially if you are using the default CoS settings. Table 124 on page 584 shows the default ingress shared buffer allocations:

Table 124: Default Ingress Shared Buffer Configuration

Total Shared Ingress Buffer	Lossless Buffer	Lossless-Headroom Buffer	Lossy Buffer
100%	9%	45%	46%

Table 125 on page 585 shows the default egress shared buffer allocations:

Copyright © 2018, Juniper Networks, Inc.

Table 125: Default Egress Shared Buffer Configuration

Total Shared Egress Buffer	Lossless Buffer	Lossy Buffer	Multicast Buffer
100%	50%	31%	19%

Best-Effort Unicast Traffic

If your network carries mostly best-effort (lossy) unicast traffic, then the default shared buffer configuration allocates too much buffer space to support lossless transport. Instead of wasting those buffers, we recommend that you use the following ingress shared buffer settings (see Table 126 on page 585) and egress shared buffer settings (see Table 127 on page 585):

Table 126: Recommended Ingress Shared Buffer Configuration for Networks with Mostly Best-Effort Unicast Traffic

Total Shared Ingress Buffer	Lossless Buffer	Lossless-Headroom Buffer	Lossy Buffer
100%	5%	0%	95%

Table 127: Recommended Egress Shared Buffer Configuration for Networks with Mostly Best-Effort Unicast Traffic

Total Shared Egress Buffer	Lossless Buffer	Lossy Buffer	Multicast Buffer
100%	5%	75%	20%

See "Example: Recommended Configuration of the Shared Buffer Pool for Networks with Mostly Best-Effort Unicast Traffic" on page 592 for an example that shows you how to configure the recommended buffer settings shown in Table 126 on page 585 and Table 127 on page 585.

Ethernet PAUSE Traffic

If your network carries mostly best-effort (lossy) traffic *and* enables Ethernet PAUSE on links, then the default shared buffer configuration allocates too much buffer space to the shared ingress buffer (Ethernet PAUSE traffic uses the dedicated buffers instead of shared buffers) and not enough space to the lossless-headroom buffers. We recommend that you use the following ingress shared buffer settings (see Table 128 on page 585) and egress shared buffer settings (see Table 129 on page 586):

Table 128: Recommended Ingress Shared Buffer Configuration for Networks with Mostly Best-Effort Traffic and Ethernet PAUSE Enabled

Total Shared Ingress Buffer	Lossless Buffer	Lossless-Headroom Buffer	Lossy Buffer
70%	5%	80%	15%

Copyright © 2018, Juniper Networks, Inc.

Table 129: Recommended Egress Shared Buffer Configuration for Networks with Mostly Best-Effort Traffic and Ethernet PAUSE Enabled

Total Shared Egress Buffer	Lossless Buffer	Lossy Buffer	Multicast Buffer
100%	5%	75%	20%

See "Example: Recommended Configuration of the Shared Buffer Pool for Networks with Mostly Best-Effort Traffic on Links with Ethernet PAUSE Enabled" on page 598 for an example that shows you how to configure the recommended buffer settings shown in Table 126 on page 585 and Table 127 on page 585.

Best-Effort Multicast (Multidestination) Traffic

If your network carries mostly best-effort (lossy) multicast traffic, then the default shared buffer configuration allocates too much buffer space to support lossless transport. Instead of wasting those buffers, we recommend that you use the following ingress shared buffer settings (see Table 130 on page 586) and egress shared buffer settings (see Table 131 on page 586):

Table 130: Recommended Ingress Shared Buffer Configuration for Networks with Mostly Best -Effort Multicast Traffic

Total Shared Ingress Buffer	Lossless Buffer	Lossless-Headroom Buffer	Lossy Buffer
100%	5%	0%	95%

Table 131: Recommended Egress Shared Buffer Configuration for Networks with Mostly Best-Effort Multicast Traffic

Total Shared Egress Buffer	Lossless Buffer	Lossy Buffer	Multicast Buffer
100%	5%	20%	75%

See "Example: Recommended Configuration of the Shared Buffer Pool for Networks with Mostly Multicast Traffic" on page 605 for an example that shows you how to configure the recommended buffer settings shown in Table 130 on page 586 and Table 131 on page 586.

Lossless Traffic

If your network carries mostly lossless traffic, then the default shared buffer configuration allocates too much buffer space to support best-effort traffic. Instead of wasting those buffers, we recommend that you use the following ingress shared buffer settings (see Table 132 on page 587) and egress shared buffer settings (see Table 133 on page 587):

Copyright © 2018, Juniper Networks, Inc.

Table 132: Recommended Ingress Shared Buffer Configuration for Networks with Mostly Lossless Traffic

Total Shared Ingress Buffer	Lossless Buffer	Lossless-Headroom Buffer	Lossy Buffer
100%	15%	80%	5%

Table 133: Recommended Egress Shared Buffer Configuration for Networks with Mostly Lossless Traffic

Total Shared Egress Buffer	Lossless Buffer	Lossy Buffer	Multicast Buffer
100%	90%	5%	5%

See "Example: Recommended Configuration of the Shared Buffer Pool for Networks with Mostly Lossless Traffic" on page 611 for an example that shows you how to configure the recommended buffer settings shown in Table 132 on page 587 and Table 133 on page 587.

Optimizing Buffer Configuration

Starting from the default configuration or from a recommended buffer configuration, you can further optimize the buffer allocation to best support the mix of traffic on your network. Adjust the settings gradually to fine-tune the shared buffer allocation. Use caution when adjusting the shared buffer configuration, not just when you fine-tune the ingress and egress buffer partitions, but also when you fine-tune the total ingress and egress shared buffer percentage. (Remember that if you allocate less than 100 percent of the available buffers to the shared buffers, the remaining buffers are added to the dedicated buffers). Tuning the buffers incorrectly can cause problems such as ingress port congestion.

CAUTION: **Changing the buffer configuration is a disruptive event. Traffic stops on *all* ports until buffer reprogramming is complete.**

The relationship between the sizes of the ingress buffer pool and the egress buffer pool affects when and where packets are dropped. The buffer pool sizes include the shared buffers and the dedicated buffers. In general, if there are more ingress buffers than egress buffers, the switch can experience ingress port congestion because egress queues fill before ingress queues can empty.

Use the **show class-of-service shared-buffer** operational command to see the sizes in kilobytes (KB) of the dedicated and shared buffers and of the shared buffer partitions.

For best-effort traffic (unicast and multidestination), the combined ingress lossy shared buffer partition and ingress dedicated buffers must be *less than* the combined egress lossy and multicast shared buffer partitions plus the egress dedicated buffers. This prevents ingress port congestion by ensuring that egress best-effort buffers are deeper than ingress best-effort buffers, and ensures that if packets are dropped, they are dropped

at the egress queues. (Packets dropping at the ingress prevents the egress schedulers from working properly.)

For lossless traffic (traffic on which you enable PFC), the combined ingress lossless shared buffer partition and a reasonable portion of the ingress headroom buffer partition, plus the dedicated buffers, must be *less than* the total egress lossless shared buffer partition and dedicated buffers. (A reasonable portion of the ingress headroom buffer is approximately 20 to 25 percent of the buffer space, but this varies depending on how much buffer headroom is required to support the lossless traffic.) When these conditions are met, if there is ingress port congestion, the ingress port congestion triggers PFC on the ingress port to prevent packet loss. If the total lossless ingress buffers exceed the total lossless egress buffers, packets could be dropped at the egress instead of PFC being applied at the ingress to prevent packet loss.

NOTE: If you commit a buffer configuration for which the switch does not have sufficient resources, the switch might log an error instead of returning a commit error. In that case, a syslog message is displayed on the console. For example:

```
user@host# commit
configuration check succeeds

Message from syslogd@host at Jun 13 11:11:10  ...
host dc-pfe: Not enough Ingress Lossless headroom.(Already allocated
more). Dedicated : 14340 Lossy : 47100 Lossless 4239 Headroom 21195
Avail : 20781
commit complete
```

If the buffer configuration commits but you receive a syslog message that indicates the configuration cannot be implemented, you can:

- Reconfigure the buffers or reconfigure other parameters (for example, the PFC configuration, which affects the need for lossless headroom buffers and lossless buffers—the more priorities you pause, the more lossless and lossless headroom buffer space you need), then attempt the commit operation again.
- Roll back the switch to the last successful configuration.

If you receive a syslog message that says the buffer configuration cannot be implemented, you must take corrective action. If you do not fix the configuration or roll back to a previous successful configuration, the system behavior is unpredictable.

General Buffer Configuration Rules and Considerations

Keep the following rules and considerations in mind when you configure the buffers:

Copyright © 2018, Juniper Networks, Inc.

- Changing the buffer configuration is a disruptive event. Traffic stops on *all* ports until buffer reprogramming is complete.
- If you configure the ingress or egress shared buffer percentages as less than 100 percent, the remaining percentage of buffer space is added to the dedicated buffer pool.
- The sum of all of the ingress shared buffer partitions must equal 100 percent. Each partition must be configured with a value of at least 5 percent except the lossless headroom buffer, which can have a value of 0 percent.
- The sum of all of the egress shared buffer partitions must equal 100 percent. Each partition must be configured with a value of at least 5 percent.
- Lossless and lossless headroom shared buffers serve traffic on which you enable PFC, and do not serve traffic subject to Ethernet PAUSE.
- The switch uses the dedicated buffer pool first and the shared buffer pool only after the dedicated buffer pool for a port or queue is exhausted.
- Too little dedicated buffer space results in too much competition for shared buffer space.
- Too much dedicated buffer space results in poorer burst absorption because there is less available shared buffer space.
- Always check the syslog messages after you commit a new buffer configuration.
- The optimal buffer configuration for your network depends on the types of traffic on the network. If your network carries less traffic of a certain type (for example, lossless traffic), then you can reduce the size of the buffers allocated to that type of traffic (for example, you can reduce the sizes of the lossless and lossless headroom buffers).

Related Documentation

- Example: Recommended Configuration of the Shared Buffer Pool for Networks with Mostly Best-Effort Unicast Traffic on page 592
- Example: Recommended Configuration of the Shared Buffer Pool for Networks with Mostly Best-Effort Traffic on Links with Ethernet PAUSE Enabled on page 598
- Example: Recommended Configuration of the Shared Buffer Pool for Networks with Mostly Multicast Traffic on page 605
- Example: Recommended Configuration of the Shared Buffer Pool for Networks with Mostly Lossless Traffic on page 611
- Example: Configuring Queue Schedulers on page 169
- Configuring Global Ingress and Egress Shared Buffers on page 590

Configuring Global Ingress and Egress Shared Buffers

Although the switch reserves some buffer space to ensure a minimum memory allocation for ports and queues, you can configure how the system uses the rest of the buffer space to optimize the buffer allocation for your particular mix of network traffic. The global shared buffer pool is memory space that all of the ports on the switch share dynamically as they need buffers. You can allocate global shared memory space to different types of ingress and egress buffers to better support different mixes of network traffic.

CAUTION: **Changing the buffer configuration is a disruptive event. Traffic stops on *all* ports until buffer reprogramming is complete.**

Use the default shared buffer settings (for a network with a balanced mix of lossless, best-effort, and multicast traffic) or one of the recommended shared buffer configurations for your mix of network traffic (mostly best-effort unicast traffic, mostly best-effort traffic on links enabled for Ethernet PAUSE, mostly multicast traffic, or mostly lossless traffic). Either the default configuration or one of the recommended configurations provides a buffer allocation that satisfies the needs of most networks.

After starting from one of the recommended configurations, you can fine-tune the shared buffer settings, but do so with caution to prevent traffic loss due to buffer misconfiguration.

You can configure the percentage of available (user-configurable) buffer space allocated to the global shared buffers. Any space that you do not allocate to the global shared buffer pool is added to the dedicated buffer pool. The default configuration allocates 100 percent of the available buffer space to the global shared buffers.

You can partition the ingress and egress shared buffer pools to allocate more buffers to the types of traffic your network predominantly carries, and fewer buffers to other traffic. From the buffer space allocated to the ingress shared buffer pool, you can allocate space to:

- Lossless buffers—Percentage of shared buffer pool for all lossless ingress traffic. The minimum value for the lossless buffers is 5 percent.
- Lossless headroom buffers—Percentage of shared buffer pool for packets received while a pause is asserted. If Ethernet PAUSE is configured on a port or if priority-based flow control (PFC) is configured on priorities on a port, when the port sends a pause message to the connected peer, the port uses the headroom buffers to store the packets that arrive between the time the port sends the pause message and the time the last packet arrives after the peer pauses traffic. The minimum value for the lossless headroom buffers is 0 (zero) percent. (Lossless headroom buffers are the only buffers that can have a minimum value of less than 5 percent.)
- Lossy buffers—Percentage of shared buffer pool for all best-effort ingress traffic (best-effort unicast, multidestination, and strict-high priority traffic). The minimum value for the lossy buffers is 5 percent.

Copyright © 2018, Juniper Networks, Inc.

The combined percentage values of the ingress lossless, lossless headroom, and lossy buffer partitions must total exactly 100 percent. If the buffer percentages total more than 100 percent or less than 100 percent, the switch returns a commit error. All ingress buffer partitions must be explicitly configured, even when the lossless headroom buffer partition has a value of 0 (zero) percent.

From the buffer space allocated to the egress shared buffer pool, you can allocate space to:

- Lossless buffers—Percentage of shared buffer pool for all lossless egress queues. The minimum value for the lossless buffers is 5 percent.
- Lossy buffers—Percentage of shared buffer pool for all best-effort egress queues (best-effort unicast and strict-high priority queues). The minimum value for the lossy buffers is 5 percent.
- Multicast buffers—Percentage of shared buffer pool for all multidestination (multicast, broadcast, and destination lookup fail) egress queues. The minimum value for the multicast buffers is 5 percent.

The combined percentage values of the egress lossless, lossy, and multicast buffer partitions must total exactly 100 percent. If the buffer percentages total more than 100 percent or less than 100 percent, the switch returns a commit error. All egress buffer partitions must be explicitly configured and must have a value of at least 5 percent.

To configure the shared buffer allocation and partitioning using the CLI:

1. Configure the percentage of available (nonreserved) buffers used for the ingress global shared buffer pool:

   ```
   [edit class-of-service shared-buffer]
   user@switch# set ingress percent percent
   ```

2. Configure the global ingress buffer partitions for lossless, lossless-headroom, and lossy traffic:

   ```
   [edit class-of-service shared-buffer]
   user@switch# set ingress buffer-partition lossless percent percent
   user@switch# set ingress buffer-partition lossless-headroom percent percent
   user@switch# set ingress buffer-partition lossy percent percent
   ```

3. Configure the percentage of available (nonreserved) buffers used for the egress global shared buffer pool:

   ```
   [edit class-of-service shared-buffer]
   user@switch# set egress percent percent
   ```

4. Configure the global egress buffer partitions for lossless, lossy, and multicast queues:

   ```
   [edit class-of-service shared-buffer]
   user@switch# set egress buffer-partition lossless percent percent
   ```

```
user@switch# set egress buffer-partition lossy percent percent
user@switch# set egress buffer-partition multicast percent percent
```

Related Documentation

- Example: Recommended Configuration of the Shared Buffer Pool for Networks with Mostly Best-Effort Unicast Traffic on page 592
- Example: Recommended Configuration of the Shared Buffer Pool for Networks with Mostly Best-Effort Traffic on Links with Ethernet PAUSE Enabled on page 598
- Example: Recommended Configuration of the Shared Buffer Pool for Networks with Mostly Multicast Traffic on page 605
- Example: Recommended Configuration of the Shared Buffer Pool for Networks with Mostly Lossless Traffic on page 611
- Understanding CoS Buffer Configuration on page 568

Example: Recommended Configuration of the Shared Buffer Pool for Networks with Mostly Best-Effort Unicast Traffic

Although the switch reserves some buffer space to ensure a minimum memory allocation for ports and queues, you can configure how the system uses the rest of the buffer space to optimize the buffer allocation for your particular mix of network traffic.

This example shows you the recommended configuration of the global shared buffer pool to support a network that carries mostly best-effort (lossy) unicast traffic. The global shared buffer pool is memory space that all of the ports on the switch share dynamically as they need buffers. You can allocate global shared memory space to different types of buffers to better support different mixes of network traffic.

CAUTION: **Changing the buffer configuration is a disruptive event. Traffic stops on *all* ports until buffer reprogramming is complete.**

Use the default shared buffer settings (for a network with a balanced mix of lossless, best effort, and multicast traffic) or one of the recommended shared buffer configurations for your mix of network traffic (mostly best-effort unicast traffic, mostly best-effort traffic on links enabled for Ethernet PAUSE, mostly multicast traffic, or mostly lossless traffic). Either the default configuration or one of the recommended configurations provides a buffer allocation that satisfies the needs of most networks.

NOTE: **OCX Series switches do not support lossless transport.**

After starting from the recommended configuration, you can fine-tune the shared buffer settings, but do so with caution to prevent traffic loss due to buffer misconfiguration.

- Requirements on page 593
- Overview on page 593

Copyright © 2018, Juniper Networks, Inc.

- Configuration on page 595
- Verification on page 596

Requirements

This example uses the following hardware and software components:

- One switch (this example was tested on a Juniper Networks QFX3500 Switch)
- Junos OS Release 12.3 or later for the QFX Series or Junos OS Release 14.1X53-D20 or later for the OCX Series

Overview

You can configure the percentage of available (user-configurable) buffer space allocated to the global shared buffers. Any space that you do not allocate to the global shared buffer pool is added to the dedicated buffer pool. The default configuration allocates 100 percent of the available buffer space to the global shared buffers.

You can partition the ingress and egress shared buffer pools to allocate more buffers to the types of traffic your network predominantly carries, and fewer buffers to other traffic. From the buffer space allocated to the ingress shared buffer pool, you can allocate space to:

- Lossless buffers—Percentage of shared buffer pool for all lossless ingress traffic. The minimum value for the lossless buffers is 5 percent.
- Lossless headroom buffers—Percentage of shared buffer pool for packets received while a pause is asserted. If Ethernet PAUSE is configured on a port or if priority-based flow control (PFC) is configured on priorities on a port, when the port sends a pause message to the connected peer, the port uses the headroom buffers to store the packets that arrive between the time the port sends the pause message and the time the last packet arrives after the peer pauses traffic. The minimum value for the lossless headroom buffers is 0 (zero) percent. (Lossless headroom buffers are the only buffers that can have a minimum value of less than 5 percent.)
- Lossy buffers—Percentage of shared buffer pool for all best-effort ingress traffic (best-effort unicast, multidestination, and strict-high priority traffic). The minimum value for the lossy buffers is 5 percent.

The combined percentage values of the ingress lossless, lossless headroom, and lossy buffer partitions must total exactly 100 percent. If the buffer percentages total more than 100 percent or less than 100 percent, the switch returns a commit error. All ingress buffer partitions must be explicitly configured, even when the lossless headroom buffer partition has a value of 0 (zero) percent.

From the buffer space allocated to the egress shared buffer pool, you can allocate space to:

- Lossless buffers—Percentage of shared buffer pool for all lossless egress queues. The minimum value for the lossless buffers is 5 percent.

Copyright © 2018, Juniper Networks, Inc.

- Lossy buffers—Percentage of shared buffer pool for all best-effort egress queues (best-effort unicast, and strict-high priority queues). The minimum value for the lossy buffers is 5 percent.
- Multicast buffers—Percentage of shared buffer pool for all multidestination (multicast, broadcast, and destination lookup fail) egress queues. The minimum value for the multicast buffers is 5 percent.

The combined percentage values of the egress lossless, lossy, and multicast buffer partitions must total exactly 100 percent. If the buffer percentages total more than 100 percent or less than 100 percent, the switch returns a commit error. All egress buffer partitions must be explicitly configured and must have a value of at least 5 percent.

To configure the shared buffers to support a network that carries mostly best-effort unicast traffic, more buffer space needs to be allocated to lossy buffers, and less buffer space should be allocated to lossless buffers. This example shows you how to configure the global shared buffer pool allocation that we recommend to support a network that carries mostly unicast traffic.

Topology

Table 134 on page 594 shows the configuration components for this example.

Table 134: Components of the Recommended Shared Buffer Configuration for Best-Effort Unicast Network Topologies

Component	Settings
Hardware	QFX3500 switch
Ingress shared buffer	Percentage of available ingress buffer space allocated to the ingress shared buffer: 100% Percentage of ingress buffer space allocated to lossless traffic (lossless buffer partition): 5% Percentage of ingress buffer space allocated to lossless headroom traffic (lossless-headroom buffer partition): 0% Percentage of ingress buffer space allocated to best-effort traffic (lossy buffer partition): 95%
Egress shared buffer	Percentage of available egress buffer space allocated to the egress shared buffer: 100% Percentage of egress buffer space allocated to lossless queues (lossless buffer partition): 5% Percentage of egress buffer space allocated to best-effort queues (lossy buffer partition): 75% Percentage of egress buffer space allocated to multicast traffic (multicast buffer partition): 20%

Copyright © 2018, Juniper Networks, Inc.

Configuration

CLI Quick Configuration

To quickly configure the recommended shared buffer settings for networks that carry mostly best-effort unicast traffic, copy the following commands, paste them in a text file, remove line breaks, change variables and details to match your network configuration, and then copy and paste the commands into the CLI at the **[edit class-of-service shared-buffer]** hierarchy level:

```
[edit class-of-service shared-buffer]
set ingress percent 100
set ingress buffer-partition lossless percent 5
set ingress buffer-partition lossless-headroom percent 0
set ingress buffer-partition lossy percent 95
set egress percent 100
set egress buffer-partition lossless percent 5
set egress buffer-partition lossy percent 75
set egress buffer-partition multicast percent 20
```

Configuring the Global Shared Buffer Pool for Networks with Mostly Best-Effort Unicast Traffic

Step-by-Step Procedure

To configure the global ingress and egress shared buffer allocations and partitions for a network that carries mostly best-effort unicast traffic:

1. Configure the percentage of available (nonreserved) buffers used for the ingress global shared buffer pool:

   ```
   [edit class-of-service shared-buffer]
   user@switch# set ingress percent 100
   ```

2. Configure the global ingress buffer partitions for lossless, lossless-headroom, and lossy traffic:

   ```
   [edit class-of-service shared-buffer]
   user@switch# set ingress buffer-partition lossless percent 5
   user@switch# set ingress buffer-partition lossless-headroom percent 0
   user@switch# set ingress buffer-partition lossy percent 95
   ```

3. Configure the percentage of available (nonreserved) buffers used for the egress global shared buffer pool:

   ```
   [edit class-of-service shared-buffer]
   user@switch# set egress percent 100
   ```

4. Configure the global egress buffer partitions for lossless, lossy, and multicast queues:

   ```
   [edit class-of-service shared-buffer]
   user@switch# set egress buffer-partition lossless percent 5
   user@switch# set egress buffer-partition lossy percent 75
   user@switch# set egress buffer-partition multicast percent 20
   ```

Copyright © 2018, Juniper Networks, Inc.

Results

Display the results of the configuration:

```
root@dcbg-tp-pa-02> show configuration class-of-service shared-buffer
ingress {
    percent 100;
    buffer-partition lossless {
        percent 5;
    }
    buffer-partition lossy {
        percent 95;
    }
    buffer-partition lossless-headroom {
        percent 0;
    }
}
egress {
    percent 100;
    buffer-partition lossless {
        percent 5;
    }
    buffer-partition lossy {
        percent 75;
    }
    buffer-partition multicast {
        percent 20;
    }
}
```

Verification

Verify that you correctly configured the shared buffer.

Verifying the Shared Buffer Configuration

Purpose Verify that the ingress and egress global shared buffer pools are correctly configured and partitioned among the shared buffer types.

Action List the global shared buffer configuration using the operational mode command **show class-of-service shared-buffer**:

user@switch> **show class-of-service shared-buffer**

```
root@dcbg-tp-pa-02> show class-of-service shared-buffer
Ingress:
  Total Buffer     :  9360.00 KB
  Dedicated Buffer :  2158.00 KB
  Shared Buffer    :  7202.00 KB
    Lossless          :  360.10 KB
    Lossless Headroom :  0.00 KB
    Lossy             :  6841.90 KB

  Lossless Headroom Utilization:
```

 Copyright © 2018, Juniper Networks, Inc.

```
  Node Device         Total          Used                  Free
  0                   0.00 KB        0.00 KB               0.00 KB

Egress:
  Total Buffer     :  9360.00 KB
  Dedicated Buffer :  2704.00 KB
  Shared Buffer    :  6656.00 KB
    Lossless          :  332.80 KB
    Multicast         :  1331.20 KB
    Lossy             :  4992.00 KB
```

Meaning The **show class-of-service shared-buffer** operational command shows all of the ingress and egress global shared buffer settings, including the buffer partitioning.

For the ingress shared buffers, the command output shows:

- The total switch buffer pool is 9360 KB (9 MB).
- The dedicated buffer pool is 2158 KB. This is the size of the global ingress dedicated buffer pool when you configure the ingress shared buffer pool as 100 percent of the available (user-configurable) buffer space. This is the minimum size of the reserved, ingress dedicated ingress buffer pool (not user-configurable). If you configure the shared buffer as less than 100 percent of the available buffer pool, the remaining buffer space is added to the dedicated buffer pool.
- With the ingress shared buffer pool configured as 100 percent of the available buffers, the total size of the ingress shared buffer pool is 7202 KB.
- The ingress shared buffer pool is partitioned to allocate:
  - 360.10 KB to lossless traffic
  - No space to lossless headroom traffic
  - 6841.90 KB to lossy unicast traffic
- The Lossless Headroom Utilization field shows how much of the buffer space reserved for paused traffic is used. Because the lossless headroom buffer partition is set to 0 (zero) percent, the total amount of lossless headroom buffer space is 0 KB; therefore the amount of used and free lossless headroom buffer space is also 0 KB.

For the egress shared buffers, the command output shows:

- The total switch buffer pool is 9360 KB (9 MB).
- The dedicated buffer pool is 2704 KB. This is the size of the global egress dedicated buffer pool when you configure the egress shared buffer pool as 100 percent of the available (user-configurable) buffer space. This is the minimum size of the reserved, egress dedicated buffer pool (not user-configurable). If you configure the shared buffer as less than 100 percent of the available buffer pool, the remaining buffer space is added to the dedicated buffer pool.
- With the egress shared buffer pool configured as 100 percent of the available buffers, the total size of the egress shared buffer pool is 6656 KB. This is less than the ingress

shared buffer pool because the switch reserves more egress dedicated buffer space than ingress dedicated buffer space. (More dedicated buffer space means less shared buffer space, and more shared buffer space means less dedicated buffer space.)

- The egress shared buffer pool is partitioned to allocate:
  - 332.80 KB to lossless traffic
  - 1331.20 KB to multicast traffic
  - 4992 KB to lossy unicast traffic

NOTE: The output values are valid for QFX3500 and QFX3600 switches. QFX5100, EX4600, and OCX Series switches have larger buffers (12 MB instead of 9 MB), so the total buffer size and the sizes of each buffer partition are larger on those switches.

Related Documentation

- Example: Recommended Configuration of the Shared Buffer Pool for Networks with Mostly Best-Effort Traffic on Links with Ethernet PAUSE Enabled on page 598
- Example: Recommended Configuration of the Shared Buffer Pool for Networks with Mostly Multicast Traffic on page 605
- Example: Recommended Configuration of the Shared Buffer Pool for Networks with Mostly Lossless Traffic on page 611
- Configuring Global Ingress and Egress Shared Buffers on page 590
- Understanding CoS Buffer Configuration on page 568

Example: Recommended Configuration of the Shared Buffer Pool for Networks with Mostly Best-Effort Traffic on Links with Ethernet PAUSE Enabled

Although the switch reserves some buffer space to ensure a minimum memory allocation for ports and queues, you can configure how the system uses the rest of the buffer space to optimize the buffer allocation for your particular mix of network traffic.

This example shows you the recommended configuration of the global shared buffer pool to support a network that carries mostly best-effort (lossy) traffic on links with Ethernet PAUSE (IEEE 802.3X) enabled.

NOTE: OCX Series switches support symmetric Ethernet PAUSE flow control, but do not support asymmetric Ethernet PAUSE flow control.

The global shared buffer pool is memory space that all of the ports on the switch share dynamically as they need buffers. You can allocate global shared memory space to different types of buffers to better support different mixes of network traffic.

 Copyright © 2018, Juniper Networks, Inc.

CAUTION: **Changing the buffer configuration is a disruptive event. Traffic stops on *all* ports until buffer reprogramming is complete.**

Use the default shared buffer settings (for a network with a balanced mix of lossless, best effort, and multicast traffic) or one of the recommended shared buffer configurations for your mix of network traffic (mostly best-effort unicast traffic, mostly best-effort traffic on links enabled for Ethernet PAUSE, mostly multicast traffic, or mostly lossless traffic). Either the default configuration or one of the recommended configurations provides a buffer allocation that satisfies the needs of most networks.

After starting from the recommended configuration, you can fine-tune the shared buffer settings, but do so with caution to prevent traffic loss due to buffer misconfiguration.

- Requirements on page 599
- Overview on page 599
- Configuration on page 601
- Verification on page 603

Requirements

This example uses the following hardware and software components:

- One switch (this example was tested on a Juniper Networks QFX3500 Switch)
- Junos OS Release 12.3 or later for the QFX Series or Junos OS Release 14.1X53-D20 or later for the OCX Series

Overview

You can configure the percentage of available (user-configurable) buffer space allocated to the global shared buffers. Any space that you do not allocate to the global shared buffer pool is added to the dedicated buffer pool. The default configuration allocates 100 percent of the available buffer space to the global shared buffers.

You can partition the ingress and egress shared buffer pools to allocate more buffers to the types of traffic your network predominantly carries, and fewer buffers to other traffic. From the buffer space allocated to the ingress shared buffer pool, you can allocate space to:

- Lossless buffers—Percentage of shared buffer pool for all lossless ingress traffic. The minimum value for the lossless buffers is 5 percent.
- Lossless headroom buffers—Percentage of shared buffer pool for packets received while a pause is asserted. If Ethernet PAUSE is configured on a port or if priority-based flow control (PFC) is configured on priorities on a port, when the port sends a pause message to the connected peer, the port uses the headroom buffers to store the packets that arrive between the time the port sends the pause message and the time the last packet arrives after the peer pauses traffic. The minimum value for the lossless

Copyright © 2018, Juniper Networks, Inc.

headroom buffers is 0 (zero) percent. (Lossless headroom buffers are the only buffers that can have a minimum value of less than 5 percent.)

NOTE: OCX Series switches do not support PFC.

- Lossy buffers—Percentage of shared buffer pool for all best-effort ingress traffic (best-effort unicast, multidestination, and strict-high priority traffic). The minimum value for the lossy buffers is 5 percent.

The combined percentage values of the ingress lossless, lossless headroom, and lossy buffer partitions must total exactly 100 percent. If the buffer percentages total more than 100 percent or less than 100 percent, the switch returns a commit error. All ingress buffer partitions must be explicitly configured, even when the lossless headroom buffer partition has a value of 0 (zero) percent.

From the buffer space allocated to the egress shared buffer pool, you can allocate space to:

- Lossless buffers—Percentage of shared buffer pool for all lossless egress queues. The minimum value for the lossless buffers is 5 percent.
- Lossy buffers—Percentage of shared buffer pool for all best-effort egress queues (best-effort unicast and strict-high priority queues). The minimum value for the lossy buffers is 5 percent.
- Multicast buffers—Percentage of shared buffer pool for all multidestination (multicast, broadcast, and destination lookup fail) egress queues. The minimum value for the multicast buffers is 5 percent.

The combined percentage values of the egress lossless, lossy, and multicast buffer partitions must total exactly 100 percent. If the buffer percentages total more than 100 percent or less than 100 percent, the switch returns a commit error. All egress buffer partitions must be explicitly configured and must have a value of at least 5 percent.

To configure the shared buffers to support a network that carries mostly best-effort traffic on links enabled for Ethernet PAUSE, more buffer space needs to be allocated to ingress dedicated port buffers, and less buffer space should be allocated to ingress shared buffers. Also, more buffer space needs to be allocated to lossless-headroom buffers, and less space to ingress lossy buffers. This example shows you how to configure the global shared buffer pool allocation that we recommend to support a network that carries mostly best-effort traffic on links enabled for Ethernet PAUSE.

Topology

Table 135 on page 600 shows the configuration components for this example.

Table 135: Components of the Recommended Shared Buffer Configuration for Best-Effort Network Topologies with Links Enabled for Ethernet PAUSE

Component	Settings
Hardware	QFX3500 switch

Copyright © 2018, Juniper Networks, Inc.

Table 135: Components of the Recommended Shared Buffer Configuration for Best-Effort Network Topologies with Links Enabled for Ethernet PAUSE (continued)

Component	Settings
Ingress shared buffer	Percentage of available ingress buffer space allocated to the ingress shared buffer: 70% Percentage of ingress buffer space allocated to lossless traffic (lossless buffer partition): 5% Percentage of ingress buffer space allocated to lossless headroom traffic (lossless-headroom buffer partition): 80% Percentage of ingress buffer space allocated to best-effort traffic (lossy buffer partition): 15%
Egress shared buffer	Percentage of available egress buffer space allocated to the egress shared buffer: 100% Percentage of egress buffer space allocated to lossless queues (lossless buffer partition): 5% Percentage of egress buffer space allocated to best-effort queues (lossy buffer partition): 75% Percentage of egress buffer space allocated to multicast traffic (multicast buffer partition): 20%

Configuration

CLI Quick Configuration

To quickly configure the recommended shared buffer settings for networks that carry mostly best-effort unicast traffic, copy the following commands, paste them in a text file, remove line breaks, change variables and details to match your network configuration, and then copy and paste the commands into the CLI at the **[edit class-of-service shared-buffer]** hierarchy level:

```
[edit class-of-service shared-buffer]
set ingress percent 70
set ingress buffer-partition lossless percent 5
set ingress buffer-partition lossless-headroom percent 80
set ingress buffer-partition lossy percent 15
set egress percent 100
set egress buffer-partition lossless percent 5
set egress buffer-partition lossy percent 75
set egress buffer-partition multicast percent 20
```

Configuring the Global Shared Buffer Pool for Networks with Mostly Best-Effort Traffic on Links Enabled for Ethernet PAUSE

Step-by-Step Procedure

To configure the global ingress and egress shared buffer allocations and partitions:

1. Configure the percentage of available (nonreserved) buffers used for the ingress global shared buffer pool:

```
[edit class-of-service shared-buffer]
user@switch# set ingress percent 70
```

2. Configure the global ingress buffer partitions for lossless, lossless-headroom, and lossy traffic:

```
[edit class-of-service shared-buffer]
user@switch# set ingress buffer-partition lossless percent 5
user@switch# set ingress buffer-partition lossless-headroom percent 80
user@switch# set ingress buffer-partition lossy percent 15
```

3. Configure the percentage of available (nonreserved) buffers used for the egress global shared buffer pool:

```
[edit class-of-service shared-buffer]
user@switch# set egress percent 100
```

4. Configure the global egress buffer partitions for lossless, lossy, and multicast queues:

```
[edit class-of-service shared-buffer]
user@switch# set egress buffer-partition lossless percent 5
user@switch# set egress buffer-partition lossy percent 75
user@switch# set egress buffer-partition multicast percent 20
```

Results

Display the results of the configuration:

```
root@dcbg-tp-pa-02> show configuration class-of-service shared-buffer
ingress {
    percent 70;
    buffer-partition lossless {
        percent 5;
    }
    buffer-partition lossy {
        percent 15;
    }
    buffer-partition lossless-headroom {
        percent 80;
    }
}
egress {
```


Copyright © 2018, Juniper Networks, Inc.

```
    percent 100;
    buffer-partition lossless {
        percent 5;
    }
    buffer-partition lossy {
        percent 75;
    }
    buffer-partition multicast {
        percent 20;
    }
}
```

Verification

Verify that you correctly configured the shared buffer.

Verifying the Shared Buffer Configuration

Purpose Verify that the ingress and egress global shared buffer pools are correctly configured and partitioned among the shared buffer types.

Action List the global shared buffer configuration using the operational mode command **show class-of-service shared-buffer**:

```
user@switch> show class-of-service shared-buffer
```

```
root@dcbg-tp-pa-02> show class-of-service shared-buffer
Ingress:
  Total Buffer     :  9360.00 KB
  Dedicated Buffer :  4318.60 KB
  Shared Buffer    :  5041.40 KB
    Lossless          :  252.07 KB
    Lossless Headroom :  4033.12 KB
    Lossy             :  756.21 KB

Egress:
  Total Buffer     :  9360.00 KB
  Dedicated Buffer :  2704.00 KB
  Shared Buffer    :  6656.00 KB
    Lossless          :  332.80 KB
    Multicast         :  1331.20 KB
    Lossy             :  4992.00 KB
```

Meaning The **show class-of-service shared-buffer** operational command shows all of the ingress and egress global shared buffer settings, including the buffer partitioning.

For the ingress shared buffers, the command output shows:

- The total switch buffer pool is 9360 KB (9 MB).
- The dedicated buffer pool is 4318.6 KB. This is the size of the global ingress dedicated buffer pool when you configure the ingress shared buffer pool as 70 percent of the available (user-configurable) buffer space.

- With the ingress shared buffer pool configured as 70 percent of the available buffers, the total size of the ingress shared buffer pool is 5041.4 KB.
- The ingress shared buffer pool is partitioned to allocate:
  - 252.07 KB to lossless traffic
  - 4033.12 KB to lossless headroom traffic
  - 756.21 KB to lossy unicast traffic

For the egress shared buffers, the command output shows:

- The total switch buffer pool is 9360 KB (9 MB).
- The dedicated buffer pool is 2704 KB. This is the size of the global egress dedicated buffer pool when you configure the egress shared buffer pool as 100 percent of the available (user-configurable) buffer space. This is the minimum size of the reserved, egress dedicated buffer pool (not user-configurable). If you configure the shared buffer as less than 100 percent of the available buffer pool, the remaining buffer space is added to the dedicated buffer pool.
- With the egress shared buffer pool configured as 100 percent of the available buffers, the total size of the egress shared buffer pool is 6656 KB. This is less than the ingress shared buffer pool because the switch reserves more egress dedicated buffer space than ingress dedicated buffer space. (More dedicated buffer space means less shared buffer space, and more shared buffer space means less dedicated buffer space.)
- The egress shared buffer pool is partitioned to allocate:
  - 332.80 KB to lossless traffic
  - 1331.20 KB to multicast traffic
  - 4992 KB to lossy unicast traffic

NOTE: **The output values are valid for QFX3500 and QFX3600 switches. QFX5100, EX4600, and OCX Series switches have larger buffers (12 MB instead of 9 MB), so the total buffer size and the sizes of each buffer partition are larger on those switches.**

Related Documentation

- Example: Recommended Configuration of the Shared Buffer Pool for Networks with Mostly Best-Effort Unicast Traffic on page 592
- Example: Recommended Configuration of the Shared Buffer Pool for Networks with Mostly Multicast Traffic on page 605
- Example: Recommended Configuration of the Shared Buffer Pool for Networks with Mostly Lossless Traffic on page 611
- Configuring Global Ingress and Egress Shared Buffers on page 590
- Understanding CoS Buffer Configuration on page 568

Copyright © 2018, Juniper Networks, Inc.

Example: Recommended Configuration of the Shared Buffer Pool for Networks with Mostly Multicast Traffic

Although the switch reserves some buffer space to ensure a minimum memory allocation for ports and queues, you can configure how the system uses the rest of the buffer space to optimize the buffer allocation for your particular mix of network traffic.

This example shows you the recommended configuration of the global shared buffer pool to support a network that carries mostly multicast traffic. The global shared buffer pool is memory space that all of the ports on the switch share dynamically as they need buffers. You can allocate global shared memory space to different types of buffers to better support different mixes of network traffic.

CAUTION: **Changing the buffer configuration is a disruptive event. Traffic stops on *all* ports until buffer reprogramming is complete.**

Use the default shared buffer settings (for a network with a balanced mix of lossless, best effort, and multicast traffic) or one of the recommended shared buffer configurations for your mix of network traffic (mostly best-effort unicast traffic, mostly best-effort traffic on links enabled for Ethernet PAUSE, mostly multicast traffic, or mostly lossless traffic). Either the default configuration or one of the recommended configurations provides a buffer allocation that satisfies the needs of most networks.

After starting from the recommended configuration, you can fine-tune the shared buffer settings, but do so with caution to prevent traffic loss due to buffer misconfiguration.

- Requirements on page 605
- Overview on page 605
- Configuration on page 607
- Verification on page 609

Requirements

This example uses the following hardware and software components:

- One switch (this example was tested on a Juniper Networks QFX3500 Switch)
- Junos OS Release 12.3 or later for the QFX Series or Junos OS Release 14.1X53-D20 or later for the OCX Series

Overview

You can configure the percentage of available (user-configurable) buffer space allocated to the global shared buffers. Any space that you do not allocate to the global shared buffer pool is added to the dedicated buffer pool. The default configuration allocates 100 percent of the available buffer space to the global shared buffers.

You can partition the ingress and egress shared buffer pools to allocate more buffers to the types of traffic your network predominantly carries, and fewer buffers to other traffic. From the buffer space allocated to the ingress shared buffer pool, you can allocate space to:

- Lossless buffers—Percentage of shared buffer pool for all lossless ingress traffic. The minimum value for the lossless buffers is 5 percent.
- Lossless headroom buffers—Percentage of shared buffer pool for packets received while a pause is asserted. If Ethernet PAUSE is configured on a port or if priority-based flow control (PFC) is configured on priorities on a port, when the port sends a pause message to the connected peer, the port uses the headroom buffers to store the packets that arrive between the time the port sends the pause message and the time the last packet arrives after the peer pauses traffic. The minimum value for the lossless headroom buffers is 0 (zero) percent. (Lossless headroom buffers are the only buffers that can have a minimum value of less than 5 percent.)
- Lossy buffers—Percentage of shared buffer pool for all best-effort ingress traffic (best-effort unicast, multidestination, and strict-high priority traffic). The minimum value for the lossy buffers is 5 percent.

The combined percentage values of the ingress lossless, lossless headroom, and lossy buffer partitions must total exactly 100 percent. If the buffer percentages total more than 100 percent or less than 100 percent, the switch returns a commit error. All ingress buffer partitions must be explicitly configured, even when the lossless headroom buffer partition has a value of 0 (zero) percent.

From the buffer space allocated to the egress shared buffer pool, you can allocate space to:

- Lossless buffers—Percentage of shared buffer pool for all lossless egress queues. The minimum value for the lossless buffers is 5 percent.
- Lossy buffers—Percentage of shared buffer pool for all best-effort egress queues (best-effort unicast, and strict-high priority queues). The minimum value for the lossy buffers is 5 percent.
- Multicast buffers—Percentage of shared buffer pool for all multidestination (multicast, broadcast, and destination lookup fail) egress queues. The minimum value for the multicast buffers is 5 percent.

The combined percentage values of the egress lossless, lossy, and multicast buffer partitions must total exactly 100 percent. If the buffer percentages total more than 100 percent or less than 100 percent, the switch returns a commit error. All egress buffer partitions must be explicitly configured and must have a value of at least 5 percent.

To configure the shared buffers to support a network that carries mostly multicast traffic, more buffer space needs to be allocated to lossy buffers, less buffer space should be allocated to lossless buffers, and more space needs to be allocated to egress multicast buffers. This example shows you how to configure the global shared buffer pool allocation that we recommend to support a network that carries mostly multicast traffic.

 Copyright © 2018, Juniper Networks, Inc.

Topology

Table 136 on page 607 shows the configuration components for this example.

Table 136: Components of the Recommended Shared Buffer Configuration for Multicast Network Topologies

Component	Settings
Hardware	QFX3500 switch
Ingress shared buffer	Percentage of available ingress buffer space allocated to the ingress shared buffer: 100% Percentage of ingress buffer space allocated to lossless traffic (lossless buffer partition): 5% Percentage of ingress buffer space allocated to lossless headroom traffic (lossless-headroom buffer partition): 0% Percentage of ingress buffer space allocated to best-effort traffic (lossy buffer partition): 95%
Egress shared buffer	Percentage of available egress buffer space allocated to the egress shared buffer: 100% Percentage of egress buffer space allocated to lossless queues (lossless buffer partition): 5% Percentage of egress buffer space allocated to best-effort queues (lossy buffer partition): 20% Percentage of egress buffer space allocated to multicast traffic (multicast buffer partition): 75%

Configuration

CLI Quick Configuration

To quickly configure the recommended shared buffer settings for networks that carry mostly multicast traffic, copy the following commands, paste them in a text file, remove line breaks, change variables and details to match your network configuration, and then copy and paste the commands into the CLI at the **[edit class-of-service shared-buffer]** hierarchy level:

```
[edit class-of-service shared-buffer]
set ingress percent 100
set ingress buffer-partition lossless percent 5
set ingress buffer-partition lossless-headroom percent 0
set ingress buffer-partition lossy percent 95
set egress percent 100
set egress buffer-partition lossless percent 5
set egress buffer-partition lossy percent 20
set egress buffer-partition multicast percent 75
```

Configuring the Global Shared Buffer Pool for Networks with Mostly Multicast Traffic

Step-by-Step Procedure

To configure the global ingress and egress shared buffer allocations and partitions for a network that carries mostly multicast traffic:

1. Configure the percentage of available (nonreserved) buffers used for the ingress global shared buffer pool:

```
[edit class-of-service shared-buffer]
user@switch# set ingress percent 100
```

2. Configure the global ingress buffer partitions for lossless, lossless-headroom, and lossy traffic:

```
[edit class-of-service shared-buffer]
user@switch# set ingress buffer-partition lossless percent 5
user@switch# set ingress buffer-partition lossless-headroom percent 0
user@switch# set ingress buffer-partition lossy percent 95
```

3. Configure the percentage of available (nonreserved) buffers used for the egress global shared buffer pool:

```
[edit class-of-service shared-buffer]
user@switch# set egress percent 100
```

4. Configure the global egress buffer partitions for lossless, lossy, and multicast queues:

```
[edit class-of-service shared-buffer]
user@switch# set egress buffer-partition lossless percent 5
user@switch# set egress buffer-partition lossy percent 20
user@switch# set egress buffer-partition multicast percent 75
```

Results

Display the results of the configuration:

```
root@dcbg-tp-pa-02> show configuration class-of-service shared-buffer
ingress {
    percent 100;
    buffer-partition lossless {
        percent 5;
    }
    buffer-partition lossy {
        percent 95;
    }
    buffer-partition lossless-headroom {
        percent 0;
    }
}
```


Copyright © 2018, Juniper Networks, Inc.

```
egress {
    percent 100;
    buffer-partition lossless {
        percent 5;
    }
    buffer-partition lossy {
        percent 20;
    }
    buffer-partition multicast {
        percent 75;
    }
}
```

Verification

Verify that you correctly configured the shared buffer.

Verifying the Shared Buffer Configuration

Purpose Verify that you correctly configured the ingress and egress global shared buffer pools and that you correctly partitioned the buffer among the shared buffer types.

Action List the global shared buffer configuration using the operational mode command **show class-of-service shared-buffer**:

user@switch> **show class-of-service shared-buffer**

```
root@dcbg-tp-pa-02> show class-of-service shared-buffer
Ingress:
  Total Buffer     :  9360.00 KB
  Dedicated Buffer :  2158.00 KB
  Shared Buffer    :  7202.00 KB
    Lossless          :  360.10 KB
    Lossless Headroom :  0.00 KB
    Lossy             :  6841.90 KB

  Lossless Headroom Utilization:
  Node Device         Total          Used                  Free
  0                   0.00 KB        0.00 KB               0.00 KB

Egress:
  Total Buffer     :  9360.00 KB
  Dedicated Buffer :  2704.00 KB
  Shared Buffer    :  6656.00 KB
    Lossless          :  332.80 KB
    Multicast         :  4992.00 KB
    Lossy             :  1331.20 KB
```

Meaning The **show class-of-service shared-buffer** operational command shows all of the ingress and egress global shared buffer settings, including the buffer partitioning.

For the ingress shared buffers, the command output shows:

- The total switch buffer pool is 9360 KB (9 MB).
- The dedicated buffer pool is 2158 KB. This is the size of the global ingress dedicated buffer pool when you configure the ingress shared buffer pool as 100 percent of the available (user-configurable) buffer space. This is the minimum size of the reserved, ingress dedicated ingress buffer pool (not user-configurable). If you configure the shared buffer as less than 100 percent of the available buffer pool, the remaining buffer space is added to the dedicated buffer pool.
- With the ingress shared buffer pool configured as 100 percent of the available buffers, the total size of the ingress shared buffer pool is 7202 KB.
- The ingress shared buffer pool is partitioned to allocate:
  - 360.10 KB to lossless traffic
  - No space to lossless headroom traffic
  - 6841.90 KB to lossy unicast traffic
- The Lossless Headroom Utilization field shows how much of the buffer space reserved for paused traffic is used. Because the lossless headroom buffer partition is set to 0 (zero) percent, the total amount of lossless headroom buffer space is 0 KB; therefore the amount of used and free lossless headroom buffer space is also 0 KB.

For the egress shared buffers, the command output shows:

- The total switch buffer pool is 9360 KB (9 MB).
- The dedicated buffer pool is 2704 KB. This is the size of the global egress dedicated buffer pool when you configure the egress shared buffer pool as 100 percent of the available (user-configurable) buffer space. This is the minimum size of the reserved, egress dedicated buffer pool (not user-configurable). If you configure the shared buffer as less than 100 percent of the available buffer pool, the remaining buffer space is added to the dedicated buffer pool.
- With the egress shared buffer pool configured as 100 percent of the available buffers, the total size of the egress shared buffer pool is 6656 KB. This is less than the ingress shared buffer pool because the switch reserves more egress dedicated buffer space than ingress dedicated buffer space. (More dedicated buffer space means less shared buffer space, and more shared buffer space means less dedicated buffer space.)
- The egress shared buffer pool is partitioned to allocate:
  - 332.80 KB to lossless traffic
  - 4992 KB to multicast traffic
  - 1331.20 KB to lossy unicast traffic

NOTE: **The output values are valid for QFX3500 and QFX3600 switches. QFX5100, EX4600, and OCX Series switches have larger buffers (12 MB instead of 9 MB), so the total buffer size and the sizes of each buffer partition are larger on those switches.**

 Copyright © 2018, Juniper Networks, Inc.

Related Documentation

- Example: Recommended Configuration of the Shared Buffer Pool for Networks with Mostly Best-Effort Unicast Traffic on page 592
- Example: Recommended Configuration of the Shared Buffer Pool for Networks with Mostly Best-Effort Traffic on Links with Ethernet PAUSE Enabled on page 598
- Example: Recommended Configuration of the Shared Buffer Pool for Networks with Mostly Lossless Traffic on page 611
- Configuring Global Ingress and Egress Shared Buffers on page 590
- Understanding CoS Buffer Configuration on page 568

Example: Recommended Configuration of the Shared Buffer Pool for Networks with Mostly Lossless Traffic

Although the switch reserves some buffer space to ensure a minimum memory allocation for ports and queues, you can configure how the system uses the rest of the buffer space to optimize the buffer allocation for your particular mix of network traffic.

This example shows you the recommended configuration of the global shared buffer pool to support a network that carries mostly lossless traffic. The global shared buffer pool is memory space that all of the ports on the switch share dynamically as they need buffers. You can allocate global shared memory space to different types of buffers to better support different mixes of network traffic.

CAUTION: **Changing the buffer configuration is a disruptive event. Traffic stops on *all* ports until buffer reprogramming is complete.**

Use the default shared buffer settings (for a network with a balanced mix of lossless, best effort, and multicast traffic) or one of the recommended shared buffer configurations for your mix of network traffic (mostly best-effort unicast traffic, mostly best-effort traffic on links enabled for Ethernet PAUSE, mostly multicast traffic, or mostly lossless traffic). Either the default configuration or one of the recommended configurations provides a buffer allocation that satisfies the needs of most networks.

NOTE: **When we discuss lossless buffers, we mean buffers that handle traffic on which you enable priority-based flow control (PFC) to ensure lossless transport. The lossless buffers are not used for best-effort traffic on a link on which you enable Ethernet PAUSE (IEEE 802.3x).**

After starting from the recommended configuration, you can fine-tune the shared buffer settings, but do so with caution to prevent traffic loss due to buffer misconfiguration.

- Requirements on page 612
- Overview on page 612

- Configuration on page 614
- Verification on page 615

Requirements

This example uses the following hardware and software components:

- Juniper Networks QFX3500 Switch
- Junos OS Release 12.3 or later for the QFX Series

Overview

You can configure the percentage of available (user-configurable) buffer space allocated to the global shared buffers. Any space that you do not allocate to the global shared buffer pool is added to the dedicated buffer pool. The default configuration allocates 100 percent of the available buffer space to the global shared buffers.

You can partition the ingress and egress shared buffer pools to allocate more buffers to the types of traffic your network predominantly carries, and fewer buffers to other traffic. From the buffer space allocated to the ingress shared buffer pool, you can allocate space to:

- Lossless buffers—Percentage of shared buffer pool for all lossless ingress traffic. The minimum value for the lossless buffers is 5 percent.
- Lossless headroom buffers—Percentage of shared buffer pool for packets received while a pause is asserted. If Ethernet PAUSE is configured on a port or if priority-based flow control (PFC) is configured on priorities on a port, when the port sends a pause message to the connected peer, the port uses the headroom buffers to store the packets that arrive between the time the port sends the pause message and the time the last packet arrives after the peer pauses traffic. The minimum value for the lossless headroom buffers is 0 (zero) percent. (Lossless headroom buffers are the only buffers that can have a minimum value of less than 5 percent.)
- Lossy buffers—Percentage of shared buffer pool for all best-effort ingress traffic (best-effort unicast, multidestination, and strict-high priority traffic). The minimum value for the lossy buffers is 5 percent.

The combined percentage values of the ingress lossless, lossless headroom, and lossy buffer partitions must total exactly 100 percent. If the buffer percentages total more than 100 percent or less than 100 percent, the switch returns a commit error. All ingress buffer partitions must be explicitly configured, even when the lossless headroom buffer partition has a value of 0 (zero) percent.

 Copyright © 2018, Juniper Networks, Inc.

NOTE: If you commit a buffer configuration for which the switch does not have sufficient resources, the switch might log an error instead of returning a commit error. In that case, a syslog message is displayed on the console. For example:

```
user@host# commit
configuration check succeeds

Message from syslogd@host at Jun 13 11:11:10  ...
host dc-pfe: Not enough Ingress Lossless headroom.(Already allocated
more). Dedicated : 14340 Lossy : 47100 Lossless 4239 Headroom 21195
Avail : 20781
commit complete
```

From the buffer space allocated to the egress shared buffer pool, you can allocate space to:

- Lossless buffers—Percentage of shared buffer pool for all lossless egress queues. The minimum value for the lossless buffers is 5 percent.
- Lossy buffers—Percentage of shared buffer pool for all best-effort egress queues (best-effort unicast, and strict-high priority queues). The minimum value for the lossy buffers is 5 percent.
- Multicast buffers—Percentage of shared buffer pool for all multidestination (multicast, broadcast, and destination lookup fail) egress queues. The minimum value for the multicast buffers is 5 percent.

The combined percentage values of the egress lossless, lossy, and multicast buffer partitions must total exactly 100 percent. If the buffer percentages total more than 100 percent or less than 100 percent, the switch returns a commit error. All egress buffer partitions must be explicitly configured and must have a value of at least 5 percent.

To configure the shared buffers to support a network that carries mostly lossless traffic, more buffer space needs to be allocated to lossless buffers, and less buffer space should be allocated to lossy buffers. This example shows you how to configure the global shared buffer pool allocation that we recommend to support a network that carries mostly lossless traffic.

Topology

Table 137 on page 613 shows the configuration components for this example.

Table 137: Components of the Recommended Shared Buffer Configuration for Lossless Network Topologies

Component	Settings
Hardware	QFX3500 switch

Table 137: Components of the Recommended Shared Buffer Configuration for Lossless Network Topologies (continued)

Component	Settings
Ingress shared buffer	Percentage of available ingress buffer space allocated to the ingress shared buffer: 100% Percentage of ingress buffer space allocated to lossless traffic (lossless buffer partition): 15% Percentage of ingress buffer space allocated to lossless headroom traffic (lossless headroom buffer partition): 80% Percentage of ingress buffer space allocated to best-effort traffic (lossy buffer partition): 5%
Egress shared buffer	Percentage of available egress buffer space allocated to the egress shared buffer: 100% Percentage of egress buffer space allocated to lossless queues (lossless buffer partition): 90% Percentage of egress buffer space allocated to best-effort queues (lossy buffer partition): 5% Percentage of egress buffer space allocated to multicast traffic (multicast buffer partition): 5%

Configuration

CLI Quick Configuration

To quickly configure the recommended shared buffer settings for networks that carry mostly lossless traffic, copy the following commands, paste them in a text file, remove line breaks, change variables and details to match your network configuration, and then copy and paste the commands into the CLI at the **[edit]** hierarchy level:

```
[edit class-of-service shared-buffer]
set ingress percent 100
set ingress buffer-partition lossless percent 15
set ingress buffer-partition lossless-headroom percent 80
set ingress buffer-partition lossy percent 5
set egress percent 100
set egress buffer-partition lossless percent 90
set egress buffer-partition lossy percent 5
set egress buffer-partition multicast percent 5
```

Configuring the Global Shared Buffer Pool for Networks with Mostly Lossless Traffic

Step-by-Step Procedure

To configure the global ingress and egress shared buffer allocations and partitions for a network that carries mostly lossless traffic:

1. Configure the percentage of available (nonreserved) buffers used for the ingress global shared buffer pool:

   ```
   [edit class-of-service shared-buffer]
   user@switch# set ingress percent 100
   ```

2. Configure the global ingress buffer partitions for lossless, lossless-headroom, and lossy traffic:

Copyright © 2018, Juniper Networks, Inc.

```
[edit class-of-service shared-buffer]
user@switch# set ingress buffer-partition lossless percent 15
user@switch# set ingress buffer-partition lossless-headroom percent 80
user@switch# set ingress buffer-partition lossy percent 5
```

3. Configure the percentage of available (nonreserved) buffers used for the egress global shared buffer pool:

```
[edit class-of-service shared-buffer]
user@switch# set egress percent 100
```

4. Configure the global egress buffer partitions for lossless, lossy, and multicast queues:

```
[edit class-of-service shared-buffer]
user@switch# set egress buffer-partition lossless percent 90
user@switch# set egress buffer-partition lossy percent 5
user@switch# set egress buffer-partition multicast percent 5
```

Results

Display the results of the configuration:

```
rroot@dcbg-tp-pa-02> show configuration class-of-service shared-buffer
ingress {
    percent 100;
    buffer-partition lossless {
        percent 15;
    }
    buffer-partition lossy {
        percent 5;
    }
    buffer-partition lossless-headroom {
        percent 80;
    }
}
egress {
    percent 100;
    buffer-partition lossless {
        percent 90;
    }
    buffer-partition lossy {
        percent 5;
    }
    buffer-partition multicast {
        percent 5;
    }
}
```

Verification

Verify that the shared buffer configuration has been created properly.

Verifying the Shared Buffer Configuration

Purpose Verify that the ingress and egress global shared buffer pools are correctly configured and partitioned among the shared buffer types.

Action List the global shared buffer configuration using the operational mode command **show class-of-service shared-buffer**:

user@switch> **show class-of-service shared-buffer**

```
root@dcbg-tp-pa-02> show class-of-service shared-buffer
Ingress:
  Total Buffer     :  9360.00 KB
  Dedicated Buffer :  2158.00 KB
  Shared Buffer    :  7202.00 KB
    Lossless          :  1080.30 KB
    Lossless Headroom :  5761.60 KB
    Lossy             :  360.10 KB

  Lossless Headroom Utilization:
  Node Device         Total          Used                  Free
  0                   5761.60 KB     0.00 KB               5761.60 KB

Egress:
  Total Buffer     :  9360.00 KB
  Dedicated Buffer :  2704.00 KB
  Shared Buffer    :  6656.00 KB
    Lossless          :  5990.40 KB
    Multicast         :  332.80 KB
    Lossy             :  332.80 KB
```

Meaning The **show class-of-service shared-buffer** operational command shows all of the ingress and egress global shared buffer settings, including the buffer partitioning.

For the ingress shared buffers, the command output shows:

- The total switch buffer pool is 9360 KB (9 MB).
- The dedicated buffer pool is 2158 KB. This is the size of the global ingress dedicated buffer pool when you configure the ingress shared buffer pool as 100 percent of the available (user-configurable) buffer space. This is the minimum size of the reserved, ingress dedicated ingress buffer pool (not user-configurable). If you configure the shared buffer as less than 100 percent of the available buffer pool, the remaining buffer space is added to the dedicated buffer pool.
- With the ingress shared buffer pool configured as 100 percent of the available buffers, the total size of the ingress shared buffer pool is 7202 KB.
- The ingress shared buffer pool is partitioned to allocate:
  - 1080 KB to lossless traffic
  - 5761.60 KB to lossless headroom traffic

 Copyright © 2018, Juniper Networks, Inc.

  - 360.10 KB to lossy unicast traffic

- The Lossless Headroom Utilization field shows how much of the buffer space reserved for paused traffic is used. Of the total available lossless headroom buffer space of 5761.60 KB, currently no buffer space is being used, so all 5761.60 KB of buffer space is free.

For the egress shared buffers, the command output shows:

- The total switch buffer pool is 9360 KB (9 MB).
- The dedicated buffer pool is 2704 KB. This is the size of the global egress dedicated buffer pool when you configure the egress shared buffer pool as 100 percent of the available (user-configurable) buffer space. This is the minimum size of the reserved, egress dedicated buffer pool (not user-configurable). If you configure the shared buffer as less than 100 percent of the available buffer pool, the remaining buffer space is added to the dedicated buffer pool.
- With the egress shared buffer pool configured as 100 percent of the available buffers, the total size of the egress shared buffer pool is 6656 KB. This is less than the ingress shared buffer pool because the switch reserves more egress dedicated buffer space than ingress dedicated buffer space. (More dedicated buffer space means less shared buffer space, and more shared buffer space means less dedicated buffer space.)
- The egress shared buffer pool is partitioned to allocate:
  - 5990.40 KB to lossless traffic
  - 332.80 KB to multicast traffic
  - 332.80 KB to lossy unicast traffic

NOTE: **The output values are valid for QFX3500 and QFX3600 switches. QFX5100 and EX4600 switches have larger buffers (12MB instead of 9MB), so the total buffer size and the sizes of each buffer partition are larger on QFX5100 and EX4600 switches.**

Related Documentation

- Example: Recommended Configuration of the Shared Buffer Pool for Networks with Mostly Best-Effort Unicast Traffic on page 592
- Example: Recommended Configuration of the Shared Buffer Pool for Networks with Mostly Best-Effort Traffic on Links with Ethernet PAUSE Enabled on page 598
- Example: Recommended Configuration of the Shared Buffer Pool for Networks with Mostly Multicast Traffic on page 605
- Configuring Global Ingress and Egress Shared Buffers on page 590
- Understanding CoS Buffer Configuration on page 568

Copyright © 2018, Juniper Networks, Inc.

CHAPTER 9

Learn About Technology

- Data Center Technology Overview Videos on page 619

Data Center Technology Overview Videos

Juniper Information Experience (iX) videos provide brief, high-level overviews of data center technologies and concepts. Each video runs approximately one-and-a-half to two minutes in length. This document contains SDN-related videos and links to conceptual documents that contain other data center technology videos:

- Learn About Video: Why Do We Need an IP Fabric? on page 619
- Learn About Video: What is the Best Control Plane Protocol to Use in a Data Center IP Fabric? on page 619
- Learn About Video: Why Use an Overlay Network in a Data Center? on page 619
- Conceptual Documents That Contain Technology Overview Videos on page 620

Learn About Video: Why Do We Need an IP Fabric?

The video *Why Do We Need an IP Fabric?* presents a brief overview of IP Fabric use cases.

Video: Why Do We Need an IP Fabric?

Learn About Video: What is the Best Control Plane Protocol to Use in a Data Center IP Fabric?

The video *What is the Best Control Plane Protocol to Use in a Data Center IP Fabric?* presents a brief overview of the arguments for using Border Gateway Protocol (BGP) as the data center IP fabric control plane protocol.

Video: What is the Best Control Plane Protocol to Use in a Data Center IP Fabric?

Learn About Video: Why Use an Overlay Network in a Data Center?

The video *Why Use an Overlay Network in a Data Center?* presents a brief overview of the advantages of data center overlay networks.

Copyright © 2018, Juniper Networks, Inc.

Video: Why Use an Overlay Network in a Data Center?

Conceptual Documents That Contain Technology Overview Videos

The following conceptual documents include brief video overviews of the technology:

- Understanding DCB Features and Requirements on page 376
- Understanding CoS Hierarchical Port Scheduling (ETS) on page 192
- Understanding CoS Flow Control (Ethernet PAUSE and PFC) on page 414
- Understanding DCBX on page 533
- *Understanding PFC Functionality Across Layer 3 Interfaces*
- *Virtual Chassis Fabric Overview*
- *Understanding In-Service Software Upgrade (ISSU)* and *In-Service Software Upgrade (ISSU) System Requirements* (same video)

Copyright © 2018, Juniper Networks, Inc.

PART 6

Configuration Statements and Operational Commands

- Configuration Statements (Basic Concepts) on page 623
- Configuration Statements (Classifiers and Rewrite Rules) on page 631
- Configuration Statements (Node Device Scheduling) on page 669
- Configuration Statements (Interconnect Device Fabric Scheduling) on page 701
- Configuration Statements (Data Center Bridging and Flow Control) on page 705
- Configuration Statements (Buffers) on page 747
- Operational Commands (Basic Concepts) on page 763
- Operational Commands (Classifiers and Rewrite Rules) on page 821
- Operational Commands (Node Device Scheduling) on page 885
- Operational Commands (Interconnect Device Scheduling) on page 981
- Operational Commands (Data Center Bridging and Lossless Transport) on page 985
- Operational Commands (Buffers) on page 1019

Copyright © 2018, Juniper Networks, Inc.

Copyright © 2018, Juniper Networks, Inc.

CHAPTER 10

Configuration Statements (Basic Concepts)

- class-of-service on page 624
- traceoptions (Class of Service) on page 628

class-of-service

Syntax

```
class-of-service {
  classifiers {
    (dscp | dscp-ipv6 | ieee-802.1 | exp) classifier-name {
      import (classifier-name | default);
      forwarding-class class-name {
        loss-priority level {
          code-points [ aliases ] [ bit-patterns ];
        }
      }
    }
  }
  code-point-aliases {
    (dscp| dscp-ipv6 | ieee-802.1) {
      alias-name bits;
    }
  }
  congestion-notification-profile profile-name {
    input {
      (dscp | ieee-802.1) {
        code-point [code-point-bits] {
          pfc {
            mru mru-value;
          }
        }
      }
      cable-length cable-length-value;
    }
    output {
      ieee-802.1 {
        code-point [code-point-bits] {
          flow-control-queue [queue | list-of-queues];
        }
      }
    }
  }
  drop-profiles {
    profile-name {
      interpolate {
        fill-level low-value fill-level high-value drop-probability 0 drop-probability high-value;
      }
    }
  }
  forwarding-class class-name {
    loss-priority level {
      code-points [ aliases ] [ bit-patterns ];
    }
  }
  forwarding-class class-name {
    scheduler scheduler-name;
  }
  forwarding-class-sets forwarding-class-set-name {
```


Copyright © 2018, Juniper Networks, Inc.

```
    class class-name;
  }
  forwarding-classes {
    class {
      class-name {
        pfc-priority pfc-priority;
        queue-num queue-number <no-loss>;
      }
    }
  }
  host-outbound-traffic{
    forwarding-class class-name;
    dscp-code-point code-point;
  }
  interfaces {
    interface-name  {
      congestion-notification-profile profile-name {
      }
      forwarding-class lossless-forwarding-class-name;
      forwarding-class-set forwarding-class-set-name {
        output-traffic-control-profile profile-name;
      }
      rewrite-value {
        input {
          ieee-802.1{
            code-point code-point-bits;
          }
        }
      }
      scheduler-map scheduler-map-name
      unit logical-unit-number {
        classifiers {
          (dscp | dscp-ipv6 | ieee-802.1 | exp) (classifier-name | default);
        }
        forwarding-class class-name;
        rewrite-rules {
          (dscp | dscp-ipv6 | ieee-802.1 | exp) (classifier-name | default);
        }
      }
    }
  }
  multi-destination {
    classifiers {
      (dscp | ieee-802.1) classifier-name;
    }
  }
  rewrite-rules {
    (dscp | dscp-ipv6 | ieee-802.1 | exp) classifier-name {
      import (rewrite-name | default);
      forwarding-class class-name {
        loss-priority priority code-point (alias | bits);
      }
    }
  }
  scheduler-map-forwarding-class-sets {
```

```
    fabric-scheduler-map-name {
      forwarding-class-set fabric-forwarding-class-set-name scheduler scheduler-name;
    }
  }
  scheduler-maps {
    map-name {
      forwarding-class class-name scheduler scheduler-name;
    }
  }
  schedulers {
    scheduler-name  {
      buffer-size (percent percentage | remainder);
      drop-profile-map loss-priority (low | medium-high | high) protocol protocol drop-profile
        drop-profile-name;
      excess-rate percent percentage;
      explicit-congestion-notification;
      priority priority;
      shaping-rate (rate | percent percentage);
      transmit-rate (percent percentage) <exact>;
    }
  }
  shared-buffer {
    egress {
      percent percent;
      buffer-partition (lossless | lossy | multicast) {
        percent percent
      }
    }
    ingress {
      percent percent;
      buffer-partition (lossless | lossless-headroom | lossy) {
        percent percent
      }
    }
  }
  system-defaults {
    classifiers exp classifier-name;
  }
  traffic-control-profiles profile-name {
    guaranteed-rate(rate| percent percentage);
    scheduler-map map-name;
    shaping-rate (rate| percent percentage);
  }
}
```

Hierarchy Level

```
[edit]
```


Copyright © 2018, Juniper Networks, Inc.

Release Information

Statement introduced in Junos OS Release 11.1 for the QFX Series.
Statement introduced in Junos OS Release 14.1X53-D20 for the OCX Series.

NOTE: Not all switches support all portions of the class of service hierarchy. For example, some switches use the same classifiers for unicast and multidestination traffic, and those switches do not support the **multi-destination** classifier hierarchy, and some switches do not support shared buffer configuration, and those switches do not support the **shared-buffer** hierarchy.

NOTE: OCX Series switches do not support MPLS exp classifiers and rewrite rules (including MPLS system defaults), and they do not support congestion notification profiles.

Description

Configure class-of-service parameters on the switch.

The remaining statements are explained separately. Search for a statement in CLI Explorer or click a linked statement in the Syntax section for details.

Default

If you do not configure any CoS features, the default CoS settings are used.

Required Privilege Level

interfaces—To view this statement in the configuration.
interface-control—To add this statement to the configuration.

Related Documentation

- Assigning CoS Components to Interfaces on page 23
- Overview of Junos OS CoS on page 4

traceoptions (Class of Service)

Syntax

```
traceoptions {
   file filename <size size> <files number>
   <world-readable | no-world-readable>;
   flag flag <flag-modifier>;
   no-remote-trace
}
```

Hierarchy Level

[edit class-of-service]

Release Information

Statement introduced in Junos OS Release 11.1 for the QFX Series.
Statement introduced in Junos OS Release 14.1X53-D20 for the OCX Series.

Description

Set class-of-service (CoS) tracing options.

NOTE: The **traceoptions** statement is not supported on the QFabric system.

Default

Traceoptions is disabled.

Options

file ***filename***—Name of the file to receive the tracing operation output. Enclose the name in quotation marks. Traceoption output files are located in the **/var/log/** directory.

files ***number***—(Optional) Maximum number of trace files. When a trace file named ***trace-file*** reaches its maximum size, it is renamed ***trace-file*.0**. The traceoption output continues in a second trace file named ***trace-file*.1**. When ***trace-file*.1** reaches its maximum size, output continues in a third file named ***trace-file*.2**, and so on. When the maximum number of trace files is reached, the oldest trace file is overwritten.

If you specify a maximum number of files, you must also specify a maximum file size with the size option.

Range: 2 through 1000 files

Default: 1 trace file

flag—Tracing operation to perform. To specify more than one tracing operation, include multiple **flag** statements:

- **all**—Trace all operations.
- **asynch**—Trace asynchronous configuration processing.
- **chassis-scheduler**—Trace chassis stream scheduler processing.
- **cos-adjustment**—Trace CoS rate adjustments.

Copyright © 2018, Juniper Networks, Inc.

- **dynamic**—Trace dynamic CoS functions.
- **hardware-database**—Trace the chassis hardware database related processing.
- **init**—Trace initialization events.
- **performance-monitor**—Trace performance monitor countors.
- **process**—Trace configuration processing.
- **restart**—Trace restart processing.
- **route-socket**—Trace route-socket events.
- **show**—Trace show command servicing.
- **snmp**—Trace SNMP-related processing.
- **util**—Trace utilities.

The following are the global tracing options:

- **all**—Perform all tracing operations
- **parse**—Trace parser processing.

no-remote-trace—(Optional) Disable remote tracing.

no-world-readable—(Optional) Prevent any user from reading the log file.

size ***size***—(Optional) Maximum size of each trace file, in kilobytes (KB), megabytes (MB), or gigabytes (GB). When a trace file named ***trace-file*** reaches its maximum size, it is renamed ***trace-file*.0.** Incoming tracefile data is logged in the now empty ***trace-file***. When ***trace-file*** again reaches its maximum size, ***trace-file*.0** is renamed ***trace-file*.1** and ***trace-file*** is renamed ***trace-file*.0**. This renaming scheme continues until the maximum number of trace files is reached. Then the oldest trace file is overwritten.

If you specify a maximum file size, you must also specify a maximum number of trace files with the **files** option.

Syntax: ***x*k** to specify KB, ***x*m** to specify MB, or ***x*g** to specify GB

Range: 10 KB through the maximum file size of 4 GB (maximum is lower if 4 GB is not supported on your system)

Default: 1 MB

world-readable—(Optional) Allow any user to read the log file.

Required Privilege Level

routing—To view this statement in the configuration.
routing-control—To add this statement to the configuration.

Copyright © 2018, Juniper Networks, Inc.

CHAPTER 11

Configuration Statements (Classifiers and Rewrite Rules)

- class (Forwarding Classes) on page 633
- class (Forwarding Class Sets) on page 634
- classifiers on page 635
- code-point (Fibre Channel Interfaces) on page 637
- code-point (Rewrite Rules) on page 638
- code-point-aliases on page 639
- code-points (CoS) on page 640
- dscp on page 641
- dscp-ipv6 on page 643
- dscp-code-point on page 644
- forwarding-class (Fibre Channel Interfaces) on page 645
- forwarding-class (Host Outbound Traffic) on page 646
- forwarding-class-sets on page 647
- forwarding-classes on page 648
- host-outbound-traffic on page 650
- ieee-802.1 on page 651
- ieee-802.1 (Fibre Channel Interfaces) on page 653
- import on page 654
- input (Fibre Channel Interfaces) on page 655
- interfaces (Class of Service) on page 656
- loss-priority (Classifiers) on page 658
- loss-priority (Rewrite Rules) on page 659
- multi-destination on page 660
- queue-num on page 661
- rewrite-rules on page 663

Copyright © 2018, Juniper Networks, Inc.

- rewrite-value (Fibre Channel Interfaces) on page 665
- unit on page 667

Copyright © 2018, Juniper Networks, Inc.

class (Forwarding Classes)

Syntax

```
class {
  class-name {
    pfc-priority pfc-priority;
    queue-num queue-number <no-loss>;
  }
}
```

Hierarchy Level

[edit class-of-service forwarding-classes]

Release Information

Statement introduced in Junos OS Release 11.1 for the QFX Series.
No-loss option introduced in Junos OS Release 12.3 for the QFX Series.
Statement introduced in Junos OS Release 14.1X53-D20 for the OCX Series.
PFC-priority statement introduced in Junos OS Release 17.4R1 for the QFX Series.

Description

Map one or more forwarding classes to a single queue. Also, when configuring DSCP-based PFC, map a forwarding class to a PFC priority value to use in pause frames when traffic on a DSCP value becomes congested (see *Configuring DSCP-based PFC for Layer 3 Untagged Traffic* for details).

You can map unicast forwarding classes to a unicast queue (0 through 7) and multidestination forwarding classes to a multicast queue (8 through 11). The queue to which you map a forwarding class determines if the forwarding class is a unicast or multicast forwarding class.

NOTE: On systems that do not use the ELS CLI, if you are using Junos OS Release 12.2, use the default forwarding-class-to-queue mapping for the lossless fcoe and no-loss forwarding classes. If you explicitly configure the lossless forwarding classes, the traffic mapped to those forwarding classes is treated as lossy (best effort) traffic and does *not* receive lossless treatment.

NOTE: On systems that do not use the ELS CLI, if you are using Junos OS Release 12.3 or later, the default configuration is the same as the default configuration for Junos OS Release 12.2, and the default behavior is the same (the fcoe and no-loss forwarding classes receive lossless treatment). However, if you explicitly configure lossless forwarding classes, you can configure up to six lossless forwarding classes by specifying the no-loss option. If you do not specify the no-loss option in an explicit forwarding class configuration, the forwarding class is lossy. For example, if you explicitly configure the fcoe forwarding class and you do not include the no-loss option, the fcoe forwarding class is lossy, not lossless.

Options *class-name* —Name of the forwarding class.

The remaining statements are explained separately. Click a linked statement in the Syntax section or search for a statement in CLI Explorer for details.

Required Privilege Level interfaces—To view this statement in the configuration.
interface-control—To add this statement to the configuration.

Related Documentation

- Example: Configuring Forwarding Classes on page 113
- Understanding CoS Forwarding Classes on page 104
- *Understanding CoS Forwarding Classes*

class (Forwarding Class Sets)

Syntax

```
class class-name;
```

Hierarchy Level

```
[edit class-of-service forwarding-class-sets forwarding-class-set-name]
```

Release Information Statement introduced in Junos OS Release 11.1 for the QFX Series.
Statement introduced in Junos OS Release 14.1X53-D20 for the OCX Series.

Description Group forwarding classes into sets of forwarding classes (priority groups). You can group some or all of the configured forwarding classes into up to three unicast forwarding class sets and one multidestination forwarding class set.

Options *class-name* —Name of the forwarding class.

Required Privilege Level interfaces—To view this statement in the configuration.
interface-control—To add this statement to the configuration.

Related Documentation

- Example: Configuring CoS Hierarchical Port Scheduling (ETS) on page 198
- Example: Configuring Forwarding Class Sets on page 120
- Understanding CoS Forwarding Class Sets (Priority Groups) on page 118

 Copyright © 2018, Juniper Networks, Inc.

classifiers

List of Syntax

Syntax (BA Classifiers) on page 635
Syntax (Multidestination BA Classifiers) on page 635
Syntax (Interface Classifier Association: DSCP, DSCP IPv6, IEEE) on page 635
Syntax (Global EXP Interface Classifier Association with Interfaces) on page 635

Syntax (BA Classifiers)

```
classifiers {
  (dscp | dscp-ipv6 | ieee-802.1) classifier-name {
    import (classifier-name | default);
    forwarding-class class-name {
      loss-priority level {
        code-points [ aliases ] [ bit-patterns ];
      }
    }
  }
}
```

Syntax (Multidestination BA Classifiers)

```
classifiers {
  (dscp | ieee-802.1) classifier-name;
}
```

Syntax (Interface Classifier Association: DSCP, DSCP IPv6, IEEE)

```
classifiers {
  (dscp | dscp-ipv6 | ieee-802.1) (default | classifier-name);
}
```

Syntax (Global EXP Interface Classifier Association with Interfaces)

```
classifiers {
  exp classifier-name;
}
```

Hierarchy Level (BA Classifiers)

```
[edit class-of-service],
```

Hierarchy Level (Multidestination BA Classifiers)

```
[edit class-of-service multi-destination],
```

Hierarchy Level (Interface Classifier Association: DSCP, DSCP IPv6, IEEE)

```
[edit class-of-service interfaces interface-name unit logical-unit-number]
```

Hierarchy Level (Global EXP Classifier)

```
[edit class-of-service system-defaults]
```

Release Information

Statement introduced in Junos OS Release 11.1 for the QFX Series.
EXP statement introduced in Junos OS Release 12.3 for the QFX Series.
Statement introduced in Junos OS Release 14.1X53-D20 for the OCX Series.

Description

Define a unicast or multidestination CoS behavior aggregate (BA) classifier.

NOTE: **OCX Series switches do not support MPLS, so they do not support EXP classifier configuration.**

Options

The remaining statements are explained separately. See CLI Explorer.

Required Privilege Level

interfaces—To view this statement in the configuration.
interface-control—To add this statement to the configuration.

Related Documentation

- Defining CoS BA Classifiers (DSCP, DSCP IPv6, IEEE 802.1p) on page 69
- *Configuring a Global MPLS EXP Classifier*
- Example: Configuring Unicast Classifiers on page 72
- Example: Configuring Multidestination (Multicast, Broadcast, DLF) Classifiers on page 75
- Understanding CoS Classifiers on page 60
- *Understanding CoS Classifiers*
- *Understanding CoS MPLS EXP Classifiers and Rewrite Rules*

Copyright © 2018, Juniper Networks, Inc.

code-point (Fibre Channel Interfaces)

Syntax

```
code-point code-point-bits;
```

Hierarchy Level

[edit class-of-service interfaces *fibre-channel-interface-name* rewrite-value input ieee-802.1]

Description

Configure the IEEE 802.1p code point value assigned to all traffic received from the Fibre Channel (FC) network on the specified FC interface (NP_Port). When native FC traffic from the FC SAN arrives at the NP_Port interface, the NP_Port interface encapsulates it in Ethernet to create FCoE packets before forwarding the traffic onto the FCoE network. Instead of using the default value of priority 3 (code point 011) for the FCoE traffic, the interface rewrites the IEEE 802.1p code point to the value specified in the rewrite value code points.

After the code point value is rewritten, the interface forwards the traffic to the Ethernet (FCoE) network. This works in conjunction with configuring a fixed classifier on the FC interface. The fixed classifier maps all traffic from the FC network into one lossless forwarding class (the lossless forwarding class must be mapped to the code point specified in the rewrite value). Traffic mapped to the lossless forwarding class uses the IEEE 802.1p priority specified by the code point bits in the rewrite value.

FCoE traffic typically uses priority 3 (IEEE code point 011). The QFX Series default configuration uses IEEE 802.1p priority 3 for FCoE traffic. Rewriting the code point value enables you to change the IEEE 802.1p priority of the FCoE traffic if the Ethernet network uses a different priority than priority 3 (code point 011).

The system supports only one IEEE 802.1p code point value per FC interface. You cannot configure more than one IEEE 802.1p rewrite value per FC interface. In addition, you can specify only one rewrite value per local FCoE-FC gateway fabric; all interfaces in the local fabric must use the same rewrite value. Attempting to configure FC interfaces in the same local fabric with different rewrite values generates a commit error. You can specify different rewrite values for interfaces that belong to different local FCoE-FC gateway fabrics.

Options

code-point-bits—Value of the code-point bits, in decimal form.

Required Privilege Level

interfaces—To view this statement in the configuration.
interface-control—To add this statement to the configuration.

Related Documentation

- forwarding-class (Fibre Channel Interfaces) on page 645
- Example: Configuring IEEE 802.1p Priority Remapping on an FCoE-FC Gateway on page 522
- Understanding CoS IEEE 802.1p Priority Remapping on an FCoE-FC Gateway on page 519
- Understanding CoS Classifiers on page 60

code-point (Rewrite Rules)

Syntax

```
code-point [ alias ] [ bit-pattern ];
```

Hierarchy Level

```
[edit class-of-service rewrite-rules (dscp | ieee-802.1) forwarding-class class-name
  loss-priority level]
```

Release Information

Statement introduced in Junos OS Release 11.1 for the QFX Series.
Statement introduced in Junos OS Release 14.1X53-D20 for the OCX Series.

Description

Configure a code-point alias or bit set to apply to a forwarding class for a rewrite rule.

NOTE: OCX Series switches do not support MPLS, so they do not support EXP rewrite rules.

Options

alias—Name of the alias.

bit-pattern—Value of the code-point bits, in decimal form.

Required Privilege Level

interfaces—To view this statement in the configuration.
interface-control—To add this statement to the configuration.

Related Documentation

- Defining CoS Rewrite Rules on page 130
- Understanding CoS Classifiers on page 60
- *Understanding CoS Classifiers*

Copyright © 2018, Juniper Networks, Inc.

code-point-aliases

Syntax

```
code-point-aliases {
  (dscp| dscp-ipv6 | ieee-802.1 | exp) {
    alias-name bits;
  }
}
```

Hierarchy Level

[edit class-of-service]

Release Information

Statement introduced in Junos OS Release 11.1 for the QFX Series.
Statement introduced in Junos OS Release 14.1X53-D20 for the OCX Series.

Description

Define an alias for a CoS marker. You can use the alias instead of the bit pattern when you specify the code point during configuration.

NOTE: OCX Series switches do not support MPLS, so they do not support EXP code-point aliases.

Options

(dcsp | dscp-ipv6 | ieee-802.1 | exp)—Set the type of classifier for which you are creating an alias.

alias-name—Name of the code-point alias.

bits —Value of the code-point bits, in decimal form.

Required Privilege Level

interfaces—To view this statement in the configuration.
interface-control—To add this statement to the configuration.

Related Documentation

- Defining CoS Code-Point Aliases on page 103
- Understanding CoS Code-Point Aliases on page 100

code-points (CoS)

Syntax

```
code-points ([ aliases ] | [ bit-patterns ]);
```

Hierarchy Level

```
[edit class-of-service classifiers type classifier-name forwarding-class class-name loss-priority
  level ]
```

Release Information

Statement introduced before Junos OS Release 7.4.
Statement introduced in Junos OS Release 9.2 for SRX Series devices.
Statement introduced in Junos OS Release 11.1 for the QFX Series.
Statement introduced in Junos OS Release 12.1X44 for the SRX Series.
Statement introduced in Junos OS Release 14.1X53-D20 for the OCX Series.
Statement introduced in Junos OS Release 14.2 for PTX Series Packet Transport Routers.

Description

Specify one or more DSCP code-point aliases or bit sets to apply to a forwarding class..

NOTE: OCX Series switches do not support MPLS, and therefore, do not support EXP code points or code point aliases.

Options

aliases—Name of the DSCP alias.

bit-patterns—Value of the code-point bits, in six-bit binary form.

Required Privilege Level

interface—To view this statement in the configuration.
interface-control—To add this statement to the configuration.

Related Documentation

- *Understanding Interfaces*
- *Understanding How Behavior Aggregate Classifiers Prioritize Trusted Traffic*
- *Example: Configuring Behavior Aggregate Classifiers*
- *Example: Configuring BA Classifiers on Transparent Mode Security Devices*

Copyright © 2018, Juniper Networks, Inc.

dscp

List of Syntax

Syntax (Classifier) on page 641
Syntax (Code-Point Alias) on page 641
Syntax (Multidestination Classifier) on page 641
Syntax (Interface Classifier Association) on page 641
Syntax (Rewrite Rule) on page 641

Syntax (Classifier)

```
dscp classifier-name {
  import (classifier-name | default);
  forwarding-class class-name {
    loss-priority level {
      code-points [ aliases ] [ bit-patterns ];
    }
  }
}
```

Syntax (Code-Point Alias Configuration)

```
dscp alias-name bit-pattern;
```

Syntax (Multidestination Classifier Configuration)

```
dscp classifier-name;
```

Syntax (Interface Classifier Association Configuration)

```
dscp (classifier-name | default);
```

Syntax (Rewrite Rule Configuration)

```
dscp rewrite-name {
  import (rewrite-name | default);
  forwarding-class class-name {
    loss-priority level {
      code-point [ aliases ] [ bit-patterns ];
    }
  }
}
```

Hierarchy Level (Classifier)

```
[edit class-of-service classifiers],
```

Hierarchy Level (Code-Point Aliases)

```
[edit class-of-service code-point-aliases],
```

Hierarchy Level (Multidestination Classifier)

```
[edit class-of-service multi-destination classifiers],
```

Hierarchy Level (Interface Classifier Association)

[edit class-of-service interfaces *interface-name* unit *logical-unit-number* classifiers],
[edit class-of-service interfaces *interface-name* unit *logical-unit-number* rewrite-rules],

Hierarchy Level (Rewrite Rule)

[edit class-of-service rewrite-rules]

Release Information

Statement introduced in Junos OS Release 11.1 for the QFX Series.
Statement introduced in Junos OS Release 14.1X53-D20 for the OCX Series.

Description

Define the Differentiated Services code point (DSCP) mapping that is applied to the packets.

Options

classifier-name—Name of the classifier.

The remaining statements are explained separately. See CLI Explorer.

Required Privilege Level

interfaces—To view this statement in the configuration.
interface-control—To add this statement to the configuration.

Related Documentation

- Example: Configuring Unicast Classifiers on page 72
- *Example: Configuring Classifiers*
- Defining CoS Code-Point Aliases on page 103
- Defining CoS Rewrite Rules on page 130
- Assigning CoS Components to Interfaces on page 23
- Understanding CoS Classifiers on page 60
- *Understanding CoS Classifiers*
- Understanding CoS Rewrite Rules on page 127
- Understanding Applying CoS Classifiers and Rewrite Rules to Interfaces on page 87
- *Understanding Applying CoS Classifiers and Rewrite Rules to Interfaces*

Copyright © 2018, Juniper Networks, Inc.

dscp-ipv6

List of Syntax

Syntax (Classifier) on page 643
Syntax (Code-Point Alias) on page 643
Syntax (Interface Classifier Association) on page 643
Syntax (Rewrite Rule) on page 643

Syntax (Classifier)

```
dscp-ipv6 classifier-name {
  import (classifier-name | default);
  forwarding-class class-name {
    loss-priority level {
      code-points [ aliases ] [ bit-patterns ];
    }
  }
}
```

Syntax (Code-Point Alias)

```
dscp-ipv6 alias-name bit-pattern;
```

Syntax (Interface Classifier Association)

```
dscp-ipv6 (classifier-name | default);
```

Syntax (Rewrite Rule)

```
dscp-ipv6 rewrite-name {
  import (rewrite-name | default);
  forwarding-class class-name {
    loss-priority level {
      code-point [ aliases ] [ bit-patterns ];
    }
  }
}
```

Hierarchy (Classifier)

```
[edit class-of-service classifiers],
```

Hierarchy (Code-Point Alias)

```
[edit class-of-service code-point-aliases],
```

Hierarchy (Interface Classifier Association)

```
[edit class-of-service interfaces interface-name unit logical-unit-number classifiers],
[edit class-of-service interfaces interface-name unit logical-unit-number rewrite-rules],
```

Hierarchy (Rewrite Rule)

```
[edit class-of-service rewrite-rules]
```

Release Information

Statement introduced in Junos OS Release 12.2 for the QFX Series.
Statement introduced in Junos OS Release 14.1X53-D20 for the OCX Series

Description Define the Differentiated Services code point (DSCP) IPv6 mapping that is applied to the packets.

NOTE: On switches that use different classifiers for unicast and multidestination (multicast, broadcast, and destination lookup fail) traffic, there is no DSCP IPv6 classifier for multidestination (multicast, broadcast, and destination lookup fail) traffic. Multidestination IPv6 traffic uses the multidestination DSCP classifier.

Options The remaining statements are explained separately. See CLI Explorer.

Required Privilege Level interfaces—To view this statement in the configuration.
interface-control—To add this statement to the configuration.

Related Documentation
- Defining CoS Code-Point Aliases on page 103
- Understanding Applying CoS Classifiers and Rewrite Rules to Interfaces on page 87
- *Understanding Applying CoS Classifiers and Rewrite Rules to Interfaces*

dscp-code-point

Syntax

```
dscp-code-point code-point;
```

Hierarchy Level

```
[edit class-of-service host-outbound-traffic]
```

Release Information Statement introduced in Junos OS Release 11.3 for the QFX Series.
Statement introduced in Junos OS Release 14.1X53-D20 for the OCX Series.

Description Set the value of the DSCP code point in the type of service (ToS) field of the packet generated by the Routing Engine (host).

Options **code-point**—Six-bit DSCP code point value.

Required Privilege Level interface—To view this statement in the configuration.
interface-control—To add this statement to the configuration.

Related Documentation
- Changing the Host Outbound Traffic Default Queue Mapping on page 126
- Understanding Host Routing Engine Outbound Traffic Queues and Defaults on page 124

Copyright © 2018, Juniper Networks, Inc.

forwarding-class (Fibre Channel Interfaces)

Syntax

forwarding-class *lossless-forwarding-class-name*;

Hierarchy Level

[edit class-of-service interfaces *fibre-channel-interface-name*]

Release Information

Statement introduced in Junos OS Release 12.3 for the QFX Series.

Description

Configure a Layer 3 fixed classifier on a Fibre Channel (FC) interface. The fixed classifier places all traffic received from the FC network into the specified forwarding class. The forwarding class must be lossless. (That is, the forwarding class must be either the default **fcoe** or **no-loss** forwarding class, or the forwarding class must be configured with the **no-loss** drop attribute.) If you attempt to specify a lossy forwarding class, the system returns a commit error.

FCoE networks typically use priority 3 (IEEE code point 011) for FCoE traffic. The QFX Series default configuration uses IEEE 802.1p priority 3 for FCoE traffic. If the IEEE 802.1p code point value that the Ethernet network uses for FCoE traffic is different than code point 3, you can rewrite the code point to the value used in your Ethernet (FCoE) network. The lossless forwarding class specified in the fixed classifier uses the **rewrite-value** statement as the IEEE 802.1p code point (priority) for FCoE traffic on the FCoE network.

To rewrite the code point value, include the **rewrite-value input ieee code-point *code-point-bits*** statement at the [**edit class-of-service interfaces *fc-interface-name***] hierarchy level.

NOTE: If you are not using the default configuration (priority 3 for FCoE traffic), the lossless forwarding class specified in the FC interface fixed classifier must be mapped to the IEEE 802.1p code point specified in the rewrite value statement.

In order to avoid fate sharing (separate flows that affect each other's throughput), the code point (priority) used for the lossless forwarding class (the code point specified in the rewrite value statement) should be the only code point classified to that forwarding class (at the [edit class-of-service classifiers] hierarchy level). For example, if the rewrite value uses code point 101 for lossless FCoE forwarding class fcoe_fc1, then in the classifier configuration attached to ingress Ethernet interfaces, code point 101 is the only code point that should be classified to the fcoe_fc1 forwarding class. Now if you also attach a classifier to an interface that maps code point 110 to forwarding class fcoe_fc1, then congestion on priority 110 unfairly (and unintentionally) affects the FCoE traffic that uses priority 101. Both priorities 101 and 110 are classified into forwarding class fcoe_fc1, so the traffic from both priorities shares the same fate.

Options *lossless-forwarding-class-name*—Name of the lossless forwarding class.

Required Privilege Level interfaces—To view this statement in the configuration.
interface-control—To add this statement to the configuration.

Related Documentation
- Example: Configuring IEEE 802.1p Priority Remapping on an FCoE-FC Gateway on page 522
- Understanding CoS IEEE 802.1p Priority Remapping on an FCoE-FC Gateway on page 519
- Understanding CoS Classifiers on page 60

forwarding-class (Host Outbound Traffic)

Syntax

```
forwarding-class class-name;
```

Hierarchy Level

```
[edit class-of-service host-outbound-traffic ]
```

Release Information Statement introduced in Junos OS Release 11.3 for the QFX Series.
Statement introduced in Junos OS Release 14.1X53-D20 for the OCX Series.

Description Define forwarding class name for outbound host traffic (traffic generated by the Routing Engine).

Options *class-name*—Name of the forwarding class.

Required Privilege Level interface—To view this statement in the configuration.
interface-control—To add this statement to the configuration.

Related Documentation
- Changing the Host Outbound Traffic Default Queue Mapping on page 126
- Understanding Host Routing Engine Outbound Traffic Queues and Defaults on page 124

 Copyright © 2018, Juniper Networks, Inc.

forwarding-class-sets

Syntax

```
forwarding-class-sets forwarding-class-set-name {
  class class-name;
}
```

Hierarchy Level

[edit class-of-service]

Release Information

Statement introduced in Junos OS Release 11.1 for the QFX Series.
Statement introduced in Junos OS Release 14.1X53-D20 for the OCX Series

Description

Assign forwarding classes to forwarding class sets (priority groups).

Options

fowarding-class-set-name—Name of the forwarding class set.

The remaining statement is explained separately. See CLI Explorer.

Required Privilege Level

interfaces—To view this statement in the configuration.
interface-control—To add this statement to the configuration.

Related Documentation

- Example: Configuring CoS Hierarchical Port Scheduling (ETS) on page 198
- Example: Configuring Forwarding Class Sets on page 120
- Understanding CoS Forwarding Class Sets (Priority Groups) on page 118

forwarding-classes

Syntax

```
forwarding-classes {
  class {
    class-name {
      pfc-priority pfc-priority;
      queue-num queue-number <no-loss>;
    }
  }
}
```

Hierarchy Level

[edit class-of-service]

Release Information

Statement introduced in Junos OS Release 11.1 for the QFX Series.
No-loss option introduced in Junos OS Release 12.3 for the QFX Series.
Statement introduced in Junos OS Release 14.1X53-D20 for the OCX Series
PFC-priority statement introduced in Junos OS Release 17.4R1 for the QFX Series.

Description

Map one or more forwarding classes to a single output queue. Also, when configuring DSCP-based PFC, map a forwarding class to a PFC priority value to use in pause frames when traffic on a DSCP value becomes congested (see *Configuring DSCP-based PFC for Layer 3 Untagged Traffic* for details).

Switches that use different forwarding classes for unicast and multidestination (multicast, broadcast, and destination lookup fail) traffic support 12 forwarding classes and 12 output queues (0 through 11). You map unicast forwarding classes to a unicast queue (0 through 7) and multidestination forwarding classes to a multidestination queue (8 through 11). The queue to which you map a forwarding class determines if the forwarding class is a unicast or multidestination forwarding class.

Switches that use the same forwarding classes for unicast and multidestination traffic support eight forwarding classes and eight output queues (0 through 7). You map forwarding classes to output queues. All traffic classified into one forwarding class (unicast and multidestination) uses the same output queue.

You cannot configure weighted random early detection (WRED) packet drop on forwarding classes configured with the no-loss packet drop attribute. Do not associate a drop profile with lossless forwarding classes.

NOTE: If you map more than one forwarding class to a queue, all of the forwarding classes mapped to the queue must to the same queue must have the same packet drop attribute (all of the forwarding classes must be lossy, or all of the forwarding classes mapped to a queue must be lossless).

OCX Series switches do not support the no-loss packet drop attribute and do not support lossless forwarding classes. On OCX Series switches, do not configure the no-loss packet drop attribute on forwarding classes, and do

Copyright © 2018, Juniper Networks, Inc.

not map traffic to the default **fcoe** and **no-loss** forwarding classes (both of these default forwarding classes carry the no-loss packet drop attribute).

NOTE: On switches that do not use the ELS CLI, if you are using Junos OS Release 12.2, use the default forwarding-class-to-queue mapping for the lossless **fcoe** and **no-loss** forwarding classes. If you explicitly configure the lossless forwarding classes, the traffic mapped to those forwarding classes is treated as lossy (best effort) traffic and does *not* receive lossless treatment.

NOTE: On switches that do not use the ELS CLI, if you are using Junos OS Release 12.3 or later, the default configuration is the same as the default configuration for Junos OS Release 12.2, and the default behavior is the same (the **fcoe** and **no-loss** forwarding classes receive lossless treatment). However, if you explicitly configure lossless forwarding classes, you can configure up to six lossless forwarding classes by specifying the **no-loss** option. If you do not specify the **no-loss** option in an explicit forwarding class configuration, the forwarding class is lossy. For example, if you explicitly configure the **fcoe** forwarding class and you do not include the **no-loss** option, the **fcoe** forwarding class is lossy, not lossless.

Options The remaining statements are explained separately. Click a linked statement in the Syntax section or search for a statement in CLI Explorer for details.

Required Privilege Level interfaces—To view this statement in the configuration.
interface-control—To add this statement to the configuration.

host-outbound-traffic

Syntax

```
host-outbound-traffic {
   forwarding-class class-name;
   dscp-code-point code-point;
}
```

Hierarchy Level

[edit class-of-service]

Release Information

Statement introduced in Junos OS Release 11.3 for the QFX Series.
Statement introduced in Junos OS Release 14.1X53-D20 for the OCX Series.

Description

Allow queue selection for traffic generated by the Routing Engine (host). The selected queue must be configured properly. You can also configure specific DSCP code point bits for the type of service (ToS) field of the generated packets. This configuration does not affect transit packets or incoming packets. This is a global configuration that only affects packets originating on the Routing Engine. If you do not configure an output queue for host outbound traffic, the switch uses the default queue mapping.

Options

The remaining statements are explained separately. See CLI Explorer.

Required Privilege Level

interface—To view this statement in the configuration.
interface-control—To add this statement to the configuration.

Related Documentation

- Changing the Host Outbound Traffic Default Queue Mapping on page 126
- Understanding Host Routing Engine Outbound Traffic Queues and Defaults on page 124

Copyright © 2018, Juniper Networks, Inc.

ieee-802.1

List of Syntax

Syntax (Classifier) on page 651
Syntax (Code-Point Alias) on page 651
Syntax (Multidestination Classifier) on page 651
Syntax (Interface Classifier Association) on page 651
Syntax (Rewrite Rule) on page 651

Syntax (Classifier)

```
ieee-802.1 classifier-name {
  import (classifier-name | default);
  forwarding-class class-name {
    loss-priority level {
      code-points [ aliases ] [ bit-patterns ];
    }
  }
}
```

Syntax (Code-Point Alias)

Syntax (Code-Point Alias Configuration)

```
ieee-802.1 alias-name bit-pattern;
```

Syntax (Multidestination Classifier Configuration)

```
ieee-802.1 classifier-name;
```

Syntax (Interface Classifier Association)

```
ieee-802.1 (classifier-name | default);
```

Syntax (Rewrite Rule Configuration)

```
ieee-802.1 rewrite-name {
  import (rewrite-name | default);
  forwarding-class class-name {
    loss-priority level {
      code-point [ aliases ] [ bit-patterns ];
    }
  }
}
```

Hierarchy Level (Classifier)

[edit class-of-service classifiers],

Hierarchy Level (Code-Point Alias)

[edit class-of-service code-point-aliases],

Hierarchy Level (Multidestination Classifier)

[edit class-of-service multi-destination classifiers],

Hierarchy Level (Interface Classifier Association)

[edit class-of-service interfaces *interface-name* unit *logical-unit-number* classifiers],
[edit class-of-service interfaces *interface-name* unit *logical-unit-number* rewrite-rules],

Hierarchy Level (Rewrite Rule)

[edit class-of-service rewrite-rules]

Release Information

Statement introduced in Junos OS Release 11.1 for the QFX Series.
Statement introduced in Junos OS Release 14.1X53-D20 for the OCX Series.

Description

Configure an IEEE 802.1 classifier, configure an IEEE 802.1 code-point alias, apply a fixed IEEE 802.1 classifier to an interface, or apply an IEEE-802.1 rewrite rule.

Options

classifier-name—Name of the classifier.

The remaining statements are explained separately. See CLI Explorer.

Required Privilege Level

interfaces—To view this statement in the configuration.
interface-control—To add this statement to the configuration.

Related Documentation

- Example: Configuring Unicast Classifiers on page 72
- Defining CoS Code-Point Aliases on page 103
- Defining CoS Rewrite Rules on page 130
- Assigning CoS Components to Interfaces on page 23
- Understanding Applying CoS Classifiers and Rewrite Rules to Interfaces on page 87
- *Understanding Applying CoS Classifiers and Rewrite Rules to Interfaces*
- Understanding CoS Classifiers on page 60
- *Understanding CoS Classifiers*
- Understanding CoS Rewrite Rules on page 127

Copyright © 2018, Juniper Networks, Inc.

ieee-802.1 (Fibre Channel Interfaces)

Syntax

```
ieee-802.1 {
   code-point code-point-bits;
}
```

Hierarchy Level

[edit class-of-service interfaces *fibre-channel-interface-name* rewrite-value input]

Description

Configure the IEEE 802.1p code point value to which all traffic received from the Fibre Channel (FC) network on the specified FC interface is rewritten. After the code point value is rewritten, the interface forwards the traffic to the Ethernet (FCoE) network. This works in conjunction with configuring a fixed classifier on the FC interface. The fixed classifier maps all traffic from the FC network into one lossless forwarding class (the lossless forwarding class must be mapped to the code point specified in the rewrite value). Traffic mapped to the lossless forwarding class uses the IEEE 802.1p priority specified by the code point bits in the rewrite value.

FCoE networks typically use priority 3 (IEEE code point 011) for FCoE traffic. The QFX Series default configuration uses IEEE 802.1p priority 3 for FCoE traffic. Rewriting the code point value enables you to change the IEEE 802.1p priority of the FCoE traffic if the Ethernet network uses a different priority than priority 3 (code point 011).

The system supports only one IEEE 802.1p code point value per FC interface. You cannot configure more than one IEEE 802.1p rewrite value per FC interface. In addition, you can specify only one rewrite value per local FCoE-FC gateway fabric; all interfaces in the local fabric must use the same rewrite value. Attempting to configure FC interfaces in the same local fabric with different rewrite values generates a commit error. You can specify different rewrite values for interfaces that belong to different local FCoE-FC gateway fabrics.

The statement is described separately.

Required Privilege Level

interfaces—To view this statement in the configuration.
interface-control—To add this statement to the configuration.

Related Documentation

- forwarding-class (Fibre Channel Interfaces) on page 645
- Example: Configuring IEEE 802.1p Priority Remapping on an FCoE-FC Gateway on page 522
- Understanding CoS IEEE 802.1p Priority Remapping on an FCoE-FC Gateway on page 519
- Understanding CoS Classifiers on page 60

import

Syntax

```
import (import | default);
```

Hierarchy Level

```
[edit class-of-service classifiers (dscp | dscp-ipv6 | ieee-802.1 | exp) classifier-name],
[edit class-of-service rewrite-rules (dscp | dscp-ipv6 | ieee-802.1 | exp) classifier-name]
```

Release Information

Statement introduced in Junos OS Release 11.1 for the QFX Series.
Statement introduced in Junos OS Release 14.1X53-D20 for the OCX Series.

Description

Specify a default or previously defined classifier.

NOTE: OCX Series switches do not support MPLS, so they do not support EXP classifiers and rewrite rules.

Options

import —Name of the classifier mapping configured at the **[edit class-of-service classifiers]** hierarchy level.

default—Default classifier mapping.

The remaining statements are explained separately. See CLI Explorer.

Required Privilege Level

interfaces—To view this statement in the configuration.
interface-control—To add this statement to the configuration.

Related Documentation

- Example: Configuring Unicast Classifiers on page 72
- Defining CoS BA Classifiers (DSCP, DSCP IPv6, IEEE 802.1p) on page 69
- Defining CoS Rewrite Rules on page 130
- Understanding CoS Classifiers on page 60
- *Understanding CoS Classifiers*
- Understanding CoS Classifiers on page 60
- Understanding CoS Rewrite Rules on page 127

Copyright © 2018, Juniper Networks, Inc.

input (Fibre Channel Interfaces)

Syntax

```
input {
  ieee-802.1{
    code-point code-point-bits;
  }
}
```

Hierarchy Level

[edit class-of-service interfaces *fibre-channel-interface-name* rewrite-value]

Description

Configure the IEEE 802.1p code point value to which all traffic received from the Fibre Channel (FC) network on the specified FC interface is rewritten. After the code point value is rewritten, the interface forwards the traffic to the Ethernet (FCoE) network. This works in conjunction with configuring a fixed classifier on the FC interface. The fixed classifier maps all traffic from the FC network into one lossless forwarding class (the lossless forwarding class must be mapped to the code point specified in the rewrite value). Traffic mapped to the lossless forwarding class uses the IEEE 802.1p priority specified by the code point bits in the rewrite value.

FCoE networks typically use priority 3 (IEEE code point 011) for FCoE traffic. The QFX Series default configuration uses IEEE 802.1p priority 3 for FCoE traffic. Rewriting the code point value enables you to change the IEEE 802.1p priority of the FCoE traffic if the Ethernet network uses a different priority than priority 3 (code point 011).

The system supports only one IEEE 802.1p code point value per FC interface. You cannot configure more than one IEEE 802.1p rewrite value per FC interface. In addition, you can specify only one rewrite value per local FCoE-FC gateway fabric; all interfaces in the local fabric must use the same rewrite value. Attempting to configure FC interfaces in the same local fabric with different rewrite values generates a commit error. You can specify different rewrite values for interfaces that belong to different local FCoE-FC gateway fabrics.

The statements are described separately.

Required Privilege Level

interfaces—To view this statement in the configuration.
interface-control—To add this statement to the configuration.

Related Documentation

- forwarding-class (Fibre Channel Interfaces) on page 645
- Example: Configuring IEEE 802.1p Priority Remapping on an FCoE-FC Gateway on page 522
- Understanding CoS IEEE 802.1p Priority Remapping on an FCoE-FC Gateway on page 519
- Understanding CoS Classifiers on page 60

interfaces (Class of Service)

Syntax

```
interfaces {
interface-name  {
  congestion-notification-profile profile-name {
  }
  forwarding-class forwarding-class-name;
  forwarding-class-set forwarding-class-set-name {
    output-traffic-control-profile profile-name;
  }
  rewrite-value {
    input {
      ieee-802.1{
        code-point code-point-bits;
      }
    }
  }
  scheduler-map scheduler-map-name
  unit logical-unit-number {
    classifiers {
      (dscp | dscp-ipv6 | ieee-802.1 | exp) (classifier-name | default);
    }
    forwarding-class class-name;
    rewrite-rules {
      (dscp | dscp-ipv6 | ieee-802.1 | exp) (classifier-name | default);
    }
  }
}
```

Hierarchy Level

[edit class-of-service]

Release Information

Statement introduced in Junos OS Release 11.1 for the QFX Series.
Statement introduced in Junos OS Release 14.1X53-D20 for the OCX Series

Description

Configure interface-specific CoS properties for incoming packets.

NOTE: Only switches that support direct port scheduling also support applying a scheduler map directly to an interface. When using enhanced transmission selection (ETS) hierarchical port scheduling, you cannot apply a scheduler map directly to an interface; instead, you associate the scheduler map with a traffic control profile and apply the traffic control profile to the interface.

Copyright © 2018, Juniper Networks, Inc.

NOTE: Only switches that support native Fibre Channel interfaces support the rewrite-value statement, which enables you to rewrite the IEEE 802.1p code points on native Fibre Channel interfaces.

NOTE: OCX Series switches do not support MPLS, so they do not support EXP classifiers or rewrite rules. OCX Series switches do not support the congestion-notification-profile configuration statement, which applies priority-based flow control (PFC) to interface output queues.

Options

interface-name—Name of the interface.

The remaining statements are explained separately. See CLI Explorer.

Required Privilege Level

interfaces—To view this statement in the configuration.
interface-control—To add this statement to the configuration.

Related Documentation

- Assigning CoS Components to Interfaces on page 23
- *Interfaces Overview for Switches*

loss-priority (Classifiers)

Syntax

```
loss-priority level {
  code-points [ aliases ] [ bit-patterns ];
}
```

Hierarchy Level

```
[edit class-of-service classifiers (dscp | dscp-ipv6 | ieee-802.1) classifier-name
  forwarding-class class-name]
```

Release Information

Statement introduced in Junos OS Release 11.1 for the QFX Series.
Statement introduced in Junos OS Release 14.1X53-D20 for the OCX Series.

Description

Configure packet loss priority value for a specific set of code-point aliases and bit patterns.

NOTE: OCX Series switches do not support MPLS, so they do not support EXP classifiers.

Options

level—Can be one of the following:

- **low**—Packet has low loss priority.
- **medium-high**—Packet has medium-high loss priority.
- **high**—Packet has high loss priority.

The remaining statement is explained separately. See CLI Explorer.

Required Privilege Level

interfaces—To view this statement in the configuration.
interface-control—To add this statement to the configuration.

Related Documentation

- Example: Configuring Unicast Classifiers on page 72
- Defining CoS BA Classifiers (DSCP, DSCP IPv6, IEEE 802.1p) on page 69
- Understanding CoS Classifiers on page 60
- *Understanding CoS Classifiers*

Copyright © 2018, Juniper Networks, Inc.

loss-priority (Rewrite Rules)

Syntax

```
loss-priority level {
  code-point (alias | bit-pattern);
}
```

Hierarchy Level

```
[edit class-of-service rewrite-rules (dscp | ieee-802.1) rewrite-name forwarding-class
  class-name]
```

Release Information

Statement introduced in Junos OS Release 11.1 for the QFX Series.
Statement introduced in Junos OS Release 14.1X53-D20 for the OCX Series.

Description

Specify a loss priority to which to apply a rewrite rule. The rewrite rule sets the code-point aliases and bit patterns for a specific forwarding class and loss priority. Packets that match the forwarding class and loss priority are rewritten with the rewrite code-point alias or bit pattern.

NOTE: OCX Series switches do not support MPLS, so they do not support EXP rewrite rules.

Options

level—Can be one of the following:

- **low**—Packet has low loss priority.
- **medium-high**—Packet has medium-high loss priority.
- **high**—Packet has high loss priority.

The remaining statement is explained separately. See CLI Explorer.

Required Privilege Level

interfaces—To view this statement in the configuration.
interface-control—To add this statement to the configuration.

Related Documentation

- Defining CoS Rewrite Rules on page 130
- Understanding CoS Rewrite Rules on page 127

multi-destination

Syntax

```
multi-destination {
  classifiers {
    (dscp | dscp-ipv6 | ieee-802.1 | inet-precedence) classifier-name;
  }
}
```

Hierarchy Level

[edit class-of-service],

Release Information

Statement introduced in Junos OS Release 11.1 for the QFX Series.
Statement introduced in Junos OS Release 14.1X53-D20 for the OCX Series.

Description

Define a multicast CoS behavior aggregate (BA) classifier.

Options

The remaining statements are explained separately. See CLI Explorer.

Required Privilege Level

interfaces—To view this statement in the configuration.
interface-control—To add this statement to the configuration.

Related Documentation

- Defining CoS BA Classifiers (DSCP, DSCP IPv6, IEEE 802.1p) on page 69
- Example: Configuring Multidestination (Multicast, Broadcast, DLF) Classifiers on page 75
- Assigning CoS Components to Interfaces on page 23
- Understanding CoS Classifiers on page 60
- *Understanding CoS Classifiers*

Copyright © 2018, Juniper Networks, Inc.

queue-num

Syntax

queue-num *queue-number* <no-loss>;

Hierarchy Level

[edit class-of-service forwarding-classes class *class-name*]

Release Information

Statement introduced in Junos OS Release 11.1 for the QFX Series.
No-loss option introduced in Junos OS Release 12.3 for the QFX Series.
Statement introduced in Junos OS Release 14.1X53-D20 for the OCX Series.

Description

Map a forwarding class to an output queue number. Optionally, configure the forwarding class as a lossless forwarding class. Each switch provides enough output queues so that you can map forwarding classes to queues on a one-to-one basis, so each forwarding class can have a dedicated output queue.

On switches that use different forwarding classes and output queues for unicast and multidestination (multicast, broadcast, destination lookup fail) traffic, the switch supports 12 forwarding classes and 12 output queues, eight of each for unicast traffic and four of each for multidestination traffic. You can map some or all of the eight unicast forwarding classes to a unicast queue (0 through 7) and some or all of the four multidestination forwarding classes to the a multidestination queue (8 through 11). You cannot map a forwarding class to more than one queue (each forwarding class maps to one and only one queue), but you can map multiple forwarding classes to one queue. The queue to which you map a forwarding class determines if the forwarding class is a unicast or multidestination forwarding class.

On switches that use the same forwarding classes and output queues for unicast and multidestination traffic, the switch supports eight forwarding classes and eight output queues. You can map some or all of the eight of the forwarding classes to queues (0 through 7). You cannot map a forwarding class to more than one queue (each forwarding class maps to one and only one queue), but you can map multiple forwarding classes to one queue.

You cannot configure weighted random early detection (WRED) packet drop on forwarding classes configured with the no-loss packet drop attribute. Do not associate a drop profile with lossless forwarding classes. Instead, use priority-based flow control (PFC) to prevent frame drop on lossless forwarding classes.

NOTE: If you map more than one forwarding class to a queue, all of the forwarding classes mapped to the same queue must have the same packet drop attribute (all of the forwarding classes must be lossy, or all of the forwarding classes mapped to a queue must be lossless).

OCX Series switches do not support the no-loss packet drop attribute and do not support lossless forwarding classes. On OCX Series switches, do not configure the no-loss packet drop attribute on forwarding classes, and do

not map traffic to the default **fcoe** and **no-loss** forwarding classes (both of these default forwarding classes carry the no-loss packet drop attribute).

NOTE: On systems that do not use the ELS CLI, if you are using Junos OS Release 12.2, use the default forwarding-class-to-queue mapping for the lossless **fcoe** and **no-loss** forwarding classes. If you explicitly configure lossless forwarding classes, the traffic mapped to those forwarding classes is treated as lossy (best effort) traffic and does *not* receive lossless treatment.

NOTE: On systems that do not use the ELS CLI, if you are using Junos OS Release 12.3 or later, the default configuration is the same as the default configuration for Junos OS Release 12.2, and the default behavior is the same (the **fcoe** and **no-loss** forwarding classes receive lossless treatment). However, if you explicitly configure lossless forwarding classes, you can configure up to six lossless forwarding classes by specifying the **no-loss** option. If you do not specify the **no-loss** option in an explicit forwarding class configuration, the forwarding class is lossy. For example, if you explicitly configure the **fcoe** forwarding class and you do not include the **no-loss** option, the **fcoe** forwarding class is lossy, not lossless.

Options

queue-number—(Switches that use different output queues for unicast and multidestination traffic) Number of the CoS unicast queue (0 through 7) or the CoS multidestination queue (8 through 11).

queue-number—(Switches that use the same output queues for unicast and multidestination traffic) Number of the CoS queue (0 through 7).

no-loss—Optional packet drop attribute keyword to configure the forwarding class as lossless.

Required Privilege Level

interfaces—To view this statement in the configuration.
interface-control—To add this statement to the configuration.

Copyright © 2018, Juniper Networks, Inc.

rewrite-rules

List of Syntax

Syntax (Rewrite Rule Configuration) on page 663
Syntax (Rewrite Rule Association with Interface) on page 663

Syntax (Rewrite Rule Configuration)

```
rewrite-rules {
  (dscp | dscp-ipv6 | ieee-802.1 | exp) rewrite-name {
    import (rewrite-name | default);
    forwarding-class class-name {
      loss-priority priority code-point (alias | bits);
    }
  }
}
```

Syntax (Rewrite Rule Association with Interface)

```
rewrite-rules {
  (dscp | dscp-ipv6 | ieee-802.1 | exp) rewrite-name;
}
```

Hierarchy Level (Rewrite Rule Configuration)

```
[edit class-of-service],
```

Hierarchy Level (Rewrite Rule Association with Interface)

```
[edit class-of-service interfaces interface-name unit logical-unit-number]
```

Release Information

Statement introduced in Junos OS Release 11.1 for the QFX Series.
EXP statement introduced in Junos OS Release 12.3 for the QFX Series.
Statement introduced in Junos OS Release 14.1X53-D20 for the OCX Series.

Description

Configure rewrite rules that map traffic to code points when traffic exits the system, and apply the rewrite rules to a specific interface.

MPLS EXP rewrite rules can only be bound to logical interfaces, not to physical interfaces. You can configure up to 64 EXP rewrite rules, but you can use only 16 EXP rewrite rules on switch interfaces at any given time.

NOTE: OCX Series switches do not support MPLS, so they do not support EXP rewrite rules.

Options

The remaining statements are explained separately. See CLI Explorer.

Required Privilege Level

interface—To view this statement in the configuration.
interface-control—To add this statement to the configuration.

Related Documentation

- Defining CoS Rewrite Rules on page 130
- *Configuring Rewrite Rules for MPLS EXP Classifiers*
- Understanding CoS Rewrite Rules on page 127
- *Understanding CoS MPLS EXP Classifiers and Rewrite Rules*

Copyright © 2018, Juniper Networks, Inc.

rewrite-value (Fibre Channel Interfaces)

Syntax

```
rewrite-value {
  input {
    ieee-802.1{
      code-point code-point-bits;
    }
  }
}
```

Hierarchy Level

[edit class-of-service interfaces *fibre-channel-interface-name*]

Description

Configure the IEEE 802.1p code point value (priority) for all traffic received from the Fibre Channel (FC) network on the specified FC interface. Instead of using the default priority 3 (011) for FCoE traffic, the priority is rewritten to the specified priority before being forwarded. This works in conjunction with configuring a fixed classifier on the FC interface. The fixed classifier maps all traffic from the FC network into one lossless forwarding class (the lossless forwarding class must be mapped to the code point specified in the rewrite value). Traffic mapped to the lossless forwarding class uses the IEEE 802.1p priority specified by the code point bits in the rewrite value.

FCoE traffic typically uses priority 3 (IEEE code point 011). The QFX Series default configuration uses IEEE 802.1p priority 3 for FCoE traffic. Rewriting the code point value enables you to change the IEEE 802.1p priority of the FCoE traffic if the Ethernet network uses a different priority than priority 3 (code point 011) for FCoE traffic.

The system supports only one IEEE 802.1p code point value per FC interface, so you cannot configure more than one IEEE 802.1p rewrite value per FC interface. In addition, you can specify only one rewrite value per local FCoE-FC gateway fabric; all interfaces in the local fabric must use the same rewrite value. Attempting to configure FC interfaces in the same local fabric with different rewrite values generates a commit error. You can specify different rewrite values for interfaces that belong to different local FCoE-FC gateway fabrics.

NOTE: In order to avoid fate sharing (separate flows that affect each others' throughput), the code point used for the rewrite value should be the only code point used for the lossless FCoE forwarding class (the forwarding class used for the fixed classifier on the Fibre Channel interface). When you configure classifiers for ingress Ethernet interfaces, map only the rewrite value code point to the forwarding class.

For example, if the rewrite value uses code point 101 for lossless FCoE forwarding class fcoe_fc1, then in the classifier configuration attached to ingress Ethernet interfaces, code point 101 is the only code point that should be classified to the fcoe_fc1 forwarding class. Now if you also attach a classifier to an interface that maps code point 110 to forwarding class fcoe_fc1,

then congestion on priority 110 unfairly (and unintentionally) affects the FCoE traffic that uses priority 101. Both priorities 101 and 110 are classified into forwarding class fcoe_fc1, so the traffic from both priorities shares the same fate.

The remaining statements are described separately.

Required Privilege Level

interfaces—To view this statement in the configuration.
interface-control—To add this statement to the configuration.

Related Documentation

- forwarding-class (Fibre Channel Interfaces) on page 645
- Example: Configuring IEEE 802.1p Priority Remapping on an FCoE-FC Gateway on page 522
- Understanding CoS IEEE 802.1p Priority Remapping on an FCoE-FC Gateway on page 519
- Understanding CoS Classifiers on page 60

Copyright © 2018, Juniper Networks, Inc.

unit

Syntax

```
unit logical-unit-number {
  classifiers {
    (dscp | dscp-ipv6 | ieee-802.1 | exp) (classifier-name | default);
  }
  forwarding-class class-name;
  rewrite-rules {
    (dscp | dscp-ipv6 | ieee-802.1 | exp) (classifier-name | default);
  }
}
```

Hierarchy Level

[edit class-of-service interfaces *interface-name*]

Release Information

Statement introduced in Junos OS Release 11.1 for the QFX Series.
Statement introduced in Junos OS Release 14.1X53-D20 for the OCX Series.

Description

Configure a logical interface on the physical device. You must configure a logical interface to use the physical device.

NOTE: OCX Series switches do not support MPLS, so they do not support EXP classifiers and rewrite rules.

Options

logical-unit-number—Number of the logical unit.

Range: 0 through 16,385

The remaining statements are explained separately. See CLI Explorer.

Required Privilege Level

interfaces—To view this statement in the configuration.
interface-control—To add this statement to the configuration.

Related Documentation

- Assigning CoS Components to Interfaces on page 23

Copyright © 2018, Juniper Networks, Inc.

CHAPTER 12

Configuration Statements (Node Device Scheduling)

- buffer-size on page 670
- drop-probability on page 675
- drop-profile on page 676
- drop-profile-map on page 677
- drop-profiles on page 678
- fill-level on page 679
- forwarding-class on page 681
- forwarding-class-set on page 682
- guaranteed-rate on page 683
- interpolate on page 684
- loss-priority (Drop Profiles) on page 685
- output-traffic-control-profile on page 686
- priority (Schedulers) on page 687
- protocol (Drop Profile Map) on page 688
- scheduler on page 689
- scheduler-map on page 690
- scheduler-maps on page 690
- schedulers on page 691
- shaping-rate on page 692
- traffic-control-profiles on page 694
- transmit-rate on page 695

Copyright © 2018, Juniper Networks, Inc.

buffer-size

Syntax

```
buffer-size (percent percent | remainder);
```

Hierarchy Level

[edit class-of-service schedulers *scheduler-name*]

Release Information

Statement introduced in Junos OS Release 12.3 for the QFX Series.
Statement introduced in Junos OS Release 14.1X53-D20 for the OCX Series.

Description

On all switches, you configure the proportion of port buffers allocated to a particular output queue using the following process:

1. Configure a scheduler and set the **buffer-size** option.

2. Use a scheduler map to map the scheduler to the forwarding class that is mapped to the queue to which you want to apply the buffer size.

   For example, suppose that you want to change the dedicated buffer allocation for FCoE traffic. FCoE traffic is mapped to the fcoe forwarding class, and the fcoe forwarding class is mapped to queue 3 (this is the default configuration). To use default FCoE traffic mapping, in the scheduler map configuration, map the scheduler to the **fcoe** forwarding class.

3. If you are using enhanced transmission selection (ETS) hierarchical scheduling, associate the scheduler map with the traffic control profile you want to use on the egress ports that carry FCoE traffic. If you are using direct port scheduling, skip this step.

4. If you are using ETS, associate the traffic control profile that includes the scheduler map with the desired egress ports. For this example, you associate the traffic control profile with the ports that carry FCoE traffic. If you are using port scheduling, associate the scheduler map with the desired egress ports.

   Queue 3, which is mapped to the fcoe forwarding class and therefore to the FCoE traffic, receives the dedicated buffer allocation specified in the **buffer-size** statement.

NOTE: **The total of all of the explicitly configured buffer size percentages for all of the queues on a port cannot exceed 100 percent.**

QFX10000 Switches

On QFX10000 switches, the buffer size is the amount of time in milliseconds of port bandwidth that a queue can use to continue to transmit packets during periods of congestion, before the buffer runs out and packets begin to drop.

Copyright © 2018, Juniper Networks, Inc.

The switch can use up to 100 ms total (combined) buffer space for all queues on a port. A buffer-size configured as one percent is equal to 1 ms of buffer usage. A buffer-size of 15 percent (the default value for the best effort and network control queues) is equal to 15 ms of buffer usage.

The total buffer size of the switch is 4 GB. A 40-Gigabit port can use up to 500 MB of buffer space, which is equivalent to 100 ms of port bandwidth on a 40-Gigabit port. A 10-Gigabit port can use up to 125 MB of buffer space, which is equivalent to 100 ms of port bandwidth on a 10-Gigabit port. The total buffer sizes of the eight output queues on a port cannot exceed 100 percent, which is equal to the full 100 ms total buffer available to a port. The maximum amount of buffer space any queue can use is also 100 ms (which equates to a 100 percent buffer-size configuration), but if one queue uses all of the buffer, then no other queue receives buffer space.

There is no minimum buffer allocation, so you can set the buffer-size to zero (0) for a queue. However, we recommend that on queues on which you enable PFC to support lossless transport, you allocate a minimum of 5 ms (a minimum buffer-size of 5 percent). The two default lossless queues, fcoe and no-loss, have buffer-size default values of 35 ms (35 percent).

Queue buffer allocation is dynamic, shared among ports as needed. However, a queue cannot use more than its configured amount of buffer space. For example, if you are using the default CoS configuration, the best-effort queue receives a maximum of 15 ms of buffer space because the default transmit rate for the best-effort queue is 15 percent.

If a switch experiences congestion, queues continue to receives their full buffer allocation until 90 percent of the 4 GB buffer space is consumed. When 90 percent of the buffer space is in use, the amount of buffer space per port, per queue, is reduced in proportion to the configured buffer size for each queue. As the percentage of consumed buffer space rises above 90 percent, the amount of buffer space per port, per queue, continues to be reduced.

On 40-Gigabit ports, because the total buffer is 4 GB and the maximum buffer a port can use is 500 MB, up to seven 40-Gigabit ports can consume their full 100 ms allocation of buffer space. However, if an eighth 40-Gigabit port requires the full 500 MB of buffer space, then the buffer allocations are proportionally reduced because the buffer consumption is above 90 percent.

On 10-Gigabit ports, because the total buffer is 4 GB and the maximum buffer a port can use is 125 MB, up to 28 10-Gigabit ports can consume their full 100 ms allocation of buffer space. However, if a 29th 10-Gigabit port requires the full 125 MB of buffer space, then the buffer allocations are proportionally reduced because the buffer consumption is above 90 percent.

QFX5100, EX4600, QFX3500, and QFX3600 Switches, and QFabric Systems

Set the dedicated buffer size of the egress queue that you bind the scheduler to in the scheduler map configuration. The switch allocates space from the global dedicated buffer pool to ports and queues in a hierarchical manner. The switch allocates an equal number of dedicated buffers to each egress port, so each egress port receives the same amount of dedicated buffer space. The amount of dedicated buffer space per port is not configurable.

However, the **buffer-size** statement allows you to control the way each port allocates its share of dedicated buffers to its queues. For example, if a port only uses two queues to forward traffic, you can configure the port to allocate all of its dedicated buffer space to those two ports and avoid wasting buffer space on queues that are not in use. We recommend that the buffer size should be the same size as the minimum guaranteed transmission rate (the **transmit-rate**).

Copyright © 2018, Juniper Networks, Inc.

Default The default behavior of the differs on different switches.

QFX10000 Switches

If you do not configure buffer-size and you do not explicitly configure a queue scheduler, the default buffer-size is the default transmit rate of the queue. If you explicitly configure a queue scheduler, the default buffer allocations are not used. If you explicitly configure a queue scheduler, configure the buffer-size for each queue in the scheduler, keeping in mind that the total buffer-size of the queues cannot exceed 100 percent (100 ms).

Table 138 on page 673 shows the default queue buffer sizes on QFX10000 switches. The default buffer size is the same as the default transmit rate for each default queue:

Table 138: Default Output Queue Buffer Sizes (QFX10000 Switches)

Queue Number	Forwarding Class	Transmit Rate	Buffer Size
0	best-effort	15%	15%
3	fcoe	35%	35%
4	no-loss	35%	35%
7	network-control	15%	15%

By default, only the queues mapped to the default forwarding classes receive buffer space from the port buffer pool. (Buffers are not wasted on queues that do not carry traffic.)

QFX5100, EX4600, QFX3500, and QFX3600 Switches, and QFabric Systems

The port allocates dedicated buffers to queues that have an explicitly configured scheduler buffer size. If you do not explicitly configure a scheduler buffer size for a queue, the port serves the explicitly configured queues first. Then the port divides the remaining dedicated buffers equally among the queues that have an explicitly attached scheduler *without* an explicitly configured buffer size configuration. (If you configure a scheduler, but you do not configure the buffer size parameter, the default is equivalent to configuring the buffer size with the **remainder** option.)

If you use the default scheduler and scheduler map on a port (no explicit scheduler configuration), then the port allocates its dedicated buffer pool to queues based on the default scheduling. Table 139 on page 674 shows the default queue buffer sizes. The default buffer size is the same as the default transmit rate for each default queue:

Table 139: Default Output Queue Buffer Sizes (QFX5100, EX4600, QFX3500, and QFX3600 Switches, and QFabric Systems)

Queue Number	Forwarding Class	Transmit Rate	Buffer Size
0	best-effort	5%	5%
3	fcoe	35%	35%
4	no-loss	35%	35%
7	network-control	5%	5%
8	mcast	20%	20%

By default, only the queues mapped to the default forwarding classes receive buffer space from the port buffer pool. (Buffers are not wasted on queues that do not carry traffic.)

NOTE: OCX Series switches do not support lossless transport. On OCX Series switches, do not map traffic to the lossless default fcoe and no-loss forwarding classes. OCX Series default DSCP classification does not map traffic to the fcoe and no-loss forwarding classes, so by default, the OCX system does not classify traffic into those forwarding classes. (On other switches, the fcoe and no-loss forwarding classes provide lossless transport for Layer 2 traffic. OCX Series switches do not support lossless Layer 2 transport.) The active forwarding classes (**best-effort**, **network-control**, and **mcast**) share the unused bandwidth assigned to the **fcoe** and **no-loss** forwarding classes.

Options

percent ***percent***—Percentage of the port dedicated buffer pool allocated to the queue (or queues) mapped to the scheduler.

remainder—Remaining dedicated buffer pool after the port satisfies the needs of the explicitly configured buffers. The port divides the remaining buffers equally among the queues that are explicitly attached to a scheduler but that do not have an explicit buffer size configuration (or are configured with **remainder** as the buffer size).

Required Privilege Level

interfaces—To view this statement in the configuration.
interface-control—To add this statement to the configuration.

Copyright © 2018, Juniper Networks, Inc.

drop-probability

List of Syntax

QFX5100, EX4600, QFX3500, and QFX3600, Switches, QFabric Systems on page 675
QFX10000 Switches on page 675

QFX5100, EX4600, QFX3500, and QFX3600, Switches, QFabric Systems

```
drop-probability 0 drop-probability high-value;
```

QFX10000 Switches

```
drop-probability percentage1 percentage2 ... percentage32;
```

Hierarchy Level

[edit class-of-service drop-profiles *profile-name* interpolate]

Release Information

Statement introduced in Junos OS Release 11.1 for the QFX Series.
Statement introduced in Junos OS Release 14.1X53-D20 for the OCX Series.

Description

When configuring WRED, map the packet **drop-probability** to the fullness of a queue (fill-level). You configure the **fill-level** and **drop-probability** statements in related pairs. The pairs of fill level and drop probability values set a probability of dropping packets at a specified queue fullness value.

On switches that support only two fill level/drop probability pairs, the first drop probability is always zero. The first fill level/drop probability pair sets the drop start point, and the second fill level/drop probability pair sets the drop end point.

On switches that support 32 fill level/drop probability pairs, the first fill level/drop probability pair sets the drop start point, and the last fill level/drop probability pair sets the drop end point.

As the queue fills from the drop start point to the drop end point, the rate of packet drop increases in a curve pattern. The higher the queue fill level, the higher the probability of dropping packets.

Options

0 (switches that support only two fill level/drop probability pairs)—Probability that packets will drop at the lowest **fill-level** value. This is always zero, because until the queue reaches the specified low **fill-level** value, no packets are scheduled to drop.

Range: 0

high-value (switches that support only two fill level/drop probability pairs)—The maximum probability that packets will drop before queue fullness exceeds the high value of the queue **fill-level**, expressed as a percentage. If the queue fills beyond the high **fill-level** value, all packets drop.

Range: 0 through 100 percent

percentage1 percentage2 ... percentage32 (switches that support 32 fill level/drop probability pairs)—The probability that packets will drop before the queue fullness exceeds the **fill-level** value, expressed as a percentage. Each drop probability pairs with a queue fill level to define the probability of a packet dropping at a specified queue fullness.

Range: 0 through 100 percent

Required Privilege Level
interface—To view this statement in the configuration.
interface-control—To add this statement to the configuration.

drop-profile

Syntax

```
drop-profile profile-name;
```

Hierarchy Level

```
[edit class-of-service schedulers scheduler-name drop-profile-map loss-priority (low |
  medium-high | high) protocol protocol]
```

Release Information
Statement introduced in Junos OS Release 11.1 for the QFX Series.
Statement introduced in Junos OS Release 14.1X53-D20 for the OCX Series.

Description
Define drop profiles for weighted random early detection (WRED). When a packet arrives, WRED checks the queue fill level specified in the drop profile. If the fill level corresponds to a nonzero drop probability, the WRED algorithm determines whether to drop the arriving packet.

Options
profile-name—Name of the drop profile.

Required Privilege Level
interfaces—To view this statement in the configuration.
interface-control—To add this statement to the configuration.

Related Documentation

- Example: Configuring Drop Profile Maps on page 258

Copyright © 2018, Juniper Networks, Inc.

drop-profile-map

Syntax

```
drop-profile-map loss-priority (low | medium-high | high) protocol protocol drop-profile
  drop-profile-name;
```

Hierarchy Level

[edit class-of-service schedulers *scheduler-name*]

Release Information

Statement introduced in Junos OS Release 11.1 for the QFX Series.
Statement introduced in Junos OS Release 14.1X53-D20 for the OCX Series.

Description

Map a drop profile to a loss priority and protocol for weighted random early detection (WRED). When a packet arrives, WRED checks the queue fill level. If the fill level corresponds to a nonzero drop probability, the WRED algorithm determines whether to drop the arriving packet.

Options

The remaining statements are explained separately. See CLI Explorer.

Required Privilege Level

interfaces—To view this statement in the configuration.
interface-control—To add this statement to the configuration.

Related Documentation

- Example: Configuring Drop Profile Maps on page 258

drop-profiles

List of Syntax

Switches Except QFX10000, QFabric Systems on page 678
QFX10000 Switches on page 678

Switches Except QFX10000, QFabric Systems

```
drop-profiles {
  profile-name {
    interpolate {
      fill-level low-value fill-level high-value drop-probability 0 drop-probability high-value;
    }
  }
}
```

QFX10000 Switches

```
drop-profiles {
  profile-name {
    interpolate {
      fill-level level1 level2 ... level32 drop-probability percent1 percent2 ... percent32;
    }
  }
}
```

Hierarchy Level

[edit class-of-service]

Release Information

Statement introduced in Junos OS Release 11.1 for the QFX Series.
Statement introduced in Junos OS Release 14.1X53-D20 for the OCX Series.

Description

Define drop profiles for weighted random early detection (WRED).

For a packet to be dropped, it must match the drop profile. When a packet arrives, WRED checks the queue fill level. If the fill level corresponds to a nonzero drop probability, the WRED algorithm determines whether to drop the arriving packet.

Options

profile-name—Name of the drop profile.

The remaining statements are explained separately.

Required Privilege Level

interface—To view this statement in the configuration.
interface-control—To add this statement to the configuration.

Copyright © 2018, Juniper Networks, Inc.

fill-level

List of Syntax

QFX5100, EX4600, QFX3500, and QFX3600, Switches, QFabric Systems on page 679
QFX10000 Switches on page 679

QFX5100, EX4600, QFX3500, and QFX3600, Switches, QFabric Systems

```
fill-level low-value fill-level high-value;
```

QFX10000 Switches

```
fill-level level1 level2 ... level32;
```

Hierarchy Level

[edit class-of-service drop-profiles *profile-name* interpolate]

Release Information

Statement introduced in Junos OS Release 11.1 for the QFX Series.
Statement introduced in Junos OS Release 14.1X53-D20 for the OCX Series.

Description

When configuring weighted random early detection (WRED), map the fullness of a queue to a packet drop-probability value. You configure the **fill-level** and **drop-probability** statements in related pairs. The pairs of fill level and drop probability values set a probability of dropping packets at a specified queue fullness value.

The first fill level is the packet drop start point. Packets do not drop until the queue fullness reaches the first fill level. The last fill level is the packet drop end point. After the queue exceeds the fullness set by the drop end point, all non-ECN packets are dropped. As the queue fills from the drop start point to the drop end point, the rate of packet drop increases in a curve pattern. The higher the queue fill level, the higher the probability of dropping packets.

On switches that support only two fill level/drop probability pairs, the two pairs are the drop start point and the drop end point. On switches that support up to 32 fill level/drop probability pairs, you can configure intermediate interpolations between the drop start point and the drop end point, which provides greater flexibility in controlling the packet drop curve.

NOTE: **Do not configure the last fill level as 100 percent.**

Options

low-value (switches that support only two fill level/drop probability pairs)—Fullness of the queue before packets begin to drop, expressed as a percentage. The low value must be less than the high value.

Range: 0 through 100

high-value (switches that support only two fill level/drop probability pairs)—Fullness of the queue before it reaches the maximum drop probability. If the queue fills beyond the fill level high value, all packets drop. The high value must be greater than the low value.

Range: 0 through 100

level1 level2 ... level32 (switches that support 32 fill level/drop probability pairs)—The queue fullness level, expressed as a percentage. Each fill level pairs with a drop probability to define the probability of a packet dropping at a specified queue fullness.

Range: 0 through 100

Required Privilege Level

interface—To view this statement in the configuration.
interface-control—To add this statement to the configuration.

Copyright © 2018, Juniper Networks, Inc.

forwarding-class

List of Syntax

Classifier on page 681
Rewrite Rule on page 681
Scheduler Map on page 681
Interface on page 681

Classifier

```
forwarding-class class-name {
  loss-priority level {
    code-points [ aliases ] [ bit-patterns ];
  }
}
```

Rewrite Rule

```
forwarding-class class-name {
  loss-priority level {
    code-point [ aliases ] [ bit-patterns ];
  }
}
```

Scheduler Map

```
forwarding-class class-name {
  scheduler scheduler-name;
}
```

Interface

```
forwarding-class class-name;
```

Classifier Hierarchy Level

```
[edit class-of-service classifiers (dscp | dscp-ipv6 | ieee-802.1 | exp) classifier-name],
```

Rewrite Rule Hierarchy Level

```
[edit class-of-service rewrite-rules] (dscp | dscp-ipv6 | ieee-802.1) rewrite-name | exp],
```

Scheduler Map Hierarchy Level

```
[edit class-of-service scheduler-maps map-name],
```

Interface Hierarchy Level

```
[edit class-of-service interfaces interface-name unit logical-unit-number]
```

Release Information

Statement introduced in Junos OS Release 11.1 for the QFX Series.
Statement introduced in Junos OS Release 14.1X53-D20 for the OCX Series.

Description

- Classifiers—Assign incoming traffic to the specified forwarding class based on the specified code point values and assign that traffic the specified loss priority

- Rewrite rules—At the egress interface, change (rewrite) the value of the code point bits and the loss priority to specified new values for traffic assigned to the specified forwarding class, before forwarding the traffic to the next hop.
- Scheduler maps—Apply the specified scheduler to the specified forwarding class.
- Interfaces—Assign the specified forwarding class to the interface to use as a fixed classifier (all incoming traffic on the interface is classified into that forwarding class).

NOTE: OCX Series switches do not support MPLS, so they do not support EXP classifiers or rewrite rules.

Options *class-name*—Name of the forwarding class.

The remaining statements are explained separately. See CLI Explorer.

Required Privilege Level interfaces—To view this statement in the configuration.
interface-control—To add this statement to the configuration.

forwarding-class-set

Syntax

```
forwarding-class-set forwarding-class-set-name {
  output-traffic-control-profile profile-name;
}
```

Hierarchy Level

```
[edit class-of-service interfaces interface-name]
```

Release Information Statement introduced in Junos OS Release 11.1 for the QFX Series.
Statement introduced in Junos OS Release 14.1X53-D20 for the OCX Series.

Description Apply a previously defined forwarding class set to an output traffic control profile.

Options *fowarding-class-set-name*—Name of the forwarding class set.

The remaining statement is explained separately. See CLI Explorer.

Required Privilege Level interfaces—To view this statement in the configuration.
interface-control—To add this statement to the configuration.

Related Documentation

- Example: Configuring CoS Hierarchical Port Scheduling (ETS) on page 198
- Assigning CoS Components to Interfaces on page 23
- Understanding CoS Forwarding Class Sets (Priority Groups) on page 118

 Copyright © 2018, Juniper Networks, Inc.

guaranteed-rate

Syntax

```
guaranteed-rate (rate| percent percentage);
```

Hierarchy Level

[edit class-of-service traffic-control-profiles *traffic-control-profile-name*]

Release Information

Statement introduced in Junos OS Release 11.1 for the QFX Series.
Statement introduced in Junos OS Release 14.1X53-D20 for the OCX Series.

Description

Configure a guaranteed minimum rate of transmission for a traffic control profile. The sum of the guaranteed rates of all of the forwarding class sets (priority groups) on a port should not exceed the total port bandwidth. The guaranteed rate also determines the amount of excess (extra) port bandwidth that the priority group (forwarding class set) can share. Extra port bandwidth is allocated among the priority groups on a port in proportion to the guaranteed rate of each priority group.

NOTE: You cannot configure a guaranteed rate for a forwarding class set (priority group) that includes strict-high priority queues. If the traffic control profile is for a forwarding class set that contains strict-high priority queues, do not configure a guaranteed rate.

Default

If you do not specify a guaranteed rate, the guaranteed rate is zero (0) and there is no minimum guaranteed bandwidth.

NOTE: If you do not configure a guaranteed rate for a traffic control profile, the queues that belong to any forwarding class set (priority group) that uses that traffic control profile cannot have a configured transmit rate. The result is that there is no minimum guaranteed bandwidth for those queues and that those queues can be starved during periods of congestion.

Options

percent ***percentage***—Minimum percentage of transmission capacity allocated to the forwarding class set or logical interface.

Range: 1 through 100 percent

rate—Minimum transmission rate allocated to the forwarding class set or logical interface, in bits per second (bps). You can specify a value in bits per second either as a complete decimal number or as a decimal number followed by the abbreviation **k** (1000), **m** (1,000,000), or **g** (1,000,000,000).

Range: 1000 through 10,000,000,000 bps

Required Privilege Level

interfaces—To view this statement in the configuration.
interface-control—To add this statement to the configuration.

Related Documentation

- Example: Configuring CoS Hierarchical Port Scheduling (ETS) on page 198
- Example: Configuring Traffic Control Profiles (Priority Group Scheduling) on page 188
- Example: Configuring Minimum Guaranteed Output Bandwidth on page 229
- Understanding CoS Traffic Control Profiles on page 182
- **output-traffic-control-profile on page 686**

interpolate

List of Syntax

QFX5100, EX4600, QFX3500, and QFX3600, Switches, QFabric Systems on page 684
QFX10000 Switches on page 684

QFX5100, EX4600, QFX3500, and QFX3600, Switches, QFabric Systems

```
interpolate {
   fill-level low-value fill-level high-value;
   drop-probability 0 drop-probability high-value;
}
```

QFX10000 Switches

```
interpolate {
   fill-level level1 level2 ... level32 drop-probability percent1 percent2 ... percent32;
}
```

Hierarchy Level

```
[edit class-of-service drop-profiles profile-name]
```

Release Information

Statement introduced in Junos OS Release 11.1 for the QFX Series.
Statement introduced in Junos OS Release 14.1X53-D20 for the OCX Series.

Description

Specify values for interpolating the relationship between queue fill level and drop probability for weighted random early detection (WRED) drop profiles.

The remaining statements are explained separately. See CLI Explorer.

Required Privilege Level

interface—To view this statement in the configuration.
interface-control—To add this statement to the configuration.

Copyright © 2018, Juniper Networks, Inc.

loss-priority (Drop Profiles)

Syntax

loss-priority *level* protocol *protocol* drop-profile *profile-name*;

Hierarchy Level

[edit class-of-service schedulers *scheduler-name* drop-profile-map]

Release Information

Statement introduced in Junos OS Release 11.1 for the QFX Series.
Statement introduced in Junos OS Release 14.1X53-D20 for the OCX Series.

Description

Configure packet loss priority value for a weighted random early detection (WRED) drop profile mapped to a system drop profile.

Options

level—Can be one of the following:

- **low**—Packet has low loss priority.
- **medium-high**—Packet has medium-high loss priority.
- **high**—Packet has high loss priority.

The remaining statements are explained separately. See CLI Explorer.

Required Privilege Level

interfaces—To view this statement in the configuration.
interface-control—To add this statement to the configuration.

output-traffic-control-profile

Syntax

```
output-traffic-control-profile profile-name;
```

Hierarchy Level

```
[edit class-of-service interfaces interface-name forwarding-class-set
  forwarding-class-set-name]
```

Release Information

Statement introduced in Junos OS Release 11.1 for the QFX Series.
Statement introduced in Junos OS Release 14.1X53-D20 for the OCX Series.

Description

Apply an output traffic scheduling and shaping profile to a forwarding class set (priority group).

Options

profile-name—Name of the traffic-control profile to apply to the specified forwarding class set.

Required Privilege Level

interfaces—To view this statement in the configuration.
interface-control—To add this statement to the configuration.

Related Documentation

- Example: Configuring CoS Hierarchical Port Scheduling (ETS) on page 198
- Example: Configuring Traffic Control Profiles (Priority Group Scheduling) on page 188
- Assigning CoS Components to Interfaces on page 23
- Understanding CoS Traffic Control Profiles on page 182

Copyright © 2018, Juniper Networks, Inc.

priority (Schedulers)

Syntax

priority *priority*;

Hierarchy Level

[edit class-of-service schedulers *scheduler-name*]

Release Information

Statement introduced in Junos OS Release 11.1 for the QFX Series.
Statement introduced in Junos OS Release 14.1X53-D20 for the OCX Series.

Description

Specify the packet bandwidth-scheduling priority value.

NOTE: On QFabric systems, the priority statement is valid only for Node device queue scheduling. The priority statement is notallowed for Interconnect device queue scheduling. If you map a schedulerthat includes a priority configuration to a fabric forwardingclass at the [edit class-of-service scheduler-map-fcset] hierarchylevel, the system generates a commit error. (On the Interconnect device,fabric fc-sets are not user-definable. Only the fabric_fcset_strict_high fabric fc-set is configured with high priority, and this configurationcannot be changed.)

Options

priority—It can be one of the following:

- **low**—Scheduler has low priority.
- **high**—Scheduler has high priority (QFX10000 Series switches only)
- **strict-high**—Scheduler has strict high priority. On QFX5100, EX4600, QFX3500, and QFX3600 switches, and on QFabric systems, you can configure only one queue as a strict-high priority queue. On QFX10000 switches, you can configure as many strict-high priority queues as you want. However, because strict-high priority traffic takes precedence over all other traffic, too much strict-high priority traffic can starve the other output queues.

  Strict-high priority allocates the scheduled bandwidth to the packets on the queue before any other queue receives bandwidth. Other queues receive the bandwidth that remains after the strict-high queue has been serviced.

  NOTE: On QFX10000 switches, we strongly recommend that you apply a transmit rate to strict-high priority queues to prevent them from starving other queues. A transmit rate configured on a strict-high priority queue limits the amount of traffic that receives strict-high priority treatment to the amount or percentage set by the transmit rate. The switch treats traffic in excess of the transmit rate as best-effort traffic that receives bandwidth from the leftover (excess) port bandwidth pool. On strict-high priority

queues, all traffic that exceeds the transmit rate shares in the port excess bandwidth pool based on the strict-high priority excess bandwidth sharing weight of “1”, which is not configurable. The actual amount of extra bandwidth that traffic exceeding the transmit rate receives depends on how many other queues consume excess bandwidth and the excess rates of those queues.

On QFX5100, EX4600, QFX3500, and QFX3600 switches, and on QFabric systems, we recommend that you always apply a shaping rate to strict-high priority queues to prevent them from starving other queues. A shaping rate (shaper) sets the maximum amount of bandwidth a queue can consume. (Unlike using the transmit rate on a QFX10000 switch to limit traffic that receives strict-high priority treatment, traffic that exceeds the shaping rate is dropped, and is not treated as best-effort traffic that shares in excess bandwidth.) If you do not apply a shaping rate to limit the amount of bandwidth a strict-high priority queue can use, then the strict-high priority queue can use all of the available port bandwidth and starve other queues on the port.

Required Privilege Level
interfaces—To view this statement in the configuration.
interface-control—To add this statement to the configuration.

protocol (Drop Profile Map)

Syntax

```
protocol protocol drop-profile profile-name;
```

Hierarchy Level

```
[edit class-of-service schedulers scheduler-name drop-profile-map loss-priority (low |
  medium-high | high)]
```

Release Information
Statement introduced in Junos OS Release 11.1 for the QFX Series.
Statement introduced in Junos OS Release 14.1X53-D20 for the OCX Series.

Description
Configure the protocol type for the specified weighted random early detection (WRED) drop profile.

Options
protocol—Type of protocol. The protocol can be:

- **any**—Accept any protocol type.

The remaining statement is explained separately. See CLI Explorer.

Required Privilege Level
interfaces—To view this statement in the configuration.
interface-control—To add this statement to the configuration.

Copyright © 2018, Juniper Networks, Inc.

scheduler

Syntax

scheduler *scheduler-name*;

Hierarchy Level

[edit class-of-service scheduler-maps *map-name* forwarding-class *class-name*]

Release Information

Statement introduced in Junos OS Release 11.1 for the QFX Series.
Statement introduced in Junos OS Release 14.1X53-D20 for the OCX Series.

Description

Map a scheduler to a forwarding class using a scheduler map.

NOTE: On QFX5200 only, absolute CoS rate limits for transmit rate and shaping rate do not reflect 50g and 100g interfaces. Therefore this statement does not affect those interfaces for QFX5200 in release 15.1X53-D30.

Options

scheduler-name—Name of the scheduler to map to the forwarding class.

Required Privilege Level

interfaces—To view this statement in the configuration.
interface-control—To add this statement to the configuration.

scheduler-map

Syntax

```
scheduler-map map-name;
```

Enhanced Transmission Selection (ETS) Hierarchical Scheduling

```
[edit class-of-service traffic-control-profiles traffic-control-profile-name]
```

Port Scheduling

```
[edit class-of-service interfaces interface-name]
```

Release Information

Statement introduced in Junos OS Release 11.1 for the QFX Series.
Statement introduced in Junos OS Release 14.1X53-D20 for the OCX Series.

Description

Associate a scheduler map with a traffic control profile.

Options

map-name—Name of the scheduler map.

Required Privilege Level

interfaces—To view this statement in the configuration.
interface-control—To add this statement to the configuration.

scheduler-maps

Syntax

```
scheduler-maps {
  map-name {
    forwarding-class class-name scheduler scheduler-name;
  }
}
```

Hierarchy Level

```
[edit class-of-service]
```

Release Information

Statement introduced in Junos OS Release 11.1 for the QFX Series.
Statement introduced in Junos OS Release 14.1X53-D20 for the OCX Series.

Description

Specify a scheduler map name to map a scheduler configuration to a forwarding class.

Options

map-name—Name of the scheduler map.

The remaining statements are explained separately. See CLI Explorer.

Required Privilege Level

interfaces—To view this statement in the configuration.
interface-control—To add this statement to the configuration.

Copyright © 2018, Juniper Networks, Inc.

schedulers

List of Syntax

QFX5100, EX4600, QFX3500, and QFX3600, Switches, QFabric Systems on page 691
QFX10000 Switches on page 691

QFX5100, EX4600, QFX3500, and QFX3600, Switches, QFabric Systems

```
schedulers {
  scheduler-name  {
    buffer-size (percent percentage | remainder);
    drop-profile-map loss-priority (low | medium-high | high) protocol protocol drop-profile
      drop-profile-name;
    explicit-congestion-notification;
    priority priority;
    shaping-rate (rate | percent percentage);
    transmit-rate (percent percentage);
  }
}
```

QFX10000 Switches

```
schedulers {
  scheduler-name  {
    buffer-size (percent percentage | remainder);
    drop-profile-map loss-priority (low | medium-high | high) protocol protocol drop-profile
      drop-profile-name;
    excess-rate;
    explicit-congestion-notification;
    priority priority;
    shaping-rate (rate | percent percentage);
    transmit-rate (percent percentage) <exact>;
  }
}
```

Hierarchy Level

[edit class-of-service]

Release Information

Statement introduced in Junos OS Release 11.1 for the QFX Series.
Statement introduced in Junos OS Release 14.1X53-D20 for the OCX Series.

Description

Specify scheduler name and parameter values such as minimum bandwidth (**transmit-rate**), maximum bandwidth (**shaping-rate**), and priority (**priority**).

Options

scheduler-name —Name of the scheduler.

The remaining statements are explained separately. See CLI Explorer.

Required Privilege Level

interfaces—To view this statement in the configuration.
interface-control—To add this statement to the configuration.

shaping-rate

Syntax

```
shaping-rate (rate | percent percentage);
```

Hierarchy Level

```
[edit class-of-service schedulers scheduler-name],
[edit class-of-service traffic-control-profiles profile-name]
```

NOTE: Only switches that support enhanced transmission selection (ETS) hierarchical scheduling support the **traffic-control-profiles** hierarchy.

Release Information

Statement introduced in Junos OS Release 11.1 for the QFX Series.
Statement introduced in Junos OS Release 14.1X53-D20 for the OCX Series.

Description

Configure the shaping rate. The shaping rate throttles the rate of packet transmission by setting a maximum bandwidth (rate in bits per second) or a maximum percentage of bandwidth for a queue or a forwarding class set. You specify the maximum bandwidth for a queue by using a scheduler map to associate a forwarding class (queue) with a scheduler that has a configured shaping rate.

For ETS configuration, you specify the maximum bandwidth for a forwarding class set by setting the shaping rate for a traffic control profile, then you associate the scheduler map with the traffic control profile, and then you apply the traffic control profile and a forwarding class set to an interface.

For simple port scheduling configuration, you apply the scheduler map directly to an interface (instead of indirectly through the traffic control profile as in ETS).

We recommend that you configure the shaping rate as an absolute maximum usage and not as additional usage beyond the configured transmit rate (the minimum guaranteed bandwidth for a queue) or the configured guaranteed rate (the minimum guaranteed bandwidth for a forwarding class set).

NOTE: When you set the maximum bandwidth (**shaping-rate** value) for a queue or for a priority group at 100 Kbps or less, the traffic shaping behavior is accurate only within +/– 20 percent of the configured **shaping-rate** value.

NOTE: On QFX5200, QFX5100, EX4600, QFX3500, and QFX3600 switches, and on QFabric systems, we recommend that you always apply a shaping rate to strict-high priority queues to prevent them from starving other queues. If you do not apply a shaping rate to limit the amount of bandwidth a

Copyright © 2018, Juniper Networks, Inc.

strict-high priority queue can use, then the strict-high priority queue can use all of the available port bandwidth and starve other queues on the port.

NOTE: On QFX5200 Series switches, a granularity of 64kbps is supported for the shaping rate. Therefore, the shaping rate on queues for 100g interfaces might not be applied correctly.

NOTE: QFX10000 Series switches do not support the shaping-rate statement. However, you can configure the transmit-rate exact option to prevent a queue from consuming more bandwidth than you want the queue to consume.

On QFX10000 Series switches, we recommend that you use the transmit rate to set a limit on the amount of bandwidth that receives strict-high priority treatment on a strict-high priority queue. Traffic up to the transmit rate receives strict-high priority treatment. Traffic in excess of the transmit rate is treated as best-effort traffic that receives the strict-high priority queue excess rate weight of “1”. Do not use a shaping rate to set a maximum bandwidth limit on strict-high priority queues on QFX10000 Series switches.

Default If you do not configure a shaping rate, the default shaping rate is 100 percent (all of the available bandwidth), which is the equivalent of no rate shaping.

Options **percent** ***percentage***—Shaping rate as a percentage of the available interface bandwidth.

Range: 1 through 100 percent

rate—Peak (maximum) rate, in bits per second (bps). You can specify a value in bits per second either as a complete decimal number or as a decimal number followed by the abbreviation k (1000), m (1,000,000), or g (1,000,000,000).

Range: 1000 through 10,000,000,000 bps

Required Privilege Level interfaces—To view this statement in the configuration.
interface-control—To add this statement to the configuration.

Related Documentation

- Example: Configuring CoS Hierarchical Port Scheduling (ETS) on page 198
- Example: Configuring Queue Schedulers on page 169
- *Example: Configuring Queue Schedulers for Port Scheduling*
- Example: Configuring Traffic Control Profiles (Priority Group Scheduling) on page 188
- Understanding CoS Output Queue Schedulers on page 159
- *Understanding CoS Port Schedulers on QFX Switches*
- Understanding CoS Traffic Control Profiles on page 182

traffic-control-profiles

Syntax

```
traffic-control-profiles profile-name {
  guaranteed-rate (rate| percent percentage);
  scheduler-map map-name;
  shaping-rate (rate| percent percentage);
}
```

Hierarchy Level

```
[edit class-of-service]
```

Release Information

Statement introduced in Junos OS Release 11.1 for the QFX Series.
Statement introduced in Junos OS Release 14.1X53-D20 for the OCX Series.

Description

Configure traffic shaping and scheduling profiles for forwarding class sets (priority groups) to implement enhanced transmission selection (ETS) or for logical interfaces.

Options

profile-name—Name of the traffic-control profile. This name is also used to specify an output traffic control profile.

The remaining statements are explained separately. See CLI Explorer.

Required Privilege Level

interfaces—To view this statement in the configuration.
interface-control—To add this statement to the configuration.

Related Documentation

- Example: Configuring CoS Hierarchical Port Scheduling (ETS) on page 198
- Example: Configuring Traffic Control Profiles (Priority Group Scheduling) on page 188
- Example: Configuring Forwarding Class Sets on page 120
- Assigning CoS Components to Interfaces on page 23
- **output-traffic-control-profile on page 686**
- Understanding CoS Traffic Control Profiles on page 182

Copyright © 2018, Juniper Networks, Inc.

transmit-rate

List of Syntax

QFX5100, EX4600, QFX3500, and QFX3600, Switches, QFabric Systems on page 695
QFX10000 Switches on page 695

QFX5100, EX4600, QFX3500, and QFX3600, Switches, QFabric Systems

```
transmit-rate (rate | percent percentage);
```

QFX10000 Switches

```
transmit-rate (rate | percent percentage) <exact>;
```

Hierarchy Level

```
[edit class-of-service schedulers scheduler-name]
```

Release Information

Statement introduced in Junos OS Release 11.1 for the QFX Series.
Statement introduced in Junos OS Release 14.1X53-D20 for the OCX Series.
Exact option introduced in Junos OS Release 15.1X53-D10 for the QFX Series.

Description

On QFX5100, EX4600, QFX3500, and QFX3600 switches, and on QFabric systems, the transmit rate specifies the minimum guaranteed transmission rate or percentage for a queue (forwarding class) scheduler. The queue transmit rate also determines the amount of excess (extra) priority group bandwidth that the queue can share on switches that support enhanced transmission selection (ETS) hierarchical scheduling.

On QFX10000 switches, the transmit rate specifies the minimum guaranteed transmission rate or percentage for a queue (forwarding class) scheduler. The queue transmit rate also determines the amount of excess (extra) port bandwidth the queue can share if you do not explicitly configure an excess rate in the scheduler. The transmit rate also determines the amount of excess (extra) priority group bandwidth that the queue can share on switches that support enhanced transmission selection (ETS) hierarchical scheduling.

On QFX10000 switch strict-high priority queues, the transmit rate limits the amount of traffic the switch treats as strict-high priority traffic. Traffic up to the transmit rate receives strict-high priority treatment. The switch treats traffic that exceeds the transmit rate as best-effort traffic that receives an excess bandwidth sharing weight of “1”; you cannot configure an excess rate on a strict-high priority queue, and unlike queues with other scheduling priorities, the switch does not use the transmit rate to determine extra bandwidth sharing for strict-high priority queues.

CAUTION: We strongly recommend that you configure a transmit rate on strict-high priority queues to limit the amount of traffic the switch treats as strict-high priority traffic on those queues. This is especially important if you configure more than one strict-high priority queue on a port. To prevent a strict-high priority queue from starving the other queues on a port, we

recommend that you always configure a transmit rate, even if you only configure one strict-high priority queue.

NOTE: For ETS, the **transmit-rate** setting works only if you also configure the guaranteed-rate in the traffic control profile that is attached to the forwarding class set to which the queue belongs. If you do not configure the guaranteed rate, the minimum guaranteed rate for individual queues that you set using the **transmit-rate** statement does not work. The sum of all queue transmit rates in a forwarding class set should not exceed the traffic control profile guaranteed rate.

NOTE: On QFX5100, EX4600, QFX3500, and QFX3600 switches, and on QFabric systems, you cannot configure a transmit rate for a strict-high priority queue. Queues (forwarding classes) with a configured transmit rate cannot be included in a forwarding class set that has a strict-high priority queue. To prevent strict-high priority queues from consuming all of the available bandwidth on these switches, we recommend that you configure a shaping rate to set a maximum amount of bandwidth for strict-high priority queues.

NOTE: For transmit rates below 1 Gbps, we recommend that you configure the transmit rate as a percentage instead of as a fixed rate. This is because the system converts fixed rates into percentages and may round small fixed rates to a lower percentage. For example, a fixed rate of 350 Mbps is rounded down to 3 percent instead of 3.5 percent.

Copyright © 2018, Juniper Networks, Inc.

Default On QFX5100, EX4600, QFX3500, and QFX3600 switches, and on QFabric systems, if you do not configure the transmit rate, the default scheduler transmission rate and buffer size percentages for queues 0 through 11 are:

Table 140: Default Transmit Rates for QFX5100, EX4600, QFX3500, and QFX3600 Switches, and QFabric Systems

Queue Number	Default Minimum Guaranteed Bandwidth (Transmit Rate)
0 (best-effort)	5 %
1	0
2	0
3 (fcoe)	35 %
4 (no-loss)	35 %
5	0
6	0
7 (network control)	5 %
8 (mcast)	20 %
9	0
10	0
11	0

NOTE: OCX Series switches do not support lossless transport. The OCX Series default DSCP classifier does not classify traffic into the default lossless fcoe and no-loss forwarding classes. The bandwidth that the default scheduler allocates to the default fcoe and no-loss forwarding classes on other switches is allocated to the default best-effort, network-control, and mcast forwarding classes on OCX Series switches.

On QFX10000 switches, if you do not configure the transmit rate, the default scheduler transmission rate and buffer size percentages for queues 0 through 7 are:

Table 141: Default Transmit Rates for QFX10000 Switches

Queue Number	Default Minimum Guaranteed Bandwidth (Transmit Rate)
0 (best-effort)	15 %
1	0
2	0
3 (fcoe)	35 %
4 (no-loss)	35 %
5	0
6	0
7 (network control)	15 %

Configure schedulers if you want to change the minimum guaranteed bandwidth and other queue characteristics.

Options

rate—Minimum transmission rate for the queue, in bps. You can specify a value in bits-per-second either as a complete decimal number or as a decimal number followed by the abbreviation **k** (1000), m (1,000,000), or **g** (1,000,000,000).

Range: 1000 through 10,000,000,000 bps on 10-Gigabit interfaces, 1000 through 40,000,000,000 bps on 40-Gigabit interfaces.

percent *percentage*—Minimum percentage of transmission capacity allocated to the queue.

Range: 1 through 100 percent

exact—(QFX10000 switches only) Shape queues that are not strict-high priority queues to the transmit rate so that the transmit rate is the maximum bandwidth limit. Traffic that exceeds the exact transmit rate is dropped. You cannot set an excess rate on queues configured as **transmit-rate *(rate | percentage)* exact** because the purpose of setting an exact transmit rate is to set a maximum bandwidth (shaping rate) on the traffic.

NOTE: On QFX10000 switches, oversubscribing all 8 queues configured with the **transmit rate exact** (shaping) statement at the **[edit class-of-service schedulers *scheduler-name*]** hierarchy level might result in less than 100 percent utilization of port bandwidth.

Copyright © 2018, Juniper Networks, Inc.

Required Privilege Level

interfaces—To view this statement in the configuration.
interface-control—To add this statement to the configuration.

Related Documentation

- Example: Configuring CoS Hierarchical Port Scheduling (ETS) on page 198
- Example: Configuring Queue Schedulers on page 169
- *Example: Configuring Queue Schedulers for Port Scheduling*
- Understanding CoS Output Queue Schedulers on page 159
- *Understanding CoS Port Schedulers on QFX Switches*

Copyright © 2018, Juniper Networks, Inc.

CHAPTER 13

Configuration Statements (Interconnect Device Fabric Scheduling)

- forwarding-class-set (Interconnect Device) on page 701
- scheduler (Interconnect Device) on page 702
- scheduler-map-forwarding-class-sets on page 703

forwarding-class-set (Interconnect Device)

Syntax

```
forwarding-class-set fabric-forwarding-class-set-name {
  scheduler scheduler-name;
}
```

Hierarchy Level

[edit class-of-service scheduler-map-forwarding-class-sets *scheduler-map-fcset-name*]

Release Information

Statement introduced in Junos OS Release 13.1R2 for the QFX Series.

Description

Specify an existing fabric forwarding class set to map to a scheduler. The scheduler provides bandwidth and drop profile characteristics for all of the forwarding classes assigned to the forwarding class set.

Options

fabric-fowarding-class-set-name—Name of the fabric forwarding class set.

The remaining statement is explained separately. See CLI Explorer.

Required Privilege Level

interfaces—To view this statement in the configuration.
interface-control—To add this statement to the configuration.

Related Documentation

- Example: Configuring CoS Scheduling Across the QFabric System on page 297
- Understanding CoS Fabric Forwarding Class Sets on page 330
- Understanding CoS Scheduling Across the QFabric System on page 276

scheduler (Interconnect Device)

Syntax

scheduler *scheduler-name*;

Hierarchy Level

[edit class-of-service scheduler-map-forwarding-class-sets *scheduler-map-fcset-name* forwarding-class-set *fabric-forwarding-class-set-name*]

Release Information

Statement introduced in Junos OS Release 13.1R2 for the QFX Series.

Description

Map a scheduler to a fabric forwarding class set using a fabric scheduler map. All of the forwarding classes in the fabric forwarding class set use the mapped scheduler.

Options

scheduler-name—Name of the scheduler to map to the fabric forwarding class set.

Required Privilege Level

interfaces—To view this statement in the configuration.
interface-control—To add this statement to the configuration.

Related Documentation

- Example: Configuring Queue Schedulers on page 169
- Example: Configuring CoS Scheduling Across the QFabric System on page 297
- Understanding CoS Scheduling Across the QFabric System on page 276

Copyright © 2018, Juniper Networks, Inc.

scheduler-map-forwarding-class-sets

Syntax

```
scheduler-map-forwarding-class-sets fabric-scheduler-map-name {
  forwarding-class-set fabric-forwarding-class-set-name scheduler scheduler-name;
}
```

Hierarchy Level

[edit class-of-service]

Release Information

Statement introduced in Junos OS Release 13.1R2 for the QFX Series.

Description

Specify a fabric scheduler map name to map a scheduler configuration to a fabric forwarding class set. All of the forwarding classes in the fabric forwarding class set use the mapped scheduler.

Options

fabric-scheduler-map-name—Name of the fabric scheduler map.

The remaining statements are explained separately. See CLI Explorer.

Required Privilege Level

interfaces—To view this statement in the configuration.
interface-control—To add this statement to the configuration.

Related Documentation

- Configuring CoS Fabric Forwarding Class Set Scheduler Maps (Fabric Scheduler to Fabric FC-Set Mapping) on page 341
- Example: Configuring Queue Schedulers on page 169
- Example: Configuring CoS Scheduling Across the QFabric System on page 297
- Understanding CoS Scheduling Across the QFabric System on page 276

Copyright © 2018, Juniper Networks, Inc.

CHAPTER 14

Configuration Statements (Data Center Bridging and Flow Control)

- application (Application Maps) on page 706
- application (Applications) on page 707
- application-map on page 708
- application-maps on page 709
- applications (Applications) on page 710
- applications (DCBX) on page 711
- cable-length (Congestion Notification) on page 712
- code-point (Input Congestion Notification) on page 713
- code-point (Output Congestion Notification) on page 714
- code-points (Application Maps) on page 715
- configured-flow-control on page 716
- congestion-notification-profile on page 718
- dcbx on page 720
- dcbx-version on page 721
- destination-port (Applications) on page 722
- disable (DCBX) on page 723
- enhanced-transmission-selection on page 724
- ether-type on page 725
- flow-control on page 726
- flow-control-queue (Output Congestion Notification) on page 728
- ieee-802.1 (Input Congestion Notification) on page 729
- ieee-802.1 (Output Congestion Notification) on page 730
- input (Congestion Notification) on page 731
- interface (DCBX) on page 732
- interfaces (Class of Service) on page 733
- mru on page 735

Copyright © 2018, Juniper Networks, Inc.

- output (Congestion Notification) on page 736
- pfc (Input Congestion Notification) on page 737
- policy-options on page 738
- priority-flow-control on page 739
- protocol (Applications) on page 740
- recommendation-tlv on page 741
- rx-buffers on page 742
- tx-buffers on page 744

application (Application Maps)

Syntax

```
application application-name {
  code-points [ aliases ] [ bit-patterns ];
}
```

Hierarchy Level

[edit policy-options application-maps *application-map-name*]

Release Information

Statement introduced in Junos OS Release 12.1 for EX Series switches.
Statement introduced in Junos OS Release 12.1 for the QFX Series.

Description

Add an application to an application map and define the application's code points.

Options

application-name—Name of the application.

The remaining statement is explained separately. See CLI Explorer.

Required Privilege Level

routing—To view this statement in the configuration.
routing-control—To add this statement to the configuration.

Related Documentation

- Configuring an Application Map for DCBX Application Protocol TLV Exchange on page 551
- Example: Configuring DCBX Application Protocol TLV Exchange on page 553
- *Example: Configuring DCBX to Support an iSCSI Application*
- Understanding DCBX Application Protocol TLV Exchange on page 546
- *Understanding DCBX Application Protocol TLV Exchange on EX Series Switches*

Copyright © 2018, Juniper Networks, Inc.

application (Applications)

Syntax

```
application application-name {
  destination-port port-value;
  protocol (tcp | udp);
  ether-type type;
}
```

Hierarchy Level

[edit applications]

Release Information

Statement introduced in Junos OS Release 12.1 for EX Series switches.
Statement introduced in Junos OS Release 12.1 for the QFX Series.

Description

Configure properties to define an application.

Options

application-name—Name of the application.

The remaining statements are explained separately. See CLI Explorer.

Required Privilege Level

interface—To view this statement in the configuration.
interface-control—To add this statement to the configuration.

Related Documentation

- Defining an Application for DCBX Application Protocol TLV Exchange on page 550
- Example: Configuring DCBX Application Protocol TLV Exchange on page 553
- *Example: Configuring DCBX to Support an iSCSI Application*
- Understanding DCBX Application Protocol TLV Exchange on page 546
- *Understanding DCBX Application Protocol TLV Exchange on EX Series Switches*

application-map

Syntax

application-map *application-map-name*;

Hierarchy Level

[edit protocols dcbx interface *interface-name*]

Release Information

Statement introduced in Junos OS Release 12.1 for EX Series switches.
Statement introduced in Junos OS Release 12.1 for the QFX Series.

Description

Specify an application map to apply to an interface.

Options

application-map-name—Name of the application map.

Required Privilege Level

routing—To view this statement in the configuration.
routing-control—To add this statement to the configuration.

Related Documentation

- **show dcbx neighbors on page 991**
- Applying an Application Map to an Interface for DCBX Application Protocol TLV Exchange on page 552
- Example: Configuring DCBX Application Protocol TLV Exchange on page 553
- *Example: Configuring DCBX to Support an iSCSI Application*
- Understanding DCBX Application Protocol TLV Exchange on page 546
- *Understanding DCBX Application Protocol TLV Exchange on EX Series Switches*

Copyright © 2018, Juniper Networks, Inc.

application-maps

Syntax

```
application-maps application-map-name {
  application application-name {
    code-points [ aliases ] [ bit-patterns ];
  }
}
```

Hierarchy Level

[edit policy-options]

Release Information

Statement introduced in Junos OS Release 12.1 for EX Series switches.
Statement introduced in Junos OS Release 12.1 for the QFX Series.

Description

Define an application map by specifying the applications that belong to the application map.

Options

application-map-name—Name of the application map.

The remaining statements are explained separately. See CLI Explorer.

Required Privilege Level

routing—To view this statement in the configuration.
routing-control—To add this statement to the configuration.

Related Documentation

- Configuring an Application Map for DCBX Application Protocol TLV Exchange on page 551
- Example: Configuring DCBX Application Protocol TLV Exchange on page 553
- *Example: Configuring DCBX to Support an iSCSI Application*
- Understanding DCBX Application Protocol TLV Exchange on page 546
- *Understanding DCBX Application Protocol TLV Exchange on EX Series Switches*

applications (Applications)

Syntax

```
applications {
  application application-name {
    destination-port port-value;
    protocol (tcp | udp);
    ether-type type;
  }
}
```

Hierarchy Level

[edit]

Release Information

Statement introduced in Junos OS Release 12.1 for EX Series switches.
Statement introduced in Junos OS Release 12.1 for the QFX Series.

Description

Define applications that DCBX advertises.

Options

The remaining statements are explained separately. See CLI Explorer.

Required Privilege Level

interface—To view this statement in the configuration.
interface-control—To add this statement to the configuration.

Related Documentation

- Defining an Application for DCBX Application Protocol TLV Exchange on page 550
- Example: Configuring DCBX Application Protocol TLV Exchange on page 553
- *Example: Configuring DCBX to Support an iSCSI Application*
- Understanding DCBX Application Protocol TLV Exchange on page 546
- *Understanding DCBX Application Protocol TLV Exchange on EX Series Switches*

Copyright © 2018, Juniper Networks, Inc.

applications (DCBX)

Syntax

```
applications {
  fcoe {
    no-auto-negotiation;
  }
}
```

Hierarchy Level

[edit protocols dcbx interface *interface-name*]

Release Information

Statement introduced in Junos OS Release 11.1 for the QFX Series.
Statement introduced in Junos OS Release 12.1 for the EX Series

Description

Configure Data Center Bridging Capability Exchange protocol (DCBX) applications on an interface.

Options

The remaining statements are explained separately. See CLI Explorer.

Required Privilege Level

routing—To view this statement in the configuration.
routing-control—To add this statement to the configuration.

Related Documentation

-
- show dcbx neighbors on page 991
- Understanding DCB Features and Requirements on page 376

cable-length (Congestion Notification)

Syntax

cable-length *cable-length-value*;

Hierarchy Level

[edit class-of-service congestion-notification-profile *profile-name* input]

Release Information

Statement introduced in Junos OS Release 12.3 for the QFX Series.

Description

Specify the length of the cable between the interface and its peer interface in meters. The system uses the cable length and the maximum receive unit (MRU) to calculate the amount of buffer headroom reserved to support priority-based flow control (PFC). The the shorter the cable length and lower the MRU, the less headroom buffer space is required for PFC.

NOTE: You can also set a maximum transmission unit (MTU) value (the largest packet size the interface sends) for interfaces by including the **mtu** statement at the **[edit interfaces *interface-name*]** hierarchy level.

Default

The default cable length value is 100 meters (approximately 328 feet).

Options

cable-length-value—Length of the cable in meters. (Generally from 1 to 300 meters, but there is no configuration restriction.)

Required Privilege Level

interfaces—To view this statement in the configuration.
interface-control—To add this statement to the configuration.

Related Documentation

- Configuring CoS PFC (Congestion Notification Profiles) on page 429
- Example: Configuring Two or More Lossless FCoE IEEE 802.1p Priorities on Different FCoE Transit Switch Interfaces on page 484
- Understanding CoS Flow Control (Ethernet PAUSE and PFC) on page 414
- Understanding CoS IEEE 802.1p Priorities for Lossless Traffic Flows on page 446

Copyright © 2018, Juniper Networks, Inc.

code-point (Input Congestion Notification)

Syntax

```
code-point [code-point-bits] {
  pfc {
    mru mru-value;
  }
}
```

Hierarchy Level

```
[edit class-of-service congestion-notification-profile profile-name input dscp]
[edit class-of-service congestion-notification-profile profile-name input ieee-802.1]
```

Release Information

Statement introduced in Junos OS Release 11.1 for the QFX Series.
Support for DSCP values introduced in Junos OS Release 17.4R1 for the QFX Series.

Description

Enable priority-based flow control (PFC) on an IEEE 802.1p code point (priority) or a Differentiated Services code point (DSCP) value (to implement DSCP-based PFC at Layer 3).

Use this statement to configure PFC to operate based on an IEEE 802.1p code point in the VLAN-tagged packet header at Layer 2, or on a DSCP value from the Layer 3 IP header to support PFC with untagged traffic.

The **pfc** statement is mandatory when setting this statement.

Options

code-point-bits—Code point bit pattern corresponding to an IEEE 802.1p 3-bit priority value when used in the **ieee-802.1** hierarchy, or a 6-bit DSCP value when used in the **dscp** hierarchy.

The remaining statements are described separately.

Required Privilege Level

interfaces—To view this statement in the configuration.
interface-control—To add this statement to the configuration.

Related Documentation

- Example: Configuring CoS PFC for FCoE Traffic on page 432
- Configuring CoS PFC (Congestion Notification Profiles) on page 429
- Understanding CoS Flow Control (Ethernet PAUSE and PFC) on page 414
- *Understanding PFC Using DSCP at Layer 3 for Untagged Traffic*
- *Configuring DSCP-based PFC for Layer 3 Untagged Traffic*

code-point (Output Congestion Notification)

Syntax

```
code-point [ code-point-bits ] {
  flow-control-queue [ queue | list-of-queues ];
}
```

Hierarchy Level

[edit class-of-service congestion-notification-profile *profile-name* output ieee-802.1]

Release Information

Statement introduced in Junos OS Release 12.3 for the QFX Series.

Description

Specify the IEEE 802.1p code point bits that identify the traffic you want to enable for priority-based flow control (PFC) pause.

Default

By default, IEEE 802.1p priorities 3 and 4 (code points 011 and 100, respectively) are enabled for PFC pause on all Ethernet interfaces. If you explicitly configure priorities to pause and the output queues on which to enable pause, the explicit configuration overrides the default configuration. When you apply an explicit output congestion notification profile to an interface, only the priorities and queues specified in the output congestion notification profile are enabled for pause on that interface.

For example, if you configure an output congestion notification profile that specifies priority 2 (code point 010), then traffic with IEEE 802.1p priority 2 is paused on the configured output queue during periods of congestion. However, traffic with priority 3 and priority 4 is not programmed to pause, because the explicit configuration overwrites the default configuration, and the explicit configuration does not pause priority 3 and priority 4. If you configure an explicit output congestion notification profile, all of the priorities you want to enable for PFC and all of the output queues you want to pause must be explicitly configured.

Options

code-point-bits—3-bit value in decimal form.

The remaining statements are described separately.

Required Privilege Level

interfaces—To view this statement in the configuration.
interface-control—To add this statement to the configuration.

Related Documentation

- Configuring CoS PFC (Congestion Notification Profiles) on page 429
- Example: Configuring Two or More Lossless FCoE IEEE 802.1p Priorities on Different FCoE Transit Switch Interfaces on page 484
- Example: Configuring Two or More Lossless FCoE Priorities on the Same FCoE Transit Switch Interface on page 474
- Example: Configuring Lossless FCoE Traffic When the Converged Ethernet Network Does Not Use IEEE 802.1p Priority 3 for FCoE Traffic (FCoE Transit Switch) on page 465

Copyright © 2018, Juniper Networks, Inc.

- Example: Configuring Lossless IEEE 802.1p Priorities on Ethernet Interfaces for Multiple Applications (FCoE and iSCSI) on page 500
- Understanding CoS IEEE 802.1p Priorities for Lossless Traffic Flows on page 446

code-points (Application Maps)

Syntax

```
code-points [ aliases ] [ bit-patterns ];
```

Hierarchy Level

```
[edit policy-options application-maps application-map-name application application-name]
```

Release Information

Statement introduced in Junos OS Release 12.1 for EX Series switches.
Statement introduced in Junos OS Release 12.1 for the QFX Series.

Description

Define one or more code-point aliases or bit sets for an application.

Options

aliases—Name of the alias or aliases.

bit-patterns—Value of the code-point bits, in decimal form.

Required Privilege Level

routing—To view this statement in the configuration.
routing-control—To add this statement to the configuration.

Related Documentation

- Configuring an Application Map for DCBX Application Protocol TLV Exchange on page 551
- Example: Configuring DCBX Application Protocol TLV Exchange on page 553
- *Example: Configuring DCBX to Support an iSCSI Application*
- Understanding DCBX Application Protocol TLV Exchange on page 546
- *Understanding DCBX Application Protocol TLV Exchange on EX Series Switches*

configured-flow-control

Syntax

```
configured-flow-control {
  rx-buffers (on | off);
  tx-buffers (on | off);
}
```

Hierarchy Level

[edit interfaces *interface-name* ether-options]

Release Information

Statement introduced in Junos OS Release 12.1 for the QFX Series.

Description

Configure Ethernet PAUSE asymmetric flow control on an interface. You can set an interface to generate and send PAUSE messages, and you can set an interface to respond to PAUSE messages sent by the connected peer. You must set both the **rx-buffers** and the **tx-buffers** values when you configure asymmetric flow control.

Use the **flow-control** and **no-flow-control** statements to enable and disable symmetric PAUSE on an interface. Symmetric flow control and asymmetric flow control are mutually exclusive features. If you attempt to configure both, the switch returns a commit error.

NOTE: Ethernet PAUSE temporarily stops transmitting all traffic on a link when the buffers fill to a certain threshold. To temporarily pause traffic on individual “lanes” of traffic (each lane contains the traffic associated with a particular IEEE 802.1p code point, so there can be eight lanes of traffic on a link), use priority-based flow control (PFC) by applying a congestion notification profile to the interface.

Ethernet PAUSE and PFC are mutually exclusive features, so you cannot configure both of them on the same interface. If you attempt to configure both Ethernet PAUSE and PFC on an interface, the switch returns a commit error.

Default

Flow control is disabled. You must explicitly configure Ethernet PAUSE flow control on interfaces.

Options

The remaining statements are explained separately. See CLI Explorer.

Required Privilege Level

interface—To view this statement in the configuration.
interface-control—To add this statement to the configuration.

Related Documentation

- congestion-notification-profile on page 718
- flow-control on page 726

Copyright © 2018, Juniper Networks, Inc.

- Configuring CoS Asymmetric Ethernet PAUSE Flow Control on page 427
- Enabling and Disabling CoS Symmetric Ethernet PAUSE Flow Control on page 426
- Understanding CoS Flow Control (Ethernet PAUSE and PFC) on page 414

congestion-notification-profile

Syntax

```
congestion-notification-profile profile-name {
  input {
    (dscp | ieee-802.1) {
      code-point [code-point-bits] {
        pfc {
          mru mru-value;
        }
      }
    }
    cable-length cable-length-value;
  }
  output {
    ieee-802.1 {
      code-point [code-point-bits] {
        flow-control-queue [queue | list-of-queues];
      }
    }
  }
}
```

Interface Congestion Notification Profile Association

```
congestion-notification-profile profile-name {
```

Hierarchy Level

[edit class-of-service],
[edit class-of-service interfaces *interface-name*]

Release Information

Statement introduced in Junos OS Release 11.1 for the QFX Series.
Support for DSCP values introduced in Junos OS Release 17.4R1 for the QFX Series.

Description

Configure a congestion notification profile to enable priority-based flow control (PFC) on traffic and apply the profile to an interface.

A congestion notification profile can be configured to enable PFC on incoming traffic (**input** stanza) that matches the following:

- A Differentiated Services code point (DSCP) value in the Layer 3 IP header (for traffic that is not VLAN-tagged).
- An IEEE 802.1 code point at Layer 2 in the VLAN header (for VLAN-tagged traffic).

A congestion notification profile can be configured to enable PFC on outgoing traffic (**output** stanza) specified only by an IEEE 802.1 code point at Layer 2 in the VLAN header.

NOTE: You must configure PFC for FCoE traffic. Each interface that carries FCoE traffic should be configured for PFC on the FCoE code point (usually 011).

Copyright © 2018, Juniper Networks, Inc.

There is no limit to the total number of congestion notification profiles you can create. However:

- You can attach a maximum of one congestion notification profile to an interface.
- DSCP-based PFC and IEEE 802.1p PFC cannot be configured under the same congestion notification profile.

NOTE: **Configuring or changing PFC on an interface blocks the entire port until the PFC change is completed. After a PFC change is completed, the port is unblocked and traffic resumes. Blocking the port stops ingress and egress traffic, and causes packet loss on all queues on the port until the port is unblocked.**

Options

profile-name—Name of the congestion notification profile.

The remaining statements are explained separately. Search for a statement in CLI Explorer or click a linked statement in the Syntax section for details.

Required Privilege Level

interface—To view this statement in the configuration.
interface-control—To add this statement to the configuration.

Related Documentation

- Configuring CoS PFC (Congestion Notification Profiles) on page 429
- Example: Configuring CoS PFC for FCoE Traffic on page 432
- Example: Configuring Two or More Lossless FCoE IEEE 802.1p Priorities on Different FCoE Transit Switch Interfaces on page 484
- Example: Configuring Two or More Lossless FCoE Priorities on the Same FCoE Transit Switch Interface on page 474
- Example: Configuring Lossless FCoE Traffic When the Converged Ethernet Network Does Not Use IEEE 802.1p Priority 3 for FCoE Traffic (FCoE Transit Switch) on page 465
- Example: Configuring Lossless IEEE 802.1p Priorities on Ethernet Interfaces for Multiple Applications (FCoE and iSCSI) on page 500
- Understanding CoS Flow Control (Ethernet PAUSE and PFC) on page 414
- Understanding CoS IEEE 802.1p Priorities for Lossless Traffic Flows on page 446
- *Understanding PFC Using DSCP at Layer 3 for Untagged Traffic*
- *Configuring DSCP-based PFC for Layer 3 Untagged Traffic*

dcbx

Syntax

```
dcbx {
  disable;
  interface (interface-name | all) {
    disable;
    application-map application-map-name;
    applications {
      no-auto-negotiation;
    }
    enhanced-transmission-selection {
      no-auto-negotiation;
      no-recommendation-tlv;
      recommendation-tlv {
        no-auto-negotiation;
      }
    }
    dcbx-version (auto-negotiate | ieee-dcbx | dcbx-version-1.01);
    priority-flow-control {
      no-auto-negotiation;
    }
  }
}
```

Hierarchy Level

[edit protocols]

Release Information

Statement introduced in Junos OS Release 11.1 for the QFX Series.
Statement introduced in Junos OS Release 11.3 for EX Series switches.
mode and **recommendation-tlv** statements introduced in Junos OS Release 12.2 for the QFX Series.

Description

Configure DCBX properties. DCBX is an extension of Link Layer Discovery Protocol (LLDP), and LLDP must remain enabled on every interface for which you want to use DCBX. If you attempt to enable DCBX on an interface on which LLDP is disabled, the configuration commit fails.

Options

The remaining statements are explained separately. See CLI Explorer.

Required Privilege Level

routing—To view this statement in the configuration.
routing-control—To add this statement to the configuration.

Related Documentation

- show dcbx neighbors on page 991
- Understanding DCB Features and Requirements on page 376
- Configuring DCBX Autonegotiation on page 543

Copyright © 2018, Juniper Networks, Inc.

dcbx-version

Syntax

```
dcbx-version (auto-negotiate | ieee-dcbx | dcbx-version-1.01);
```

Hierarchy Level

[edit protocols dcbx interface (all | *interface-name*)]

Release Information

Statement introduced in Junos OS Release 12.2 for the QFX Series.

Description

Set the DCBX version for the specified interface or interfaces.

QFX3500 switches come up in IEEE DCBX mode and then autonegotiate with the connected peer to set the DCBX version.

QFabric system Node devices come up using DCBX version 1.01, and then autonegotiate with the connected peer to set the DCBX mode.

Default

The default DCBX mode is autonegotation.

Options

auto-negotiate—Automatically negotiate the DCBX version with the connected peer.

ieee-dcbx—Force the interface to use IEEE DCBX mode, regardless of the peer configuration.

dcbx-version-1.01—Force the interface to use version 1.01 DCBX mode, regardless of the peer configuration.

Required Privilege Level

routing—To view this statement in the configuration.
routing-control—To add this statement to the configuration.

Related Documentation

- show dcbx neighbors on page 991
- Configuring DCBX Autonegotiation on page 543
- Understanding DCBX on page 533

destination-port (Applications)

Syntax

destination-port *port-value*;

Hierarchy Level

[edit applications application *application-name*]

Release Information

Statement introduced in Junos OS Release 12.1 for EX Series switches.
Statement introduced in Junos OS Release 12.1 for the QFX Series.

Description

Transmission Control Protocol (TCP) or User Datagram Protocol (UDP) destination port number, which combines with **protocol** to identify an application type. The Internet Assigned Numbers Authority (IANA) assigns port numbers. See the IANA *Service Name and Transport Protocol Port Number Registry* at http://www.iana.org/assignments/service-names-port-numbers/service-names-port-numbers.xml for a list of assigned port numbers.

NOTE: To create an application for iSCSI, use the protocol **tcp** with the destination port number **3260**.

Options

port-value—Identifier for the port.

Required Privilege Level

interface—To view this statement in the configuration.
interface-control—To add this statement to the configuration.

Related Documentation

- Defining an Application for DCBX Application Protocol TLV Exchange on page 550
- Example: Configuring DCBX Application Protocol TLV Exchange on page 553
- *Example: Configuring DCBX to Support an iSCSI Application*
- Understanding DCBX Application Protocol TLV Exchange on page 546
- *Understanding DCBX Application Protocol TLV Exchange on EX Series Switches*

Copyright © 2018, Juniper Networks, Inc.

disable (DCBX)

Syntax

```
disable
```

Hierarchy Level

[edit protocols dcbx]
[edit protocols dcbx interface *interface-name*]

Release Information

Statement introduced in Junos OS Release 11.1 for the QFX Series.
Statement introduced in Junos OS Release 11.3 for EX Series switches.

Description

Disable Data Center Bridging Capability Exchange protocol (DCBX) on one or more 10-Gigabit Ethernet interfaces.

Default

DCBX is enabled by default on all 10-Gigabit or higher Ethernet interfaces.

DCBX is enabled by default on all 10-Gigabit Ethernet interfaces on EX4500 CEE-enabled switches.

Required Privilege Level

routing—To view this statement in the configuration.
routing-control—To add this statement to the configuration.

Related Documentation

- Configuring DCBX Autonegotiation on page 543
- *Disabling DCBX to Disable PFC Autonegotiation on EX Series Switches (CLI Procedure)*
- Understanding DCB Features and Requirements on page 376
- *Understanding DCB Features and Requirements on EX Series Switches*

enhanced-transmission-selection

Syntax

```
enhanced-transmission-selection {
   no-auto-negotiation;
   no-recommendation-tlv;
   recommendation-tlv {
      no-auto-negotiation;
   }
}
```

Hierarchy Level

[edit protocols dcbx interface *interface-name*]

Release Information

Statement introduced in Junos OS Release 11.1 for the QFX Series.

Description

Disable advertising the enhanced transmission selection (ETS) state of the interface to the peer. To disable ETS on the interface, do not enable ETS on the interface in the class-of-service (CoS) configuration.

Disabling ETS autonegotiation stops the QFX Series from advertising the ETS Configuration TLV and the ETS Recommendation TLV.

Disabling the ETS recommendation TLV stops the QFX Series from advertising the ETS Recommendation TLV, but the ETS Configuration TLV is still advertised.

Options

no-auto-negotiation—Disable automatic negotiation of ETS (Configuration TLV and Recommendation TLV)

no-recommendation-tlv—Disable automatic negotiation of the ETS Recommendation TLV

recommendation-tlv—Enable automatic negotiation of ETS Recommendation TLV

Required Privilege Level

routing—To view this statement in the configuration.
routing-control—To add this statement to the configuration.

Related Documentation

- show dcbx neighbors on page 991
- Configuring DCBX Autonegotiation on page 543
- Example: Configuring CoS Hierarchical Port Scheduling (ETS) on page 198
- Understanding DCB Features and Requirements on page 376

Copyright © 2018, Juniper Networks, Inc.

ether-type

Syntax

```
ether-type ether-type;
```

Hierarchy Level

[edit applications application *application-name*]

Release Information

Statement introduced in Junos OS Release 12.1 for EX Series switches.
Statement introduced in Junos OS Release 12.1 for the QFX Series.

Description

Two-octet field in an Ethernet frame that defines the protocol encapsulated in the frame payload. See http://standards.ieee.org/develop/regauth/ethertype/eth.txt for a list of Institute of Electrical and Electronics Engineers (IEEE) EtherTypes.

NOTE: **To create a FIP application, use the EtherType 0x8914.**

Options

type—Identifier for the EtherType.

Required Privilege Level

interface—To view this statement in the configuration.
interface-control—To add this statement to the configuration.

Related Documentation

- Defining an Application for DCBX Application Protocol TLV Exchange on page 550
- Example: Configuring DCBX Application Protocol TLV Exchange on page 553
- Understanding DCBX Application Protocol TLV Exchange on page 546

flow-control

Syntax

```
(flow-control | no-flow-control);
```

Hierarchy Level

[edit interfaces *interface-name* ether-options]

Release Information

Statement introduced in Junos OS Release 11.1 for the QFX Series.
Statement introduced in Junos OS Release 14.1X53-D20 for the OCX Series.

Description

Explicitly enable or disable symmetric Ethernet PAUSE flow control, which regulates the flow of packets from the switch to the remote side of the connection by pausing all traffic flows on a link during periods of network congestion. Symmetric flow control means that Ethernet PAUSE is enabled in both directions. The interface generates and sends Ethernet PAUSE messages when the receive buffers fill to a certain threshold and the interface responds to PAUSE messages received from the connected peer. By default, flow control is disabled.

You can configure asymmetric flow control by including the **configured-flow-control** statement at the **[edit interfaces *interface-name* ether-options** hierarchy level. Symmetric flow control and asymmetric flow control are mutually exclusive features. If you attempt to configure both, the switch returns a commit error.

NOTE: Ethernet PAUSE temporarily stops transmitting all traffic on a link when the buffers fill to a certain threshold. To temporarily pause traffic on individual “lanes” of traffic (each lane contains the traffic associated with a particular IEEE 802.1p code point, so there can be eight lanes of traffic on a link), use priority-based flow control (PFC).

Ethernet PAUSE and PFC are mutually exclusive features, so you cannot configure both of them on the same interface. If you attempt to configure both Ethernet PAUSE and PFC on an interface, the switch returns a commit error.

OCX Series switches do not support PFC.

- **flow-control**—Enable flow control; flow control is useful when the remote device is a Gigabit Ethernet switch.
- **no-flow-control**—Disable flow control.

Default

Flow control is disabled.

Required Privilege Level

interface—To view this statement in the configuration.
interface-control—To add this statement to the configuration.

Copyright © 2018, Juniper Networks, Inc.

Related Documentation

- configured-flow-control on page 716
- *Configuring Gigabit and 10-Gigabit Ethernet Interfaces for EX4600 and QFX Series Switches*
- Understanding CoS Flow Control (Ethernet PAUSE and PFC) on page 414
- *Junos OS Network Interfaces Library for Routing Devices*

flow-control-queue (Output Congestion Notification)

Syntax

```
flow-control-queue [ queue | list-of-queues ];
```

Hierarchy Level

```
[edit class-of-service congestion-notification-profile profile-name output ieee-802.1
  code-point code-point-bits]
```

Release Information

Statement introduced in Junos OS Release 12.3 for the QFX Series.

Description

Specify one or more output queues to pause, to support priority-based flow control (PFC). The specified queues pause when the interface receives a PFC frame with a matching IEEE 802.1p code point.

Default

Queue 3 (mapped to the fcoe forwarding class) and queue 4 (mapped to the no-loss forwarding class) are programmed as flow control queues to pause. No other output queues are programmed to pause by default.

If you configure flow control queues explicitly, only the queues that you specify are programmed to pause. The explicit flow control queue to pause configuration overrides the default setting, so the queues paused in the default configuration are no longer paused by default.

For example, if you configure queue 2 as a flow control queue, then queue 2 pauses when congestion occurs, but queues 3 and 4 do not pause because they were not explicitly specified. To enable pause on output queues 2, 3, and 4, you must explicitly configure all three of the queues as flow control queues.

The same behavior applies to the IEEE 802.1p code points (priorities) on which PFC is enabled. By default, priorities 3 (011) and 4 (100) are enabled for PFC pause. If you explicitly configure flow control queues to pause, you must also explicitly configure pause for each priority (code point) that you want to pause, because the explicit configuration overrides the default configuration.

Options

[***queue*** | ***list-of-queues***]—The output queue or a list of output queues to pause.

Required Privilege Level

interfaces—To view this statement in the configuration.
interface-control—To add this statement to the configuration.

Related Documentation

- Configuring CoS PFC (Congestion Notification Profiles) on page 429
- Example: Configuring Two or More Lossless FCoE IEEE 802.1p Priorities on Different FCoE Transit Switch Interfaces on page 484
- Example: Configuring Two or More Lossless FCoE Priorities on the Same FCoE Transit Switch Interface on page 474

Copyright © 2018, Juniper Networks, Inc.

- Example: Configuring Lossless FCoE Traffic When the Converged Ethernet Network Does Not Use IEEE 802.1p Priority 3 for FCoE Traffic (FCoE Transit Switch) on page 465
- Example: Configuring Lossless IEEE 802.1p Priorities on Ethernet Interfaces for Multiple Applications (FCoE and iSCSI) on page 500
- Understanding CoS IEEE 802.1p Priorities for Lossless Traffic Flows on page 446

ieee-802.1 (Input Congestion Notification)

Syntax

```
ieee-802.1 {
  code-point [code-point-bits] {
    pfc {
      mru mru-value;
    }
  }
}
```

Hierarchy Level

[edit class-of-service congestion-notification-profile *profile-name* input]

Release Information

Statement introduced in Junos OS Release 11.1 for the QFX Series.

Description

Configure an IEEE 802.1 code point and apply priority-based flow control (PFC) to packets with that code point.

Options

The statements are described separately.

Required Privilege Level

interface—To view this statement in the configuration.
interface-control—To add this statement to the configuration.

Related Documentation

- Example: Configuring CoS PFC for FCoE Traffic on page 432
- Configuring CoS PFC (Congestion Notification Profiles) on page 429
- Understanding CoS Flow Control (Ethernet PAUSE and PFC) on page 414

ieee-802.1 (Output Congestion Notification)

Syntax

```
ieee-802.1 {
  code-point [ code-point-bits ] {
    flow-control-queue [ queue | list-of-queues ];
  }
}
```

Hierarchy Level

[edit class-of-service congestion-notification-profile *profile-name* output]

Release Information

Statement introduced in Junos OS Release 12.3 for the QFX Series.

Description

Configure an IEEE 802.1 code point and apply priority-based flow control (PFC) to packets with that code point on output queues.

Options

The statements are described separately.

Required Privilege Level

interface—To view this statement in the configuration.
interface-control—To add this statement to the configuration.

Related Documentation

- Configuring CoS PFC (Congestion Notification Profiles) on page 429
- Example: Configuring Two or More Lossless FCoE IEEE 802.1p Priorities on Different FCoE Transit Switch Interfaces on page 484
- Example: Configuring Two or More Lossless FCoE Priorities on the Same FCoE Transit Switch Interface on page 474
- Example: Configuring Lossless FCoE Traffic When the Converged Ethernet Network Does Not Use IEEE 802.1p Priority 3 for FCoE Traffic (FCoE Transit Switch) on page 465
- Example: Configuring Lossless IEEE 802.1p Priorities on Ethernet Interfaces for Multiple Applications (FCoE and iSCSI) on page 500
- Understanding CoS IEEE 802.1p Priorities for Lossless Traffic Flows on page 446

Copyright © 2018, Juniper Networks, Inc.

input (Congestion Notification)

Syntax

```
input {
  (dscp | ieee-802.1) {
    code-point [code-point-bits] {
      pfc {
        mru mru-value;
      }
    }
  }
  cable-length cable-length-value;
}
```

Hierarchy Level

[edit class-of-service congestion-notification-profile *profile-name*]

Release Information

Statement introduced in Junos OS Release 11.1 for the QFX Series.
Support for DSCP values introduced in Junos OS Release 17.4R1 for the QFX Series.

Description

Configure priority-based flow control (PFC) on incoming traffic based on either IEEE 802.1p priorities in the Layer 2 VLAN header or Differentiated Services code point (DSCP) values in the Layer 3 IP header.

DSCP-based PFC and IEEE 802.1p PFC cannot be configured under the same congestion notification profile.

Options

The remaining statements are explained separately. Search for a statement in CLI Explorer or click a linked statement in the Syntax section for details.

Required Privilege Level

interface—To view this statement in the configuration.
interface-control—To add this statement to the configuration.

Related Documentation

- Example: Configuring CoS PFC for FCoE Traffic on page 432
- Configuring CoS PFC (Congestion Notification Profiles) on page 429
- Understanding CoS Flow Control (Ethernet PAUSE and PFC) on page 414
- *Understanding PFC Using DSCP at Layer 3 for Untagged Traffic*
- *Configuring DSCP-based PFC for Layer 3 Untagged Traffic*

interface (DCBX)

Syntax

```
interface (interface-name | all) {
  disable;
  application-map application-map-name;
  applications {
    no-auto-negotiation;
  }
  enhanced-transmission-selection {
    no-auto-negotiation;
    no-recommendation-tlv;
    recommendation-tlv {
      no-auto-negotiation;
    }
  }
  dcbx-version (auto-negotiate | ieee-dcbx | dcbx-version-1.01);
  priority-flow-control {
    no-auto-negotiation;
  }
}
```

Hierarchy Level

[edit protocols dcbx]

Release Information

Statement introduced in Junos OS Release 11.1 for the QFX Series.
Statement introduced in Junos OS Release 11.3 for the EX Series switches.
Mode and **recommendation-tlv** statements introduced in Junos OS Release 12.2 for the QFX Series.

Description

Configure DCBX properties on an interface.

Options

interface-name—Name of the interface.

The remaining statements are explained separately. See CLI Explorer.

Required Privilege Level

routing—To view this statement in the configuration.
routing-control—To add this statement to the configuration.

Related Documentation

- show dcbx neighbors on page 991
- Configuring DCBX Autonegotiation on page 543
- *Example: Configuring DCBX to Support an iSCSI Application*
- Understanding DCB Features and Requirements on page 376
- *Understanding DCB Features and Requirements on EX Series Switches*
- *Understanding DCBX Application Protocol TLV Exchange on EX Series Switches*

Copyright © 2018, Juniper Networks, Inc.

interfaces (Class of Service)

Syntax

```
interfaces {
interface-name  {
  congestion-notification-profile profile-name {
  }
  forwarding-class forwarding-class-name;
  forwarding-class-set forwarding-class-set-name {
    output-traffic-control-profile profile-name;
  }
  rewrite-value {
    input {
      ieee-802.1{
        code-point code-point-bits;
      }
    }
  }
  scheduler-map scheduler-map-name
  unit logical-unit-number {
    classifiers {
      (dscp | dscp-ipv6 | ieee-802.1 | exp) (classifier-name | default);
    }
    forwarding-class class-name;
    rewrite-rules {
      (dscp | dscp-ipv6 | ieee-802.1 | exp) (classifier-name | default);
    }
  }
}
```

Hierarchy Level

[edit class-of-service]

Release Information

Statement introduced in Junos OS Release 11.1 for the QFX Series.
Statement introduced in Junos OS Release 14.1X53-D20 for the OCX Series

Description

Configure interface-specific CoS properties for incoming packets.

NOTE: Only switches that support direct port scheduling also support applying a scheduler map directly to an interface. When using enhanced transmission selection (ETS) hierarchical port scheduling, you cannot apply a scheduler map directly to an interface; instead, you associate the scheduler map with a traffic control profile and apply the traffic control profile to the interface.

NOTE: Only switches that support native Fibre Channel interfaces support the rewrite-value statement, which enables you to rewrite the IEEE 802.1p code points on native Fibre Channel interfaces.

NOTE: OCX Series switches do not support MPLS, so they do not support EXP classifiers or rewrite rules. OCX Series switches do not support the congestion-notification-profile configuration statement, which applies priority-based flow control (PFC) to interface output queues.

Options

interface-name—Name of the interface.

The remaining statements are explained separately. See CLI Explorer.

Required Privilege Level

interfaces—To view this statement in the configuration.
interface-control—To add this statement to the configuration.

Related Documentation

- Assigning CoS Components to Interfaces on page 23
- *Interfaces Overview for Switches*

Copyright © 2018, Juniper Networks, Inc.

mru

Syntax

```
mru mru-value;
```

Hierarchy Level

```
[edit class-of-service congestion-notification-profile profile-name input dscp code-point
  code-point-bits pfc]
[edit class-of-service congestion-notification-profile profile-name input ieee-802.1 code-point
  code-point-bits pfc]
```

Release Information

Statement introduced in Junos OS Release 12.3 for the QFX Series.
Support added in **dscp** statement hierarchy in Junos OS Release 17.4R1 for the QFX Series.

Description

Configure the maximum receive unit (MRU) of the interface in bytes. The system uses the MRU and the cable length to calculate the amount of buffer headroom reserved to support priority-based flow control (PFC). The lower the MRU and the shorter the cable length, the less headroom buffer space is required for PFC.

NOTE: You can also set a maximum transmission unit (MTU) value (the largest packet size the interface sends) for interfaces by including the **mtu** statement at the **[edit interfaces** *interface-name*] hierarchy level.

Default

For priority 3 traffic, the default MRU value is 2500 bytes.

For priority 4 traffic, the default MRU value is 9216 bytes.

For user-configured priorities, the default MRU value is 2500 bytes.

Options

mru-value—Value of the maximum packet receive unit size in bytes (generally from 1500 to 9216 bytes, but there is no configuration restriction).

Required Privilege Level

interfaces—To view this statement in the configuration.
interface-control—To add this statement to the configuration.

Related Documentation

- Configuring CoS PFC (Congestion Notification Profiles) on page 429
- Example: Configuring Two or More Lossless FCoE IEEE 802.1p Priorities on Different FCoE Transit Switch Interfaces on page 484
- Example: Configuring Two or More Lossless FCoE Priorities on the Same FCoE Transit Switch Interface on page 474
- Example: Configuring Lossless FCoE Traffic When the Converged Ethernet Network Does Not Use IEEE 802.1p Priority 3 for FCoE Traffic (FCoE Transit Switch) on page 465

Copyright © 2018, Juniper Networks, Inc.

- Example: Configuring Lossless IEEE 802.1p Priorities on Ethernet Interfaces for Multiple Applications (FCoE and iSCSI) on page 500
- Understanding CoS Flow Control (Ethernet PAUSE and PFC) on page 414
- Understanding CoS IEEE 802.1p Priorities for Lossless Traffic Flows on page 446
- *Understanding PFC Using DSCP at Layer 3 for Untagged Traffic*
- *Configuring DSCP-based PFC for Layer 3 Untagged Traffic*

output (Congestion Notification)

Syntax

```
output {
  ieee-802.1 {
    code-point [code-point-bits] {
      flow-control-queue [queue | list-of-queues];
    }
  }
}
```

Hierarchy Level

[edit class-of-service congestion-notification-profile *profile-name*]

Release Information

Statement introduced in Junos OS Release 12.3 for the QFX Series.

Description

Configure priority-based flow control (PFC) on output queues.

Options

The remaining statements are explained separately. See CLI Explorer.

Required Privilege Level

interface—To view this statement in the configuration.
interface-control—To add this statement to the configuration.

Related Documentation

- Configuring CoS PFC (Congestion Notification Profiles) on page 429
- Example: Configuring Two or More Lossless FCoE IEEE 802.1p Priorities on Different FCoE Transit Switch Interfaces on page 484
- Example: Configuring Two or More Lossless FCoE Priorities on the Same FCoE Transit Switch Interface on page 474
- Example: Configuring Lossless FCoE Traffic When the Converged Ethernet Network Does Not Use IEEE 802.1p Priority 3 for FCoE Traffic (FCoE Transit Switch) on page 465
- Example: Configuring Lossless IEEE 802.1p Priorities on Ethernet Interfaces for Multiple Applications (FCoE and iSCSI) on page 500
- Understanding CoS IEEE 802.1p Priorities for Lossless Traffic Flows on page 446

Copyright © 2018, Juniper Networks, Inc.

pfc (Input Congestion Notification)

Syntax

```
pfc {
   mru mru-value;
}
```

Hierarchy Level

```
[edit class-of-service congestion-notification-profile profile-name input dscp code-point
   code-point-bits]
[edit class-of-service congestion-notification-profile profile-name input ieee-802.1 code-point
   code-point-bits]
```

Release Information

Statement introduced in Junos OS Release 12.3 for the QFX Series.
Support for DSCP-based PFC introduced in Junos OS Release 17.4R1 for the QFX Series.

Description

Enable and configure ingress interface priority-based flow control (PFC) for a configured IEEE 802.1p code point in the VLAN-tagged packet header at Layer 2, or on a DSCP value from the Layer 3 IP header to support PFC with untagged traffic.

Options

The remaining statements are explained separately. Search for a statement in CLI Explorer or click a linked statement in the Syntax section for details.

Required Privilege Level

interfaces—To view this statement in the configuration.
interface-control—To add this statement to the configuration.

Related Documentation

- Configuring CoS PFC (Congestion Notification Profiles) on page 429
- Example: Configuring Two or More Lossless FCoE IEEE 802.1p Priorities on Different FCoE Transit Switch Interfaces on page 484
- Example: Configuring Two or More Lossless FCoE Priorities on the Same FCoE Transit Switch Interface on page 474
- Example: Configuring Lossless FCoE Traffic When the Converged Ethernet Network Does Not Use IEEE 802.1p Priority 3 for FCoE Traffic (FCoE Transit Switch) on page 465
- Example: Configuring Lossless IEEE 802.1p Priorities on Ethernet Interfaces for Multiple Applications (FCoE and iSCSI) on page 500
- Understanding CoS Flow Control (Ethernet PAUSE and PFC) on page 414
- Understanding CoS IEEE 802.1p Priorities for Lossless Traffic Flows on page 446
- *Understanding PFC Using DSCP at Layer 3 for Untagged Traffic*
- *Configuring DSCP-based PFC for Layer 3 Untagged Traffic*

policy-options

Syntax

```
policy-options
  application-maps application-map-name {
    application application-name {
      code-points [ aliases ] [ bit-patterns ];
    }
  }
  policy-statement policy-name {
    term term-name {
      from {
        family family-name;
        match-conditions;
        policy subroutine-policy-name;
        prefix-list prefix-list-name;
        prefix-list-filter prefix-list-name match-type <actions>;
        route-filter destination-prefix match-type <actions>;
        source-address-filter source-prefix match-type <actions>;
      }
      to {
        match-conditions;
        policy subroutine-policy-name;
      }
      then actions;
    }
  }
```

Hierarchy Level

[edit]

Release Information

Statement introduced in Junos OS Release 12.1 for the QFX Series.
Statement introduced in Junos OS Release 12.1 for the EX Series.
Statement introduced in Junos OS Release 14.1X53-D20 for the OCX Series.

Description

Configure options such as application maps for DCBX application protocol exchange and policy statements.

Required Privilege Level

storage—To view this statement in the configuration.
storage-control—To add this statement to the configuration.

Related Documentation

- Defining an Application for DCBX Application Protocol TLV Exchange on page 550
- Example: Configuring DCBX Application Protocol TLV Exchange on page 553
- *Example: Configuring DCBX to Support an iSCSI Application*
- Understanding DCBX Application Protocol TLV Exchange on page 546
- *Understanding DCBX Application Protocol TLV Exchange on EX Series Switches*

Copyright © 2018, Juniper Networks, Inc.

priority-flow-control

Syntax

```
priority-flow-control {
   no-auto-negotiation;
}
```

Hierarchy Level

[edit protocols dcbx interface (all | *interface-name*)]

Release Information

Statement introduced in Junos OS Release 11.1 for the QFX Series.
Statement introduced in Junos OS Release 11.3 for EX Series switches.

Description

Disable autonegotiation of priority-based flow control (PFC) on one or more Ethernet interfaces. Autonegotiation enables PFC on an interface only if the switch and the peer device connected to the switch both support PFC and have the same PFC configuration. Disabling autonegotiation on an interface forces the interface to use the PFC state (enabled or disabled) that is configured on the switch by the configuration and assignment of the congestion notification profile.

Options

no-auto-negotiation—Disable automatic negotiation of PFC.

Required Privilege Level

routing—To view this statement in the configuration.
routing-control—To add this statement to the configuration.

Related Documentation

- show dcbx neighbors on page 991
- Configuring CoS PFC (Congestion Notification Profiles) on page 429
- *Configuring Priority-Based Flow Control for an EX Series Switch (CLI Procedure)*
- Configuring DCBX Autonegotiation on page 543
- Example: Configuring CoS PFC for FCoE Traffic on page 432
- *Understanding Data Center Bridging Capability Exchange Protocol for EX Series Switches*
- *Understanding Priority-Based Flow Control*
- Understanding DCB Features and Requirements on page 376

Copyright © 2018, Juniper Networks, Inc.

protocol (Applications)

Syntax

```
protocol (tcp | udp);
```

Hierarchy Level

[edit applications application *application-name*]

Release Information

Statement introduced in Junos OS Release 12.1 for EX Series switches.
Statement introduced in Junos OS Release 12.1 for the QFX Series.

Description

Networking protocol type, which combines with **destination-port** to identify an application type.

NOTE: To create an application for iSCSI, use the protocol **tcp** with the destination port number **3260**.

Options

tcp—Transmission Control Protocol

udp—User Datagram Protocol

Required Privilege Level

interface—To view this statement in the configuration.
interface-control—To add this statement to the configuration.

Related Documentation

- Defining an Application for DCBX Application Protocol TLV Exchange on page 550
- Example: Configuring DCBX Application Protocol TLV Exchange on page 553
- *Example: Configuring DCBX to Support an iSCSI Application*
- Understanding DCBX Application Protocol TLV Exchange on page 546
- *Understanding DCBX Application Protocol TLV Exchange on EX Series Switches*

Copyright © 2018, Juniper Networks, Inc.

recommendation-tlv

Syntax

```
recommendation-tlv {
   no-auto-negotiation;
}
```

Hierarchy Level

[edit protocols dcbx interface *interface-name* enhanced-transmission-selection]

Release Information

Statement introduced in Junos OS Release 12.2 for the QFX Series.

Description

Enable DCBX to send the ETS Recommendation TLV (also known as the Information TLV) on egress. This feature is valid only if the interface DCBX mode is IEEE DCBX. If the interface DCBX mode is DCBX version 1.01, this statement has no effect. (DCBX version 1.01 does not advertise separate TLVs for individual attributes.)

Default

DCBX-enabled interfaces send the ETS recommendation TLV unless it is disabled.

Options

no-auto-negotiation—Disable sending of the ETS recommendation TLV.

Required Privilege Level

routing—To view this statement in the configuration.
routing-control—To add this statement to the configuration.

Related Documentation

- show dcbx neighbors on page 991
- Configuring DCBX Autonegotiation on page 543

rx-buffers

Syntax

```
rx-buffers (on | off);
```

Hierarchy Level

[edit interfaces *interface-name* ether-options configured-flow-control]

Release Information

Statement introduced in Junos OS Release 12.1 for the QFX Series.

Description

Enable or disable an interface to generate and send Ethernet PAUSE messages. If you enable the receive buffers to generate and send PAUSE messages, when the receive buffers reach a certain level of fullness, the interface sends a PAUSE message to the connected peer. If the connected peer is properly configured, it stops transmitting frames to the interface on the entire link. When the interface receive buffer empties below a certain threshold, the interface sends a message to the connected peer to resume sending frames.

Ethernet PAUSE prevents buffers from overflowing and dropping packets during periods of network congestion. If the other devices in the network are also configured to support PAUSE, PAUSE supports lossless operation. Use the **rx-buffers** statement with the **tx-buffers** statement to configure asymmetric Ethernet PAUSE on an interface. (Use the **flow-control** statement to enable symmetric PAUSE and the **no-flow-control** statement to disable symmetric PAUSE on an interface. Symmetric flow control and asymmetric flow control are mutually exclusive features. If you attempt to configure both, the switch returns a commit error.)

NOTE: Ethernet PAUSE temporarily stops transmitting all traffic on a link when the buffers fill to a certain threshold. To temporarily pause traffic on individual “lanes” of traffic (each lane contains the traffic associated with a particular IEEE 802.1p code point, so there can be eight lanes of traffic on a link), use priority-based flow control (PFC).

Ethernet PAUSE and PFC are mutually exclusive features, so you cannot configure both of them on the same interface. If you attempt to configure both Ethernet PAUSE and PFC on an interface, the switch returns a commit error.

Default

Flow control is disabled. You must explicitly configure Ethernet PAUSE flow control on interfaces.

Options

on | off—Enable or disable an interface to generate and send Ethernet PAUSE messages.

Copyright © 2018, Juniper Networks, Inc.

Required Privilege Level

interface—To view this statement in the configuration.
interface-control—To add this statement to the configuration.

Related Documentation

- flow-control on page 726
- tx-buffers on page 744
- Configuring CoS Asymmetric Ethernet PAUSE Flow Control on page 427
- Enabling and Disabling CoS Symmetric Ethernet PAUSE Flow Control on page 426
- Understanding CoS Flow Control (Ethernet PAUSE and PFC) on page 414

tx-buffers

Syntax

```
tx-buffers (on | off);
```

Hierarchy Level

[edit interfaces *interface-name* ether-options configured-flow-control]

Release Information

Statement introduced in Junos OS Release 12.1 for the QFX Series.

Description

Enable or disable an interface to respond to received Ethernet PAUSE messages. If you enable the transmit buffers to respond to PAUSE messages, when the interface receives a PAUSE message from the connected peer, the interface stops transmitting frames on the entire link. When the receive buffer on the connected peer empties below a certain threshold, the peer interface sends a message to the paused interface to resume sending frames.

Ethernet PAUSE prevents buffers from overflowing and dropping packets during periods of network congestion. If the other devices in the network are also configured to support PAUSE, PAUSE supports lossless operation. Use the **tx-buffers** statement with the **rx-buffers** statement to configure asymmetric Ethernet PAUSE on an interface. (Use the **flow-control** statement to enable symmetric PAUSE and the **no-flow-control** statement to disable symmetric PAUSE on an interface. Symmetric flow control and asymmetric flow control are mutually exclusive features. If you attempt to configure both, the switch returns a commit error.)

NOTE: Ethernet PAUSE temporarily stops transmitting all traffic on a link when the buffers fill to a certain threshold. To temporarily pause traffic on individual “lanes” of traffic (each lane contains the traffic associated with a particular IEEE 802.1p code point, so there can be eight lanes of traffic on a link), use priority-based flow control (PFC).

Ethernet PAUSE and PFC are mutually exclusive features, so you cannot configure both of them on the same interface. If you attempt to configure both Ethernet PAUSE and PFC on an interface, the switch returns a commit error.

Default

Flow control is disabled. You must explicitly configure Ethernet PAUSE flow control on interfaces.

Options

on | off—Enable or disable an interface to respond to an Ethernet PAUSE message.

Required Privilege Level

interface—To view this statement in the configuration.
interface-control—To add this statement to the configuration.

Copyright © 2018, Juniper Networks, Inc.

Related Documentation

- flow-control on page 726
- rx-buffers on page 742
- Configuring CoS Asymmetric Ethernet PAUSE Flow Control on page 427
- Enabling and Disabling CoS Symmetric Ethernet PAUSE Flow Control on page 426
- Understanding CoS Flow Control (Ethernet PAUSE and PFC) on page 414

Copyright © 2018, Juniper Networks, Inc.

CHAPTER 15

Configuration Statements (Buffers)

- buffer-partition (Egress) on page 748
- buffer-partition (Ingress) on page 750
- buffer-size on page 752
- egress (Buffer Configuration) on page 757
- ingress (Buffer Configuration) on page 759
- shared-buffer on page 761

buffer-partition (Egress)

Syntax

```
buffer-partition (lossless | lossy | multicast) {
   percent percent;
}
```

Hierarchy Level

[edit class-of-service shared-buffer egress]

Release Information

Statement introduced in Junos OS Release 12.3 for the QFX Series.
Statement introduced in Junos OS Release 14.1X53-D20 for the OCX Series.

Description

The egress shared buffer pool is divided into three partitions. Each partition reserves a percentage of the available shared buffer pool for a type of traffic, so that the switch provides enough resources to support a mix of best-effort, lossless, and multicast traffic (multicast also includes broadcast and destination lookup fail traffic). To better support the mix of traffic on your network, you can optimize the allocation of egress shared buffers to different types of traffic by fine-tuning the shared buffer partitions.

NOTE: **OCX Series switches do not support lossless transport.**

The percentages you configure for the three egress shared buffer partitions must total exactly 100 percent. If the total of the three shared buffer percentages is not 100 percent, the system returns a commit error and does not commit the configuration. You can configure any partition to 0 (zero) percent as long as the allocation to other partitions totals 100 percent.

This is a global allocation that applies to all ports. All ports on the switch receive the same allocation of egress shared buffers.

If you do not configure buffer partitions, the switch uses the default partitioning.

CAUTION: **Changing the buffer configuration is a disruptive event. Traffic stops on *all* ports until buffer reprogramming is complete.**

Default

The default egress buffer partition shown in Table 142 on page 749 supports networks with a balanced mix of best-effort, multicast, and lossless traffic. It is the recommended configuration if you are using the default configuration with two lossless forwarding classes.

Copyright © 2018, Juniper Networks, Inc.

Table 142: Default Egress Shared Buffer Partitioning

Lossless Partition	Lossy Partition	Multicast Partition
50%	31%	19%

The sum of the default percentages configured for each partition is 100 percent. The sum of the partition percentages must always total 100 percent.

Options

lossless—Shared buffer space reserved for all lossless egress traffic.

lossy—Shared buffer space for best-effort unicast egress traffic.

multicast—Shared buffer space reserved for all multicast (including broadcast and destination lookup fail) egress traffic.

percent *percent*—The percentage of buffer space to allocate to the specified buffer partition (lossless, lossy, or multicast buffers). The sum of the percentages for the three buffer partitions must total 100 percent.

Required Privilege Level

interfaces—To view this statement in the configuration.
interface-control—To add this statement to the configuration.

Related Documentation

- Example: Recommended Configuration of the Shared Buffer Pool for Networks with Mostly Best-Effort Unicast Traffic on page 592
- Example: Recommended Configuration of the Shared Buffer Pool for Networks with Mostly Multicast Traffic on page 605
- Example: Recommended Configuration of the Shared Buffer Pool for Networks with Mostly Lossless Traffic on page 611
- Configuring Global Ingress and Egress Shared Buffers on page 590
- Understanding CoS Buffer Configuration on page 568

Copyright © 2018, Juniper Networks, Inc.

buffer-partition (Ingress)

Syntax

```
buffer-partition (lossless | lossless-headroom | lossy) {
   percent percentage;
}
```

Hierarchy Level

[edit class-of-service shared-buffer ingress]

Release Information

Statement introduced in Junos OS Release 12.3 for the QFX Series.
Statement introduced in Junos OS Release 14.1X53-D20 for the OCX Series.

Description

The ingress shared buffer pool is divided into three partitions. Each partition reserves a percentage of the available shared buffer pool for a type of traffic, so that the switch provides enough resources to support a mix of best effort (best-effort unicast and multicast) and lossless traffic. To better support the mix of traffic on your network, you can optimize the allocation of ingress shared buffers to different types of traffic by fine-tuning the shared buffer partitions.

NOTE: **OCX Series switches do not support lossless transport.**

The percentages you configure for the three ingress shared buffer partitions must total exactly 100 percent. If the total of the three shared buffer percentages is not 100 percent, the system returns a commit error and does not commit the configuration. You can configure any partition to 0 (zero) percent as long as the allocation to other partitions totals 100 percent.

This is a global allocation that applies to all ingress traffic. All ports on the switch receive the same allocation of ingress shared buffers.

If you do not configure buffer partitions, the switch uses the default partitioning.

CAUTION: **Changing the buffer configuration is a disruptive event. Traffic stops on *all* ports until buffer reprogramming is complete.**

Default

The default ingress buffer partition shown in Table 143 on page 751 supports networks with a balanced mix of best-effort, multicast, and lossless traffic. It is the recommended configuration if you are using the default configuration with two lossless forwarding classes.

Copyright © 2018, Juniper Networks, Inc.

Table 143: Default Ingress Shared Buffer Partitioning

Lossless Partition	Lossless-Headroom Partition	Lossy Partition
9%	45%	46%

The sum of the default percentages configured for each partition is 100 percent. The sum of the partition percentages always must total 100 percent.

Options

lossless—Shared buffer space reserved for all lossless ingress traffic.

lossless-headroom—Shared buffer space reserved to store packets received while either an 802.3x Ethernet PAUSE or a priority-based flow control (PFC) pause is asserted. (When an ingress interface pauses traffic, it must have the buffer space to store all of the packets currently in the buffer, and also all of the packets received before the connected peer stops sending traffic and the wire is cleared of packets.)

lossy—Shared buffer space for best-effort ingress traffic.

percent *percent*—The percentage of buffer space to allocate to the specified buffer partition (lossless, lossless-headroom, or lossy buffers). The sum of the percentages for the three buffer partitions must total 100 percent.

Required Privilege Level

interfaces—To view this statement in the configuration.
interface-control—To add this statement to the configuration.

Related Documentation

- Example: Recommended Configuration of the Shared Buffer Pool for Networks with Mostly Best-Effort Unicast Traffic on page 592
- Example: Recommended Configuration of the Shared Buffer Pool for Networks with Mostly Multicast Traffic on page 605
- Example: Recommended Configuration of the Shared Buffer Pool for Networks with Mostly Lossless Traffic on page 611
- Configuring Global Ingress and Egress Shared Buffers on page 590
- Understanding CoS Buffer Configuration on page 568

Copyright © 2018, Juniper Networks, Inc.

buffer-size

Syntax

```
buffer-size (percent percent | remainder);
```

Hierarchy Level

[edit class-of-service schedulers *scheduler-name*]

Release Information

Statement introduced in Junos OS Release 12.3 for the QFX Series.
Statement introduced in Junos OS Release 14.1X53-D20 for the OCX Series.

Description

On all switches, you configure the proportion of port buffers allocated to a particular output queue using the following process:

1. Configure a scheduler and set the **buffer-size** option.

2. Use a scheduler map to map the scheduler to the forwarding class that is mapped to the queue to which you want to apply the buffer size.

   For example, suppose that you want to change the dedicated buffer allocation for FCoE traffic. FCoE traffic is mapped to the fcoe forwarding class, and the fcoe forwarding class is mapped to queue 3 (this is the default configuration). To use default FCoE traffic mapping, in the scheduler map configuration, map the scheduler to the **fcoe** forwarding class.

3. If you are using enhanced transmission selection (ETS) hierarchical scheduling, associate the scheduler map with the traffic control profile you want to use on the egress ports that carry FCoE traffic. If you are using direct port scheduling, skip this step.

4. If you are using ETS, associate the traffic control profile that includes the scheduler map with the desired egress ports. For this example, you associate the traffic control profile with the ports that carry FCoE traffic. If you are using port scheduling, associate the scheduler map with the desired egress ports.

   Queue 3, which is mapped to the fcoe forwarding class and therefore to the FCoE traffic, receives the dedicated buffer allocation specified in the **buffer-size** statement.

NOTE: **The total of all of the explicitly configured buffer size percentages for all of the queues on a port cannot exceed 100 percent.**

QFX10000 Switches

On QFX10000 switches, the buffer size is the amount of time in milliseconds of port bandwidth that a queue can use to continue to transmit packets during periods of congestion, before the buffer runs out and packets begin to drop.

Copyright © 2018, Juniper Networks, Inc.

The switch can use up to 100 ms total (combined) buffer space for all queues on a port. A buffer-size configured as one percent is equal to 1 ms of buffer usage. A buffer-size of 15 percent (the default value for the best effort and network control queues) is equal to 15 ms of buffer usage.

The total buffer size of the switch is 4 GB. A 40-Gigabit port can use up to 500 MB of buffer space, which is equivalent to 100 ms of port bandwidth on a 40-Gigabit port. A 10-Gigabit port can use up to 125 MB of buffer space, which is equivalent to 100 ms of port bandwidth on a 10-Gigabit port. The total buffer sizes of the eight output queues on a port cannot exceed 100 percent, which is equal to the full 100 ms total buffer available to a port. The maximum amount of buffer space any queue can use is also 100 ms (which equates to a 100 percent buffer-size configuration), but if one queue uses all of the buffer, then no other queue receives buffer space.

There is no minimum buffer allocation, so you can set the buffer-size to zero (0) for a queue. However, we recommend that on queues on which you enable PFC to support lossless transport, you allocate a minimum of 5 ms (a minimum buffer-size of 5 percent). The two default lossless queues, fcoe and no-loss, have buffer-size default values of 35 ms (35 percent).

Queue buffer allocation is dynamic, shared among ports as needed. However, a queue cannot use more than its configured amount of buffer space. For example, if you are using the default CoS configuration, the best-effort queue receives a maximum of 15 ms of buffer space because the default transmit rate for the best-effort queue is 15 percent.

If a switch experiences congestion, queues continue to receives their full buffer allocation until 90 percent of the 4 GB buffer space is consumed. When 90 percent of the buffer space is in use, the amount of buffer space per port, per queue, is reduced in proportion to the configured buffer size for each queue. As the percentage of consumed buffer space rises above 90 percent, the amount of buffer space per port, per queue, continues to be reduced.

On 40-Gigabit ports, because the total buffer is 4 GB and the maximum buffer a port can use is 500 MB, up to seven 40-Gigabit ports can consume their full 100 ms allocation of buffer space. However, if an eighth 40-Gigabit port requires the full 500 MB of buffer space, then the buffer allocations are proportionally reduced because the buffer consumption is above 90 percent.

On 10-Gigabit ports, because the total buffer is 4 GB and the maximum buffer a port can use is 125 MB, up to 28 10-Gigabit ports can consume their full 100 ms allocation of buffer space. However, if a 29th 10-Gigabit port requires the full 125 MB of buffer space, then the buffer allocations are proportionally reduced because the buffer consumption is above 90 percent.

QFX5100, EX4600, QFX3500, and QFX3600 Switches, and QFabric Systems

Set the dedicated buffer size of the egress queue that you bind the scheduler to in the scheduler map configuration. The switch allocates space from the global dedicated buffer pool to ports and queues in a hierarchical manner. The switch allocates an equal number of dedicated buffers to each egress port, so each egress port receives the same amount of dedicated buffer space. The amount of dedicated buffer space per port is not configurable.

However, the **buffer-size** statement allows you to control the way each port allocates its share of dedicated buffers to its queues. For example, if a port only uses two queues to forward traffic, you can configure the port to allocate all of its dedicated buffer space to those two ports and avoid wasting buffer space on queues that are not in use. We recommend that the buffer size should be the same size as the minimum guaranteed transmission rate (the **transmit-rate**).

Copyright © 2018, Juniper Networks, Inc.

Default The default behavior of the differs on different switches.

QFX10000 Switches

If you do not configure buffer-size and you do not explicitly configure a queue scheduler, the default buffer-size is the default transmit rate of the queue. If you explicitly configure a queue scheduler, the default buffer allocations are not used. If you explicitly configure a queue scheduler, configure the buffer-size for each queue in the scheduler, keeping in mind that the total buffer-size of the queues cannot exceed 100 percent (100 ms).

Table 138 on page 673 shows the default queue buffer sizes on QFX10000 switches. The default buffer size is the same as the default transmit rate for each default queue:

Table 144: Default Output Queue Buffer Sizes (QFX10000 Switches)

Queue Number	Forwarding Class	Transmit Rate	Buffer Size
0	best-effort	15%	15%
3	fcoe	35%	35%
4	no-loss	35%	35%
7	network-control	15%	15%

By default, only the queues mapped to the default forwarding classes receive buffer space from the port buffer pool. (Buffers are not wasted on queues that do not carry traffic.)

QFX5100, EX4600, QFX3500, and QFX3600 Switches, and QFabric Systems

The port allocates dedicated buffers to queues that have an explicitly configured scheduler buffer size. If you do not explicitly configure a scheduler buffer size for a queue, the port serves the explicitly configured queues first. Then the port divides the remaining dedicated buffers equally among the queues that have an explicitly attached scheduler *without* an explicitly configured buffer size configuration. (If you configure a scheduler, but you do not configure the buffer size parameter, the default is equivalent to configuring the buffer size with the **remainder** option.)

If you use the default scheduler and scheduler map on a port (no explicit scheduler configuration), then the port allocates its dedicated buffer pool to queues based on the default scheduling. Table 139 on page 674 shows the default queue buffer sizes. The default buffer size is the same as the default transmit rate for each default queue:

Table 145: Default Output Queue Buffer Sizes (QFX5100, EX4600, QFX3500, and QFX3600 Switches, and QFabric Systems)

Queue Number	Forwarding Class	Transmit Rate	Buffer Size
0	best-effort	5%	5%
3	fcoe	35%	35%
4	no-loss	35%	35%
7	network-control	5%	5%
8	mcast	20%	20%

By default, only the queues mapped to the default forwarding classes receive buffer space from the port buffer pool. (Buffers are not wasted on queues that do not carry traffic.)

NOTE: OCX Series switches do not support lossless transport. On OCX Series switches, do not map traffic to the lossless default fcoe and no-loss forwarding classes. OCX Series default DSCP classification does not map traffic to the fcoe and no-loss forwarding classes, so by default, the OCX system does not classify traffic into those forwarding classes. (On other switches, the fcoe and no-loss forwarding classes provide lossless transport for Layer 2 traffic. OCX Series switches do not support lossless Layer 2 transport.) The active forwarding classes (**best-effort**, **network-control**, and **mcast**) share the unused bandwidth assigned to the **fcoe** and **no-loss** forwarding classes.

Options

percent ***percent***—Percentage of the port dedicated buffer pool allocated to the queue (or queues) mapped to the scheduler.

remainder—Remaining dedicated buffer pool after the port satisfies the needs of the explicitly configured buffers. The port divides the remaining buffers equally among the queues that are explicitly attached to a scheduler but that do not have an explicit buffer size configuration (or are configured with **remainder** as the buffer size).

Required Privilege Level

interfaces—To view this statement in the configuration.
interface-control—To add this statement to the configuration.

Copyright © 2018, Juniper Networks, Inc.

egress (Buffer Configuration)

Syntax

```
egress {
   percent percent;
   buffer-partition (lossless | lossy | multicast) {
      percent percent;
   }
}
```

Hierarchy Level

[edit class-of-service shared-buffer]

Release Information

Statement introduced in Junos OS Release 12.3 for the QFX Series.
Statement introduced in Junos OS Release 14.1X53-D20 for the OCX Series.

Description

Configure the global shared buffer pool allocation for egress traffic. The system allocates the shared buffer pool dynamically across its ports as the ports require memory space. Some buffer space is reserved for other buffers such as dedicated buffers (buffers allocated permanently to ports).

The percentage you specify is the percentage of available (user-configurable) buffer space allocated to the global shared egress buffer pool. If you allocate less than 100 percent of the available buffer space to the shared buffer pool, the remaining buffer space is added to the dedicated buffer pool. (You cannot directly configure the dedicated buffer pool for each port; dedicated buffers are allocated evenly across all the ports. However, on a port, you can configure the portion of dedicated port buffer space allocated to each queue in the scheduler configuration using the **buffer-size** option.)

CAUTION: **Changing the buffer configuration is a disruptive event. Traffic stops on *all* ports until buffer reprogramming is complete.**

You can also partition the shared buffer pool to adjust the egress buffer allocations for different mixes of network traffic using the **buffer-partition** statement.

Default

The default shared buffer percentage is 100 percent. (All available buffer space is allocated to the shared buffer pool.)

Options

percent *percent*—Percentage of available egress buffer space allocated to the shared buffer pool. If the percentage is less than 100 percent, the remaining buffer space is allocated to the dedicated buffer pool.

The remaining statement is explained separately. See CLI Explorer.

Required Privilege Level

interfaces—To view this statement in the configuration.
interface-control—To add this statement to the configuration.

Related Documentation

- Example: Recommended Configuration of the Shared Buffer Pool for Networks with Mostly Best-Effort Unicast Traffic on page 592
- Example: Recommended Configuration of the Shared Buffer Pool for Networks with Mostly Multicast Traffic on page 605
- Example: Recommended Configuration of the Shared Buffer Pool for Networks with Mostly Lossless Traffic on page 611
- Configuring Global Ingress and Egress Shared Buffers on page 590
- Understanding CoS Buffer Configuration on page 568

Copyright © 2018, Juniper Networks, Inc.

ingress (Buffer Configuration)

Syntax

```
ingress {
  buffer-partition (lossless | lossless-headroom | lossy) {
    percent percent;
  }
  percent percent;
}
```

Hierarchy Level

[edit class-of-service shared-buffer]

Release Information

Statement introduced in Junos OS Release 12.3 for the QFX Series.
Statement introduced in Junos OS Release 14.1X53-D20 for the OCX Series.

Description

Configure the global shared buffer pool allocation for ingress traffic. The system allocates the shared buffer pool dynamically across its ports as the ports require memory space. Some buffer space is reserved for buffers such as dedicated buffers (buffers allocated permanently to ports) and headroom buffers (buffers that help prevent packet loss on lossless flows).

The percentage you specify is the percentage of available (user-configurable) buffer space allocated to the global shared ingress buffer pool. If you allocate less than 100 percent of the available buffer space to the shared buffer pool, the remaining buffer space is added to the dedicated buffer pool. (You cannot directly configure the dedicated buffer pool for each port; dedicated buffers are allocated evenly across all the ports.)

CAUTION: **Changing the buffer configuration is a disruptive event. Traffic stops on *all* ports until buffer reprogramming is complete.**

You can also partition the shared buffer pool to adjust the ingress buffer allocations for different mixes of network traffic using the **buffer-partition** statement.

Default

The default shared buffer percentage is 100 percent. (All available buffer space is allocated to the shared buffer pool.)

Options

percent *percent*—Percentage of available ingress buffer space allocated to the shared buffer pool. If the percentage is less than 100 percent, the remaining buffer space is allocated to the dedicated buffer pool.

The remaining statement is explained separately. See CLI Explorer.

Required Privilege Level

interfaces—To view this statement in the configuration.
interface-control—To add this statement to the configuration.

Related Documentation

- Example: Recommended Configuration of the Shared Buffer Pool for Networks with Mostly Best-Effort Unicast Traffic on page 592
- Example: Recommended Configuration of the Shared Buffer Pool for Networks with Mostly Multicast Traffic on page 605
- Example: Recommended Configuration of the Shared Buffer Pool for Networks with Mostly Lossless Traffic on page 611
- Configuring Global Ingress and Egress Shared Buffers on page 590
- Understanding CoS Buffer Configuration on page 568

Copyright © 2018, Juniper Networks, Inc.

shared-buffer

Syntax

```
shared-buffer {
  egress {
    buffer-partition (lossless | lossy | multicast) {
      percent percent
    }
    percent percent;
  }
  ingress {
    percent percent;
    buffer-partition (lossless | lossless-headroom | lossy) {
      percent percent
    }
  }
}
```

Hierarchy Level

[edit class-of-service]

Release Information

Statement introduced in Junos OS Release 12.3 for the QFX Series.
Statement introduced in Junos OS Release 14.1X53-D20 for the OCX Series.

Description

Configure the global shared buffer pool allocation to ports. Shared buffers are a pool of buffer space that the system can allocate dynamically across all of its ports as memory space is needed. Some buffer space is reserved for dedicated buffers (buffers allocated permanently to ports), headroom buffers (buffers that help prevent packet loss on lossless flows), and other buffers.

Configure the way the system uses the available (user-configurable) buffer space by setting the **shared-buffer** percentage for the ingress buffer pool and for the egress buffer pool.

The percentage you specify is the percentage of available buffer space allocated to the global shared ingress buffer pool or to the global shared egress buffer pool. If you allocate less than 100 percent of the available buffer space to the shared buffer pool, the remaining buffer space is added to the dedicated buffer pool. (You cannot directly configure the dedicated buffer pool for each port; dedicated buffers are allocated evenly across all the ports.)

CAUTION: **Changing the buffer configuration is a disruptive event. Traffic stops on *all* ports until the buffer reprogramming is complete.**

You can also partition the ingress shared buffer pool and the egress shared buffer pool to adjust the buffer allocations for different mixes of network traffic (best-effort, lossless, multicast) using the **buffer-partition** statement.

NOTE: If you commit a buffer configuration for which the switch does not have sufficient resources, the switch might log an error instead of returning a commit error. In that case, a syslog message is displayed on the console. For example:

```
user@host# commit
configuration check succeeds

Message from syslogd@host at Jun 13 11:11:10  ...
host dc-pfe: Not enough Ingress Lossless headroom.(Already allocated
more). Dedicated : 14340 Lossy : 47100 Lossless 4239 Headroom 21195
Avail : 20781
commit complete
```

If the buffer configuration commits but you receive a syslog message that indicates the configuration cannot be implemented, you can:

- Reconfigure the buffers or reconfigure other parameters (for example, the PFC configuration, which affects the need for lossless headroom buffers and lossless buffers—the more priorities you pause, the more lossless and lossless headroom buffer space you need), then attempt the commit operation again.
- Roll back the switch to the last successful configuration.

If you receive a syslog message that says the buffer configuration cannot be implemented, you must take corrective action. If you do not fix the configuration or roll back to a previous successful configuration, the system behavior is unpredictable.

Options The remaining statements are explained separately. See CLI Explorer.

Required Privilege Level
interfaces—To view this statement in the configuration.
interface-control—To add this statement to the configuration.

Related Documentation

- Example: Recommended Configuration of the Shared Buffer Pool for Networks with Mostly Best-Effort Unicast Traffic on page 592
- Example: Recommended Configuration of the Shared Buffer Pool for Networks with Mostly Multicast Traffic on page 605
- Example: Recommended Configuration of the Shared Buffer Pool for Networks with Mostly Lossless Traffic on page 611
- Configuring Global Ingress and Egress Shared Buffers on page 590
- Understanding CoS Buffer Configuration on page 568

 Copyright © 2018, Juniper Networks, Inc.

CHAPTER 16

Operational Commands (Basic Concepts)

- Monitoring Interfaces That Have CoS Components on page 763
- show class-of-service
- show class-of-service interface
- show pfe next-hop
- show pfe route
- show pfe terse
- show pfe version

Monitoring Interfaces That Have CoS Components

Purpose Use the monitoring functionality to display details about the physical and logical interfaces and the CoS components assigned to them.

Action To monitor interfaces that have CoS components in the CLI, enter the command:

user@switch> **show class-of-service interface**

To monitor a specific interface in the CLI, enter the command:

user@switch> **show class-of-service interface *interface-name***

Meaning Table 146 on page 763 summarizes key output fields for CoS interfaces.

Table 146: Summary of Key CoS Interfaces Output Fields

Field	Values
Physical interface	Name of a physical interface to which CoS components are assigned.
Index	Index of this interface or the internal index of a specific object.
Queues supported	Number of queues you can configure on the interface.
Queues in use	Number of queues currently configured.
Scheduler map	Name of the scheduler map associated with this interface.

Copyright © 2018, Juniper Networks, Inc.

Table 146: Summary of Key CoS Interfaces Output Fields (continued)

Field	Values
Congestion-notification	Status of congestion notification (enabled or disabled). NOTE: OCX Series switches do not support congestion notification profiles.
Rewrite Input IEEE Code-point	(Fibre Channel NP_Port interfaces only) IEEE 802.1p code point (priority) the interface assigns to incoming Fibre Channel (FC) traffic when the interface encapsulates the FC traffic in Ethernet before forwarding it onto the FCoE network.
Logical Interface	Name of a logical interface on the physical interface to which CoS components are assigned.
Object	Category of an object—for example, **classifier**, **scheduler-map**, or **rewrite**.
Name	Name of the object—for example, **ba-classifier**.
Type	Type of the object—for example, **ieee8021p** for a classifier.

Related Documentation

- Assigning CoS Components to Interfaces on page 23

Copyright © 2018, Juniper Networks, Inc.

show class-of-service

Syntax

```
show class-of-service
```

Release Information

Command introduced in Junos OS Release 11.1 for the QFX Series.
Command introduced in Junos OS Release 14.1X53-D20 for the OCX Series.

Description

Display the class-of-service (CoS) information.

Required Privilege Level

view

Related Documentation

- Monitoring CoS Code-Point Value Aliases on page 826
- Monitoring CoS Classifiers on page 821
- Monitoring CoS Forwarding Classes on page 822
- Monitoring Interfaces That Have CoS Components on page 763
- Monitoring CoS Scheduler Maps on page 885
- Monitoring CoS Rewrite Rules on page 825

List of Sample Output

show class-of- service on page 767

Output Fields

Table 147 on page 765 lists the output fields for the **show class-of-service** command. Output fields are listed in the approximate order in which they appear.

Table 147: show class-of-service Output Fields

Field Name	Field Description	Level of Output
Forwarding class	The forwarding class configuration: • **Forwarding class**—Name of the forwarding class. • **ID**—Forwarding class ID. • **Queue**—Queue number.	All levels
Code point type	The type of code-point alias: • **dscp**—Aliases for DiffServ code point (DSCP) values. • **ieee–802.1**—Aliases for IEEE 802.1p values. • **exp**—Aliases for MPLS EXP values.	All levels
Alias	Names given to CoS values.	All levels
Bit pattern	Set of bits associated with an alias.	All levels
Classifier	Name of the classifier.	All levels

Table 147: show class-of-service Output Fields (continued)

Field Name	Field Description	Level of Output
Code point	Code-point values.	All levels
Loss priority	Loss priority assigned to specific CoS values and aliases of the classifier.	All levels
Rewrite rule	Name of the rewrite rule if one has been configured.	All levels
Drop profile	Name of the drop profile.	All levels
Type	Type of drop profile. QFX Series supports only the **discrete** type of drop-profile.	All levels
Fill level	Percentage of queue buffer fullness in a drop profile at which packets begin to drop during periods of congestion.	All levels
Scheduler map	Name of the scheduler map.	All levels
Scheduler	Name of the scheduler.	All levels
Transmit rate	Transmission rate of the scheduler.	All levels
Buffer size	Delay buffer size in the queue.	All levels
Drop profiles	Drop profiles configured for the specified scheduler.	All levels
Protocol	Transport protocol corresponding to the drop profile.	All levels
Name	Name of the drop profile.	All levels
Queues supported	Number of queues that can be configured on the interface.	All levels
Queues in use	Number of queues currently configured.	All levels
Physical interface	Name of the physical interface.	All levels
Scheduler map	Name of the scheduler map.	All levels
Congestion-notification	Enabled if a congestion notification profile is applied to the interface; disabled if no congestion notification profile is applied to the interface. NOTE: OCX Series switches do not support congestion notification profiles.	All levels
Forwarding class set	Name of the forwarding class set (priority group). NOTE: Only on systems that support enhanced transmission selection (ETS) hierarchical port scheduling.	
Index	Internal index of an object.	All levels

Copyright © 2018, Juniper Networks, Inc.

Sample Output

show class-of- service

```
user@switch> show class-of-service
Forwarding class                        ID      Queue
  best-effort                            0       0
  fcoe                                   1       3
  no-loss                                2       4
  network-control                        3       7
  mcast                                  8       8

Code point type: dscp
  Alias              Bit pattern
  af11               001010
  af12               001100
  ...                ...

Code point type: ieee-802.1
  Alias              Bit pattern
  af11               100
  ...                ...

Classifier: dscp-default, Code point type: dscp, Index: 7
  Code point         Forwarding class                    Loss priority
  000000             best-effort                         low
  000001             best-effort                         low
  ...                ...                                 ...

Classifier: ieee8021p-default, Code point type: ieee-802.1, Index: 11
  Code point         Forwarding class                    Loss priority
  000                best-effort                         low
  001                best-effort                         low
  010                best-effort                         low
  011                fcoe                                low
  100                no-loss                             low
  101                best-effort                         low
  110                network-control                     low
  111                network-control                     low

Drop profile:<default-drop-profile>, Type: discrete, Index: 1
  Fill level
         100

Scheduler map: <default>, Index: 2

  Scheduler: <default-be>, Forwarding class: best-effort, Index: 21
    Transmit rate: 5 percent, Rate Limit: none, Buffer size: 5 percent, Buffer
Limit: none,
    Priority: low
    Excess Priority: low
    drop-profile-map-set-type: mark
    Drop profiles:
      Loss priority   Protocol    Index    Name
      Low             any             1    <default-drop-profile>
      Medium high     any             1    <default-drop-profile>
      High            any             1    <default-drop-profile>

  Scheduler: <default-fcoe>, Forwarding class: fcoe, Index: 50
```

```
    Transmit rate: 35 percent, Rate Limit: none, Buffer size: 35 percent, Buffer
 Limit: none,
    Priority: low
    Excess Priority: low
    drop-profile-map-set-type: mark
    Drop profiles:
      Loss priority   Protocol    Index    Name
      Low             any             1    <default-drop-profile>
      Medium high     any             1    <default-drop-profile>
      High            any             1    <default-drop-profile>

  Scheduler: <default-noloss>, Forwarding class: no-loss, Index: 51
    Transmit rate: 35 percent, Rate Limit: none, Buffer size: 35 percent, Buffer
 Limit: none,
    Priority: low
    Excess Priority: low
    drop-profile-map-set-type: mark
    Drop profiles:
      Loss priority   Protocol    Index    Name
      Low             any             1    <default-drop-profile>
      Medium high     any             1    <default-drop-profile>
      High            any             1    <default-drop-profile>

  Scheduler: <default-nc>, Forwarding class: network-control, Index: 23
    Transmit rate: 5 percent, Rate Limit: none, Buffer size: 5 percent, Buffer
Limit: none,
    Priority: low
    Excess Priority: low
    drop-profile-map-set-type: mark
    Drop profiles:
      Loss priority   Protocol    Index    Name
      Low             any             1    <default-drop-profile>
      Medium high     any             1    <default-drop-profile>
      High            any             1    <default-drop-profile>

  Scheduler: <default-mcast>, Forwarding class: mcast, Index: 49
    Transmit rate: 20 percent, Rate Limit: none, Buffer size: 20 percent, Buffer
 Limit: none,
    Priority: low
    Excess Priority: low
    drop-profile-map-set-type: mark
    Drop profiles:
      Loss priority   Protocol    Index    Name
      Low             any             1    <default-drop-profile>
      Medium high     any             1    <default-drop-profile>
      High            any             1    <default-drop-profile>

Physical interface: xe-0/0/0, Index: 129
Queues supported: 12, Queues in use: 12
  Scheduler map: <default>, Index: 2
  Congestion-notification: Disabled

Physical interface: xe-0/0/1, Index: 130
Queues supported: 12, Queues in use: 12
  Scheduler map: <default>, Index: 2
  Congestion-notification: Disabled

...             ...              ...

Forwarding class set: lan-fcset, Type: normal-type, Forwarding class set index:
```


Copyright © 2018, Juniper Networks, Inc.

```
7
  Forwarding class                              Index
  best-effort                                     0
```

show class-of-service interface

Syntax

```
show class-of-service interface
<comprehensive | detail> <interface-name>
```

Release Information

Command introduced before Junos OS Release 7.4.
Command introduced in Junos OS Release 9.0 for EX Series switches.
Forwarding class map information added in Junos OS Release 9.4.
Command introduced in Junos OS Release 11.1 for the QFX Series.
Command introduced in Junos OS Release 12.1 for the PTX Series Packet Transport routers.
Command introduced in Junos OS Release 12.2 for the ACX Series Universal Metro routers.
Command introduced in Junos OS Release 14.1X53-D20 for the OCX Series.
Options **detail** and **comprehensive** introduced in Junos OS Release 11.4.
Command introduced in Junos OS Release 15.1R3 on MX Series routers for enhanced subscriber management.

Description

Display the logical and physical interface associations for the classifier, rewrite rules, and scheduler map objects.

NOTE: **On routing platforms with dual Routing Engines, running this command on the backup Routing Engine, with or without any of the available options, is not supported and produces the following error message:**

error: the class-of-service subsystem is not running

Options

none—Display CoS associations for all physical and logical interfaces.

comprehensive—(M Series, MX Series, and T Series routers) (Optional) Display comprehensive quality-of-service (QoS) information about all physical and logical interfaces.

detail—(M Series, MX Series, and T Series routers) (Optional) Display QoS and CoS information based on the interface.

If the **interface** *interface-name* is a physical interface, the output includes:

- Brief QoS information about the physical interface
- Brief QoS information about the logical interface
- CoS information about the physical interface
- Brief information about filters or policers of the logical interface
- Brief CoS information about the logical interface

If the **interface** *interface-name* is a logical interface, the output includes:

Copyright © 2018, Juniper Networks, Inc.

- Brief QoS information about the logical interface
- Information about filters or policers for the logical interface
- CoS information about the logical interface

interface-name—(Optional) Display class-of-service (CoS) associations for the specified interface.

none—Display CoS associations for all physical and logical interfaces.

NOTE: ACX5000 routers do not support classification on logical interfaces and therefore do not show CoS associations for logical interfaces with this command.

Required Privilege Level view

Related Documentation

- *Verifying and Managing Junos OS Enhanced Subscriber Management*

List of Sample Output

show class-of-service interface (Physical) on page 783
show class-of-service interface (Logical) on page 783
show class-of-service interface (Gigabit Ethernet) on page 784
show class-of-service interface (ANCP) on page 784
show class-of-service interface (PPPoE Interface) on page 784
show class-of-service interface (DHCP Interface) on page 784
show class-of-service interface (T4000 Routers with Type 5 FPCs) on page 785
show class-of-service interface detail on page 785
show class-of-service interface comprehensive on page 786
show class-of-service interface (ACX Series Routers) on page 797
show class-of-service interface (PPPoE Subscriber Interface for Enhanced Subscriber Management) on page 799

Output Fields Table 148 on page 771 describes the output fields for the **show class-of-service interface** command. Output fields are listed in the approximate order in which they appear.

Table 148: show class-of-service interface Output Fields

Field Name	Field Description
Physical interface	Name of a physical interface.
Index	Index of this interface or the internal index of this object. (Enhanced subscriber management for MX Series routers) Index values for dynamic CoS traffic control profiles and dynamic scheduler maps are larger for enhanced subscriber management than they are for legacy subscriber management.

Table 148: show class-of-service interface Output Fields (continued)

Field Name	Field Description
Dedicated Queues	Status of dedicated queues configured on an interface. Supported only on Trio MPC/MIC interfaces on MX Series routers. (Enhanced subscriber management for MX-Series routers) This field is not displayed for enhanced subscriber management.
Maximum usable queues	Number of queues you can configure on the interface.
Maximum usable queues	Maximum number of queues you can use.
Total non-default queues created	Number of queues created in addition to the default queues. Supported only on Trio MPC/MIC interfaces on MX Series routers. (Enhanced subscriber management for MX Series routers) This field is not displayed for enhanced subscriber management.
Rewrite Input IEEE Code-point	(QFX3500 switches only) IEEE 802.1p code point (priority) rewrite value. Incoming traffic from the Fibre Channel (FC) SAN is classified into the forwarding class specified in the native FC interface (NP_Port) fixed classifier and uses the priority specified as the IEEE 802.1p rewrite value.
Shaping rate	Maximum transmission rate on the physical interface. You can configure the shaping rate on the physical interface, or on the logical interface, but not on both. Therefore, the **Shaping rate** field is displayed for either the physical interface or the logical interface.
Scheduler map	Name of the output scheduler map associated with this interface. (Enhanced subscriber management for MX Series routers) The name of the dynamic scheduler map object is associated with a generated UID (for example, **SMAP-1_UID1002**) instead of with a subscriber interface.
Scheduler map forwarding class sets	(QFX Series only) Name of the output fabric scheduler map associated with a QFabric system Interconnect device interface.
Input shaping rate	For Gigabit Ethernet IQ2 PICs, maximum transmission rate on the input interface.
Input scheduler map	For Gigabit Ethernet IQ2 PICs, name of the input scheduler map associated with this interface.
Chassis scheduler map	Name of the scheduler map associated with the packet forwarding component queues.
Rewrite	Name and type of the rewrite rules associated with this interface.
Traffic-control-profile	Name of the associated traffic control profile. (Enhanced subscriber management for MX Series routers) The name of the dynamic traffic control profile object is associated with a generated UID (for example, **TC_PROF_100_199_SERIES_UID1006**) instead of with a subscriber interface.
Classifier	Name and type of classifiers associated with this interface.

Copyright © 2018, Juniper Networks, Inc.

Table 148: show class-of-service interface Output Fields (continued)

Field Name	Field Description
Forwarding-class-map	Name of the forwarding map associated with this interface.
Congestion-notification	(QFX Series and EX4600 switches only) Congestion notification state, **enabled** or **disabled**.
Logical interface	Name of a logical interface.
Object	Category of an object: **Classifier**, **Fragmentation-map** (for LSQ interfaces only), **Scheduler-map**, **Rewrite**, **Translation Table** (for IQE PICs only), or **traffic-class-map** (for T4000 routers with Type 5 FPCs).
Name	Name of an object.
Type	Type of an object: **dscp**, **dscp-ipv6**, **exp**, **ieee-802.1**, **ip**, **inet-precedence**, or **ieee-802.1ad** (for traffic class map on T4000 routers with Type 5 FPCs)..
Link-level type	Encapsulation on the physical interface.
MTU	MTU size on the physical interface.
Speed	Speed at which the interface is running.
Loopback	Whether loopback is enabled and the type of loopback.
Source filtering	Whether source filtering is enabled or disabled.
Flow control	Whether flow control is enabled or disabled.
Auto-negotiation	(Gigabit Ethernet interfaces) Whether autonegotiation is enabled or disabled.
Remote-fault	(Gigabit Ethernet interfaces) Remote fault status. • **Online**—Autonegotiation is manually configured as online. • **Offline**—Autonegotiation is manually configured as offline.

Copyright © 2018, Juniper Networks, Inc.

Table 148: show class-of-service interface Output Fields (continued)

Field Name	Field Description
Device flags	The **Device flags** field provides information about the physical device and displays one or more of the following values: • **Down**—Device has been administratively disabled. • **Hear-Own-Xmit**—Device receives its own transmissions. • **Link-Layer-Down**—The link-layer protocol has failed to connect with the remote endpoint. • **Loopback**—Device is in physical loopback. • **Loop-Detected**—The link layer has received frames that it sent, thereby detecting a physical loopback. • **No-Carrier**—On media that support carrier recognition, no carrier is currently detected. • **No-Multicast**—Device does not support multicast traffic. • **Present**—Device is physically present and recognized. • **Promiscuous**—Device is in promiscuous mode and recognizes frames addressed to all physical addresses on the media. • **Quench**—Transmission on the device is quenched because the output buffer is overflowing. • **Recv-All-Multicasts**—Device is in multicast promiscuous mode and therefore provides no multicast filtering. • **Running**—Device is active and enabled.

Interface flags	The **Interface flags** field provides information about the physical interface and displays one or more of the following values:
	• **Admin-Test**—Interface is in test mode and some sanity checking, such as loop detection, is disabled.
	• **Disabled**—Interface is administratively disabled.
	• **Down**—A hardware failure has occurred.
	• **Hardware-Down**—Interface is nonfunctional or incorrectly connected.
	• **Link-Layer-Down**—Interface keepalives have indicated that the link is incomplete.
	• **No-Multicast**—Interface does not support multicast traffic.
	• **No-receive No-transmit**—Passive monitor mode is configured on the interface.
	• **Point-To-Point**—Interface is point-to-point.
	• **Pop all MPLS labels from packets of depth**—MPLS labels are removed as packets arrive on an interface that has the **pop-all-labels** statement configured. The depth value can be one of the following:
	  ◦ **1**—Takes effect for incoming packets with one label only.
	  ◦ **2**—Takes effect for incoming packets with two labels only.
	  ◦ **[1 2]**—Takes effect for incoming packets with either one or two labels.
	• **Promiscuous**—Interface is in promiscuous mode and recognizes frames addressed to all physical addresses.
	• **Recv-All-Multicasts**—Interface is in multicast promiscuous mode and provides no multicast filtering.
	• **SNMP-Traps**—SNMP trap notifications are enabled.
	• **Up**—Interface is enabled and operational.

Copyright © 2018, Juniper Networks, Inc.

Table 148: show class-of-service interface Output Fields (continued)

Field Name	Field Description
Flags	The **Logical interface flags** field provides information about the logical interface and displays one or more of the following values: • **ACFC Encapsulation**—Address control field Compression (ACFC) encapsulation is enabled (negotiated successfully with a peer). • **Device-down**—Device has been administratively disabled. • **Disabled**—Interface is administratively disabled. • **Down**—A hardware failure has occurred. • **Clear-DF-Bit**—GRE tunnel or IPsec tunnel is configured to clear the Don't Fragment (DF) bit. • **Hardware-Down**—Interface protocol initialization failed to complete successfully. • **PFC**—Protocol field compression is enabled for the PPP session. • **Point-To-Point**—Interface is point-to-point. • **SNMP-Traps**—SNMP trap notifications are enabled. • **Up**—Interface is enabled and operational.
Encapsulation	Encapsulation on the logical interface.
Admin	Administrative state of the interface (**Up** or **Down**)
Link	Status of physical link (**Up** or **Down**).
Proto	Protocol configured on the interface.
Input Filter	Names of any firewall filters to be evaluated when packets are received on the interface, including any filters attached through activation of dynamic service.
Output Filter	Names of any firewall filters to be evaluated when packets are transmitted on the interface, including any filters attached through activation of dynamic service.
Link flags	Provides information about the physical link and displays one or more of the following values: • **ACFC**—Address control field compression is configured. The Point-to-Point Protocol (PPP) session negotiates the ACFC option. • **Give-Up**—Link protocol does not continue connection attempts after repeated failures. • **Loose-LCP**—PPP does not use the Link Control Protocol (LCP) to indicate whether the link protocol is operational. • **Loose-LMI**—Frame Relay does not use the Local Management Interface (LMI) to indicate whether the link protocol is operational. • **Loose-NCP**—PPP does not use the Network Control Protocol (NCP) to indicate whether the device is operational. • **Keepalives**—Link protocol keepalives are enabled. • **No-Keepalives**—Link protocol keepalives are disabled. • **PFC**—Protocol field compression is configured. The PPP session negotiates the PFC option.
Hold-times	Current interface hold-time up and hold-time down, in milliseconds.
CoS queues	Number of CoS queues configured.

Copyright © 2018, Juniper Networks, Inc.

Table 148: show class-of-service interface Output Fields (continued)

Field Name	Field Description
Last flapped	Date, time, and how long ago the interface went from down to up. The format is **Last flapped:** ***year-month-day hour:minute:second:timezone*** **(*hour:minute:second* ago)**. For example, **Last flapped: 2002-04-26 10:52:40 PDT (04:33:20 ago).**
Statistics last cleared	Number and rate of bytes and packets received and transmitted on the physical interface. • **Input bytes**—Number of bytes received on the interface. • **Output bytes**—Number of bytes transmitted on the interface. • **Input packets**—Number of packets received on the interface. • **Output packets**—Number of packets transmitted on the interface.
Exclude Overhead Bytes	Exclude the counting of overhead bytes from aggregate queue statistics. • **Disabled**—Default configuration. Includes the counting of overhead bytes in aggregate queue statistics. • **Enabled**—Excludes the counting of overhead bytes from aggregate queue statistics for just the physical interface. • **Enabled for hierarchy**—Excludes the counting of overhead bytes from aggregate queue statistics for the physical interface as well as all child interfaces, including logical interfaces and interface sets.
IPv6 transit statistics	Number of IPv6 transit bytes and packets received and transmitted on the logical interface if IPv6 statistics tracking is enabled.
Input errors	Input errors on the interface. The labels are explained in the following list: • **Errors**—Sum of the incoming frame aborts and FCS errors. • **Drops**—Number of packets dropped by the input queue of the I/O Manager ASIC. If the interface is saturated, this number increments once for every packet that is dropped by the ASIC's RED mechanism. • **Framing errors**—Number of packets received with an invalid frame checksum (FCS). • **Runts**—Number of frames received that are smaller than the runt threshold. • **Giants**—Number of frames received that are larger than the giant threshold. • **Bucket Drops**—Drops resulting from the traffic load exceeding the interface transmit or receive leaky bucket configuration. • **Policed discards**—Number of frames that the incoming packet match code discarded because they were not recognized or not of interest. Usually, this field reports protocols that Junos OS does not handle. • **L3 incompletes**—Number of incoming packets discarded because they failed Layer 3 (usually IPv4) sanity checks of the header. For example, a frame with less than 20 bytes of available IP header is discarded. Layer 3 incomplete errors can be ignored by configuring the **ignore-l3-incompletes** statement. • **L2 channel errors**—Number of times the software did not find a valid logical interface for an incoming frame. • **L2 mismatch timeouts**—Number of malformed or short packets that caused the incoming packet handler to discard the frame as unreadable. • **HS link CRC errors**—Number of errors on the high-speed links between the ASICs responsible for handling the router interfaces. • **HS link FIFO overflows**—Number of FIFO overflows on the high-speed links between the ASICs responsible for handling the router interfaces.

Copyright © 2018, Juniper Networks, Inc.

Table 148: show class-of-service interface Output Fields (continued)

Field Name	Field Description
Output errors	Output errors on the interface. The labels are explained in the following list: • **Carrier transitions**—Number of times the interface has gone from **down** to **up**. This number does not normally increment quickly, increasing only when the cable is unplugged, the far-end system is powered down and up, or another problem occurs. If the number of carrier transitions increments quickly (perhaps once every 10 seconds), the cable, the far-end system, or the PIC is malfunctioning. • **Errors**—Sum of the outgoing frame aborts and FCS errors. • **Drops**—Number of packets dropped by the output queue of the I/O Manager ASIC. If the interface is saturated, this number increments once for every packet that is dropped by the ASIC's RED mechanism. NOTE: Due to accounting space limitations on certain Type 3 FPCs (which are supported in M320 and T640 routers), the **Drops** field does not always use the correct value for queue 6 or queue 7 for interfaces on 10-port 1-Gigabit Ethernet PICs. • **Aged packets**—Number of packets that remained in shared packet SDRAM so long that the system automatically purged them. The value in this field should never increment. If it does, it is most likely a software bug or possibly malfunctioning hardware. • **HS link FIFO underflows**—Number of FIFO underflows on the high-speed links between the ASICs responsible for handling the router interfaces. • **MTU errors**—Number of packets whose size exceeds the MTU of the interface.
Egress queues	Total number of egress Maximum usable queues on the specified interface.
Queue counters	CoS queue number and its associated user-configured forwarding class name. • **Queued packets**—Number of queued packets. • **Transmitted packets**—Number of transmitted packets. • **Dropped packets**—Number of packets dropped by the ASIC's RED mechanism. NOTE: Due to accounting space limitations on certain Type 3 FPCs (which are supported in M320 and T640 routers), the **Dropped packets** field does not always display the correct value for queue 6 or queue 7 for interfaces on 10-port 1-Gigabit Ethernet PICs.
SONET alarms **SONET defects**	(SONET) SONET media-specific alarms and defects that prevent the interface from passing packets. When a defect persists for a certain period, it is promoted to an alarm. Based on the router configuration, an alarm can ring the red or yellow alarm bell on the router or light the red or yellow alarm LED on the craft interface. See these fields for possible alarms and defects: **SONET PHY**, **SONET section**, **SONET line**, and **SONET path**.
SONET PHY	Counts of specific SONET errors with detailed information. • **Seconds**—Number of seconds the defect has been active. • **Count**—Number of times that the defect has gone from inactive to active. • **State**—State of the error. A state other than **OK** indicates a problem. The **SONET PHY** field has the following subfields: • **PLL Lock**—Phase-locked loop • **PHY Light**—Loss of optical signal

Table 148: show class-of-service interface Output Fields (continued)

Field Name	Field Description
SONET section	Counts of specific SONET errors with detailed information. • **Seconds**—Number of seconds the defect has been active. • **Count**—Number of times that the defect has gone from inactive to active. • **State**—State of the error. A state other than **OK** indicates a problem. The **SONET section** field has the following subfields: • **BIP-B1**—Bit interleaved parity for SONET section overhead • **SEF**—Severely errored framing • **LOS**—Loss of signal • **LOF**—Loss of frame • **ES-S**—Errored seconds (section) • **SES-S**—Severely errored seconds (section) • **SEFS-S**—Severely errored framing seconds (section)
SONET line	Active alarms and defects, plus counts of specific SONET errors with detailed information. • **Seconds**—Number of seconds the defect has been active. • **Count**—Number of times that the defect has gone from inactive to active. • **State**—State of the error. A state other than **OK** indicates a problem. The **SONET line** field has the following subfields: • **BIP-B2**—Bit interleaved parity for SONET line overhead • **REI-L**—Remote error indication (near-end line) • **RDI-L**—Remote defect indication (near-end line) • **AIS-L**—Alarm indication signal (near-end line) • **BERR-SF**—Bit error rate fault (signal failure) • **BERR-SD**—Bit error rate defect (signal degradation) • **ES-L**—Errored seconds (near-end line) • **SES-L**—Severely errored seconds (near-end line) • **UAS-L**—Unavailable seconds (near-end line) • **ES-LFE**—Errored seconds (far-end line) • **SES-LFE**—Severely errored seconds (far-end line) • **UAS-LFE**—Unavailable seconds (far-end line)

Copyright © 2018, Juniper Networks, Inc.

Table 148: show class-of-service interface Output Fields (continued)

Field Name	Field Description
SONET path	Active alarms and defects, plus counts of specific SONET errors with detailed information. • **Seconds**—Number of seconds the defect has been active. • **Count**—Number of times that the defect has gone from inactive to active. • **State**—State of the error. A state other than **OK** indicates a problem. The **SONET path** field has the following subfields: • **BIP-B3**—Bit interleaved parity for SONET section overhead • **REI-P**—Remote error indication • **LOP-P**—Loss of pointer (path) • **AIS-P**—Path alarm indication signal • **RDI-P**—Path remote defect indication • **UNEQ-P**—Path unequipped • **PLM-P**—Path payload (signal) label mismatch • **ES-P**—Errored seconds (near-end STS path) • **SES-P**—Severely errored seconds (near-end STS path) • **UAS-P**—Unavailable seconds (near-end STS path) • **ES-PFE**—Errored seconds (far-end STS path) • **SES-PFE**—Severely errored seconds (far-end STS path) • **UAS-PFE**—Unavailable seconds (far-end STS path)
Received SONET overhead **Transmitted SONET overhead**	Values of the received and transmitted SONET overhead: • **C2**—Signal label. Allocated to identify the construction and content of the STS-level SPE and for PDI-P. • **F1**—Section user channel byte. This byte is set aside for the purposes of users. • **K1** and **K2**—These bytes are allocated for APS signaling for the protection of the multiplex section. • **J0**—Section trace. This byte is defined for STS-1 number 1 of an STS-*N* signal. Used to transmit a 1-byte fixed-length string or a 16-byte message so that a receiving terminal in a section can verify its continued connection to the intended transmitter. • **S1**—Synchronization status. The S1 byte is located in the first STS-1 number of an STS-*N* signal. • **Z3** and **Z4**—Allocated for future use.
Received path trace **Transmitted path trace**	SONET/SDH interfaces allow path trace bytes to be sent inband across the SONET/SDH link. Juniper Networks and other router manufacturers use these bytes to help diagnose misconfigurations and network errors by setting the transmitted path trace message so that it contains the system hostname and name of the physical interface. The received path trace value is the message received from the router at the other end of the fiber. The transmitted path trace value is the message that this router transmits.
HDLC configuration	Information about the HDLC configuration. • **Policing bucket**—Configured state of the receiving policer. • **Shaping bucket**—Configured state of the transmitting shaper. • **Giant threshold**—Giant threshold programmed into the hardware. • **Runt threshold**—Runt threshold programmed into the hardware.

Copyright © 2018, Juniper Networks, Inc.

Table 148: show class-of-service interface Output Fields (continued)

Field Name	Field Description
Packet Forwarding Engine configuration	Information about the configuration of the Packet Forwarding Engine: • **Destination slot**—FPC slot number. • **PLP byte**—Packet Level Protocol byte.
CoS information	Information about the CoS queue for the physical interface. • **CoS transmit queue**—Queue number and its associated user-configured forwarding class name. • **Bandwidth %**—Percentage of bandwidth allocated to the queue. • **Bandwidth bps**—Bandwidth allocated to the queue (in bps). • **Buffer %**—Percentage of buffer space allocated to the queue. • **Buffer usec**—Amount of buffer space allocated to the queue, in microseconds. This value is nonzero only if the buffer size is configured in terms of time. • **Priority**—Queue priority: **low** or **high**. • **Limit**—Displayed if rate limiting is configured for the queue. Possible values are **none** and **exact**. If **exact** is configured, the queue transmits only up to the configured bandwidth, even if excess bandwidth is available. If **none** is configured, the queue transmits beyond the configured bandwidth if bandwidth is available.
Forwarding classes	Total number of forwarding classes supported on the specified interface.
Egress queues	Total number of egress Maximum usable queues on the specified interface.
Queue	Queue number.
Forwarding classes	Forwarding class name.
Queued Packets	Number of packets queued to this queue.
Queued Bytes	Number of bytes queued to this queue. The byte counts vary by PIC type.
Transmitted Packets	Number of packets transmitted by this queue. When fragmentation occurs on the egress interface, the first set of packet counters shows the postfragmentation values. The second set of packet counters (displayed under the **Packet Forwarding Engine Chassis Queues** field) shows the prefragmentation values.
Transmitted Bytes	Number of bytes transmitted by this queue. The byte counts vary by PIC type.
Tail-dropped packets	Number of packets dropped because of tail drop.

Copyright © 2018, Juniper Networks, Inc.

Table 148: show class-of-service interface Output Fields (continued)

Field Name	Field Description

RED-dropped packets	Number of packets dropped because of random early detection (RED).
	• (M Series and T Series routers only) On M320 and M120 routers and the T Series routers, the total number of dropped packets is displayed. On all other M Series routers, the output classifies dropped packets into the following categories:
	  • **Low, non-TCP**—Number of low-loss priority non-TCP packets dropped because of RED.
	  • **Low, TCP**—Number of low-loss priority TCP packets dropped because of RED.
	  • **High, non-TCP**—Number of high-loss priority non-TCP packets dropped because of RED.
	  • **High, TCP**—Number of high-loss priority TCP packets dropped because of RED.
	• (MX Series routers with enhanced DPCs, and T Series routers with enhanced FPCs only) The output classifies dropped packets into the following categories:
	  • **Low**—Number of low-loss priority packets dropped because of RED.
	  • **Medium-low**—Number of medium-low loss priority packets dropped because of RED.
	  • **Medium-high**—Number of medium-high loss priority packets dropped because of RED.
	  • **High**—Number of high-loss priority packets dropped because of RED.
	NOTE: Due to accounting space limitations on certain Type 3 FPCs (which are supported in M320 and T640 routers), this field does not always display the correct value for queue 6 or queue 7 for interfaces on 10-port 1-Gigabit Ethernet PICs.

RED-dropped bytes	Number of bytes dropped because of RED. The byte counts vary by PIC type.
	• (M Series and T Series routers only) On M320 and M120 routers and the T Series routers, only the total number of dropped bytes is displayed. On all other M Series routers, the output classifies dropped bytes into the following categories:
	  • **Low, non-TCP**—Number of low-loss priority non-TCP bytes dropped because of RED.
	  • **Low, TCP**—Number of low-loss priority TCP bytes dropped because of RED.
	  • **High, non-TCP**—Number of high-loss priority non-TCP bytes dropped because of RED.
	  • **High, TCP**—Number of high-loss priority TCP bytes dropped because of RED.
	NOTE: Due to accounting space limitations on certain Type 3 FPCs (which are supported in M320 and T640 routers), this field does not always display the correct value for queue 6 or queue 7 for interfaces on 10-port 1-Gigabit Ethernet PICs.

Transmit rate	Configured transmit rate of the scheduler. The rate is a percentage of the total interface bandwidth.
Rate Limit	Rate limiting configuration of the queue. Possible values are : • **None**—No rate limit. • **exact**—Queue transmits at the configured rate.
Buffer size	Delay buffer size in the queue.
Priority	Scheduling priority configured as **low** or **high**.
Excess Priority	Priority of the excess bandwidth traffic on a scheduler: **low**, **medium-low**, **medium-high**, **high**, or **none**.

Table 148: show class-of-service interface Output Fields (continued)

Field Name	Field Description
Drop profiles	Display the assignment of drop profiles. • **Loss priority**—Packet loss priority for drop profile assignment. • **Protocol**—Transport protocol for drop profile assignment. • **Index**—Index of the indicated object. Objects that have indexes in this output include schedulers and drop profiles. • **Name**—Name of the drop profile. • **Type**—Type of the drop profile: **discrete** or **interpolated**. • **Fill Level**—Percentage fullness of a queue. • **Drop probability**—Drop probability at this fill level.
Excess Priority	Priority of the excess bandwidth traffic on a scheduler.
Drop profiles	Display the assignment of drop profiles. • **Loss priority**—Packet loss priority for drop profile assignment. • **Protocol**—Transport protocol for drop profile assignment. • **Index**—Index of the indicated object. Objects that have indexes in this output include schedulers and drop profiles. • **Name**—Name of the drop profile. • **Type**—Type of the drop profile: **discrete** or **interpolated**. • **Fill Level**—Percentage fullness of a queue. • **Drop probability**—Drop probability at this fill level.

Copyright © 2018, Juniper Networks, Inc.

Table 148: show class-of-service interface Output Fields (continued)

Field Name	Field Description

Adjustment information	Display the assignment of shaping-rate adjustments on a scheduler node or queue.
	• **Adjusting application**—Application that is performing the shaping-rate adjustment.
	  ◦ The adjusting application can appear as **ancp LS-0**, which is the Junos OS Access Node Control Profile process (**ancpd**) that performs shaping-rate adjustments on schedule nodes.
	  ◦ The adjusting application can appear as **DHCP**, which adjusts the shaping-rate and overhead-accounting class-of-service attributes based on DHCP option 82, suboption 9 (Vendor Specific Information). The shaping rate is based on the actual-data-rate-downstream attribute. The overhead accounting value is based on the access-loop-encapsulation attribute and specifies whether the access loop uses Ethernet (frame mode) or ATM (cell mode).
	  ◦ The adjusting application can also appear as **pppoe**, which adjusts the shaping-rate and overhead-accounting class-of-service attributes on dynamic subscriber interfaces in a broadband access network based on access line parameters in Point-to-Point Protocol over Ethernet (PPPoE) Tags [TR-101]. This feature is supported on MPC/MIC interfaces on MX Series routers. The shaping rate is based on the actual-data-rate-downstream attribute. The overhead accounting value is based on the access-loop-encapsulation attribute and specifies whether the access loop uses Ethernet (frame mode) or ATM (cell mode).
	• **Adjustment type**—Type of adjustment: **absolute** or **delta**.
	• **Configured shaping rate**—Shaping rate configured for the scheduler node or queue.
	• **Adjustment value**—Value of adjusted shaping rate.
	• **Adjustment target**—Level of shaping-rate adjustment performed: **node** or **queue**.
	• **Adjustment overhead-accounting mode**—Configured shaping mode: **frame** or **cell**.
	• **Adjustment overhead bytes**—Number of bytes that the ANCP agent adds to or subtracts from the actual downstream frame overhead before reporting the adjusted values to CoS.
	• **Adjustment target**—Level of shaping-rate adjustment performed: **node** or **queue**.
	• **Adjustment multicast index**—

Sample Output

show class-of-service interface (Physical)

```
user@host> show class-of-service interface so-0/2/3
```

```
Physical interface: so-0/2/3, Index: 135
Maximum usable queues: 8, Queues in use: 4
Total non-default queues created: 4
  Scheduler map: <default>, Index: 2032638653

  Logical interface: fe-0/0/1.0, Index: 68, Dedicated Queues: no
    Shaping rate: 32000
    Object                  Name                  Type           Index
    Scheduler-map           <default>                             27
    Rewrite                 exp-default           exp             21
    Classifier              exp-default           exp             5
    Classifier              ipprec-compatibility  ip              8
    Forwarding-class-map    exp-default           exp             5
```

show class-of-service interface (Logical)

```
user@host> show class-of-service interface so-0/2/3.0
```

```
Logical interface: so-0/2/3.0, Index: 68, Dedicated Queues: no
    Shaping rate: 32000
    Object                  Name                  Type            Index
    Scheduler-map           <default>                              27
    Rewrite                 exp-default           exp              21
    Classifier              exp-default           exp              5
    Classifier              ipprec-compatibility  ip               8
    Forwarding-class-map    exp-default           exp              5
```

show class-of-service interface (Gigabit Ethernet)

```
user@host> show class-of-service interface ge-6/2/0
```

```
Physical interface: ge-6/2/0, Index: 175
Maximum usable queues: 4, Queues in use: 4
  Scheduler map: <default>, Index: 2
  Input scheduler map: <default>, Index: 3
  Chassis scheduler map: <default-chassis>, Index: 4
```

show class-of-service interface (ANCP)

```
user@host> show class-of-service interface pp0.1073741842
```

```
  Logical interface: pp0.1073741842, Index: 341
Object                  Name                    Type                    Index
Traffic-control-profile TCP-CVLAN               Output                  12408
Classifier              dscp-ipv6-compatibility dscp-ipv6                   9
Classifier              ipprec-compatibility    ip                         13

    Adjusting application: ancp LS-0
      Adjustment type: absolute
      Configured shaping rate: 4000000
      Adjustment value: 11228000
      Adjustment overhead-accounting mode: Frame Mode
      Adjustment overhead bytes: 50
      Adjustment target: node
```

show class-of-service interface (PPPoE Interface)

```
user@host> show class-of-service interface pp0.1
```

```
Logical interface: pp0.1, Index: 85
    Object                  Name                    Type           Index
    Traffic-control-profile tcp-pppoe.o.pp0.1       Output         2726446535
    Classifier              ipprec-compatibility    ip             13

    Adjusting application: PPPoE
      Adjustment type: absolute
      Adjustment value: 5000000
      Adjustment overhead-accounting mode: cell
      Adjustment target: node
```

show class-of-service interface (DHCP Interface)

```
user@host> show class-of-service interface demux0.1
```

```
Logical interface: pp0.1, Index: 85
    Object                  Name                    Type           Index
    Traffic-control-profile tcp-dhcp.o.demux0.1     Output         2726446535
```


Copyright © 2018, Juniper Networks, Inc.

```
    Classifier              ipprec-compatibility   ip             13

    Adjusting application: DHCP
      Adjustment type: absolute
      Adjustment value: 5000000
      Adjustment overhead-accounting mode: cell
      Adjustment target: node
```

show class-of-service interface (T4000 Routers with Type 5 FPCs)

user@host> **show class-of-service interface xe-4/0/0**

```
Physical interface: xe-4/0/0, Index: 153
    Maximum usable queues: 8, Queues in use: 4
      Shaping rate: 5000000000 bps
      Scheduler map: <default>, Index: 2
      Congestion-notification: Disabled

      Logical interface: xe-4/0/0.0, Index: 77
        Object                  Name                   Type
Index
        Classifier              ipprec-compatibility   ip
  13
```

show class-of-service interface detail

user@host> **show class-of-service interface ge-0/3/0 detail**

```
Physical interface: ge-0/3/0, Enabled, Physical link is Up
  Link-level type: Ethernet, MTU: 1518, Speed: 1000mbps, Loopback: Disabled,
Source filtering: Disabled, Flow control: Enabled, Auto-negotiation: Enabled,
Remote fault: Online
  Device flags   : Present Running
  Interface flags: SNMP-Traps Internal: 0x4000

  Physical interface: ge-0/3/0, Index: 138
  Maximum usable queues: 4, Queues in use: 5
  Shaping rate: 50000 bps
  Scheduler map: interface-schedular-map, Index: 58414
  Input shaping rate: 10000 bps
  Input scheduler map: schedular-map, Index: 15103
  Chassis scheduler map: <default-chassis>, Index: 4
  Congestion-notification: Disabled

  Logical interface ge-0/3/0.0
    Flags: SNMP-Traps 0x4000 VLAN-Tag [ 0x8100.1 ]  Encapsulation: ENET2
    inet
    mpls
Interface       Admin Link Proto Input Filter         Output Filter
ge-0/3/0.0      up    up   inet
                           mpls
Interface       Admin Link Proto Input Policer         Output Policer
ge-0/3/0.0      up    up   inet
                           mpls

  Logical interface: ge-0/3/0.0, Index: 68
    Object                  Name                   Type               Index
    Rewrite                 exp-default            exp (mpls-any)       33
```

```
    Classifier              exp-default            exp                  10
    Classifier              ipprec-compatibility   ip                   13


  Logical interface ge-0/3/0.1
    Flags: SNMP-Traps 0x4000 VLAN-Tag [ 0x8100.2 ]  Encapsulation: ENET2
    inet
Interface       Admin Link Proto Input Filter         Output Filter
ge-0/3/0.1      up    up   inet
Interface       Admin Link Proto Input Policer         Output Policer
ge-0/3/0.1      up    up   inet

  Logical interface: ge-0/3/0.1, Index: 69
    Object                  Name                   Type            Index
    Classifier              ipprec-compatibility   ip               13
```

show class-of-service interface comprehensive

user@host> **show class-of-service interface ge-0/3/0 comprehensive**

```
Physical interface: ge-0/3/0, Enabled, Physical link is Up
  Interface index: 138, SNMP ifIndex: 601, Generation: 141
  Link-level type: Ethernet, MTU: 1518, Speed: 1000mbps, BPDU Error: None,
MAC-REWRITE Error: None, Loopback: Disabled, Source filtering: Disabled, Flow
control: Enabled,
  Auto-negotiation: Enabled, Remote fault: Online
  Device flags   : Present Running
  Interface flags: SNMP-Traps Internal: 0x4000
  CoS queues     : 4 supported, 4 maximum usable queues
  Schedulers     : 256
  Hold-times     : Up 0 ms, Down 0 ms
  Current address: 00:14:f6:f4:b4:5d, Hardware address: 00:14:f6:f4:b4:5d
  Last flapped   : 2010-09-07 06:35:22 PDT (15:14:42 ago)
  Statistics last cleared: Never  Exclude Overhead Bytes: Disabled
  Traffic statistics:
   Input  bytes  :                   0                    0 bps
   Output bytes  :                   0                    0 bps
   Input  packets:                   0                    0 pps
   Output packets:                   0                    0 pps
   IPv6 total statistics:
    Input  bytes  :                  0
    Output bytes  :                  0
    Input  packets:                  0
    Output packets:                  0
  Ingress traffic statistics at Packet Forwarding Engine:
   Input  bytes  :                   0                    0 bps
   Input  packets:                   0                    0 pps
   Drop   bytes  :                   0                    0 bps
   Drop   packets:                   0                    0 pps
  Label-switched interface (LSI) traffic statistics:
   Input  bytes  :                   0                    0 bps
   Input  packets:                   0                    0 pps
  Input errors:
    Errors: 0, Drops: 0, Framing errors: 0, Runts: 0, Policed discards: 0, L3
incompletes: 0, L2 channel errors: 0, L2 mismatch timeouts: 0, FIFO errors: 0,
Resource errors: 0
  Output errors:
    Carrier transitions: 5, Errors: 0, Drops: 0, Collisions: 0, Aged packets: 0,
 FIFO errors: 0, HS link CRC errors: 0, MTU errors: 0, Resource errors: 0
  Ingress queues: 4 supported, 5 in use
```


Copyright © 2018, Juniper Networks, Inc.

```
  Queue counters:       Queued packets  Transmitted packets      Dropped packets

    0 af3                           0                    0                    0

    1 af2                           0                    0                    0

    2 ef2                           0                    0                    0

    3 ef1                           0                    0                    0

  Egress queues: 4 supported, 5 in use
  Queue counters:       Queued packets  Transmitted packets      Dropped packets

    0 af3                           0                    0                    0

    1 af2                           0                    0                    0

    2 ef2                           0                    0                    0

    3 ef1                           0                    0                    0

  Active alarms  : None
  Active defects : None
  MAC statistics:                      Receive         Transmit
    Total octets                             0                0
    Total packets                            0                0
    Unicast packets                          0                0
    Broadcast packets                        0                0
    Multicast packets                        0                0
    CRC/Align errors                         0                0
    FIFO errors                              0                0
    MAC control frames                       0                0
    MAC pause frames                         0                0
    Oversized frames                         0
    Jabber frames                            0
    Fragment frames                          0
    VLAN tagged frames                       0
    Code violations                          0
  Filter statistics:
    Input packet count                       0
    Input packet rejects                     0
    Input DA rejects                         0
    Input SA rejects                         0
    Output packet count                                       0
    Output packet pad count                                   0
    Output packet error count                                 0
    CAM destination filters: 0, CAM source filters: 0
  Autonegotiation information:
    Negotiation status: Complete
    Link partner:
       Link mode: Full-duplex, Flow control: Symmetric/Asymmetric, Remote fault:
 OK
    Local resolution:
      Flow control: Symmetric, Remote fault: Link OK
  Packet Forwarding Engine configuration:
    Destination slot: 0
  CoS information:
    Direction : Output
    CoS transmit queue                Bandwidth                Buffer Priority
Limit
```

```
                              %            bps     %           usec
    2 ef2                    39          19500     0            120     high
none
    Direction : Input
    CoS transmit queue               Bandwidth               Buffer Priority
Limit
                              %            bps     %           usec
    0 af3                    30           3000    45              0      low
none

Physical interface: ge-0/3/0, Enabled, Physical link is Up
  Interface index: 138, SNMP ifIndex: 601
Forwarding classes: 16 supported, 5 in use
Ingress queues: 4 supported, 5 in use
Queue: 0, Forwarding classes: af3
  Queued:
    Packets              :                     0                     0 pps
    Bytes                :                     0                     0 bps
  Transmitted:
    Packets              :                     0                      0 pps
    Bytes                :                     0                     0 bps
    Tail-dropped packets : Not Available
    RED-dropped packets  :                     0                     0 pps
    RED-dropped bytes    :                     0                     0 bps
Queue: 1, Forwarding classes: af2
  Queued:
    Packets              :                     0                     0 pps
    Bytes                :                     0                     0 bps
  Transmitted:
    Packets              :                     0                      0 pps
    Bytes                :                     0                     0 bps
    Tail-dropped packets : Not Available
    RED-dropped packets  :                     0                     0 pps
    RED-dropped bytes    :                     0                     0 bps
Queue: 2, Forwarding classes: ef2
  Queued:
    Packets              :                     0                     0 pps
    Bytes                :                     0                     0 bps
  Transmitted:
    Packets              :                     0                      0 pps
    Bytes                :                     0                     0 bps
    Tail-dropped packets : Not Available
    RED-dropped packets  :                     0                     0 pps
    RED-dropped bytes    :                     0                     0 bps
Queue: 3, Forwarding classes: ef1
  Queued:
    Packets              :                     0                     0 pps
    Bytes                :                     0                     0 bps
  Transmitted:
    Packets              :                     0                      0 pps
    Bytes                :                     0                     0 bps
    Tail-dropped packets : Not Available
    RED-dropped packets  :                     0                     0 pps
    RED-dropped bytes    :                     0                     0 bps
Forwarding classes: 16 supported, 5 in use
Egress queues: 4 supported, 5 in use
Queue: 0, Forwarding classes: af3
  Queued:
    Packets              :                     0                     0 pps
    Bytes                :                     0                     0 bps
```


Copyright © 2018, Juniper Networks, Inc.

```
  Transmitted:
    Packets              :                    0                     0 pps
    Bytes                :                    0                     0 bps
    Tail-dropped packets : Not Available
    RL-dropped packets   :                    0                     0 pps
    RL-dropped bytes     :                    0                     0 bps
    RED-dropped packets  :                    0                     0 pps
    RED-dropped bytes    :                    0                     0 bps
Queue: 1, Forwarding classes: af2
  Queued:
    Packets              :                    0                     0 pps
    Bytes                :                    0                     0 bps
  Transmitted:
    Packets              :                    0                     0 pps
    Bytes                :                    0                     0 bps
    Tail-dropped packets : Not Available
    RL-dropped packets   :                    0                     0 pps
    RL-dropped bytes     :                    0                     0 bps
    RED-dropped packets  :                    0                     0 pps
    RED-dropped bytes    :                    0                     0 bps
Queue: 2, Forwarding classes: ef2
  Queued:
    Packets              :                    0                     0 pps
    Bytes                :                    0                     0 bps
  Transmitted:
    Packets              :                    0                     0 pps
    Bytes                :                    0                     0 bps
    Tail-dropped packets : Not Available
    RL-dropped packets   :                    0                     0 pps
    RL-dropped bytes     :                    0                     0 bps
    RED-dropped packets  :                    0                     0 pps
    RED-dropped bytes    :                    0                     0 bps
Queue: 3, Forwarding classes: ef1
  Queued:
    Packets              :                    0                     0 pps
    Bytes                :                    0                     0 bps
  Transmitted:
    Packets              :                    0                     0 pps
    Bytes                :                    0                     0 bps
    Tail-dropped packets : Not Available
    RL-dropped packets   :                    0                     0 pps
    RL-dropped bytes     :                    0                     0 bps
    RED-dropped packets  :                    0                     0 pps
    RED-dropped bytes    :                    0                     0 bps

Packet Forwarding Engine Chassis Queues:
Queues: 4 supported, 5 in use
Queue: 0, Forwarding classes: af3
  Queued:
    Packets              :                    0                     0 pps
    Bytes                :                    0                     0 bps
  Transmitted:
    Packets              :                    0                     0 pps
    Bytes                :                    0                     0 bps
    Tail-dropped packets :                    0                     0 pps
    RED-dropped packets  : Not Available
    RED-dropped bytes    : Not Available
Queue: 1, Forwarding classes: af2
  Queued:
    Packets              :                    0                     0 pps
```

```
    Bytes                :                     0                     0 bps
  Transmitted:
    Packets              :                     0                      0 pps
    Bytes                :                     0                     0 bps
    Tail-dropped packets :                     0                     0 pps
    RED-dropped packets  : Not Available
    RED-dropped bytes    : Not Available
Queue: 2, Forwarding classes: ef2
  Queued:
    Packets              :                     0                     0 pps
    Bytes                :                     0                     0 bps
  Transmitted:
    Packets              :                     0                      0 pps
    Bytes                :                     0                     0 bps
    Tail-dropped packets :                     0                     0 pps
    RED-dropped packets  : Not Available
    RED-dropped bytes    : Not Available
Queue: 3, Forwarding classes: ef1
  Queued:
    Packets              :                108546                     0 pps
    Bytes                :              12754752                   376 bps
  Transmitted:
    Packets              :                108546                      0 pps
    Bytes                :              12754752                   376 bps
    Tail-dropped packets :                     0                     0 pps
    RED-dropped packets  : Not Available
    RED-dropped bytes    : Not Available

Physical interface: ge-0/3/0, Index: 138
Maximum usable queues: 4, Queues in use: 5
  Shaping rate: 50000 bps

Scheduler map: interface-schedular-map, Index: 58414

  Scheduler: ef2, Forwarding class: ef2, Index: 39155
    Transmit rate: 39 percent, Rate Limit: none, Buffer size: 120 us, Buffer
Limit: none, Priority: high
    Excess Priority: unspecified
    Drop profiles:
      Loss priority   Protocol    Index    Name
      Low             any             1    < default-drop-profile>
      Medium low      any             1    < default-drop-profile>
      Medium high     any             1    < default-drop-profile>
      High            any             1    < default-drop-profile>
Drop profile: < default-drop-profile>, Type: discrete, Index: 1
  Fill level    Drop probability
        100                 100
Drop profile: < default-drop-profile>, Type: discrete, Index: 1
  Fill level    Drop probability
        100                 100
Drop profile: < default-drop-profile>, Type: discrete, Index: 1
  Fill level    Drop probability
        100                 100
Drop profile: < default-drop-profile>, Type: discrete, Index: 1
  Fill level    Drop probability
        100                 100
  Input shaping rate: 10000 bps
  Input scheduler map: schedular-map

Scheduler map: schedular-map, Index: 15103
```


Copyright © 2018, Juniper Networks, Inc.

```
  Scheduler: af3, Forwarding class: af3, Index: 35058
    Transmit rate: 30 percent, Rate Limit: none, Buffer size: 45 percent, Buffer
 Limit: none, Priority: low
    Excess Priority: unspecified
    Drop profiles:
      Loss priority   Protocol    Index    Name
      Low             any         40582    green
      Medium low      any             1    < default-drop-profile>
      Medium high     any             1    < default-drop-profile>
      High            any         18928    yellow
Drop profile: green, Type: discrete, Index: 40582
  Fill level    Drop probability
          50                   0
         100                 100
Drop profile: < default-drop-profile>, Type: discrete, Index: 1
  Fill level    Drop probability
         100                 100
Drop profile: < default-drop-profile>, Type: discrete, Index: 1
  Fill level    Drop probability
         100                 100
Drop profile: yellow, Type: discrete, Index: 18928
  Fill level    Drop probability
          50                   0
         100                 100
  Chassis scheduler map: < default-drop-profile>
Scheduler map: < default-drop-profile>, Index: 4

  Scheduler: < default-drop-profile>, Forwarding class: af3, Index: 25
    Transmit rate: 25 percent, Rate Limit: none, Buffer size: 25 percent, Buffer
 Limit: none, Priority: low
    Excess Priority: low
    Drop profiles:
      Loss priority   Protocol    Index    Name
      Low             any             1    < default-drop-profile>
      Medium low      any             1    < default-drop-profile>
      Medium high     any             1    < default-drop-profile>
      High            any             1    < default-drop-profile>
Drop profile: < default-drop-profile>, Type: discrete, Index: 1
  Fill level    Drop probability
         100                 100
Drop profile: < default-drop-profile>, Type: discrete, Index: 1
  Fill level    Drop probability
         100                 100
Drop profile: < default-drop-profile>, Type: discrete, Index: 1
  Fill level    Drop probability
         100                 100
Drop profile: < default-drop-profile>, Type: discrete, Index: 1
  Fill level    Drop probability
         100                 100

  Scheduler: < default-drop-profile>, Forwarding class: af2, Index: 25
    Transmit rate: 25 percent, Rate Limit: none, Buffer size: 25 percent, Buffer
 Limit: none, Priority: low
    Excess Priority: low
    Drop profiles:
      Loss priority   Protocol    Index    Name
      Low             any             1    < default-drop-profile>
      Medium low      any             1    < default-drop-profile>
      Medium high     any             1    < default-drop-profile>
```

```
      High            any             1    < default-drop-profile>
Drop profile: < default-drop-profile>, Type: discrete, Index: 1
  Fill level    Drop probability
         100                 100
Drop profile: < default-drop-profile>, Type: discrete, Index: 1
  Fill level    Drop probability
         100                 100
Drop profile: < default-drop-profile>, Type: discrete, Index: 1
  Fill level    Drop probability
         100                 100
Drop profile: < default-drop-profile>, Type: discrete, Index: 1
  Fill level    Drop probability
         100                 100

  Scheduler: < default-drop-profile>, Forwarding class: ef2, Index: 25
    Transmit rate: 25 percent, Rate Limit: none, Buffer size: 25 percent, Buffer
 Limit: none, Priority: low
    Excess Priority: low
    Drop profiles:
      Loss priority   Protocol    Index    Name
      Low             any             1    < default-drop-profile>
      Medium low      any             1    < default-drop-profile>
      Medium high     any             1    < default-drop-profile>
      High            any             1    < default-drop-profile>
Drop profile: < default-drop-profile>, Type: discrete, Index: 1
  Fill level    Drop probability
         100                 100
Drop profile: < default-drop-profile>, Type: discrete, Index: 1
  Fill level    Drop probability
         100                 100
Drop profile: < default-drop-profile>, Type: discrete, Index: 1
  Fill level    Drop probability
         100                 100
Drop profile: < default-drop-profile>, Type: discrete, Index: 1
  Fill level    Drop probability
         100                 100

  Scheduler: < default-drop-profile>, Forwarding class: ef1, Index: 25
    Transmit rate: 25 percent, Rate Limit: none, Buffer size: 25 percent, Buffer
 Limit: none, Priority: low
    Excess Priority: low
    Drop profiles:
      Loss priority   Protocol    Index    Name
      Low             any             1    < default-drop-profile>
      Medium low      any             1    < default-drop-profile>
      Medium high     any             1    < default-drop-profile>
      High            any             1    < default-drop-profile>
Drop profile: , Type: discrete, Index: 1
  Fill level    Drop probability
         100                 100
Drop profile: < default-drop-profile>, Type: discrete, Index: 1
  Fill level    Drop probability
         100                 100
Drop profile: < default-drop-profile>, Type: discrete, Index: 1
  Fill level    Drop probability
         100                 100
Drop profile: < default-drop-profile>, Type: discrete, Index: 1
  Fill level    Drop probability
         100                 100
  Congestion-notification: Disabled
```


Copyright © 2018, Juniper Networks, Inc.

```
Forwarding class                       ID      Queue  Restricted queue  Fabric
priority  Policing priority
  af3                                   0       0          0             low
            normal
  af2                                   1       1          1             low
            normal
  ef2                                   2       2          2             high
            normal
  ef1                                   3       3          3             high
            normal
  af1                                   4       4          0             low
            normal

  Logical interface ge-0/3/0.0 (Index 68) (SNMP ifIndex 152) (Generation 159)
    Flags: SNMP-Traps 0x4000 VLAN-Tag [ 0x8100.1 ]  Encapsulation: ENET2
    Traffic statistics:
     Input  bytes  :                    0
     Output bytes  :                    0
     Input  packets:                    0
     Output packets:                    0
    Local statistics:
     Input  bytes  :                    0
     Output bytes  :                    0
     Input  packets:                    0
     Output packets:                    0
    Transit statistics:
     Input  bytes  :                    0                    0 bps
     Output bytes  :                    0                    0 bps
     Input  packets:                    0                    0 pps
     Output packets:                    0                    0 pps
    Protocol inet, MTU: 1500, Generation: 172, Route table: 0
      Flags: Sendbcast-pkt-to-re
      Input Filters: filter-in-ge-0/3/0.0-i,
      Policer: Input: p1-ge-0/3/0.0-inet-i
    Protocol mpls, MTU: 1488, Maximum labels: 3, Generation: 173, Route table: 0

      Flags: Is-Primary
      Output Filters: exp-filter,,,,,

Logical interface ge-1/2/0.0 (Index 347) (SNMP ifIndex 638) (Generation 156)

Forwarding class ID  Queue  Restricted queue  Fabric priority  Policing priority
   SPU priority
best-effort      0   0      0                 low              normal
    low

Aggregate Forwarding-class statistics per forwarding-class
  Aggregate Forwarding-class statistics:
   Forwarding-class statistics:

Forwarding-class best-effort statistics:
    Input unicast bytes:      0
    Output unicast bytes:     0
    Input unicast packets:    0
    Output unicast packets:   0

    Input multicast bytes:    0
    Output multicast bytes:   0
    Input multicast packets:  0
    Output multicast packets: 0
```

```
Forwarding-class expedited-forwarding statistics:
    Input unicast bytes:      0
    Output unicast bytes:     0
    Input unicast packets:    0
    Output unicast packets:   0

    Input multicast bytes:    0
    Output multicast bytes:   0
    Input multicast packets:  0
    Output multicast packets: 0

IPv4 protocol forwarding-class statistics:
  Forwarding-class statistics:
  Forwarding-class best-effort statistics:

    Input unicast bytes:      0
    Output unicast bytes:     0
    Input unicast packets:    0
    Output unicast packets:   0

    Input multicast bytes:    0
    Output multicast bytes:   0
    Input multicast packets:  0
    Output multicast packets: 0

Forwarding-class expedited-forwarding statistics:
    Input unicast bytes:      0
    Output unicast bytes:     0
    Input unicast packets:    0
    Output unicast packets:   0

    Input multicast bytes:    0
    Output multicast bytes:   0
    Input multicast packets:  0
    Output multicast packets: 0

    IPv6  protocol forwarding-class statistics:
    Forwarding-class statistics:
     Forwarding-class best-effort statistics:

    Input unicast bytes:      0
    Output unicast bytes:     0
    Input unicast packets:    0
    Output unicast packets:   0

    Input multicast bytes:    0
    Output multicast bytes:   0
    Input multicast packets:  0
    Output multicast packets: 0

Forwarding-class expedited-forwarding statistics:
    Input unicast bytes:      0
    Output unicast bytes:     0
    Input unicast packets:    0
    Output unicast packets:   0

    Input multicast bytes:    0
    Output multicast bytes:   0
    Input multicast packets:  0
```


Copyright © 2018, Juniper Networks, Inc.

```
    Output multicast packets: 0

Logical interface ge-0/3/0.0 (Index 68) (SNMP ifIndex 152)
    Flags: SNMP-Traps 0x4000 VLAN-Tag [ 0x8100.1 ]  Encapsulation: ENET2
    Input packets : 0
    Output packets: 0

Interface       Admin Link Proto Input Filter         Output Filter
ge-0/3/0.0      up    up   inet  filter-in-ge-0/3/0.0-i
                           mpls                       exp-filter
Interface       Admin Link Proto Input Policer         Output Policer
ge-0/3/0.0      up    up
                           inet  p1-ge-0/3/0.0-inet-i
                           mpls

Filter: filter-in-ge-0/3/0.0-i
Counters:
Name                                                Bytes              Packets
count-filter-in-ge-0/3/0.0-i                            0                    0

Filter: exp-filter
Counters:
Name                                                Bytes              Packets
count-exp-seven-match                                   0                    0
count-exp-zero-match                                    0                    0
Policers:
Name                                               Packets
p1-ge-0/3/0.0-inet-i                                    0


  Logical interface: ge-0/3/0.0, Index: 68
    Object                 Name                   Type                    Index

    Rewrite                exp-default            exp (mpls-any)            33

Rewrite rule: exp-default, Code point type: exp, Index: 33
  Forwarding class                    Loss priority       Code point
  af3                                 low                 000
  af3                                 high                001
  af2                                 low                 010
  af2                                 high                011
  ef2                                 low                 100
  ef2                                 high                101
  ef1                                 low                 110
  ef1                                 high                111
    Object                 Name                   Type                    Index

    Classifier             exp-default            exp                       10

Classifier: exp-default, Code point type: exp, Index: 10
  Code point         Forwarding class                    Loss priority
  000                af3                                 low
  001                af3                                 high
  010                af2                                 low
  011                af2                                 high
  100                ef2                                 low
  101                ef2                                 high
  110                ef1                                 low
  111                ef1                                 high
    Object                 Name                   Type                    Index
```

```
    Classifier             ipprec-compatibility   ip                        13

Classifier: ipprec-compatibility, Code point type: inet-precedence, Index: 13
  Code point         Forwarding class                    Loss priority
  000                af3                                 low
  001                af3                                 high
  010                af3                                 low
  011                af3                                 high
  100                af3                                 low
  101                af3                                 high
  110                ef1                                 low
  111                ef1                                 high
Forwarding class                       ID      Queue  Restricted queue  Fabric
priority  Policing priority
  af3                                   0       0          0             low
            normal
  af2                                   1       1          1             low
            normal
  ef2                                   2       2          2             high
            normal
  ef1                                   3       3          3             high
            normal
  af1                                   4       4          0             low
            normal

  Logical interface ge-0/3/0.1 (Index 69) (SNMP ifIndex 154) (Generation 160)
    Flags: SNMP-Traps 0x4000 VLAN-Tag [ 0x8100.2 ]  Encapsulation: ENET2
    Traffic statistics:
     Input  bytes  :                    0
     Output bytes  :                    0
     Input  packets:                    0
     Output packets:                    0
    Local statistics:
     Input  bytes  :                    0
     Output bytes  :                    0
     Input  packets:                    0
     Output packets:                    0
    Transit statistics:
     Input  bytes  :                    0                    0 bps
     Output bytes  :                    0                    0 bps
     Input  packets:                    0                    0 pps
     Output packets:                    0                    0 pps
    Protocol inet, MTU: 1500, Generation: 174, Route table: 0
      Flags: Sendbcast-pkt-to-re

  Logical interface ge-0/3/0.1 (Index 69) (SNMP ifIndex 154)
    Flags: SNMP-Traps 0x4000 VLAN-Tag [ 0x8100.2 ]  Encapsulation: ENET2
    Input packets : 0
    Output packets: 0


Interface       Admin Link Proto Input Filter         Output Filter
ge-0/3/0.1      up    up   mpls
Interface       Admin Link Proto Input Policer         Output Policer
ge-0/3/0.1      up    up
                           mpls

  Logical interface: ge-0/3/0.1, Index: 69
    Object                  Name                    Type                    Index
```


Copyright © 2018, Juniper Networks, Inc.

```
    Classifier              ipprec-compatibility   ip                        13

Classifier: ipprec-compatibility, Code point type: inet-precedence, Index: 13
  Code point         Forwarding class                    Loss priority
  000                af3                                 low
  001                af3                                 high
  010                af3                                 low
  011                af3                                 high
  100                af3                                 low
  101                af3                                 high
  110                ef1                                 low
  111                ef1                                 high
Forwarding class                       ID      Queue  Restricted queue  Fabric
priority  Policing priority
  af3                                   0       0          0             low
            normal
  af2                                   1       1          1             low
            normal
  ef2                                   2       2          2             high
            normal
  ef1                                   3       3          3             high
            normal
  af1                                   4       4          0             low
            normal
```

show class-of-service interface (ACX Series Routers)

```
user@host-g11# show class-of-service interface
```

```
Physical interface: at-0/0/0, Index: 130
Maximum usable queues: 4, Queues in use: 4
  Scheduler map: <default>, Index: 2
  Congestion-notification: Disabled

  Logical interface: at-0/0/0.0, Index: 69

  Logical interface: at-0/0/0.32767, Index: 70

Physical interface: at-0/0/1, Index: 133
Maximum usable queues: 4, Queues in use: 4
  Scheduler map: <default>, Index: 2
  Congestion-notification: Disabled

  Logical interface: at-0/0/1.0, Index: 71

  Logical interface: at-0/0/1.32767, Index: 72

Physical interface: ge-0/1/0, Index: 146
Maximum usable queues: 8, Queues in use: 5
  Scheduler map: <default>, Index: 2
  Congestion-notification: Disabled
Object                  Name                  Type                    Index
Rewrite                 dscp-default          dscp                       31
Classifier              d1                    dscp                    11331
Classifier              ci                    ieee8021p                 583

  Logical interface: ge-0/1/0.0, Index: 73
```

```
Object                  Name                    Type                    Index
Rewrite                 custom-exp              exp (mpls-any)          46413

  Logical interface: ge-0/1/0.1, Index: 74

  Logical interface: ge-0/1/0.32767, Index: 75

Physical interface: ge-0/1/1, Index: 147
Maximum usable queues: 8, Queues in use: 5
  Scheduler map: <default>, Index: 2
  Congestion-notification: Disabled
Object                  Name                    Type                    Index
Classifier              ipprec-compatibility    ip                         13

  Logical interface: ge-0/1/1.0, Index: 76

Physical interface: ge-0/1/2, Index: 148
Maximum usable queues: 8, Queues in use: 5
  Scheduler map: <default>, Index: 2
  Congestion-notification: Disabled
Object                  Name                    Type                    Index
Rewrite                 ri                      ieee8021p (outer)       35392
Classifier              ci                      ieee8021p                 583

Physical interface: ge-0/1/3, Index: 149
Maximum usable queues: 8, Queues in use: 5
  Scheduler map: <default>, Index: 2
  Congestion-notification: Disabled
Object                  Name                    Type                    Index
Classifier              ipprec-compatibility    ip                         13

  Logical interface: ge-0/1/3.0, Index: 77
Object                  Name                    Type                    Index
Rewrite                 custom-exp2             exp (mpls-any)          53581

Physical interface: ge-0/1/4, Index: 150
Maximum usable queues: 8, Queues in use: 5
  Scheduler map: <default>, Index: 2
  Congestion-notification: Disabled
Object                  Name                    Type                    Index
Classifier              ipprec-compatibility    ip                         13

Physical interface: ge-0/1/5, Index: 151
Maximum usable queues: 8, Queues in use: 5
  Scheduler map: <default>, Index: 2
  Congestion-notification: Disabled
Object                  Name                    Type                    Index
Classifier              ipprec-compatibility    ip                         13

Physical interface: ge-0/1/6, Index: 152
Maximum usable queues: 8, Queues in use: 5
  Scheduler map: <default>, Index: 2
  Congestion-notification: Disabled
Object                  Name                    Type                    Index
Classifier              ipprec-compatibility    ip                         13

Physical interface: ge-0/1/7, Index: 153
Maximum usable queues: 8, Queues in use: 5
  Scheduler map: <default>, Index: 2
  Congestion-notification: Disabled
```


Copyright © 2018, Juniper Networks, Inc.

```
Object                  Name                    Type                    Index
Classifier              d1                      dscp                    11331

Physical interface: ge-0/2/0, Index: 154
Maximum usable queues: 8, Queues in use: 5
  Scheduler map: <default>, Index: 2
  Congestion-notification: Disabled
Object                  Name                    Type                    Index
Classifier              ipprec-compatibility    ip                         13

Physical interface: ge-0/2/1, Index: 155
Maximum usable queues: 8, Queues in use: 5
  Scheduler map: <default>, Index: 2
  Congestion-notification: Disabled
Object                  Name                    Type                    Index
Classifier              ipprec-compatibility    ip                         13

  Logical interface: ge-0/2/1.0, Index: 78

  Logical interface: ge-0/2/1.32767, Index: 79

Physical interface: xe-0/3/0, Index: 156
Maximum usable queues: 8, Queues in use: 5
  Scheduler map: <default>, Index: 2
  Congestion-notification: Disabled
Object                  Name                    Type                    Index
Classifier              ipprec-compatibility    ip                         13

  Logical interface: xe-0/3/0.0, Index: 80

Physical interface: xe-0/3/1, Index: 157
Maximum usable queues: 8, Queues in use: 5
  Scheduler map: <default>, Index: 2
  Congestion-notification: Disabled
Object                  Name                    Type                    Index
Classifier              ipprec-compatibility    ip                         13

  Logical interface: xe-0/3/1.0, Index: 81

[edit]
user@host-g11#
```

show class-of-service interface (PPPoE Subscriber Interface for Enhanced Subscriber Management)

user@host> **show class-of-service interface pp0.3221225474**

```
  Logical interface: pp0.3221225475, Index: 3221225475
Object                  Name                    Type                    Index
Traffic-control-profile TC_PROF_100_199_SERIES_UID1006 Output      4294967312
Scheduler-map           SMAP-1_UID1002          Output              4294967327
Rewrite-Output          ieee-rewrite            ieee8021p               60432
Rewrite-Output          rule1                   ip                      50463

    Adjusting application: PPPoE IA tags
      Adjustment type: absolute
      Configured shaping rate: 11000000
      Adjustment value: 5000000
      Adjustment target: node

    Adjusting application: ucac
```

```
    Adjustment type: delta
    Configured shaping rate: 5000000
    Adjustment value: 100000
    Adjustment target: node
```


Copyright © 2018, Juniper Networks, Inc.

show pfe next-hop

List of Syntax

Syntax on page 801
Syntax (TX Matrix and TX Matrix Plus Routers) on page 801

Syntax

```
show pfe next-hop
<interface interface-name>
```

Syntax (TX Matrix and TX Matrix Plus Routers)

```
show pfe next-hop
<fpc slot>
<interface interface-name>
<lcc number>
```

Release Information

Command introduced before Junos OS Release 7.4.
Command introduced in Junos OS Release 9.0 for EX Series switches.
Command introduced in Junos OS Release 11.1 for the QFX Series.
Command introduced in Junos OS Release 14.1X53-D20 for the OCX Series.

Description

Display Packet Forwarding Engine next-hop information.

Options

none—Display all Packet Forwarding Engine next-hop information.

fpc *slot*—(TX Matrix and TX Matrix Plus routers only) (Optional) Show the next hops for a Flexible PIC Concentrator (FPC) slot.

- On a TX Matrix router, if you specify the number of a T640 router by using the **lcc** *number* option (the recommended method), replace ***slot*** with a value from **0** through **7**. Otherwise, replace ***slot*** with a value from **0** through **31**.
- On a TX Matrix Plus router, if you specify the number of a T1600 router by using the **lcc** *number* option (the recommended method), replace ***slot*** with a value from **0** through **7**. Otherwise, replace ***slot*** with a value from **0** through **31**.
- On a TX Matrix Plus router in the TXP-T1600-3D, TXP-T4000-3D, or TXP-Mixed-LCC-3D configuration, if you specify the number of a T1600 or T4000 router by using the **lcc** *number* option (the recommended method), replace ***slot*** with a value from **0** through **7**. Otherwise, replace ***slot*** with a value from **0** through **63**.

For example, the following commands have the same result:

```
user@host> show pfe next-hop fpc 1 lcc 1
user@host> show pfe next-hop fpc 9
```

interface *interface-name*—(Optional) Display the Packet Forwarding Engine next-hop interface.

lcc *number*—(TX Matrix and TX Matrix Plus routers only) (Optional) On a TX Matrix router, display Packet Forwarding Engine next-hop interface for a specific T640 router (or line-card chassis) that is connected to a TX Matrix router. On a TX Matrix Plus router, display Packet Forwarding Engine next-hop interface for the router (or line-card chassis) that is connected to a TX Matrix Plus router.

Replace *number* with the following values depending on the LCC configuration:

- 0 through 3, when T640 routers are connected to a TX Matrix router in a routing matrix.
- 0 through 3, when T1600 routers are connected to a TX Matrix Plus router in a routing matrix.
- 0 through 7, when T1600 routers are connected to a TX Matrix Plus router with 3D SIBs in a routing matrix.
- 0, 2, 4, or 6, when T4000 routers are connected to a TX Matrix Plus router with 3D SIBs in a routing matrix.

Required Privilege Level

admin

Related Documentation

- *Routing Matrix with TXP-T1600 Configuration*
- *Routing Matrix with TXP-T1600-3D Configuration*
- *Routing Matrix with TXP-T4000-3D Configuration*
- *Routing Matrix with a TXP-Mixed-LCC-3D Configuration*

List of Sample Output

show pfe next-hop on page 803
show pfe next-hop fpc (TX Matrix Router) on page 803
show pfe next-hop fpc (TX Matrix Plus Router) on page 804

Copyright © 2018, Juniper Networks, Inc.

Output Fields Table 149 on page 803 lists the output fields for the **show pfe next hop** command. Output fields are listed in the approximate order in which they appear.

Table 149: show pfe next-hop Output Fields

Field Name	Field Description
ID	The next-hop ID for the entry.
Type	The next-hop type for the entry.
Interface	The interface to which the next-hop entry is assigned.
Protocol	The protocol type for the next-hop entry.
Encap	Encapsulation type for the next-hop entry.
Next Hop Addr	Next-hop address for the next-hop entry.
MTU	MTU value for the nexthop entry.

Sample Output

show pfe next-hop

```
user@host> show pfe next-hop
Nexthop Info:
   ID      Type      Interface   Protocol         Encap  Next Hop Addr    MTU
-----  --------  -------------  ---------  ------------  ---------------  -----
    4     Mcast  -                  IPv4             -  0.0.0.0              0
    5     Bcast  -                  IPv4             -  -                    0
    7   Discard  -                  IPv4             -  -                    0
    8  MDiscard  -                  IPv4             -  -                    0
    9    Reject  -                  IPv4             -  -                    0
   13     Local  -                  IPv4             -  192.168.4.60         0
   14   Resolve  fxp0.0             IPv4   Unspecified  -                    0
   17     Local  -                  IPv4             -  127.0.0.1            0
   18   Unicast  fxp0.0             IPv4   Unspecified  192.168.4.254        0
   21     Local  -                  IPv4             -  11.1.0.1             0
   22   Unicast  at-0/1/0.0         IPv4      ATM SNAP  11.1.0.2          4482
 ...
```

show pfe next-hop fpc (TX Matrix Router)

```
user@host> show pfe next-hop fpc 1
Slot 1
Nexthop Info:
   ID      Type      Interface    Next Hop Addr    Protocol       Encap     MTU
-----  --------  -------------  ---------------  ----------  ------------  ----
    5     Mcast  -              default               IPv4             -     0
    6     Bcast  -              -                     IPv4             -     0
    8   Discard  -              -                     IPv4             -     0
    9  MDiscard  -              -                     IPv4             -     0
   13     Mcast  -              default               IPV6             -     0
```

```
  17  MDiscard  -             -                     IPV6            -     0
  18    Reject  -             -                     IPV6            -     0
  24   Discard  -             -                     None            -     0
  68     Local  -             192.168.66.113        IPv4            -     0
  69   Resolve  fxp0.0         -                     IPv4   Unspecified     0
  70   Unicast  fxp0.0         192.168.71.254        IPv4   Unspecified     0
 256     Local  -             10.71.71.1            IPv4            -     0
 257     Local  -             127.0.0.1             IPv4            -     0
 258     Mcast.local..1      default               IPv4   Unspecified     0
 259     Bcast.local..1      -                     IPv4   Unspecified     0
 261   Discard.local..1      -                     IPv4   Unspecified     0
 262  MDiscard.local..1      -                     IPv4   Unspecified     0
 269     Mcast.local..1      default               IPV6   Unspecified     0
 271   Discard.local..1      -                     IPV6   Unspecified     0
...
```

show pfe next-hop fpc (TX Matrix Plus Router)

```
user@host> show pfe next-hop fpc 0
```

```
Slot 0

   ID      Type      Interface    Next Hop Addr    Protocol       Encap     MTU
-----  --------  -------------  ---------------  ----------  ------------  ----
   31     Mcast  -              default               IPv4            -     0
   32     Bcast  -              -                     IPv4            -     0
   34   Discard  -              -                     IPv4            -     0
   35  MDiscard  -              -                     IPv4            -     0
   36    Reject  -              -                     IPv4            -     0
   39     Mcast  -              default               IPv6            -     0
   42   Discard  -              -                     IPv6            -     0
   43  MDiscard  -              -                     IPv6            -     0
   44    Reject  -              -                     IPv6            -     0
   49   Receive  -              -                     MPLS            -     0
   50   Discard  -              -                     MPLS            -     0
  111     Mcast  .local..1      default               IPv4   Unspecified     0
  112     Bcast  .local..1      -                     IPv4   Unspecified     0
  114   Discard  .local..1      -                     IPv4   Unspecified     0
  115  MDiscard  .local..1      -                     IPv4   Unspecified     0
  116    Reject  .local..1      -                     IPv4   Unspecified     0
  119     Mcast  .local..1      default               IPv6   Unspecified     0
  122   Discard  .local..1      -                     IPv6   Unspecified     0
  123  MDiscard  .local..1      -                     IPv6   Unspecified     0
  124    Reject  .local..1      -                     IPv6   Unspecified     0
  191     Mcast  .local..2      default               IPv4   Unspecified     0
  192     Bcast  .local..2      -                     IPv4   Unspecified     0
  194   Discard  .local..2      -                     IPv4   Unspecified     0
  195  MDiscard  .local..2      -                     IPv4   Unspecified     0
  196    Reject  .local..2      -                     IPv4   Unspecified     0
  322     Local  -              10.1.0.5              IPv4            -     0
  323   Resolve  bcm0.0         -                     IPv4   Unspecified     0
  326     Local  -              129.0.0.5             IPv4            -     0
  327   Resolve  bcm0.0         -                     IPv4   Unspecified     0
  328     Local  -              fe80::201:ff:fe01:5
                                                      IPv6            -     0
  329   Receive  bcm0.0         ff02::1:ff01:5        IPv6   Unspecified     0
  330   Receive  bcm0.0         fe80::                IPv6   Unspecified     0
  331   Resolve  bcm0.0         -                     IPv6   Unspecified     0
  332     Local  -              fec0::a:1:0:5         IPv6            -     0
```


Copyright © 2018, Juniper Networks, Inc.

```
333   Receive  bcm0.0         ff02::1:ff00:5         IPv6   Unspecified     0
334   Receive  bcm0.0         fec0::                 IPv6   Unspecified     0
335   Resolve  bcm0.0         -                      IPv6   Unspecified     0
348     Local  -              192.168.178.4          IPv4             -     0
349   Resolve  em0.0          -                      IPv4   Unspecified     0
350   Unicast  em0.0          192.168.178.126        IPv4   Unspecified     0
357     Local  -              fe80::201:1ff:fe01:5
                                                     IPv6             -     0
512     Local  -              10.255.178.11          IPv4             -     0
513     Local  -              127.0.0.1              IPv4             -     0
515     Local  -              abcd::10:255:178:11
                                                     IPv6             -     0
516     Local  -              fe80::200:ff:fe00:0
                                                     IPv6             -     0
517     Local  -              127.0.0.1              IPv4             -     0
518     Mcast  .local..3      default                IPv4   Unspecified     0
519     Bcast  .local..3      -                      IPv4   Unspecified     0
521   Discard  .local..3      -                      IPv4   Unspecified     0
522  MDiscard  .local..3      -                      IPv4   Unspecified     0
523    Reject  .local..3      -                      IPv4   Unspecified     0
531     Mcast  .local..3      default                IPv6   Unspecified     0
533   Discard  .local..3      -                      IPv6   Unspecified     0
534  MDiscard  .local..3      -                      IPv6   Unspecified     0
535    Reject  .local..3      -                      IPv6   Unspecified     0
539    Mgroup  -              -                      IPv4             -     0
540     Bcast  ge-15/0/3.0    -                      IPv4      Ethernet     0
541   Receive  ge-15/0/3.0    14.2.1.0               IPv4      Ethernet     0
542     Local  -              14.2.1.1               IPv4             -     0
543   Resolve  ge-15/0/3.0    -                      IPv4      Ethernet     0
544     Bcast  ge-31/0/4.0    -                      IPv4      Ethernet     0
545   Receive  ge-31/0/4.0    14.1.1.0               IPv4      Ethernet     0
546     Local  -              14.1.1.1               IPv4             -     0
547   Resolve  ge-31/0/4.0    -                      IPv4      Ethernet     0
548   Unicast  ge-31/0/4.0    14.1.1.2               IPv4      Ethernet     0
549   Unicast  ge-15/0/3.0    14.2.1.2               IPv4      Ethernet     0
550     Bcast  ae1.0          -                      IPv4      Ethernet     0
551   Receive  ae1.0          11.1.1.0               IPv4      Ethernet     0
552     Local  -              11.1.1.1               IPv4             -     0
553   Resolve  ae1.0          -                      IPv4      Ethernet     0
554   Aggreg.  ae1.0          -                      IPv4      Ethernet     0
555   Unicast  ge-23/0/8.0    11.1.1.2               IPv4      Ethernet     0
556   Unicast  ge-7/0/9.0     11.1.1.2               IPv4      Ethernet     0
557   Aggreg.  ae1.0          -                      MPLS      Ethernet     0
558   Unicast  ge-23/0/8.0    -                      MPLS      Ethernet     0
559   Unicast  ge-7/0/9.0     -                      MPLS      Ethernet     0
560   Aggreg.  ae1.0          -                      MPLS      Ethernet     0
561   Unicast  ge-23/0/8.0    -                      MPLS      Ethernet     0
562   Unicast  ge-7/0/9.0     -                      MPLS      Ethernet     0
```

show pfe route

List of Syntax

Syntax on page 806
Syntax (EX Series Switches) on page 806
Syntax (QFX Series) on page 806
Syntax (MX Series) on page 806
Syntax (TX Matrix and TX Matrix Plus Routers) on page 806

Syntax

```
show pfe route
<<inet6 | ip | iso> <prefix prefix> | <table <table-name>  <index index> <prefix prefix>>>
<mpls>
<summary>
```

Syntax (EX Series Switches)

```
show pfe route
<<inet6 | ip> <prefix prefix> | <table <table-name>  <index index> <prefix prefix>>>
<mpls>
<summary>
```

Syntax (QFX Series)

```
show pfe route
<<inet6 | ip> <prefix prefix> | <table <table-name> <index index> <prefix prefix>> <hw (host
  | lpm | multicast)>>
<<clnp> <prefix prefix> | <table <table-name>  <index index> <prefix prefix>>>
<mpls>
<summary> <hw>
```

Syntax (MX Series)

```
show pfe route
<<inet6 | ip> <prefix prefix> | <table <table-name>  <index index> <prefix prefix>>>
<dhcp>
<mpls>
<summary>
```

Syntax (TX Matrix and TX Matrix Plus Routers)

```
show pfe route
<fpc slot>
<<inet6 | ip | iso> <prefix prefix> | <table <table-name> <index index> <prefix prefix>>>
<lcc number>
<mpls>
<summary>
```

Release Information

Command introduced before Junos OS Release 7.4.
Command introduced in Junos OS Release 9.0 for EX Series switches.
Command introduced in Junos OS Release 11.1 for the QFX Series.
Command introduced in Junos OS Release 13.3 for the MX Series.
Command option **hw** introduced in Junos OS Release 14.1X53-D10 for the QFX Series.
Command introduced in Junos OS Release 14.1X53-D20 for the OCX Series.

Copyright © 2018, Juniper Networks, Inc.

Description Display the routes in the Packet Forwarding Engine forwarding table. The Packet Forwarding Engine forwards packets between input and output interfaces.

NOTE: The Routing Engine maintains a master copy of the forwarding table. It copies the forwarding table to the Packet Forwarding Engine, which is the part of the router or switch responsible for forwarding packets. To display the routes in the Routing Engine forwarding table, use the **show route forwarding table** command. For more information, see the CLI Explorer.

Options **none**—Display all Packet Forwarding Engine forwarding table information.

clnp—(Optional) Show International Standards Organization (ISO) connectionless-mode network protocol (CLNP) route table information.

dhcp—(Optional) Display Packet Forwarding Engine DHCP-Snooping route table information.

fpc ***slot***—(TX Matrix and TX Matrix Plus routers only) (Optional) Show the next hops for a Flexible PIC Concentrator (FPC) slot.

- On a TX Matrix router, if you specify the number of a T640 router by using the **lcc** *number* option (the recommended method), replace ***slot*** with a value from **0** through **7**. Otherwise, replace ***slot*** with a value from **0** through **31**.
- On a TX Matrix Plus router, if you specify the number of a T1600 router by using the **lcc** *number* option (the recommended method), replace ***slot*** with a value from **0** through **7**. Otherwise, replace ***slot*** with a value from **0** through **31**
- On a TX Matrix Plus router in the TXP-T1600-3D, TXP-T4000-3D, or TXP-Mixed-LCC-3D configuration, if you specify the number of a T1600 or T4000 router by using the **lcc** *number* option (the recommended method), replace ***slot*** with a value from **0** through **7**. Otherwise, replace ***slot*** with a value from **0** through **63**.

For example, the following commands have the same result:

```
user@host> show pfe route fpc 1 lcc 1
user@host> show pfe route fpc 9
```

host—(QFX standalone switches, pure mode QFX5100-only VCF and VC, and pure mode QFX3500-only VC) (Optional) Display host routes installed in the on-chip hardware table.

hw—(QFX standalone switches, pure mode QFX5100-only VCF and VC, and pure mode QFX3500-only VC) (Optional) Display routes installed in the on-chip hardware table (as opposed to displaying routes from the routing table and the PFE forwarding table before they are installed in the hardware).

index ***index***—(Optional) Display table index.

inet6—(Optional) Display Packet Forwarding Engine IPv6 routes.

ip—(Optional) Display Packet Forwarding Engine IPv4 routes.

iso —(Optional) Display ISO version routing tables.

lcc ***number***—(TX Matrix and TX Matrix Plus routers only) (Optional) On a TX Matrix router, the slot number of the T640 router (or line-card chassis) that houses the FPC. On a TX Matrix Plus router, the slot number of the router (line-card chassis) that houses the FPC.

Replace *number* with the following values depending on the LCC configuration:

- 0 through 3, when T640 routers are connected to a TX Matrix router in a routing matrix.
- 0 through 3, when T1600 routers are connected to a TX Matrix Plus router in a routing matrix.
- 0 through 7, when T1600 routers are connected to a TX Matrix Plus router with 3D SIBs in a routing matrix.
- 0, 2, 4, or 6, when T4000 routers are connected to a TX Matrix Plus router with 3D SIBs in a routing matrix.

lpm—(QFX standalone switches, pure mode QFX5100-only VCF and VC, and pure mode QFX3500-only VC) (Optional) Display longest prefix match (LPM) routes installed in the on-chip hardware table.

mpls—(Optional) Display Packet Forwarding Engine MPLS information.

multicast—(QFX standalone switches, pure mode QFX5100-only VCF and VC, and pure mode QFX3500-only VC) (Optional) Display multicast routes installed in the on-chip hardware table.

prefix ***prefix***—(Optional) IPv4 or IPv6 prefix for which to show table entries.

summary—(Optional) Display summary of Packet Forwarding Engine information.

table <*table-name*>—(Optional) Display table information.

Required Privilege Level

admin

Related Documentation

- *Routing Matrix with TXP-T1600 Configuration*
- *Routing Matrix with TXP-T1600-3D Configuration*
- *Routing Matrix with TXP-T4000-3D Configuration*
- *Routing Matrix with a TXP-Mixed-LCC-3D Configuration*

Copyright © 2018, Juniper Networks, Inc.

List of Sample Output

show pfe route ip on page 810
show pfe route iso on page 810
show pfe route lcc summary (TX Matrix Router) on page 811
show pfe route lcc summary (TX Matrix Plus Router) on page 812
show pfe route summary (MX Series Router) on page 813
show pfe route summary hw (QFX Series, EX4600 Switches, OCX Series) on page 814
show pfe route ip hw host (QFX Series) on page 814

Output Fields

Table 150 on page 809 lists the output fields for the **show pfe route** command. Output fields are listed in the approximate order in which they appear.

Table 150: show pfe route Output Fields

Field Name	Field Description
Destination	Destination address for the entry.
NH IP Addr	Next-hop IP address for the entry.
Type	Next-hop type for the entry
NH ID	Next-hop ID for the entry
Encap	Encapsulation type for the next-hop entry.
Interface	Interface to which the next-hop entry is assigned.

Table 151 on page 809 lists the output fields for the QFX Series **show pfe route** hardware table (**hw**) commands. Output fields are listed in the approximate order in which they appear.

Table 151: QFX Series, EX4600 switches, and OCX Series show pfe route Hardware Table Output Fields

Field Name	Field Description
Max	Maximum routing entries per route type.
Used	Number of routing entries consumed per route type.
Free	Number of unused routing entries per route type.
% Free	Percentage of unused routing entries per route type.
Rtt	Internal routing engine index number of the route table.
VRF	Internal hardware index number for the corresponding route table.
Destination	Destination address for the entry.

Copyright © 2018, Juniper Networks, Inc.

Table 151: QFX Series, EX4600 switches, and OCX Series show pfe route Hardware Table Output Fields (continued)

Field Name	Field Description
Type	(**show pfe route summary hw**)—Route type for the entry: IPv4 or IPv6 route, and host, LPM, or multicast route. (**show pfe route (ip | inet6) hw**)—Next-hop type for the entry.
NH ID	Next-hop ID for the entry
Interface	Interface to which the next-hop entry is assigned.
HW NH-ID	Internal hardware index number of the next-hop.
Src-MAC-Address	Source MAC address.
Port	Port number.
Dst-MAC-Address	Destination MAC address.
VLAN	ID of the multicast group VLAN.
GROUP	Internal hardware index number of the multicast group next-hop.
CLASS	Internal class number of the multicast group.

Sample Output

show pfe route ip

```
user@host> show pfe route ip

IPv4 Route Table 0, default.0, 0x0:
Destination                       NH IP Addr      Type     NH ID Interface
--------------------------------- --------------- -------- ----- ---------
default                                            Discard      8
127.0.0.1                         127.0.0.1          Local    256
172.16/12                         192.168.71.254   Unicast     68 fxp0.0
192.168.0/18                      192.168.71.254   Unicast     68 fxp0.0
192.168.40/22                     192.168.71.254   Unicast     68 fxp0.0
192.168.64/18                     192.168.71.254   Unicast     68 fxp0.0
192.168.64/21                                      Resolve     67 fxp0.0
192.168.71.249                    192.168.71.249     Local     66
192.168.220.0/30                                   Resolve    303 fe-0/0/0.0
192.168.220.0                     192.168.220.0    Receive    301 fe-0/0/0.0
224.0.0.1                                            Mcast      5
255.255.255.255                                      Bcast      6

...
```

show pfe route iso

```
user@host# show pfe route iso
```


Copyright © 2018, Juniper Networks, Inc.

```
CLNS Route Table 0, CLNP.0, 0x0:
Destination                                Type     NH ID Interface
---------------------------------------- -------- ----- ---------
default                                    Reject    60
47.0005.80ff.f800.0000.0108.0001.0102.5508.2159/152     Local   514
49.0001.00a0.c96b.c491/72                   Local   536
```

show pfe route lcc summary (TX Matrix Router)

user@host> **show pfe route lcc 2 summary**

```
Slot 0

IPv4 Route Tables:
Index         Routes     Size(b)
--------  ----------  ----------
Default           43        3081
1                  4         281

MPLS Route Tables:
Index         Routes     Size(b)
--------  ----------  ----------
Default            1          68

IPV6 Route Tables:
Index         Routes     Size(b)
--------  ----------  ----------
Default            9         717
1                  5         389

Slot 1


IPv4 Route Tables:
Index         Routes     Size(b)
--------  ----------  ----------
Default           43        3081
1                  4         281

MPLS Route Tables:

Index         Routes     Size(b)
--------  ----------  ----------
Default            1          68

IPV6 Route Tables:
Index         Routes     Size(b)
--------  ----------  ----------
Default            9         717
1                  5         389

Slot 16

IPv4 Route Tables:
Index         Routes     Size(b)
--------  ----------  ----------
Default           41        2938
1                  4         281
```

```
MPLS Route Tables:
Index         Routes     Size(b)
--------  ----------  ----------
Default            1          68

IPV6 Route Tables:
Index         Routes     Size(b)
--------  ----------  ----------
Default            9         717
1                  5         389

Slot 17

IPv4 Route Tables:
Index         Routes     Size(b)
--------  ----------  ----------
Default           41        2938
1                  4         281


MPLS Route Tables:
Index         Routes     Size(b)
--------  ----------  ----------
Default            1          68

IPV6 Route Tables:
Index         Routes     Size(b)
--------  ----------  ----------
Default            9         717
1                  5         389
```

show pfe route lcc summary (TX Matrix Plus Router)

user@host> **show pfe route lcc 2 summary**

```
Slot 0


IPv4 Route Tables:
Index         Routes     Size(b)
--------  ----------  ----------
Default           25        2266
1                  9         815
2                  6         545
3                  5         453
4                 15        1371
5                  5         453
6                 13        1187

MPLS Route Tables:
Index         Routes     Size(b)
--------  ----------  ----------
Default            1          88
4                  5         452

IPv6 Route Tables:
Index         Routes     Size(b)
--------  ----------  ----------
```


Copyright © 2018, Juniper Networks, Inc.

```
Default            7         697
1                 13        1305
3                  4         385
4                  4         385
5                  4         385
6                 18        1833

Slot 6


IPv4 Route Tables:
Index         Routes     Size(b)
--------  ----------  ----------
Default           25        2266
1                  9         815
2                  6         545
3                  5         453
4                 15        1371
5                  5         453
6                 13        1187

MPLS Route Tables:
Index         Routes     Size(b)
--------  ----------  ----------
Default            1          88
4                  5         452

IPv6 Route Tables:
Index         Routes     Size(b)
--------  ----------  ----------
Default            7         697
1                 13        1305
3                  4         385
4                  4         385
5                  4         385
6                 18        1833
...
```

show pfe route summary (MX Series Router)

user@host> **show pfe route summary**

```
Slot 0


DHCP-Snooping Route Tables:
Index         Routes     Size(b)
--------  ----------  ----------
Default            1         144

IPv4 Route Tables:
Index         Routes     Size(b)
--------  ----------  ----------
Default           25        2266
1                  9         815
2                  6         545
3                  5         453
4                 15        1371
5                  5         453
```

```
6                 13        1187

MPLS Route Tables:
Index         Routes     Size(b)
--------  ----------  ----------
Default            1          88
4                  5         452

IPv6 Route Tables:
Index         Routes     Size(b)
--------  ----------  ----------
Default            7         697
1                 13        1305
3                  4         385
4                  4         385
5                  4         385
6                 18        1833

...
```

show pfe route summary hw (QFX Series, EX4600 Switches, OCX Series)

user@switch> **show pfe route summary hw**

```
Slot 0
Unit: 0
Profile active: l2-profile-three
Type            Max       Used      Free      % free
----------------------------------------------------
IPv4 Host       8192      103       8073      98.55
IPv4 LPM        16384     9         16369     99.91
IPv4 Mcast      4096      2         4037      98.56

IPv6 Host       4096      6         4037      98.56
IPv6 LPM(< 64)  8192      3         8185      99.91
IPv6 LPM(> 64)  256       1    255       99.61
IPv6 Mcast      2048      0         2019      98.58
```

show pfe route ip hw host (QFX Series)

user@switch> **show pfe route ip hw host**

```
Slot 0
Unit: 0
IPv4 Host entries present: 103
Rtt  VRF  Destination                        Type     NH-ID     Interface
         HW NH-ID  Src-MAC-Address   Port Dst-MAC-Address
-------------------------------------------------------------------------------
4    3    255.255.255.255                    Bcast    1695      .local.    .4
ifl 550   100003    00:00:00:01:02:03 127  00:00:00:01:02:03
0    1    200.1.1.42                         Unicast  1743      et-0/1/1   .0
ifl 559   100268    84:18:88:de:96:fd 53   00:00:00:21:12:23
0    1    200.1.1.56                         Unicast  1743      et-0/1/1   .0
ifl 559   100268    84:18:88:de:96:fd 53   00:00:00:21:12:23
0    1    200.1.1.61                         Unicast  1743      et-0/1/1   .0
ifl 559   100268    84:18:88:de:96:fd 53   00:00:00:21:12:23
0    1    11.1.1.2                           Unicast  1743      et-0/1/1   .0
ifl 559   100268    84:18:88:de:96:fd 53   00:00:00:21:12:23
```


Copyright © 2018, Juniper Networks, Inc.

```
0    1    200.1.1.73                        Unicast  1743      et-0/1/1   .0
ifl 559   100268    84:18:88:de:96:fd 53   00:00:00:21:12:23
0    1    200.1.1.76                        Unicast  1743      et-0/1/1   .0
ifl 559   100268    84:18:88:de:96:fd 53   00:00:00:21:12:23
0    1    200.1.1.18                        Unicast  1743      et-0/1/1   .0
ifl 559   100268    84:18:88:de:96:fd 53   00:00:00:21:12:23
0    1    200.1.1.5                         Unicast  1743      et-0/1/1   .0
ifl 559   100268    84:18:88:de:96:fd 53   00:00:00:21:12:23
0    1    200.1.1.23                        Unicast  1743      et-0/1/1   .0
ifl 559   100268    84:18:88:de:96:fd 53   00:00:00:21:12:23
0    1    101.1.1.255                       Bcast    1664      ae0        .0
ifl 544   100003    00:00:00:01:02:03 127  00:00:00:01:02:03
0    1    200.1.1.40                        Unicast  1743      et-0/1/1   .0
ifl 559   100268    84:18:88:de:96:fd 53   00:00:00:21:12:23
0    1    200.1.1.58                        Unicast  1743      et-0/1/1   .0
ifl 559   100268    84:18:88:de:96:fd 53   00:00:00:21:12:23. . .
. . .
```

show pfe terse

List of Syntax

Syntax on page 816
Syntax (TX Matrix and TX Matrix Plus Router) on page 816
Syntax (MX Series Router) on page 816

Syntax

```
show pfe terse
```

Syntax (TX Matrix and TX Matrix Plus Router)

```
show pfe terse
<lcc number | scc>
<sfc number>
```

Syntax (MX Series Router)

```
show pfe terse
<all-members>
<local>
<member member-id>
```

Release Information

Command introduced before Junos OS Release 7.4.
Command introduced in Junos OS Release 9.0 for EX Series switches.
Command introduced in Junos OS Release 11.1 for the QFX Series.
Command introduced in Junos OS Release 14.1X53-D20 for the OCX Series.

Description

Display Packet Forwarding Engine status information.

Options

none—Display brief information about the Packet Forwarding Engine.

all-members—(MX Series routers only) (Optional) Display Packet Forwarding Engine status information for all members in the Virtual Chassis configuration.

lcc *number*—(TX Matrix and TX Matrix Plus routers only) (Optional) On a TX Matrix router, display Packet Forwarding Engine information for a T640 router (or line-card chassis) that is connected to a TX Matrix router. On a TX Matrix Plus router, display Packet Forwarding Engine information for the router (or line-card chassis) that is connected to a TX Matrix Plus router.

Replace *number* with the following values depending on the LCC configuration:

- 0 through 3, when T640 routers are connected to a TX Matrix router in a routing matrix.
- 0 through 3, when T1600 routers are connected to a TX Matrix Plus router in a routing matrix.
- 0 through 7, when T1600 routers are connected to a TX Matrix Plus router with 3D SIBs in a routing matrix.
- 0, 2, 4, or 6, when T4000 routers are connected to a TX Matrix Plus router with 3D SIBs in a routing matrix.

Copyright © 2018, Juniper Networks, Inc.

local—(MX Series routers only) (Optional) Display Packet Forwarding Engine status information for the local Virtual Chassis member.

member *member-id*—(MX Series routers only) (Optional) Display Packet Forwarding Engine status information for the specified member of the Virtual Chassis configuration. Replace ***member-id*** with a value of 0 or 1.

scc—(TX Matrix routers only) (Optional) Display Packet Forwarding Engine information for the TX Matrix router (or switch-card chassis).

sfc—(TX Matrix Plus routers only) (Optional) Display Packet Forwarding Engine information for the TX Matrix Plus router (or switch-fabric chassis).

Required Privilege Level admin

List of Sample Output

show pfe terse (TX Matrix Router) on page 817
show pfe terse (TX Matrix Plus Router) on page 817
show pfe terse sfc (TX Matrix Plus Router) on page 817

Sample Output

show pfe terse (TX Matrix Router)

```
user@host> show pfe terse
Slot Type Slot    State   Flags Uptime
  0  SFM  Present Online  0x0bf 01:25:42
  2  SFM  Present Online  0x0bf 01:25:40
  0  FPC  Present Online  0x102 01:25:57
  1  FPC  Present Online  0x102 01:25:55
  2  FPC  Present Online  0x102 01:25:53
```

show pfe terse (TX Matrix Plus Router)

```
user@host> show pfe terse
sfc0-re0:
--------------------------------------------------------------------------
Slot Type Slot      State     Uptime
 0   LCC  Present   Online    2d 05:26

lcc0-re0:
--------------------------------------------------------------------------
Slot Type Slot      State     Uptime
 0   GFPC Present   Online    2d 05:25
 1   GFPC Present   Online    2d 05:25
```

show pfe terse sfc (TX Matrix Plus Router)

```
user@host> show pfe terse sfc 0
sfc0-re0:
--------------------------------------------------------------------------
```

```
Slot Type Slot      State     Uptime
 0   LCC  Present   Online    2d 05:25
```


Copyright © 2018, Juniper Networks, Inc.

show pfe version

Syntax

```
show pfe version <brief | detail>
```

Release Information

Command introduced before Junos OS Release 7.4.
Command introduced in Junos OS Release 11.1 for the QFX Series.
Command introduced in Junos OS Release 14.1X53-D20 for the OCX Series.

Description

Display Packet Forwarding Engine version information.

Options

brief | detail—Display the specified level of output.

Required Privilege Level

admin

List of Sample Output

show pfe version brief on page 819
show pfe version detail on page 819

Sample Output

show pfe version brief

```
user@host> show pfe version brief
PFED release 11.1D0 built by builder on 2010-11-11 05:16:11 UTC
```

show pfe version detail

```
user@host> show pfe version detail
PFED release 11.1D0 built by builder on 2010-11-11 05:16:11 UTC

device01.example.com:/volume/build/junos/rpd_feb11/11.1/development/20101111.0/obj-i386/
junos/usr.sbin/pfed
```

Copyright © 2018, Juniper Networks, Inc.

CHAPTER 17

Operational Commands (Classifiers and Rewrite Rules)

- Monitoring CoS Classifiers on page 821
- Monitoring CoS Forwarding Classes on page 822
- Monitoring CoS Rewrite Rules on page 825
- Monitoring CoS Code-Point Value Aliases on page 826
- show class-of-service classifier
- show class-of-service code-point-aliases
- show class-of-service forwarding-class
- show class-of-service forwarding-class-set
- show class-of-service forwarding-table
- show class-of-service forwarding-table classifier
- show class-of-service forwarding-table classifier mapping
- show class-of-service forwarding-table rewrite-rule
- show class-of-service forwarding-table rewrite-rule mapping
- show class-of-service interface
- show class-of-service multi-destination
- show class-of-service rewrite-rule

Monitoring CoS Classifiers

Purpose Display the mapping of incoming CoS values to forwarding class and loss priority for each classifier.

Action To monitor CoS classifiers in the CLI, enter the CLI command:

user@switch> **show class-of-service classifier**

To monitor a particular classifier in the CLI, enter the CLI command:

user@switch> **show class-of-service classifier name *classifier-name***

To monitor a particular type of classifier in the CLI, enter the CLI command:

user@switch> **show class-of-service classifier type *classifier-type***

Meaning Table 152 on page 822 summarizes key output fields for CoS classifiers.

Table 152: Summary of Key CoS Classifier Output Fields

Field	Values
Classifier	Name of a classifier.
Code point type	Type of classifier: • **dscp**—All classifiers of the DSCP type. • **ieee-802.1**—All classifiers of the IEEE 802.1 type. • **ieee-mcast**—All classifiers of the IEEE 802.1 multicast type. NOTE: QFX10000 switches do not use different classifiers for unicast and multidestination (multicast, broadcast, destination lookup fail) traffic, so multicast-specific classifiers are not supported. • **exp**—All classifiers of the MPLS exp type. NOTE: OCX Series switches do not support MPLS.
Index	Internal index of the classifier.
Code point	DSCP or IEEE 802.1 code point value of the incoming packets, in bits. These values are used for classification.
Forwarding Class	Name of the forwarding class that the classifier assigns to an incoming packet. This class affects the forwarding and scheduling policies that are applied to the packet as it transits the switch.
Loss Priority	Loss priority value that the classifier assigns to the incoming packet based on its code point value.

Monitoring CoS Forwarding Classes

Purpose Use the monitoring functionality to view the current assignment of CoS forwarding classes to queue numbers on the system.

Action To monitor CoS forwarding classes in the CLI, enter the following CLI command:

user@switch> **show class-of-service forwarding-class**

Meaning Some switches use different forwarding classes, output queues, and classifiers for unicast and multidestination (multicast, broadcast, destination lookup fail) traffic. These switches support 12 forwarding classes and output queues, eight for unicast traffic and four for multidestination traffic.

 Copyright © 2018, Juniper Networks, Inc.

Some switches use the same forwarding classes, output queues, and classifiers for unicast and multidestination traffic. These switches support eight forwarding classes and eight output queues.

Table 153 on page 823 summarizes key output fields on switches that use different forwarding classes and output queues for unicast and multidestination traffic.

Table 153: Summary of Key CoS Forwarding Class Output Fields on Switches that Separate Unicast and Multidestination Traffic

Field	Values
Forwarding Class	Names of forwarding classes assigned to queue numbers. By default, the following unicast forwarding classes are assigned to queues 0, 3, 4, and 7, respectively: • **best-effort**—Provides no special CoS handling of packets. Loss priority is typically not carried in a CoS value. • **fcoe**—Provides guaranteed delivery for Fibre Channel over Ethernet (FCoE) traffic. • **no-loss**—Provides guaranteed delivery for TCP lossless traffic • **network-control**—Packets can be delayed but not dropped. By default, the following multidestination forwarding class is assigned to queue 8: • **mcast**—Provides no special CoS handling of packets.
Queue	Queue number corresponding to (mapped to) the forwarding class name. By default, four queues (0, 3, 4, and 7) are assigned to unicast forwarding classes and one queue (8) is assigned to a multidestination forwarding class: • Queue 0—**best-effort** • Queue 3—**fcoe** • Queue 4—**no-loss** • Queue 7—**network-control** • Queue 8—**mcast**

Copyright © 2018, Juniper Networks, Inc.

Table 153: Summary of Key CoS Forwarding Class Output Fields on Switches that Separate Unicast and Multidestination Traffic (continued)

Field	Values
No-Loss	Packet drop attribute associated with each forwarding class: • Disabled—The forwarding class is configured for lossy transport (packets might drop during periods of congestion) • Enabled—The forwarding class is configured for lossless transport NOTE: To achieve lossless transport, you must ensure that priority-based flow control (PFC) and DCBX are properly configured on the lossless priority (IEEE 802.1p code point), and that sufficient port bandwidth is reserved for the lossless traffic flows. OCX Series switches do not support lossless transport.

NOTE: OCX Series switches do not support the default lossless forwarding classes **fcoe** and **no-loss**, and do not support the no-loss packet drop attribute used to configure lossless forwarding classes. On OCX Series switches, do not map traffic to the default **fcoe** and **no-loss** forwarding classes (both of these default forwarding classes carry the no-loss packet drop attribute), and do not configure the no-loss packet drop attribute on forwarding classes.

Table 154 on page 824 summarizes key output fields on switches that use the same forwarding classes and output queues for unicast and multidestination traffic.

Table 154: Summary of Key CoS Forwarding Class Output Fields on Switches That Do Not Separate Unicast and Multidestination Traffic

Field	Values
Forwarding Class	Names of forwarding classes assigned to queue numbers. By default, the following forwarding classes are assigned to queues 0, 3, 4, and 7, respectively: • **best-effort**—Provides no special CoS handling of packets. Loss priority is typically not carried in a CoS value. • **fcoe**—Provides guaranteed delivery for Fibre Channel over Ethernet (FCoE) traffic. • **no-loss**—Provides guaranteed delivery for TCP lossless traffic • **network-control**—Packets can be delayed but not dropped.

Copyright © 2018, Juniper Networks, Inc.

Table 154: Summary of Key CoS Forwarding Class Output Fields on Switches That Do Not Separate Unicast and Multidestination Traffic (continued)

Field	Values
Queue	Queue number corresponding to (mapped to) the forwarding class name. By default, four queues (0, 3, 4, and 7) are assigned to forwarding classes: • Queue 0—**best-effort** • Queue 3—**fcoe** • Queue 4—**no-loss** • Queue 7—**network-control**
No-Loss	Packet drop attribute associated with each forwarding class: • Disabled—The forwarding class is configured for lossy transport (packets might drop during periods of congestion). • Enabled—The forwarding class is configured for lossless transport. NOTE: To achieve lossless transport, you must ensure that priority-based flow control (PFC) and DCBX are properly configured on the lossless priority (IEEE 802.1p code point), and that sufficient port bandwidth is reserved for the lossless traffic flows. OCX Series switches do not support lossless transport.

Monitoring CoS Rewrite Rules

Purpose Use the monitoring functionality to display information about CoS value rewrite rules, which are based on the forwarding class and loss priority.

Action To monitor CoS rewrite rules in the CLI, enter the CLI command:

user@switch> **show class-of-service rewrite-rule**

To monitor a particular rewrite rule in the CLI, enter the CLI command:

user@switch> **show class-of-service rewrite-rule name *rewrite-rule-name***

To monitor a particular type of rewrite rule (for example, DSCP, DSCP IPv6, IEEE-802.1, or MPLS EXP) in the CLI, enter the CLI command:

user@switch> **show class-of-service rewrite-rule type *rewrite-rule-type***

Meaning Table 155 on page 826 summarizes key output fields for CoS rewrite rules.

Table 155: Summary of Key CoS Rewrite Rule Output Fields

Field	Values
Rewrite rule	Name of the rewrite rule.
Code point type	Rewrite rule type: • **dscp**—For IPv4 DiffServ traffic. • **dscp-ipv6**—For IPv6 Diffserv traffic. • **ieee-802.1**—For Layer 2 traffic. • **exp**—For MPLS traffic. NOTE: OCX Series switches do not support MPLS.
Index	Internal index for the rewrite rule.
Forwarding class	Name of the forwarding class that is used to determine CoS values for rewriting in combination with loss priority. Rewrite rules are applied to CoS values in outgoing packets based on forwarding class and loss priority setting.
Loss priority	Level of loss priority that is used to determine CoS values for rewriting in combination with forwarding class.
Code point	Rewrite code point value.

Related Documentation
- Defining CoS Rewrite Rules on page 130

Monitoring CoS Code-Point Value Aliases

Purpose Use the monitoring functionality to display information about the CoS code-point value aliases that the system is currently using to represent DSCP and IEEE 802.1p code point bits.

Action To monitor CoS value aliases in the CLI, enter the CLI command:

user@switch> **show class-of-service code-point-aliases**

To monitor a specific type of code-point alias (DSCP, DSCP IPv6, IEEE 802.1, or MPLS EXP) in the CLI, enter the CLI command:

user@switch> **show class-of-service code-point-aliases ieee-802.1**

Meaning Table 156 on page 827 summarizes key output fields for CoS value aliases.

 Copyright © 2018, Juniper Networks, Inc.

Table 156: Summary of Key CoS Value Alias Output Fields

Field	Values
Code point type	Type of the CoS value: • **dscp**—Examines Layer 3 packet headers for IP packet classification. • **dscp-ipv6**—Examines Layer 3 packet headers for IPv6 packet classification. • **ieee-802.1**—Examines Layer 2 packet headers for packet classification. • **exp**—Examines MPLS packet headers for packet classification. NOTE: OCX Series switches do not support MPLS.
Alias	Name given to a set of bits—for example, **af11** is a name for bits **001010**.
Bit pattern	Set of bits associated with the alias.

Related Documentation

- Defining CoS Code-Point Aliases on page 103

show class-of-service classifier

Syntax

```
show class-of-service classifier
<name name>
<type dscp | type dscp-ipv6 | type exp | type ieee-802.1 | type inet-precedence>
```

Release Information

Command introduced before Junos OS Release 7.4.
Command introduced in Junos OS Release 9.0 for EX Series switches.
Command introduced in Junos OS Release 11.1 for the QFX Series.
Command introduced in Junos OS Release 14.1X53-D20 for the OCX Series.

Description

For each class-of-service (CoS) classifier, display the mapping of code point value to forwarding class and loss priority.

Options

none—Display all classifiers.

name *name*—(Optional) Display named classifier.

type dscp—(Optional) Display all classifiers of the Differentiated Services code point (DSCP) type.

type dscp-ipv6—(Optional) Display all classifiers of the DSCP for IPv6 type.

type exp—(Optional) Display all classifiers of the MPLS experimental (EXP) type.

type ieee-802.1—(Optional) Display all classifiers of the ieee-802.1 type.

type inet-precedence—(Optional) Display all classifiers of the inet-precedence type.

Required Privilege Level

view

List of Sample Output

show class-of-service classifier type ieee-802.1 on page 829
show class-of-service classifier type ieee-802.1 (QFX Series) on page 829

Output Fields

Table 157 on page 828 describes the output fields for the **show class-of-service classifier** command. Output fields are listed in the approximate order in which they appear.

Table 157: show class-of-service classifier Output Fields

Field Name	Field Description
Classifier	Name of the classifier.
Code point type	Type of the classifier: **exp** (not on EX Series switch), **dscp**, **dscp-ipv6** (not on EX Series switch), **ieee-802.1**, or **inet-precedence**.
Index	Internal index of the classifier.

Copyright © 2018, Juniper Networks, Inc.

Table 157: show class-of-service classifier Output Fields (continued)

Field Name	Field Description
Code point	Code point value used for classification
Forwarding class	Classification of a packet affecting the forwarding, scheduling, and marking policies applied as the packet transits the router.
Loss priority	Loss priority value used for classification. For most platforms, the value is **high** or **low**. For some platforms, the value is **high**, **medium-high**, **medium-low**, or **low**.

Sample Output

show class-of-service classifier type ieee-802.1

user@host> show class-of-service classifier type ieee-802.1

```
Classifier: ieee802.1-default, Code point type: ieee-802.1, Index: 3
Code Point         Forwarding Class                  Loss priority
  000              best-effort                         low
  001              best-effort                         high
  010              expedited-forwarding                low
  011              expedited-forwarding                high
  100              assured-forwarding                  low
  101              assured-forwarding                  medium-high
  110              network-control                     low
  111              network-control                     high

Classifier: users-ieee802.1, Code point type: ieee-802.1
  Code point         Forwarding class                    Loss priority
  100                expedited-forwarding                low
```

show class-of-service classifier type ieee-802.1 (QFX Series)

user@switch> show class-of-service classifier type ieee-802.1

```
Classifier: ieee8021p-default, Code point type: ieee-802.1, Index: 11
  Code point         Forwarding class                    Loss priority
  000                best-effort                         low
  001                best-effort                         low
  010                best-effort                         low
  011                fcoe                                low
  100                no-loss                             low
  101                best-effort                         low
  110                network-control                     low
  111                network-control                     low

Classifier: ieee8021p-untrust, Code point type: ieee-802.1, Index: 16
  Code point         Forwarding class                    Loss priority
  000                best-effort                         low
  001                best-effort                         low
  010                best-effort                         low
  011                best-effort                         low
  100                best-effort                         low
  101                best-effort                         low
  110                best-effort                         low
```

```
  111                best-effort                        low

Classifier: ieee-mcast, Code point type: ieee-802.1, Index: 46
  Code point         Forwarding class                   Loss priority
  000                mcast                              low
  001                mcast                              low
  010                mcast                              low
  011                mcast                              low
  100                mcast                              low
  101                mcast                              low
  110                mcast                              low
  111                mcast                              low
```


Copyright © 2018, Juniper Networks, Inc.

show class-of-service code-point-aliases

Syntax

```
show class-of-service code-point-aliases
<dscp | dscp-ipv6 | exp | ieee-802.1 | inet-precedence>
```

Release Information

Command introduced before Junos OS Release 7.4.
Command introduced in Junos OS Release 9.0 for EX Series switches.
Command introduced in Junos OS Release 11.1 for the QFX Series.
Command introduced in Junos OS Release 14.1X53-D20 for the OCX Series.

Description

Display the mapping of class-of-service (CoS) code point aliases to corresponding bit patterns.

Options

none—Display code point aliases of all code point types.

dscp—(Optional) Display Differentiated Services code point (DSCP) aliases.

dscp-ipv6—(Optional) Display IPv6 DSCP aliases.

exp—(Optional) Display MPLS EXP code point aliases.

ieee-802.1—(Optional) Display IEEE-802.1 code point aliases.

inet-precedence—(Optional) Display IPv4 precedence code point aliases.

Required Privilege Level

view

List of Sample Output

show class-of-service code-point-aliases exp on page 832

Output Fields

Table 158 on page 831 describes the output fields for the **show class-of-service code-point-aliases** command. Output fields are listed in the approximate order in which they appear.

Table 158: show class-of-service code-point-aliases Output Fields

Field Name	Field Description
Code point type	Type of the code points displayed: **dscp**, **dscp-ipv6** (not on EX Series switch), **exp** (not on EX Series switch or the QFX Series), **ieee-802.1**, or **inet-precedence** (not on the QFX Series).
Alias	Alias for a bit pattern.
Bit pattern	Bit pattern for which the alias is displayed.

Sample Output

show class-of-service code-point-aliases exp

```
user@host> show class-of-service code-point-aliases exp

Code point type: exp
  Alias               Bit pattern
  af11                100
  af12                101
  be                  000
  be1                 001
  cs6                 110
  cs7                 111
  ef                  010
  ef1                 011
  nc1                 110
  nc2                 111
```


Copyright © 2018, Juniper Networks, Inc.

show class-of-service forwarding-class

Syntax

show class-of-service forwarding-class

Release Information

Command introduced in Junos OS Release 9.0 for EX Series switches.
Command introduced in Junos OS Release 11.1 for the QFX Series.
Command introduced in Junos OS Release 14.1X53-D20 for the OCX Series.
PFC priority output field introduced for DSCP-based PFC in Junos OS Release 17.4R1 for the QFX Series.

Description

Display information about forwarding classes, including the mapping of forwarding classes to queue numbers.

Required Privilege Level

view

Related Documentation

- *Monitoring CoS Forwarding Classes*
- Monitoring CoS Forwarding Classes on page 822
- *Understanding PFC Using DSCP at Layer 3 for Untagged Traffic*

List of Sample Output

show class-of-service forwarding-class on page 834
show class-of-service forwarding-class (EX8200 Switch) on page 834
show class-of-service forwarding-class (QFX Series) on page 835
show class-of-service forwarding-class (QFX Series with DSCP-based PFC) on page 835

Output Fields

Table 159 on page 833 describes the output fields for the **show class-of-service forwarding-class** command. Output fields are listed in the approximate order in which they appear.

Table 159: show class-of-service forwarding-class Output Fields

Field Name	Field Description
Forwarding class	Name of the forwarding class.
ID	Forwarding class identifier. (QFX5110, QFX5200, and QFX5210 switches only) For DSCP-based PFC, the forwarding class ID is assigned from (and should be the same as) the configured PFC priority for the forwarding class. See *Configuring DSCP-based PFC for Layer 3 Untagged Traffic* for details.
Queue	CoS output queue mapped to the forwarding class.
Policing priority	Not supported on EX Series switches or the QFX Series and can be ignored.

Table 159: show class-of-service forwarding-class Output Fields (continued)

Field Name	Field Description
Fabric priority	(EX8200 switches only) Fabric priority for the forwarding class, either **high** or **low**. Determines the priority of packets entering the switch fabric.
No-Loss	(QFX Series only) Packet loss attribute to differentiate lossless forwarding classes from lossy forwarding classes: • Disabled—Lossless transport is not configured on the forwarding class (packet drop attribute is **drop**). • Enabled—Lossless transport is configured on the forwarding class (packet drop attribute is **no-loss**).
PFC Priority	(QFX5110, QFX5200, and QFX5210 switches only) For DSCP-based PFC, the explicitly configured PFC priority configured for the forwarding class. The DSCP value on which PFC is enabled maps to this priority, and this priority is used in PFC pause frames sent to the peer to request to pause traffic on the mapped DSCP value when the link becomes congested. The forwarding class ID is assigned from and should match this value in the output of this command. See *Configuring DSCP-based PFC for Layer 3 Untagged Traffic* for details.

Sample Output

show class-of-service forwarding-class

```
user@switch> show class-of-service forwarding-class
Forwarding class              ID                      Queue  Policing priority
  best-effort                      0                       0           normal
  expedited-forwarding             1                       5           normal
  assured-forwarding               2                       1           normal
  network-control                  3                       7           normal
```

Sample Output

show class-of-service forwarding-class (EX8200 Switch)

```
user@switch> show class-of-service forwarding-class
Forwarding class                      ID      Queue  Fabric priority
  best-effort                          0       0      low
  expedited-forwarding                 1       5      low
  assured-forwarding                   2       1      low
  network-control                      3       7      low
  mcast-be                             4       2      low
  mcast-ef                             5       4      low
  mcast-af                             6       6      low
```


Copyright © 2018, Juniper Networks, Inc.

Sample Output

show class-of-service forwarding-class (QFX Series)

```
user@switch> show class-of-service forwarding-class
Forwarding class                      ID      Queue  Policing priority  No-Loss

  best-effort                         0         0         normal        Disabled

  fcoe                                1         3         normal        Enabled

  no-loss                             2         4         normal        Enabled

  network-control                     3         7         normal        Disabled

  mcast                               8         8         normal        Disabled
```

show class-of-service forwarding-class (QFX Series with DSCP-based PFC)

```
user@switch> show class-of-service forwarding-class
Forwarding class        ID      Queue  Policing priority  No-Loss     PFC priority

  best-effort            0         0        normal         Disabled
  fcoe                   1         3        normal         Enabled
  no-loss                2         4        normal         Enabled
  fc2                    3         2        normal         Enabled          3
  network-control        5         7        normal         Disabled
  fc1                    7         1        normal         Enabled          7
  mcast                  8         8        normal         Disabled
```

On switches that do not use different forwarding classes and output queues for unicast and multidestination (multicast, broadcast, destination lookup fail) traffic, there is no **mcast** forwarding class and there is no queue 8. (Switches that use different forwarding classes and output queues for unicast and multidestination traffic support 12 forwarding classes and output queues, of which four of each are dedicated to multidestination traffic. Switches that use the same forwarding classes and output queues for unicast and multidestination traffic support eight forwarding classes and eight output queues.)

show class-of-service forwarding-class-set

Syntax

```
show class-of-service forwarding-class-set
<forwarding-class-set-name>
```

Release Information

Command introduced in Junos OS Release 11.1 for the QFX Series.
Command introduced in Junos OS Release 14.1X53-D20 for the OCX Series.

Description

Display the forwarding classes associated with each forwarding class set.

Options

none—Display all forwarding class sets.

forwarding-class-set-name—(Optional) Display the forwarding classes associated with the specified forwarding class set.

Required Privilege Level

view

Related Documentation

- Understanding CoS Forwarding Class Sets (Priority Groups) on page 118
- Defining CoS Forwarding Class Sets on page 120
- Example: Configuring Forwarding Class Sets on page 120

Output Fields

Table 160 on page 836 describes the output fields for the **show class-of-service forwarding-class-set** command. Output fields are listed in the approximate order in which they appear.

Table 160: show class-of-service forwarding-class-set Output Fields

Field Name	Field Description
Forwarding class set	Name of the forwarding class set.
Type	Internal Junos OS type.
Forwarding class set index	Index of this forwarding class set.
Forwarding class	Name of a forwarding class.
Index	Index of this forwarding class.

Sample Output

show class-of-service forwarding-class-set

```
user@switch> show class-of-service forwarding-class-set
```


Copyright © 2018, Juniper Networks, Inc.

```
Forwarding class set: san_fcset, Type: normal-type, Forwarding class set index:
37839
  Forwarding class                       Index
  fcoe                                     1

Forwarding class set: lan_fcset, Type: normal-type, Forwarding class set index:
37840
  Forwarding class                       Index
  best-effort                              0

Forwarding class set: multicast_fcset, Type: normal-type, Forwarding class set
index: 37841
  Forwarding class                       Index
  mcast                                    8
```

show class-of-service forwarding-table

List of Syntax

Syntax on page 838
Syntax (TX Matrix and TX Matrix Plus Router) on page 838

Syntax

```
show class-of-service forwarding-table
```

Syntax (TX Matrix and TX Matrix Plus Router)

```
show class-of-service forwarding-table
<lcc number> | <sfc number>
```

Release Information

Command introduced before Junos OS Release 7.4.
Command introduced in Junos OS Release 11.1 for the QFX Series.
Command introduced in Junos OS Release 14.1X53-D20 for the OCX Series.

Description

Display the entire class-of-service (CoS) configuration as it exists in the forwarding table. Executing this command is equivalent to executing all **show class-of-service forwarding-table** commands in succession.

Options

lcc *number*—(TX Matrix and TX Matrix Plus router only) (Optional) On a TX Matrix router, display the forwarding table configuration for a specific T640 router (or line-card chassis) configured in a routing matrix. On a TX Matrix Plus router, display the forwarding table configuration for a specific router (or line-card chassis) configured in the routing matrix.

Replace *number* with the following values depending on the LCC configuration:

- 0 through 3, when T640 routers are connected to a TX Matrix router in a routing matrix.
- 0 through 3, when T1600 routers are connected to a TX Matrix Plus router in a routing matrix.
- 0 through 7, when T1600 routers are connected to a TX Matrix Plus router with 3D SIBs in a routing matrix.
- 0, 2, 4, or 6, when T4000 routers are connected to a TX Matrix Plus router with 3D SIBs in a routing matrix.

sfc *number*—(TX Matrix Plus routers only) (Optional) Display the forwarding table configuration for the TX Matrix Plus router. Replace ***number*** with **0**.

Required Privilege Level

view

List of Sample Output

show class-of-service forwarding-table on page 839
show class-of-service forwarding-table lcc (TX Matrix Plus Router) on page 840

Copyright © 2018, Juniper Networks, Inc.

Output Fields See the output field descriptions for **show class-of-service forwarding-table** commands:

- show class-of-service forwarding-table classifier
- show class-of-service forwarding-table classifier mapping
- show class-of-service forwarding-table drop-profile
- *show class-of-service forwarding-table fabric scheduler-map*
- show class-of-service forwarding-table rewrite-rule
- show class-of-service forwarding-table rewrite-rule mapping
- show class-of-service forwarding-table scheduler-map

Sample Output

show class-of-service forwarding-table

user@host> **show class-of-service forwarding-table**

```
Classifier table index: 9, # entries: 8, Table type: EXP
Entry #   Code point   Forwarding-class #   PLP
   0          000        0                 0
   1          001        0                 1
   2          010        1                 0
   3          011        1                 1
   4          100        2                 0
   5          101        2                 1
   6          110        3                 0
   7          111        3                 1

                       Table Index/
Interface      Index      Q num      Table type
sp-0/0/0.1001     66         11      IPv4 precedence
sp-0/0/0.2001     67         11      IPv4 precedence
sp-0/0/0.16383    68         11      IPv4 precedence
fe-0/0/0.0        69         11      IPv4 precedence

Interface: sp-0/0/0 (Index: 129, Map index: 2, Map type: FINAL,
 Num of queues: 2):
  Entry 0 (Scheduler index: 16, Forwarding-class #: 0):
    Tx rate: 0 Kb (95%), Buffer size: 95 percent
Priority low
    PLP high: 1, PLP low: 1, PLP medium-high: 1, PLP medium-low: 1
  Entry 1 (Scheduler index: 18, Forwarding-class #: 3):
    Tx rate: 0 Kb (5%), Buffer size: 5 percent
Priority low
    PLP high: 1, PLP low: 1, PLP medium-high: 1, PLP medium-low: 1

Interface: fe-0/0/0 (Index: 137, Map index: 2, Map type: FINAL,
 Num of queues: 2):
  Entry 0 (Scheduler index: 16, Forwarding-class #: 0):
    Tx rate: 0 Kb (95%), Buffer size: 95 percent
Priority low
    PLP high: 1, PLP low: 1, PLP medium-high: 1, PLP medium-low: 1
  Entry 1 (Scheduler index: 18, Forwarding-class #: 3):
    Tx rate: 0 Kb (5%), Buffer size: 5 percent
Priority low
    PLP high: 1, PLP low: 1, PLP medium-high: 1, PLP medium-low: 1
```

```
Interface: fe-0/0/1 (Index: 138, Map index: 2, Map type: FINAL,
 Num of queues: 2):
  Entry 0 (Scheduler index: 16, Forwarding-class #: 0):
    Tx rate: 0 Kb (95%), Buffer size: 95 percent
Priority low
    PLP high: 1, PLP low: 1, PLP medium-high: 1, PLP medium-low: 1
  Entry 1 (Scheduler index: 18, Forwarding-class #: 3):
    Tx rate: 0 Kb (5%), Buffer size: 5 percent
Priority low
    PLP high: 1, PLP low: 1, PLP medium-high: 1, PLP medium-low: 1

...

RED drop profile index: 1, # entries: 1
                              Drop
Entry      Fullness(%)   Probability(%)
    0              100              100
```

show class-of-service forwarding-table lcc (TX Matrix Plus Router)

```
user@host> show class-of-service forwarding-table lcc 0
```

```
lcc0-re0:
--------------------------------------------------------------------------

Classifier table index: 9, # entries: 64, Table type: IPv6 DSCP
Entry #   Code point   Forwarding-class #   PLP
   0        000000        0       0
   1        000001        0       0
   2        000010        0       0
   3        000011        0       0
   4        000100        0       0
   5        000101        0       0
   6        000110        0       0
   7        000111        0       0
   8        001000        0       0
   9        001001        0       0
  10        001010        0       0
  11        001011        0       0
  12        001100        0       0
  13        001101        0       0
  14        001110        0       0
  15        001111        0       0
  16        010000        0       0
  17        010001        0       0
  18        010010        0       0
  19        010011        0       0
  20        010100        0       0
  21        010101        0       0
  22        010110        0       0
  23        010111        0       0
  24        011000        0       0
  25        011001        0       0
  26        011010        0       0
  27        011011        0       0
  28        011100        0       0
  29        011101        0       0
  30        011110        0       0
  31        011111        0       0
  32        100000        0       0
```


Copyright © 2018, Juniper Networks, Inc.

```
  33          100001          0          0
  34          100010          0          0
  35          100011          0          0
  36          100100          0          0
  37          100101          0          0
  38          100110          0          0
  39          100111          0          0
  40          101000          0          0
  41          101001          0          0
  42          101010          0          0
  43          101011          0          0
  44          101100          0          0
  45          101101          0          0
  46          101110          0          0
...
```

show class-of-service forwarding-table classifier

Syntax

```
show class-of-service forwarding-table classifier
```

Release Information

Command introduced before Junos OS Release 7.4.
Command introduced in Junos OS Release 11.1 for the QFX Series.
Command introduced in Junos OS Release 14.1X53-D20 for the OCX Series.

Description

Display the mapping of code point value to queue number and loss priority for each classifier as it exists in the forwarding table.

Options

This command has no options.

Required Privilege Level

view

List of Sample Output

show class-of-service forwarding-table classifier on page 843

Output Fields

Table 161 on page 842 describes the output fields for the **show class-of-service forwarding-table classifier** command. Output fields are listed in the approximate order in which they appear.

Table 161: show class-of-service forwarding-table classifier Output Fields

Field Name	Field Description
Classifier table index	Index of the classifier table.
entries	Total number of entries.
Table type	Type of code points in the table: **DSCP**, **EXP** (not on the QFX Series), **IEEE 802.1**, **IPv4 precedence** (not on the QFX Series), or **IPv6 DSCP**.
Entry #	Entry number.
Code point	Code point value used for classification.
Forwarding-class #	Forwarding class to which the code point is assigned.
PLP	Packet loss priority value set by classification. For most platforms, the value can be **0** or **1**. For some platforms, the value is **0**, **1**, **2**, or **3**. The value **0** represents low PLP. The value **1** represents **high** PLP. The value **2** represents medium-low PLP. The value **3** represents medium-high PLP.

Copyright © 2018, Juniper Networks, Inc.

Sample Output

show class-of-service forwarding-table classifier

```
user@host> show class-of-service forwarding-table classifier

Classifier table index: 62436, # entries: 64, Table type: DSCP

Entry #   Code point   Forwarding-class #   PLP
   0        000000       0                  0
   1        000001       0                  0
   2        000010       0                  0
   3        000011       0                  0
   4        000100       0                  0
   5        000101       0                  0
   6        000110       0                  0
   7        000111       0                  0
   8        001000       0                  0
   9        001001       0                  0
  10        001010       1                  1
  11        001011       0                  0
...
  60        111100       0                  0
  61        111101       0                  0
  62        111110       0                  0
  63        111111       0                  0
```

show class-of-service forwarding-table classifier mapping

Syntax show class-of-service forwarding-table classifier mapping

Release Information Command introduced before Junos OS Release 7.4.
Command introduced in Junos OS Release 11.1 for the QFX Series.
Command introduced in Junos OS Release 14.1X53-D20 for the OCX Series.

Description For each logical interface, display either the table index of the classifier for a given code point type or the queue number (if it is a fixed classification) in the forwarding table.

Options This command has no options.

Required Privilege Level view

List of Sample Output show class-of-service forwarding-table classifier mapping on page 844

Output Fields Table 162 on page 844 describes the output fields for the **show class-of-service forwarding-table classifier mapping** command. Output fields are listed in the approximate order in which they appear.

Table 162: show class-of-service forwarding-table classifier mapping Output Fields

Field Name	Field Description
Table index/ Q num	If the table type is **Fixed**, the number of the queue to which the interface is mapped. For all other types, this value is the classifier index number.
Interface	Name of the logical interface. This field can also show the physical interface (QFX Series).
Index	Logical interface index.
Table type	Type of code points in the table: **DSCP**, **EXP** (not on the QFX Series), **Fixed**, **IEEE 802.1**, **IPv4 precedence** (not on the QFX Series),or **IPv6 DSCP**. **none** if **no-default** option set.

Sample Output

show class-of-service forwarding-table classifier mapping

user@host> **show class-of-service forwarding-table classifier mapping**

```
                        Table index/
Interface      Index     Q num      Table type
so-5/0/0.0        10     62436      DSCP
so-0/1/0.0        11     62436      DSCP
```

 Copyright © 2018, Juniper Networks, Inc.

```
so-0/2/0.0        12         1      Fixed
so-0/2/1.0        13     62436      DSCP
so-0/2/1.0        13     62437      IEEE 802.1
so-0/2/2.0        14     62436      DSCP
so-0/2/2.0        14     62438      IPv4 precedence
```

show class-of-service forwarding-table rewrite-rule

Syntax

show class-of-service forwarding-table rewrite-rule

Release Information

Command introduced before Junos OS Release 7.4.
Command introduced in Junos OS Release 11.1 for the QFX Series.
Command introduced in Junos OS Release 14.1X53-D20 for the OCX Series.

Description

Display mapping of queue number and loss priority to code point value for each rewrite rule as it exists in the forwarding table.

Options

This command has no options.

Required Privilege Level

view

List of Sample Output

show class-of-service forwarding-table rewrite-rule on page 846

Output Fields

Table 163 on page 846 describes the output fields for the **show class-of-service forwarding-table rewrite-rule** command. Output fields are listed in the approximate order in which they appear.

Table 163: show class-of-service forwarding-table rewrite-rule Output Fields

Field Name	Field Description
Rewrite table index	Index for this rewrite rule.
# entries	Number of entries in this rewrite rule.
Table type	Type of table: **DSCP**, **EXP** (not on the QFX Series), **EXP-PUSH-3** (not on the QFX Series), **IEEE 802.1**,**IPv4 precedence** (not on the QFX Series), **IPv6 DSCP**, or **Fixed**.
Q#	Queue number to which this entry is assigned.
Low bits	Code point value for low-priority loss profile.
State	State of this code point: **enabled**, **rewritten**, or **disabled**.
High bits	Code point value for high-priority loss profile.

Sample Output

show class-of-service forwarding-table rewrite-rule

```
user@host> show class-of-service forwarding-table rewrite-rule
```


Copyright © 2018, Juniper Networks, Inc.

```
Rewrite table index: 3753, # entries: 4, Table type: DSCP
Q#     Low bits  State      High bits  State
 0      000111  Enabled      001010   Enabled
 2      000000  Disabled     001100   Enabled
 1      101110  Enabled      110111   Enabled
 3      110000  Enabled      111000   Enabled
```

show class-of-service forwarding-table rewrite-rule mapping

Syntax

show class-of-service forwarding-table rewrite-rule mapping

Release Information

Command introduced before Junos OS Release 7.4.
Command introduced in Junos OS Release 11.1 for the QFX Series.
Command introduced in Junos OS Release 14.1X53-D20 for the OCX Series.

Description

For each logical interface, display the table identifier of the rewrite rule map for each code point type.

Options

This command has no options.

Required Privilege Level

view

List of Sample Output

show class-of-service forwarding-table rewrite-rule mapping on page 848

Output Fields

Table 164 on page 848 describes the output fields for the **show class-of-service forwarding-table rewrite-rule mapping** command. Output fields are listed in the approximate order in which they appear.

Table 164: show class-of-service forwarding-table rewrite-rule mapping Output Fields

Field Name	Field Description
Interface	Name of the logical interface. This field can also show the physical interface (QFX Series).
Index	Logical interface index.
Table index	Rewrite table index.
Type	Type of classifier: **DSCP**, **EXP** (not on the QFX Series), **EXP-PUSH-3** (not on the QFX Series), **EXP-SWAP-PUSH-2** (not on the QFX Series),**IEEE 802.1**, **IPv4 precedence** (not on the QFX Series), **IPv6 DSCP**, or **Fixed**.

Sample Output

show class-of-service forwarding-table rewrite-rule mapping

```
user@host> show class-of-service forwarding-table rewrite-rule mapping
Interface       Index   Table index  Type
so-5/0/0.0         10       3753  DSCP
so-0/1/0.0         11       3753  DSCP
so-0/2/0.0         12       3753  DSCP
so-0/2/1.0         13       3753  DSCP
```


Copyright © 2018, Juniper Networks, Inc.

```
so-0/2/2.0        14       3753  DSCP
so-0/2/3.0        15       3753  DSCP
```

show class-of-service interface

Syntax

```
show class-of-service interface
<comprehensive | detail> <interface-name>
```

Release Information

Command introduced before Junos OS Release 7.4.
Command introduced in Junos OS Release 9.0 for EX Series switches.
Forwarding class map information added in Junos OS Release 9.4.
Command introduced in Junos OS Release 11.1 for the QFX Series.
Command introduced in Junos OS Release 12.1 for the PTX Series Packet Transport routers.
Command introduced in Junos OS Release 12.2 for the ACX Series Universal Metro routers.
Command introduced in Junos OS Release 14.1X53-D20 for the OCX Series.
Options **detail** and **comprehensive** introduced in Junos OS Release 11.4.
Command introduced in Junos OS Release 15.1R3 on MX Series routers for enhanced subscriber management.

Description

Display the logical and physical interface associations for the classifier, rewrite rules, and scheduler map objects.

NOTE: **On routing platforms with dual Routing Engines, running this command on the backup Routing Engine, with or without any of the available options, is not supported and produces the following error message:**

error: the class-of-service subsystem is not running

Options

none—Display CoS associations for all physical and logical interfaces.

comprehensive—(M Series, MX Series, and T Series routers) (Optional) Display comprehensive quality-of-service (QoS) information about all physical and logical interfaces.

detail—(M Series, MX Series, and T Series routers) (Optional) Display QoS and CoS information based on the interface.

If the **interface** *interface-name* is a physical interface, the output includes:

- Brief QoS information about the physical interface
- Brief QoS information about the logical interface
- CoS information about the physical interface
- Brief information about filters or policers of the logical interface
- Brief CoS information about the logical interface

If the **interface** *interface-name* is a logical interface, the output includes:

Copyright © 2018, Juniper Networks, Inc.

- Brief QoS information about the logical interface
- Information about filters or policers for the logical interface
- CoS information about the logical interface

interface-name—(Optional) Display class-of-service (CoS) associations for the specified interface.

none—Display CoS associations for all physical and logical interfaces.

NOTE: ACX5000 routers do not support classification on logical interfaces and therefore do not show CoS associations for logical interfaces with this command.

Required Privilege Level view

Related Documentation

- *Verifying and Managing Junos OS Enhanced Subscriber Management*

List of Sample Output

show class-of-service interface (Physical) on page 863
show class-of-service interface (Logical) on page 863
show class-of-service interface (Gigabit Ethernet) on page 864
show class-of-service interface (ANCP) on page 864
show class-of-service interface (PPPoE Interface) on page 864
show class-of-service interface (DHCP Interface) on page 864
show class-of-service interface (T4000 Routers with Type 5 FPCs) on page 865
show class-of-service interface detail on page 865
show class-of-service interface comprehensive on page 866
show class-of-service interface (ACX Series Routers) on page 877
show class-of-service interface (PPPoE Subscriber Interface for Enhanced Subscriber Management) on page 879

Output Fields Table 148 on page 771 describes the output fields for the **show class-of-service interface** command. Output fields are listed in the approximate order in which they appear.

Table 165: show class-of-service interface Output Fields

Field Name	Field Description
Physical interface	Name of a physical interface.
Index	Index of this interface or the internal index of this object. (Enhanced subscriber management for MX Series routers) Index values for dynamic CoS traffic control profiles and dynamic scheduler maps are larger for enhanced subscriber management than they are for legacy subscriber management.

Table 165: show class-of-service interface Output Fields (continued)

Field Name	Field Description
Dedicated Queues	Status of dedicated queues configured on an interface. Supported only on Trio MPC/MIC interfaces on MX Series routers. (Enhanced subscriber management for MX-Series routers) This field is not displayed for enhanced subscriber management.
Maximum usable queues	Number of queues you can configure on the interface.
Maximum usable queues	Maximum number of queues you can use.
Total non-default queues created	Number of queues created in addition to the default queues. Supported only on Trio MPC/MIC interfaces on MX Series routers. (Enhanced subscriber management for MX Series routers) This field is not displayed for enhanced subscriber management.
Rewrite Input IEEE Code-point	(QFX3500 switches only) IEEE 802.1p code point (priority) rewrite value. Incoming traffic from the Fibre Channel (FC) SAN is classified into the forwarding class specified in the native FC interface (NP_Port) fixed classifier and uses the priority specified as the IEEE 802.1p rewrite value.
Shaping rate	Maximum transmission rate on the physical interface. You can configure the shaping rate on the physical interface, or on the logical interface, but not on both. Therefore, the **Shaping rate** field is displayed for either the physical interface or the logical interface.
Scheduler map	Name of the output scheduler map associated with this interface. (Enhanced subscriber management for MX Series routers) The name of the dynamic scheduler map object is associated with a generated UID (for example, **SMAP-1_UID1002**) instead of with a subscriber interface.
Scheduler map forwarding class sets	(QFX Series only) Name of the output fabric scheduler map associated with a QFabric system Interconnect device interface.
Input shaping rate	For Gigabit Ethernet IQ2 PICs, maximum transmission rate on the input interface.
Input scheduler map	For Gigabit Ethernet IQ2 PICs, name of the input scheduler map associated with this interface.
Chassis scheduler map	Name of the scheduler map associated with the packet forwarding component queues.
Rewrite	Name and type of the rewrite rules associated with this interface.
Traffic-control-profile	Name of the associated traffic control profile. (Enhanced subscriber management for MX Series routers) The name of the dynamic traffic control profile object is associated with a generated UID (for example, **TC_PROF_100_199_SERIES_UID1006**) instead of with a subscriber interface.
Classifier	Name and type of classifiers associated with this interface.

Copyright © 2018, Juniper Networks, Inc.

Table 165: show class-of-service interface Output Fields (continued)

Field Name	Field Description
Forwarding-class-map	Name of the forwarding map associated with this interface.
Congestion-notification	(QFX Series and EX4600 switches only) Congestion notification state, **enabled** or **disabled**.
Logical interface	Name of a logical interface.
Object	Category of an object: **Classifier**, **Fragmentation-map** (for LSQ interfaces only), **Scheduler-map**, **Rewrite**, **Translation Table** (for IQE PICs only), or **traffic-class-map** (for T4000 routers with Type 5 FPCs).
Name	Name of an object.
Type	Type of an object: **dscp**, **dscp-ipv6**, **exp**, **ieee-802.1**, **ip**, **inet-precedence**, or **ieee-802.1ad** (for traffic class map on T4000 routers with Type 5 FPCs)..
Link-level type	Encapsulation on the physical interface.
MTU	MTU size on the physical interface.
Speed	Speed at which the interface is running.
Loopback	Whether loopback is enabled and the type of loopback.
Source filtering	Whether source filtering is enabled or disabled.
Flow control	Whether flow control is enabled or disabled.
Auto-negotiation	(Gigabit Ethernet interfaces) Whether autonegotiation is enabled or disabled.
Remote-fault	(Gigabit Ethernet interfaces) Remote fault status. • **Online**—Autonegotiation is manually configured as online. • **Offline**—Autonegotiation is manually configured as offline.

Table 165: show class-of-service interface Output Fields (continued)

Field Name	Field Description
Device flags	The **Device flags** field provides information about the physical device and displays one or more of the following values: • **Down**—Device has been administratively disabled. • **Hear-Own-Xmit**—Device receives its own transmissions. • **Link-Layer-Down**—The link-layer protocol has failed to connect with the remote endpoint. • **Loopback**—Device is in physical loopback. • **Loop-Detected**—The link layer has received frames that it sent, thereby detecting a physical loopback. • **No-Carrier**—On media that support carrier recognition, no carrier is currently detected. • **No-Multicast**—Device does not support multicast traffic. • **Present**—Device is physically present and recognized. • **Promiscuous**—Device is in promiscuous mode and recognizes frames addressed to all physical addresses on the media. • **Quench**—Transmission on the device is quenched because the output buffer is overflowing. • **Recv-All-Multicasts**—Device is in multicast promiscuous mode and therefore provides no multicast filtering. • **Running**—Device is active and enabled.

Interface flags	The **Interface flags** field provides information about the physical interface and displays one or more of the following values:
	• **Admin-Test**—Interface is in test mode and some sanity checking, such as loop detection, is disabled.
	• **Disabled**—Interface is administratively disabled.
	• **Down**—A hardware failure has occurred.
	• **Hardware-Down**—Interface is nonfunctional or incorrectly connected.
	• **Link-Layer-Down**—Interface keepalives have indicated that the link is incomplete.
	• **No-Multicast**—Interface does not support multicast traffic.
	• **No-receive No-transmit**—Passive monitor mode is configured on the interface.
	• **Point-To-Point**—Interface is point-to-point.
	• **Pop all MPLS labels from packets of depth**—MPLS labels are removed as packets arrive on an interface that has the **pop-all-labels** statement configured. The depth value can be one of the following:
	  ◦ **1**—Takes effect for incoming packets with one label only.
	  ◦ **2**—Takes effect for incoming packets with two labels only.
	  ◦ **[1 2]**—Takes effect for incoming packets with either one or two labels.
	• **Promiscuous**—Interface is in promiscuous mode and recognizes frames addressed to all physical addresses.
	• **Recv-All-Multicasts**—Interface is in multicast promiscuous mode and provides no multicast filtering.
	• **SNMP-Traps**—SNMP trap notifications are enabled.
	• **Up**—Interface is enabled and operational.

Copyright © 2018, Juniper Networks, Inc.

Table 165: show class-of-service interface Output Fields (continued)

Field Name	Field Description
Flags	The **Logical interface flags** field provides information about the logical interface and displays one or more of the following values: • **ACFC Encapsulation**—Address control field Compression (ACFC) encapsulation is enabled (negotiated successfully with a peer). • **Device-down**—Device has been administratively disabled. • **Disabled**—Interface is administratively disabled. • **Down**—A hardware failure has occurred. • **Clear-DF-Bit**—GRE tunnel or IPsec tunnel is configured to clear the Don't Fragment (DF) bit. • **Hardware-Down**—Interface protocol initialization failed to complete successfully. • **PFC**—Protocol field compression is enabled for the PPP session. • **Point-To-Point**—Interface is point-to-point. • **SNMP-Traps**—SNMP trap notifications are enabled. • **Up**—Interface is enabled and operational.
Encapsulation	Encapsulation on the logical interface.
Admin	Administrative state of the interface (**Up** or **Down**)
Link	Status of physical link (**Up** or **Down**).
Proto	Protocol configured on the interface.
Input Filter	Names of any firewall filters to be evaluated when packets are received on the interface, including any filters attached through activation of dynamic service.
Output Filter	Names of any firewall filters to be evaluated when packets are transmitted on the interface, including any filters attached through activation of dynamic service.
Link flags	Provides information about the physical link and displays one or more of the following values: • **ACFC**—Address control field compression is configured. The Point-to-Point Protocol (PPP) session negotiates the ACFC option. • **Give-Up**—Link protocol does not continue connection attempts after repeated failures. • **Loose-LCP**—PPP does not use the Link Control Protocol (LCP) to indicate whether the link protocol is operational. • **Loose-LMI**—Frame Relay does not use the Local Management Interface (LMI) to indicate whether the link protocol is operational. • **Loose-NCP**—PPP does not use the Network Control Protocol (NCP) to indicate whether the device is operational. • **Keepalives**—Link protocol keepalives are enabled. • **No-Keepalives**—Link protocol keepalives are disabled. • **PFC**—Protocol field compression is configured. The PPP session negotiates the PFC option.
Hold-times	Current interface hold-time up and hold-time down, in milliseconds.
CoS queues	Number of CoS queues configured.

Copyright © 2018, Juniper Networks, Inc.

Table 165: show class-of-service interface Output Fields (continued)

Field Name	Field Description
Last flapped	Date, time, and how long ago the interface went from down to up. The format is **Last flapped:** ***year-month-day hour:minute:second:timezone*** **(*hour:minute:second* ago)**. For example, **Last flapped: 2002-04-26 10:52:40 PDT (04:33:20 ago).**
Statistics last cleared	Number and rate of bytes and packets received and transmitted on the physical interface. • **Input bytes**—Number of bytes received on the interface. • **Output bytes**—Number of bytes transmitted on the interface. • **Input packets**—Number of packets received on the interface. • **Output packets**—Number of packets transmitted on the interface.
Exclude Overhead Bytes	Exclude the counting of overhead bytes from aggregate queue statistics. • **Disabled**—Default configuration. Includes the counting of overhead bytes in aggregate queue statistics. • **Enabled**—Excludes the counting of overhead bytes from aggregate queue statistics for just the physical interface. • **Enabled for hierarchy**—Excludes the counting of overhead bytes from aggregate queue statistics for the physical interface as well as all child interfaces, including logical interfaces and interface sets.
IPv6 transit statistics	Number of IPv6 transit bytes and packets received and transmitted on the logical interface if IPv6 statistics tracking is enabled.
Input errors	Input errors on the interface. The labels are explained in the following list: • **Errors**—Sum of the incoming frame aborts and FCS errors. • **Drops**—Number of packets dropped by the input queue of the I/O Manager ASIC. If the interface is saturated, this number increments once for every packet that is dropped by the ASIC's RED mechanism. • **Framing errors**—Number of packets received with an invalid frame checksum (FCS). • **Runts**—Number of frames received that are smaller than the runt threshold. • **Giants**—Number of frames received that are larger than the giant threshold. • **Bucket Drops**—Drops resulting from the traffic load exceeding the interface transmit or receive leaky bucket configuration. • **Policed discards**—Number of frames that the incoming packet match code discarded because they were not recognized or not of interest. Usually, this field reports protocols that Junos OS does not handle. • **L3 incompletes**—Number of incoming packets discarded because they failed Layer 3 (usually IPv4) sanity checks of the header. For example, a frame with less than 20 bytes of available IP header is discarded. Layer 3 incomplete errors can be ignored by configuring the **ignore-l3-incompletes** statement. • **L2 channel errors**—Number of times the software did not find a valid logical interface for an incoming frame. • **L2 mismatch timeouts**—Number of malformed or short packets that caused the incoming packet handler to discard the frame as unreadable. • **HS link CRC errors**—Number of errors on the high-speed links between the ASICs responsible for handling the router interfaces. • **HS link FIFO overflows**—Number of FIFO overflows on the high-speed links between the ASICs responsible for handling the router interfaces.

Copyright © 2018, Juniper Networks, Inc.

Table 165: show class-of-service interface Output Fields (continued)

Field Name	Field Description
Output errors	Output errors on the interface. The labels are explained in the following list: • **Carrier transitions**—Number of times the interface has gone from **down** to **up**. This number does not normally increment quickly, increasing only when the cable is unplugged, the far-end system is powered down and up, or another problem occurs. If the number of carrier transitions increments quickly (perhaps once every 10 seconds), the cable, the far-end system, or the PIC is malfunctioning. • **Errors**—Sum of the outgoing frame aborts and FCS errors. • **Drops**—Number of packets dropped by the output queue of the I/O Manager ASIC. If the interface is saturated, this number increments once for every packet that is dropped by the ASIC's RED mechanism. NOTE: Due to accounting space limitations on certain Type 3 FPCs (which are supported in M320 and T640 routers), the **Drops** field does not always use the correct value for queue 6 or queue 7 for interfaces on 10-port 1-Gigabit Ethernet PICs. • **Aged packets**—Number of packets that remained in shared packet SDRAM so long that the system automatically purged them. The value in this field should never increment. If it does, it is most likely a software bug or possibly malfunctioning hardware. • **HS link FIFO underflows**—Number of FIFO underflows on the high-speed links between the ASICs responsible for handling the router interfaces. • **MTU errors**—Number of packets whose size exceeds the MTU of the interface.
Egress queues	Total number of egress Maximum usable queues on the specified interface.
Queue counters	CoS queue number and its associated user-configured forwarding class name. • **Queued packets**—Number of queued packets. • **Transmitted packets**—Number of transmitted packets. • **Dropped packets**—Number of packets dropped by the ASIC's RED mechanism. NOTE: Due to accounting space limitations on certain Type 3 FPCs (which are supported in M320 and T640 routers), the **Dropped packets** field does not always display the correct value for queue 6 or queue 7 for interfaces on 10-port 1-Gigabit Ethernet PICs.
SONET alarms **SONET defects**	(SONET) SONET media-specific alarms and defects that prevent the interface from passing packets. When a defect persists for a certain period, it is promoted to an alarm. Based on the router configuration, an alarm can ring the red or yellow alarm bell on the router or light the red or yellow alarm LED on the craft interface. See these fields for possible alarms and defects: **SONET PHY**, **SONET section**, **SONET line**, and **SONET path**.
SONET PHY	Counts of specific SONET errors with detailed information. • **Seconds**—Number of seconds the defect has been active. • **Count**—Number of times that the defect has gone from inactive to active. • **State**—State of the error. A state other than **OK** indicates a problem. The **SONET PHY** field has the following subfields: • **PLL Lock**—Phase-locked loop • **PHY Light**—Loss of optical signal

Table 165: show class-of-service interface Output Fields (continued)

Field Name	Field Description
SONET section	Counts of specific SONET errors with detailed information. • **Seconds**—Number of seconds the defect has been active. • **Count**—Number of times that the defect has gone from inactive to active. • **State**—State of the error. A state other than **OK** indicates a problem. The **SONET section** field has the following subfields: • **BIP-B1**—Bit interleaved parity for SONET section overhead • **SEF**—Severely errored framing • **LOS**—Loss of signal • **LOF**—Loss of frame • **ES-S**—Errored seconds (section) • **SES-S**—Severely errored seconds (section) • **SEFS-S**—Severely errored framing seconds (section)
SONET line	Active alarms and defects, plus counts of specific SONET errors with detailed information. • **Seconds**—Number of seconds the defect has been active. • **Count**—Number of times that the defect has gone from inactive to active. • **State**—State of the error. A state other than **OK** indicates a problem. The **SONET line** field has the following subfields: • **BIP-B2**—Bit interleaved parity for SONET line overhead • **REI-L**—Remote error indication (near-end line) • **RDI-L**—Remote defect indication (near-end line) • **AIS-L**—Alarm indication signal (near-end line) • **BERR-SF**—Bit error rate fault (signal failure) • **BERR-SD**—Bit error rate defect (signal degradation) • **ES-L**—Errored seconds (near-end line) • **SES-L**—Severely errored seconds (near-end line) • **UAS-L**—Unavailable seconds (near-end line) • **ES-LFE**—Errored seconds (far-end line) • **SES-LFE**—Severely errored seconds (far-end line) • **UAS-LFE**—Unavailable seconds (far-end line)

Copyright © 2018, Juniper Networks, Inc.

Table 165: show class-of-service interface Output Fields (continued)

Field Name	Field Description
SONET path	Active alarms and defects, plus counts of specific SONET errors with detailed information. • **Seconds**—Number of seconds the defect has been active. • **Count**—Number of times that the defect has gone from inactive to active. • **State**—State of the error. A state other than **OK** indicates a problem. The **SONET path** field has the following subfields: • **BIP-B3**—Bit interleaved parity for SONET section overhead • **REI-P**—Remote error indication • **LOP-P**—Loss of pointer (path) • **AIS-P**—Path alarm indication signal • **RDI-P**—Path remote defect indication • **UNEQ-P**—Path unequipped • **PLM-P**—Path payload (signal) label mismatch • **ES-P**—Errored seconds (near-end STS path) • **SES-P**—Severely errored seconds (near-end STS path) • **UAS-P**—Unavailable seconds (near-end STS path) • **ES-PFE**—Errored seconds (far-end STS path) • **SES-PFE**—Severely errored seconds (far-end STS path) • **UAS-PFE**—Unavailable seconds (far-end STS path)
Received SONET overhead **Transmitted SONET overhead**	Values of the received and transmitted SONET overhead: • **C2**—Signal label. Allocated to identify the construction and content of the STS-level SPE and for PDI-P. • **F1**—Section user channel byte. This byte is set aside for the purposes of users. • **K1** and **K2**—These bytes are allocated for APS signaling for the protection of the multiplex section. • **J0**—Section trace. This byte is defined for STS-1 number 1 of an STS-*N* signal. Used to transmit a 1-byte fixed-length string or a 16-byte message so that a receiving terminal in a section can verify its continued connection to the intended transmitter. • **S1**—Synchronization status. The S1 byte is located in the first STS-1 number of an STS-*N* signal. • **Z3** and **Z4**—Allocated for future use.
Received path trace **Transmitted path trace**	SONET/SDH interfaces allow path trace bytes to be sent inband across the SONET/SDH link. Juniper Networks and other router manufacturers use these bytes to help diagnose misconfigurations and network errors by setting the transmitted path trace message so that it contains the system hostname and name of the physical interface. The received path trace value is the message received from the router at the other end of the fiber. The transmitted path trace value is the message that this router transmits.
HDLC configuration	Information about the HDLC configuration. • **Policing bucket**—Configured state of the receiving policer. • **Shaping bucket**—Configured state of the transmitting shaper. • **Giant threshold**—Giant threshold programmed into the hardware. • **Runt threshold**—Runt threshold programmed into the hardware.

Copyright © 2018, Juniper Networks, Inc.

Table 165: show class-of-service interface Output Fields (continued)

Field Name	Field Description
Packet Forwarding Engine configuration	Information about the configuration of the Packet Forwarding Engine: • **Destination slot**—FPC slot number. • **PLP byte**—Packet Level Protocol byte.
CoS information	Information about the CoS queue for the physical interface. • **CoS transmit queue**—Queue number and its associated user-configured forwarding class name. • **Bandwidth %**—Percentage of bandwidth allocated to the queue. • **Bandwidth bps**—Bandwidth allocated to the queue (in bps). • **Buffer %**—Percentage of buffer space allocated to the queue. • **Buffer usec**—Amount of buffer space allocated to the queue, in microseconds. This value is nonzero only if the buffer size is configured in terms of time. • **Priority**—Queue priority: **low** or **high**. • **Limit**—Displayed if rate limiting is configured for the queue. Possible values are **none** and **exact**. If **exact** is configured, the queue transmits only up to the configured bandwidth, even if excess bandwidth is available. If **none** is configured, the queue transmits beyond the configured bandwidth if bandwidth is available.
Forwarding classes	Total number of forwarding classes supported on the specified interface.
Egress queues	Total number of egress Maximum usable queues on the specified interface.
Queue	Queue number.
Forwarding classes	Forwarding class name.
Queued Packets	Number of packets queued to this queue.
Queued Bytes	Number of bytes queued to this queue. The byte counts vary by PIC type.
Transmitted Packets	Number of packets transmitted by this queue. When fragmentation occurs on the egress interface, the first set of packet counters shows the postfragmentation values. The second set of packet counters (displayed under the **Packet Forwarding Engine Chassis Queues** field) shows the prefragmentation values.
Transmitted Bytes	Number of bytes transmitted by this queue. The byte counts vary by PIC type.
Tail-dropped packets	Number of packets dropped because of tail drop.

Copyright © 2018, Juniper Networks, Inc.

Table 165: show class-of-service interface Output Fields (continued)

Field Name	Field Description

RED-dropped packets	Number of packets dropped because of random early detection (RED).
	• (M Series and T Series routers only) On M320 and M120 routers and the T Series routers, the total number of dropped packets is displayed. On all other M Series routers, the output classifies dropped packets into the following categories:
	  • **Low, non-TCP**—Number of low-loss priority non-TCP packets dropped because of RED.
	  • **Low, TCP**—Number of low-loss priority TCP packets dropped because of RED.
	  • **High, non-TCP**—Number of high-loss priority non-TCP packets dropped because of RED.
	  • **High, TCP**—Number of high-loss priority TCP packets dropped because of RED.
	• (MX Series routers with enhanced DPCs, and T Series routers with enhanced FPCs only) The output classifies dropped packets into the following categories:
	  • **Low**—Number of low-loss priority packets dropped because of RED.
	  • **Medium-low**—Number of medium-low loss priority packets dropped because of RED.
	  • **Medium-high**—Number of medium-high loss priority packets dropped because of RED.
	  • **High**—Number of high-loss priority packets dropped because of RED.
	NOTE: Due to accounting space limitations on certain Type 3 FPCs (which are supported in M320 and T640 routers), this field does not always display the correct value for queue 6 or queue 7 for interfaces on 10-port 1-Gigabit Ethernet PICs.

RED-dropped bytes	Number of bytes dropped because of RED. The byte counts vary by PIC type.
	• (M Series and T Series routers only) On M320 and M120 routers and the T Series routers, only the total number of dropped bytes is displayed. On all other M Series routers, the output classifies dropped bytes into the following categories:
	  • **Low, non-TCP**—Number of low-loss priority non-TCP bytes dropped because of RED.
	  • **Low, TCP**—Number of low-loss priority TCP bytes dropped because of RED.
	  • **High, non-TCP**—Number of high-loss priority non-TCP bytes dropped because of RED.
	  • **High, TCP**—Number of high-loss priority TCP bytes dropped because of RED.
	NOTE: Due to accounting space limitations on certain Type 3 FPCs (which are supported in M320 and T640 routers), this field does not always display the correct value for queue 6 or queue 7 for interfaces on 10-port 1-Gigabit Ethernet PICs.

Transmit rate	Configured transmit rate of the scheduler. The rate is a percentage of the total interface bandwidth.
Rate Limit	Rate limiting configuration of the queue. Possible values are : • **None**—No rate limit. • **exact**—Queue transmits at the configured rate.
Buffer size	Delay buffer size in the queue.
Priority	Scheduling priority configured as **low** or **high**.
Excess Priority	Priority of the excess bandwidth traffic on a scheduler: **low**, **medium-low**, **medium-high**, **high**, or **none**.

Table 165: show class-of-service interface Output Fields (continued)

Field Name	Field Description
Drop profiles	Display the assignment of drop profiles. • **Loss priority**—Packet loss priority for drop profile assignment. • **Protocol**—Transport protocol for drop profile assignment. • **Index**—Index of the indicated object. Objects that have indexes in this output include schedulers and drop profiles. • **Name**—Name of the drop profile. • **Type**—Type of the drop profile: **discrete** or **interpolated**. • **Fill Level**—Percentage fullness of a queue. • **Drop probability**—Drop probability at this fill level.
Excess Priority	Priority of the excess bandwidth traffic on a scheduler.
Drop profiles	Display the assignment of drop profiles. • **Loss priority**—Packet loss priority for drop profile assignment. • **Protocol**—Transport protocol for drop profile assignment. • **Index**—Index of the indicated object. Objects that have indexes in this output include schedulers and drop profiles. • **Name**—Name of the drop profile. • **Type**—Type of the drop profile: **discrete** or **interpolated**. • **Fill Level**—Percentage fullness of a queue. • **Drop probability**—Drop probability at this fill level.

Copyright © 2018, Juniper Networks, Inc.

Table 165: show class-of-service interface Output Fields (continued)

Field Name	Field Description

Adjustment information	Display the assignment of shaping-rate adjustments on a scheduler node or queue.
	• **Adjusting application**—Application that is performing the shaping-rate adjustment.
	  ◦ The adjusting application can appear as **ancp LS-0**, which is the Junos OS Access Node Control Profile process (**ancpd**) that performs shaping-rate adjustments on schedule nodes.
	  ◦ The adjusting application can appear as **DHCP**, which adjusts the shaping-rate and overhead-accounting class-of-service attributes based on DHCP option 82, suboption 9 (Vendor Specific Information). The shaping rate is based on the actual-data-rate-downstream attribute. The overhead accounting value is based on the access-loop-encapsulation attribute and specifies whether the access loop uses Ethernet (frame mode) or ATM (cell mode).
	  ◦ The adjusting application can also appear as **pppoe**, which adjusts the shaping-rate and overhead-accounting class-of-service attributes on dynamic subscriber interfaces in a broadband access network based on access line parameters in Point-to-Point Protocol over Ethernet (PPPoE) Tags [TR-101]. This feature is supported on MPC/MIC interfaces on MX Series routers. The shaping rate is based on the actual-data-rate-downstream attribute. The overhead accounting value is based on the access-loop-encapsulation attribute and specifies whether the access loop uses Ethernet (frame mode) or ATM (cell mode).
	• **Adjustment type**—Type of adjustment: **absolute** or **delta**.
	• **Configured shaping rate**—Shaping rate configured for the scheduler node or queue.
	• **Adjustment value**—Value of adjusted shaping rate.
	• **Adjustment target**—Level of shaping-rate adjustment performed: **node** or **queue**.
	• **Adjustment overhead-accounting mode**—Configured shaping mode: **frame** or **cell**.
	• **Adjustment overhead bytes**—Number of bytes that the ANCP agent adds to or subtracts from the actual downstream frame overhead before reporting the adjusted values to CoS.
	• **Adjustment target**—Level of shaping-rate adjustment performed: **node** or **queue**.
	• **Adjustment multicast index**—

Sample Output

show class-of-service interface (Physical)

```
user@host> show class-of-service interface so-0/2/3
```

```
Physical interface: so-0/2/3, Index: 135
Maximum usable queues: 8, Queues in use: 4
Total non-default queues created: 4
  Scheduler map: <default>, Index: 2032638653

  Logical interface: fe-0/0/1.0, Index: 68, Dedicated Queues: no
    Shaping rate: 32000
    Object                  Name                  Type           Index
    Scheduler-map           <default>                             27
    Rewrite                 exp-default           exp             21
    Classifier              exp-default           exp             5
    Classifier              ipprec-compatibility  ip              8
    Forwarding-class-map    exp-default           exp             5
```

show class-of-service interface (Logical)

```
user@host> show class-of-service interface so-0/2/3.0
```

```
Logical interface: so-0/2/3.0, Index: 68, Dedicated Queues: no
    Shaping rate: 32000
    Object                  Name                  Type            Index
    Scheduler-map           <default>                              27
    Rewrite                 exp-default           exp              21
    Classifier              exp-default           exp              5
    Classifier              ipprec-compatibility  ip               8
    Forwarding-class-map    exp-default           exp              5
```

show class-of-service interface (Gigabit Ethernet)

```
user@host> show class-of-service interface ge-6/2/0
```

```
Physical interface: ge-6/2/0, Index: 175
Maximum usable queues: 4, Queues in use: 4
  Scheduler map: <default>, Index: 2
  Input scheduler map: <default>, Index: 3
  Chassis scheduler map: <default-chassis>, Index: 4
```

show class-of-service interface (ANCP)

```
user@host> show class-of-service interface pp0.1073741842
```

```
  Logical interface: pp0.1073741842, Index: 341
Object                  Name                    Type                    Index
Traffic-control-profile TCP-CVLAN               Output                  12408
Classifier              dscp-ipv6-compatibility dscp-ipv6                   9
Classifier              ipprec-compatibility    ip                         13

    Adjusting application: ancp LS-0
      Adjustment type: absolute
      Configured shaping rate: 4000000
      Adjustment value: 11228000
      Adjustment overhead-accounting mode: Frame Mode
      Adjustment overhead bytes: 50
      Adjustment target: node
```

show class-of-service interface (PPPoE Interface)

```
user@host> show class-of-service interface pp0.1
```

```
Logical interface: pp0.1, Index: 85
    Object                  Name                    Type           Index
    Traffic-control-profile tcp-pppoe.o.pp0.1       Output         2726446535
    Classifier              ipprec-compatibility    ip             13

    Adjusting application: PPPoE
      Adjustment type: absolute
      Adjustment value: 5000000
      Adjustment overhead-accounting mode: cell
      Adjustment target: node
```

show class-of-service interface (DHCP Interface)

```
user@host> show class-of-service interface demux0.1
```

```
Logical interface: pp0.1, Index: 85
    Object                  Name                    Type           Index
    Traffic-control-profile tcp-dhcp.o.demux0.1     Output         2726446535
```


Copyright © 2018, Juniper Networks, Inc.

```
    Classifier              ipprec-compatibility   ip             13

    Adjusting application: DHCP
      Adjustment type: absolute
      Adjustment value: 5000000
      Adjustment overhead-accounting mode: cell
      Adjustment target: node
```

show class-of-service interface (T4000 Routers with Type 5 FPCs)

user@host> **show class-of-service interface xe-4/0/0**

```
Physical interface: xe-4/0/0, Index: 153
    Maximum usable queues: 8, Queues in use: 4
      Shaping rate: 5000000000 bps
      Scheduler map: <default>, Index: 2
      Congestion-notification: Disabled

      Logical interface: xe-4/0/0.0, Index: 77
        Object                  Name                   Type
Index
        Classifier              ipprec-compatibility   ip
  13
```

show class-of-service interface detail

user@host> **show class-of-service interface ge-0/3/0 detail**

```
Physical interface: ge-0/3/0, Enabled, Physical link is Up
  Link-level type: Ethernet, MTU: 1518, Speed: 1000mbps, Loopback: Disabled,
Source filtering: Disabled, Flow control: Enabled, Auto-negotiation: Enabled,
Remote fault: Online
  Device flags   : Present Running
  Interface flags: SNMP-Traps Internal: 0x4000

  Physical interface: ge-0/3/0, Index: 138
  Maximum usable queues: 4, Queues in use: 5
  Shaping rate: 50000 bps
  Scheduler map: interface-schedular-map, Index: 58414
  Input shaping rate: 10000 bps
  Input scheduler map: schedular-map, Index: 15103
  Chassis scheduler map: <default-chassis>, Index: 4
  Congestion-notification: Disabled

  Logical interface ge-0/3/0.0
    Flags: SNMP-Traps 0x4000 VLAN-Tag [ 0x8100.1 ]  Encapsulation: ENET2
    inet
    mpls
Interface       Admin Link Proto Input Filter         Output Filter
ge-0/3/0.0      up    up   inet
                           mpls
Interface       Admin Link Proto Input Policer         Output Policer
ge-0/3/0.0      up    up   inet
                           mpls

  Logical interface: ge-0/3/0.0, Index: 68
    Object                  Name                   Type               Index
    Rewrite                 exp-default            exp (mpls-any)       33
```

```
    Classifier              exp-default            exp                  10
    Classifier              ipprec-compatibility   ip                   13


  Logical interface ge-0/3/0.1
    Flags: SNMP-Traps 0x4000 VLAN-Tag [ 0x8100.2 ]  Encapsulation: ENET2
    inet
Interface       Admin Link Proto Input Filter         Output Filter
ge-0/3/0.1      up    up   inet
Interface       Admin Link Proto Input Policer         Output Policer
ge-0/3/0.1      up    up   inet

  Logical interface: ge-0/3/0.1, Index: 69
    Object                  Name                   Type            Index
    Classifier              ipprec-compatibility   ip               13
```

show class-of-service interface comprehensive

user@host> **show class-of-service interface ge-0/3/0 comprehensive**

```
Physical interface: ge-0/3/0, Enabled, Physical link is Up
  Interface index: 138, SNMP ifIndex: 601, Generation: 141
  Link-level type: Ethernet, MTU: 1518, Speed: 1000mbps, BPDU Error: None,
MAC-REWRITE Error: None, Loopback: Disabled, Source filtering: Disabled, Flow
control: Enabled,
  Auto-negotiation: Enabled, Remote fault: Online
  Device flags   : Present Running
  Interface flags: SNMP-Traps Internal: 0x4000
  CoS queues     : 4 supported, 4 maximum usable queues
  Schedulers     : 256
  Hold-times     : Up 0 ms, Down 0 ms
  Current address: 00:14:f6:f4:b4:5d, Hardware address: 00:14:f6:f4:b4:5d
  Last flapped   : 2010-09-07 06:35:22 PDT (15:14:42 ago)
  Statistics last cleared: Never  Exclude Overhead Bytes: Disabled
  Traffic statistics:
   Input  bytes  :                   0                    0 bps
   Output bytes  :                   0                    0 bps
   Input  packets:                   0                    0 pps
   Output packets:                   0                    0 pps
   IPv6 total statistics:
    Input  bytes  :                  0
    Output bytes  :                  0
    Input  packets:                  0
    Output packets:                  0
  Ingress traffic statistics at Packet Forwarding Engine:
   Input  bytes  :                   0                    0 bps
   Input  packets:                   0                    0 pps
   Drop   bytes  :                   0                    0 bps
   Drop   packets:                   0                    0 pps
  Label-switched interface (LSI) traffic statistics:
   Input  bytes  :                   0                    0 bps
   Input  packets:                   0                    0 pps
  Input errors:
    Errors: 0, Drops: 0, Framing errors: 0, Runts: 0, Policed discards: 0, L3
incompletes: 0, L2 channel errors: 0, L2 mismatch timeouts: 0, FIFO errors: 0,
Resource errors: 0
  Output errors:
    Carrier transitions: 5, Errors: 0, Drops: 0, Collisions: 0, Aged packets: 0,
 FIFO errors: 0, HS link CRC errors: 0, MTU errors: 0, Resource errors: 0
  Ingress queues: 4 supported, 5 in use
```


Copyright © 2018, Juniper Networks, Inc.

```
  Queue counters:       Queued packets  Transmitted packets      Dropped packets

    0 af3                           0                    0                    0

    1 af2                           0                    0                    0

    2 ef2                           0                    0                    0

    3 ef1                           0                    0                    0

  Egress queues: 4 supported, 5 in use
  Queue counters:       Queued packets  Transmitted packets      Dropped packets

    0 af3                           0                    0                    0

    1 af2                           0                    0                    0

    2 ef2                           0                    0                    0

    3 ef1                           0                    0                    0

  Active alarms  : None
  Active defects : None
  MAC statistics:                      Receive         Transmit
    Total octets                             0                0
    Total packets                            0                0
    Unicast packets                          0                0
    Broadcast packets                        0                0
    Multicast packets                        0                0
    CRC/Align errors                         0                0
    FIFO errors                              0                0
    MAC control frames                       0                0
    MAC pause frames                         0                0
    Oversized frames                         0
    Jabber frames                            0
    Fragment frames                          0
    VLAN tagged frames                       0
    Code violations                          0
  Filter statistics:
    Input packet count                       0
    Input packet rejects                     0
    Input DA rejects                         0
    Input SA rejects                         0
    Output packet count                                       0
    Output packet pad count                                   0
    Output packet error count                                 0
    CAM destination filters: 0, CAM source filters: 0
  Autonegotiation information:
    Negotiation status: Complete
    Link partner:
       Link mode: Full-duplex, Flow control: Symmetric/Asymmetric, Remote fault:
 OK
    Local resolution:
      Flow control: Symmetric, Remote fault: Link OK
  Packet Forwarding Engine configuration:
    Destination slot: 0
  CoS information:
    Direction : Output
    CoS transmit queue                Bandwidth                Buffer Priority
Limit
```

```
                              %            bps     %           usec
    2 ef2                    39          19500     0            120     high
none
    Direction : Input
    CoS transmit queue               Bandwidth               Buffer Priority
Limit
                              %            bps     %           usec
    0 af3                    30           3000    45              0      low
none

Physical interface: ge-0/3/0, Enabled, Physical link is Up
  Interface index: 138, SNMP ifIndex: 601
Forwarding classes: 16 supported, 5 in use
Ingress queues: 4 supported, 5 in use
Queue: 0, Forwarding classes: af3
  Queued:
    Packets              :                     0                     0 pps
    Bytes                :                     0                     0 bps
  Transmitted:
    Packets              :                     0                      0 pps
    Bytes                :                     0                     0 bps
    Tail-dropped packets : Not Available
    RED-dropped packets  :                     0                     0 pps
    RED-dropped bytes    :                     0                     0 bps
Queue: 1, Forwarding classes: af2
  Queued:
    Packets              :                     0                     0 pps
    Bytes                :                     0                     0 bps
  Transmitted:
    Packets              :                     0                      0 pps
    Bytes                :                     0                     0 bps
    Tail-dropped packets : Not Available
    RED-dropped packets  :                     0                     0 pps
    RED-dropped bytes    :                     0                     0 bps
Queue: 2, Forwarding classes: ef2
  Queued:
    Packets              :                     0                     0 pps
    Bytes                :                     0                     0 bps
  Transmitted:
    Packets              :                     0                      0 pps
    Bytes                :                     0                     0 bps
    Tail-dropped packets : Not Available
    RED-dropped packets  :                     0                     0 pps
    RED-dropped bytes    :                     0                     0 bps
Queue: 3, Forwarding classes: ef1
  Queued:
    Packets              :                     0                     0 pps
    Bytes                :                     0                     0 bps
  Transmitted:
    Packets              :                     0                      0 pps
    Bytes                :                     0                     0 bps
    Tail-dropped packets : Not Available
    RED-dropped packets  :                     0                     0 pps
    RED-dropped bytes    :                     0                     0 bps
Forwarding classes: 16 supported, 5 in use
Egress queues: 4 supported, 5 in use
Queue: 0, Forwarding classes: af3
  Queued:
    Packets              :                     0                     0 pps
    Bytes                :                     0                     0 bps
```


Copyright © 2018, Juniper Networks, Inc.

```
  Transmitted:
    Packets              :                    0                     0 pps
    Bytes                :                    0                     0 bps
    Tail-dropped packets : Not Available
    RL-dropped packets   :                    0                     0 pps
    RL-dropped bytes     :                    0                     0 bps
    RED-dropped packets  :                    0                     0 pps
    RED-dropped bytes    :                    0                     0 bps
Queue: 1, Forwarding classes: af2
  Queued:
    Packets              :                    0                     0 pps
    Bytes                :                    0                     0 bps
  Transmitted:
    Packets              :                    0                     0 pps
    Bytes                :                    0                     0 bps
    Tail-dropped packets : Not Available
    RL-dropped packets   :                    0                     0 pps
    RL-dropped bytes     :                    0                     0 bps
    RED-dropped packets  :                    0                     0 pps
    RED-dropped bytes    :                    0                     0 bps
Queue: 2, Forwarding classes: ef2
  Queued:
    Packets              :                    0                     0 pps
    Bytes                :                    0                     0 bps
  Transmitted:
    Packets              :                    0                     0 pps
    Bytes                :                    0                     0 bps
    Tail-dropped packets : Not Available
    RL-dropped packets   :                    0                     0 pps
    RL-dropped bytes     :                    0                     0 bps
    RED-dropped packets  :                    0                     0 pps
    RED-dropped bytes    :                    0                     0 bps
Queue: 3, Forwarding classes: ef1
  Queued:
    Packets              :                    0                     0 pps
    Bytes                :                    0                     0 bps
  Transmitted:
    Packets              :                    0                     0 pps
    Bytes                :                    0                     0 bps
    Tail-dropped packets : Not Available
    RL-dropped packets   :                    0                     0 pps
    RL-dropped bytes     :                    0                     0 bps
    RED-dropped packets  :                    0                     0 pps
    RED-dropped bytes    :                    0                     0 bps

Packet Forwarding Engine Chassis Queues:
Queues: 4 supported, 5 in use
Queue: 0, Forwarding classes: af3
  Queued:
    Packets              :                    0                     0 pps
    Bytes                :                    0                     0 bps
  Transmitted:
    Packets              :                    0                     0 pps
    Bytes                :                    0                     0 bps
    Tail-dropped packets :                    0                     0 pps
    RED-dropped packets  : Not Available
    RED-dropped bytes    : Not Available
Queue: 1, Forwarding classes: af2
  Queued:
    Packets              :                    0                     0 pps
```

```
    Bytes                :                     0                     0 bps
  Transmitted:
    Packets              :                     0                      0 pps
    Bytes                :                     0                     0 bps
    Tail-dropped packets :                     0                     0 pps
    RED-dropped packets  : Not Available
    RED-dropped bytes    : Not Available
Queue: 2, Forwarding classes: ef2
  Queued:
    Packets              :                     0                     0 pps
    Bytes                :                     0                     0 bps
  Transmitted:
    Packets              :                     0                      0 pps
    Bytes                :                     0                     0 bps
    Tail-dropped packets :                     0                     0 pps
    RED-dropped packets  : Not Available
    RED-dropped bytes    : Not Available
Queue: 3, Forwarding classes: ef1
  Queued:
    Packets              :                108546                     0 pps
    Bytes                :              12754752                   376 bps
  Transmitted:
    Packets              :                108546                      0 pps
    Bytes                :              12754752                   376 bps
    Tail-dropped packets :                     0                     0 pps
    RED-dropped packets  : Not Available
    RED-dropped bytes    : Not Available

Physical interface: ge-0/3/0, Index: 138
Maximum usable queues: 4, Queues in use: 5
  Shaping rate: 50000 bps

Scheduler map: interface-schedular-map, Index: 58414

  Scheduler: ef2, Forwarding class: ef2, Index: 39155
    Transmit rate: 39 percent, Rate Limit: none, Buffer size: 120 us, Buffer
Limit: none, Priority: high
    Excess Priority: unspecified
    Drop profiles:
      Loss priority   Protocol    Index    Name
      Low             any             1    < default-drop-profile>
      Medium low      any             1    < default-drop-profile>
      Medium high     any             1    < default-drop-profile>
      High            any             1    < default-drop-profile>
Drop profile: < default-drop-profile>, Type: discrete, Index: 1
  Fill level    Drop probability
        100                 100
Drop profile: < default-drop-profile>, Type: discrete, Index: 1
  Fill level    Drop probability
        100                 100
Drop profile: < default-drop-profile>, Type: discrete, Index: 1
  Fill level    Drop probability
        100                 100
Drop profile: < default-drop-profile>, Type: discrete, Index: 1
  Fill level    Drop probability
        100                 100
  Input shaping rate: 10000 bps
  Input scheduler map: schedular-map

Scheduler map: schedular-map, Index: 15103
```


Copyright © 2018, Juniper Networks, Inc.

```
  Scheduler: af3, Forwarding class: af3, Index: 35058
    Transmit rate: 30 percent, Rate Limit: none, Buffer size: 45 percent, Buffer
 Limit: none, Priority: low
    Excess Priority: unspecified
    Drop profiles:
      Loss priority   Protocol    Index    Name
      Low             any         40582    green
      Medium low      any             1    < default-drop-profile>
      Medium high     any             1    < default-drop-profile>
      High            any         18928    yellow
Drop profile: green, Type: discrete, Index: 40582
  Fill level    Drop probability
          50                   0
         100                 100
Drop profile: < default-drop-profile>, Type: discrete, Index: 1
  Fill level    Drop probability
         100                 100
Drop profile: < default-drop-profile>, Type: discrete, Index: 1
  Fill level    Drop probability
         100                 100
Drop profile: yellow, Type: discrete, Index: 18928
  Fill level    Drop probability
          50                   0
         100                 100
  Chassis scheduler map: < default-drop-profile>
Scheduler map: < default-drop-profile>, Index: 4

  Scheduler: < default-drop-profile>, Forwarding class: af3, Index: 25
    Transmit rate: 25 percent, Rate Limit: none, Buffer size: 25 percent, Buffer
 Limit: none, Priority: low
    Excess Priority: low
    Drop profiles:
      Loss priority   Protocol    Index    Name
      Low             any             1    < default-drop-profile>
      Medium low      any             1    < default-drop-profile>
      Medium high     any             1    < default-drop-profile>
      High            any             1    < default-drop-profile>
Drop profile: < default-drop-profile>, Type: discrete, Index: 1
  Fill level    Drop probability
         100                 100
Drop profile: < default-drop-profile>, Type: discrete, Index: 1
  Fill level    Drop probability
         100                 100
Drop profile: < default-drop-profile>, Type: discrete, Index: 1
  Fill level    Drop probability
         100                 100
Drop profile: < default-drop-profile>, Type: discrete, Index: 1
  Fill level    Drop probability
         100                 100

  Scheduler: < default-drop-profile>, Forwarding class: af2, Index: 25
    Transmit rate: 25 percent, Rate Limit: none, Buffer size: 25 percent, Buffer
 Limit: none, Priority: low
    Excess Priority: low
    Drop profiles:
      Loss priority   Protocol    Index    Name
      Low             any             1    < default-drop-profile>
      Medium low      any             1    < default-drop-profile>
      Medium high     any             1    < default-drop-profile>
```

```
      High            any             1    < default-drop-profile>
Drop profile: < default-drop-profile>, Type: discrete, Index: 1
  Fill level    Drop probability
         100                 100
Drop profile: < default-drop-profile>, Type: discrete, Index: 1
  Fill level    Drop probability
         100                 100
Drop profile: < default-drop-profile>, Type: discrete, Index: 1
  Fill level    Drop probability
         100                 100
Drop profile: < default-drop-profile>, Type: discrete, Index: 1
  Fill level    Drop probability
         100                 100

  Scheduler: < default-drop-profile>, Forwarding class: ef2, Index: 25
    Transmit rate: 25 percent, Rate Limit: none, Buffer size: 25 percent, Buffer
 Limit: none, Priority: low
    Excess Priority: low
    Drop profiles:
      Loss priority   Protocol    Index    Name
      Low             any             1    < default-drop-profile>
      Medium low      any             1    < default-drop-profile>
      Medium high     any             1    < default-drop-profile>
      High            any             1    < default-drop-profile>
Drop profile: < default-drop-profile>, Type: discrete, Index: 1
  Fill level    Drop probability
         100                 100
Drop profile: < default-drop-profile>, Type: discrete, Index: 1
  Fill level    Drop probability
         100                 100
Drop profile: < default-drop-profile>, Type: discrete, Index: 1
  Fill level    Drop probability
         100                 100
Drop profile: < default-drop-profile>, Type: discrete, Index: 1
  Fill level    Drop probability
         100                 100

  Scheduler: < default-drop-profile>, Forwarding class: ef1, Index: 25
    Transmit rate: 25 percent, Rate Limit: none, Buffer size: 25 percent, Buffer
 Limit: none, Priority: low
    Excess Priority: low
    Drop profiles:
      Loss priority   Protocol    Index    Name
      Low             any             1    < default-drop-profile>
      Medium low      any             1    < default-drop-profile>
      Medium high     any             1    < default-drop-profile>
      High            any             1    < default-drop-profile>
Drop profile: , Type: discrete, Index: 1
  Fill level    Drop probability
         100                 100
Drop profile: < default-drop-profile>, Type: discrete, Index: 1
  Fill level    Drop probability
         100                 100
Drop profile: < default-drop-profile>, Type: discrete, Index: 1
  Fill level    Drop probability
         100                 100
Drop profile: < default-drop-profile>, Type: discrete, Index: 1
  Fill level    Drop probability
         100                 100
  Congestion-notification: Disabled
```


Copyright © 2018, Juniper Networks, Inc.

```
Forwarding class                       ID      Queue  Restricted queue  Fabric
priority  Policing priority
  af3                                   0       0          0             low
            normal
  af2                                   1       1          1             low
            normal
  ef2                                   2       2          2             high
            normal
  ef1                                   3       3          3             high
            normal
  af1                                   4       4          0             low
            normal

  Logical interface ge-0/3/0.0 (Index 68) (SNMP ifIndex 152) (Generation 159)
    Flags: SNMP-Traps 0x4000 VLAN-Tag [ 0x8100.1 ]  Encapsulation: ENET2
    Traffic statistics:
     Input  bytes  :                    0
     Output bytes  :                    0
     Input  packets:                    0
     Output packets:                    0
    Local statistics:
     Input  bytes  :                    0
     Output bytes  :                    0
     Input  packets:                    0
     Output packets:                    0
    Transit statistics:
     Input  bytes  :                    0                    0 bps
     Output bytes  :                    0                    0 bps
     Input  packets:                    0                    0 pps
     Output packets:                    0                    0 pps
    Protocol inet, MTU: 1500, Generation: 172, Route table: 0
      Flags: Sendbcast-pkt-to-re
      Input Filters: filter-in-ge-0/3/0.0-i,
      Policer: Input: p1-ge-0/3/0.0-inet-i
    Protocol mpls, MTU: 1488, Maximum labels: 3, Generation: 173, Route table: 0

      Flags: Is-Primary
      Output Filters: exp-filter,,,,,

Logical interface ge-1/2/0.0 (Index 347) (SNMP ifIndex 638) (Generation 156)

Forwarding class ID  Queue  Restricted queue  Fabric priority  Policing priority
   SPU priority
best-effort      0   0      0                 low              normal
    low

Aggregate Forwarding-class statistics per forwarding-class
  Aggregate Forwarding-class statistics:
   Forwarding-class statistics:

Forwarding-class best-effort statistics:
    Input unicast bytes:      0
    Output unicast bytes:     0
    Input unicast packets:    0
    Output unicast packets:   0

    Input multicast bytes:    0
    Output multicast bytes:   0
    Input multicast packets:  0
    Output multicast packets: 0
```

```
Forwarding-class expedited-forwarding statistics:
    Input unicast bytes:      0
    Output unicast bytes:     0
    Input unicast packets:    0
    Output unicast packets:   0

    Input multicast bytes:    0
    Output multicast bytes:   0
    Input multicast packets:  0
    Output multicast packets: 0

IPv4 protocol forwarding-class statistics:
  Forwarding-class statistics:
  Forwarding-class best-effort statistics:

    Input unicast bytes:      0
    Output unicast bytes:     0
    Input unicast packets:    0
    Output unicast packets:   0

    Input multicast bytes:    0
    Output multicast bytes:   0
    Input multicast packets:  0
    Output multicast packets: 0

Forwarding-class expedited-forwarding statistics:
    Input unicast bytes:      0
    Output unicast bytes:     0
    Input unicast packets:    0
    Output unicast packets:   0

    Input multicast bytes:    0
    Output multicast bytes:   0
    Input multicast packets:  0
    Output multicast packets: 0

    IPv6  protocol forwarding-class statistics:
    Forwarding-class statistics:
     Forwarding-class best-effort statistics:

    Input unicast bytes:      0
    Output unicast bytes:     0
    Input unicast packets:    0
    Output unicast packets:   0

    Input multicast bytes:    0
    Output multicast bytes:   0
    Input multicast packets:  0
    Output multicast packets: 0

Forwarding-class expedited-forwarding statistics:
    Input unicast bytes:      0
    Output unicast bytes:     0
    Input unicast packets:    0
    Output unicast packets:   0

    Input multicast bytes:    0
    Output multicast bytes:   0
    Input multicast packets:  0
```


Copyright © 2018, Juniper Networks, Inc.

```
    Output multicast packets: 0

Logical interface ge-0/3/0.0 (Index 68) (SNMP ifIndex 152)
    Flags: SNMP-Traps 0x4000 VLAN-Tag [ 0x8100.1 ]  Encapsulation: ENET2
    Input packets : 0
    Output packets: 0

Interface       Admin Link Proto Input Filter         Output Filter
ge-0/3/0.0      up    up   inet  filter-in-ge-0/3/0.0-i
                           mpls                       exp-filter
Interface       Admin Link Proto Input Policer         Output Policer
ge-0/3/0.0      up    up
                           inet  p1-ge-0/3/0.0-inet-i
                           mpls

Filter: filter-in-ge-0/3/0.0-i
Counters:
Name                                                  Bytes              Packets
count-filter-in-ge-0/3/0.0-i                              0                    0

Filter: exp-filter
Counters:
Name                                                  Bytes              Packets
count-exp-seven-match                                     0                    0
count-exp-zero-match                                      0                    0
Policers:
Name                                                Packets
p1-ge-0/3/0.0-inet-i                                      0


  Logical interface: ge-0/3/0.0, Index: 68
    Object                 Name                   Type                    Index

    Rewrite                exp-default            exp (mpls-any)            33

Rewrite rule: exp-default, Code point type: exp, Index: 33
  Forwarding class                    Loss priority       Code point
  af3                                 low                 000
  af3                                 high                001
  af2                                 low                 010
  af2                                 high                011
  ef2                                 low                 100
  ef2                                 high                101
  ef1                                 low                 110
  ef1                                 high                111
    Object                 Name                   Type                    Index

    Classifier             exp-default            exp                       10

Classifier: exp-default, Code point type: exp, Index: 10
  Code point         Forwarding class                    Loss priority
  000                af3                                 low
  001                af3                                 high
  010                af2                                 low
  011                af2                                 high
  100                ef2                                 low
  101                ef2                                 high
  110                ef1                                 low
  111                ef1                                 high
    Object                 Name                   Type                    Index
```

```
    Classifier             ipprec-compatibility   ip                        13

Classifier: ipprec-compatibility, Code point type: inet-precedence, Index: 13
  Code point         Forwarding class                    Loss priority
  000                af3                                 low
  001                af3                                 high
  010                af3                                 low
  011                af3                                 high
  100                af3                                 low
  101                af3                                 high
  110                ef1                                 low
  111                ef1                                 high
Forwarding class                       ID      Queue  Restricted queue  Fabric
priority  Policing priority
  af3                                   0       0          0             low
            normal
  af2                                   1       1          1             low
            normal
  ef2                                   2       2          2             high
            normal
  ef1                                   3       3          3             high
            normal
  af1                                   4       4          0             low
            normal

  Logical interface ge-0/3/0.1 (Index 69) (SNMP ifIndex 154) (Generation 160)
    Flags: SNMP-Traps 0x4000 VLAN-Tag [ 0x8100.2 ]  Encapsulation: ENET2
    Traffic statistics:
     Input  bytes  :                    0
     Output bytes  :                    0
     Input  packets:                    0
     Output packets:                    0
    Local statistics:
     Input  bytes  :                    0
     Output bytes  :                    0
     Input  packets:                    0
     Output packets:                    0
    Transit statistics:
     Input  bytes  :                    0                    0 bps
     Output bytes  :                    0                    0 bps
     Input  packets:                    0                    0 pps
     Output packets:                    0                    0 pps
    Protocol inet, MTU: 1500, Generation: 174, Route table: 0
      Flags: Sendbcast-pkt-to-re

  Logical interface ge-0/3/0.1 (Index 69) (SNMP ifIndex 154)
    Flags: SNMP-Traps 0x4000 VLAN-Tag [ 0x8100.2 ]  Encapsulation: ENET2
    Input packets : 0
    Output packets: 0


Interface       Admin Link Proto Input Filter         Output Filter
ge-0/3/0.1      up    up   mpls
Interface       Admin Link Proto Input Policer         Output Policer
ge-0/3/0.1      up    up
                           mpls

  Logical interface: ge-0/3/0.1, Index: 69
    Object                  Name                   Type                    Index
```


Copyright © 2018, Juniper Networks, Inc.

```
    Classifier             ipprec-compatibility   ip                        13

Classifier: ipprec-compatibility, Code point type: inet-precedence, Index: 13
  Code point         Forwarding class                    Loss priority
  000                af3                                 low
  001                af3                                 high
  010                af3                                 low
  011                af3                                 high
  100                af3                                 low
  101                af3                                 high
  110                ef1                                 low
  111                ef1                                 high
Forwarding class                       ID      Queue  Restricted queue  Fabric
priority  Policing priority
  af3                                   0       0          0             low
            normal
  af2                                   1       1          1             low
            normal
  ef2                                   2       2          2             high
            normal
  ef1                                   3       3          3             high
            normal
  af1                                   4       4          0             low
            normal
```

show class-of-service interface (ACX Series Routers)

```
user@host-g11# show class-of-service interface
```

```
Physical interface: at-0/0/0, Index: 130
Maximum usable queues: 4, Queues in use: 4
  Scheduler map: <default>, Index: 2
  Congestion-notification: Disabled

  Logical interface: at-0/0/0.0, Index: 69

  Logical interface: at-0/0/0.32767, Index: 70

Physical interface: at-0/0/1, Index: 133
Maximum usable queues: 4, Queues in use: 4
  Scheduler map: <default>, Index: 2
  Congestion-notification: Disabled

  Logical interface: at-0/0/1.0, Index: 71

  Logical interface: at-0/0/1.32767, Index: 72

Physical interface: ge-0/1/0, Index: 146
Maximum usable queues: 8, Queues in use: 5
  Scheduler map: <default>, Index: 2
  Congestion-notification: Disabled
Object                 Name                  Type                   Index
Rewrite                dscp-default          dscp                      31
Classifier             d1                    dscp                   11331
Classifier             ci                    ieee8021p                583

  Logical interface: ge-0/1/0.0, Index: 73
```

```
Object                  Name                    Type                    Index
Rewrite                 custom-exp              exp (mpls-any)          46413

  Logical interface: ge-0/1/0.1, Index: 74

  Logical interface: ge-0/1/0.32767, Index: 75

Physical interface: ge-0/1/1, Index: 147
Maximum usable queues: 8, Queues in use: 5
  Scheduler map: <default>, Index: 2
  Congestion-notification: Disabled
Object                  Name                    Type                    Index
Classifier              ipprec-compatibility    ip                         13

  Logical interface: ge-0/1/1.0, Index: 76

Physical interface: ge-0/1/2, Index: 148
Maximum usable queues: 8, Queues in use: 5
  Scheduler map: <default>, Index: 2
  Congestion-notification: Disabled
Object                  Name                    Type                    Index
Rewrite                 ri                      ieee8021p (outer)       35392
Classifier              ci                      ieee8021p                 583

Physical interface: ge-0/1/3, Index: 149
Maximum usable queues: 8, Queues in use: 5
  Scheduler map: <default>, Index: 2
  Congestion-notification: Disabled
Object                  Name                    Type                    Index
Classifier              ipprec-compatibility    ip                         13

  Logical interface: ge-0/1/3.0, Index: 77
Object                  Name                    Type                    Index
Rewrite                 custom-exp2             exp (mpls-any)          53581

Physical interface: ge-0/1/4, Index: 150
Maximum usable queues: 8, Queues in use: 5
  Scheduler map: <default>, Index: 2
  Congestion-notification: Disabled
Object                  Name                    Type                    Index
Classifier              ipprec-compatibility    ip                         13

Physical interface: ge-0/1/5, Index: 151
Maximum usable queues: 8, Queues in use: 5
  Scheduler map: <default>, Index: 2
  Congestion-notification: Disabled
Object                  Name                    Type                    Index
Classifier              ipprec-compatibility    ip                         13

Physical interface: ge-0/1/6, Index: 152
Maximum usable queues: 8, Queues in use: 5
  Scheduler map: <default>, Index: 2
  Congestion-notification: Disabled
Object                  Name                    Type                    Index
Classifier              ipprec-compatibility    ip                         13

Physical interface: ge-0/1/7, Index: 153
Maximum usable queues: 8, Queues in use: 5
  Scheduler map: <default>, Index: 2
  Congestion-notification: Disabled
```


Copyright © 2018, Juniper Networks, Inc.

```
Object                  Name                    Type                    Index
Classifier              d1                      dscp                    11331

Physical interface: ge-0/2/0, Index: 154
Maximum usable queues: 8, Queues in use: 5
  Scheduler map: <default>, Index: 2
  Congestion-notification: Disabled
Object                  Name                    Type                    Index
Classifier              ipprec-compatibility    ip                         13

Physical interface: ge-0/2/1, Index: 155
Maximum usable queues: 8, Queues in use: 5
  Scheduler map: <default>, Index: 2
  Congestion-notification: Disabled
Object                  Name                    Type                    Index
Classifier              ipprec-compatibility    ip                         13

  Logical interface: ge-0/2/1.0, Index: 78

  Logical interface: ge-0/2/1.32767, Index: 79

Physical interface: xe-0/3/0, Index: 156
Maximum usable queues: 8, Queues in use: 5
  Scheduler map: <default>, Index: 2
  Congestion-notification: Disabled
Object                  Name                    Type                    Index
Classifier              ipprec-compatibility    ip                         13

  Logical interface: xe-0/3/0.0, Index: 80

Physical interface: xe-0/3/1, Index: 157
Maximum usable queues: 8, Queues in use: 5
  Scheduler map: <default>, Index: 2
  Congestion-notification: Disabled
Object                  Name                    Type                    Index
Classifier              ipprec-compatibility    ip                         13

  Logical interface: xe-0/3/1.0, Index: 81

[edit]
user@host-g11#
```

show class-of-service interface (PPPoE Subscriber Interface for Enhanced Subscriber Management)

user@host> **show class-of-service interface pp0.3221225474**

```
  Logical interface: pp0.3221225475, Index: 3221225475
Object                  Name                    Type                    Index
Traffic-control-profile TC_PROF_100_199_SERIES_UID1006 Output      4294967312
Scheduler-map           SMAP-1_UID1002          Output              4294967327
Rewrite-Output          ieee-rewrite            ieee8021p               60432
Rewrite-Output          rule1                   ip                      50463

    Adjusting application: PPPoE IA tags
      Adjustment type: absolute
      Configured shaping rate: 11000000
      Adjustment value: 5000000
      Adjustment target: node

    Adjusting application: ucac
```

```
    Adjustment type: delta
    Configured shaping rate: 5000000
    Adjustment value: 100000
    Adjustment target: node
```


Copyright © 2018, Juniper Networks, Inc.

show class-of-service multi-destination

Syntax

show class-of-service multi-destination

Release Information

Command introduced before Junos OS Release 7.4.
Command introduced in Junos OS Release 11.1 for the QFX Series.
Command introduced in Junos OS Release 14.1X53-D20 for the OCX Series.
Command introduced in Junos OS Release 17.1 for the EX4300 switch.

Description

For each class-of-service (CoS) multidestination classifier, display the classifier type.

Options

none—Display all multidestination classifiers.

Required Privilege Level

view

Related Documentation

- Defining CoS BA Classifiers (DSCP, DSCP IPv6, IEEE 802.1p) on page 69
- Example: Configuring Multidestination (Multicast, Broadcast, DLF) Classifiers on page 75
- Understanding CoS Classifiers on page 60
- *Understanding CoS Classifiers*
- Understanding Applying CoS Classifiers and Rewrite Rules to Interfaces on page 87
- *Understanding Applying CoS Classifiers and Rewrite Rules to Interfaces*

Output Fields

Table 166 on page 881 describes the output fields for the **show class-of-service multi-destination** command. Output fields are listed in the approximate order in which they appear.

Table 166: show class-of-service multi-destination Output Fields

Field Name	Field Description
Family ethernet	Family to which the classifier belongs.
Classifier Name	Name of the classifier.
Classifier Type	Type of the classifier: **dscp** or **ieee-802.1**.
Classifier Index	Internal index of the classifier.

Sample Output

show class-of-service multi-destination

user@switch> show class-of-service multi-destination

```
Family ethernet:
Classifier Name                Classifier Type               Classifier Index
  ba-mcast-classifier            ieee-802.1                    62376
```


Copyright © 2018, Juniper Networks, Inc.

show class-of-service rewrite-rule

Syntax

```
show class-of-service rewrite-rule
<name name>
<type type>
```

Release Information

Command introduced before Junos OS Release 7.4.

Description

Display the mapping of forwarding classes and loss priority to code point values.

Options

none—Display all rewrite rules.

name *name*—(Optional) Display the specified rewrite rule.

type *type*—(Optional) Display the rewrite rule of the specified type. The rewrite rule type can be one of the following:

- **dscp**—For IPv4 traffic.
- **dscp-ipv6**—For IPv6 traffic.
- **exp**—For MPLS traffic.
- **frame-relay-de**—(SRX Series only) For Frame Relay traffic.
- **ieee-802.1**—For Layer 2 traffic.
- **inet-precedence**—For IPv4 traffic.

Required Privilege Level

view

Related Documentation

- *Rewrite Rules Overview*

List of Sample Output

show class-of-service rewrite-rule type dscp on page 884

Output Fields

Table 167 on page 883 describes the output fields for the **show class-of-service rewrite-rule** command. Output fields are listed in the approximate order in which they appear.

Table 167: show class-of-service rewrite-rule Output Fields

Field Name	Field Description
Rewrite rule	Name of the rewrite rule.
Code point type	Type of rewrite rule: **dscp**, **dscp-ipv6**, **exp**, **frame-relay-de**, or **inet-precedence**.

Table 167: show class-of-service rewrite-rule Output Fields (continued)

Field Name	Field Description
Forwarding class	Classification of a packet affecting the forwarding, scheduling, and marking policies applied as the packet transits the router or switch.
Index	Internal index for this particular rewrite rule.
Loss priority	Loss priority for rewriting.
Code point	Code point value to rewrite.

Sample Output

show class-of-service rewrite-rule type dscp

user@host> **show class-of-service rewrite-rule type dscp**

```
Rewrite rule: dscp-default, Code point type: dscp
  Forwarding class                   Loss priority       Code point
  gold                               high                000000
  silver                             low                 110000
  silver                             high                111000
  bronze                             low                 001010
  bronze                             high                001100
  lead                               high                101110

Rewrite rule: abc-dscp-rewrite, Code point type: dscp, Index: 3245
Forwarding class                   Loss priority       Code point
  gold                               low                 000111
  gold                               high                001010
  silver                             low                 110000
  silver                             high                111000
  bronze                             high                001100
  lead                               low                 101110
  lead                               high                110111
```


Copyright © 2018, Juniper Networks, Inc.

CHAPTER 18

Operational Commands (Node Device Scheduling)

- Monitoring CoS Scheduler Maps on page 885
- show class-of-service drop-profile
- show class-of-service forwarding-table
- show class-of-service forwarding-table drop-profile
- show class-of-service forwarding-table scheduler-map
- show class-of-service interface
- show class-of-service scheduler-map
- show class-of-service traffic-control-profile
- show interfaces queue

Monitoring CoS Scheduler Maps

Purpose Use the monitoring functionality to display assignments of CoS forwarding classes to schedulers.

Action To monitor CoS scheduler maps in the CLI, enter the CLI command:

user@switch> **show class-of-service scheduler-map**

To monitor a specific scheduler map in the CLI, enter the CLI command:

user@switch> **show class-of-service scheduler-map *scheduler-map-name***

Meaning Table 168 on page 885 summarizes key output fields for CoS scheduler maps.

Table 168: Summary of Key CoS Scheduler Maps Output Fields

Field	Values
Scheduler map	Name of a scheduler map that maps forwarding classes to schedulers.

Table 168: Summary of Key CoS Scheduler Maps Output Fields (continued)

Field	Values
Index	Index of a specific object—scheduler maps, schedulers, or drop profiles.
Scheduler	Name of a scheduler that controls queue properties such as bandwidth and scheduling priority.
Forwarding class	Name(s) of the forwarding class(es) to which the scheduler is mapped.
Transmit rate	Guaranteed minimum bandwidth configured on the queue mapped to the scheduler. On strict-high priority queues on QFX10000 switches, defines the maximum amount of traffic on the queue that is treated as strict-high priority traffic.
Priority	Scheduling priority of traffic on a queue: • **strict-high** or **high**—Packets on a strict-high priority queue are transmitted first, before all other traffic, up to the configured maximum bandwidth (shaping rate). On QFX3500, QFX3600, EX4600, and OCX series switches, and on QFabric system, only one queue can be configured as **strict-high** or **high** priority. On QFX10000 switches, you can configure more than one strict-high priority queue. • **low**—Packets in this queue are transmitted after packets in the **strict-high** queue.
Drop Profiles	Name and index of a drop profile that is mapped to a specific loss priority and protocol pair. The drop profile determines the way best effort queues drop packets during periods of congestion.
Loss Priority	Packet loss priority mapped to the drop profile. You can configure different drop profiles for **low**, **medium-high**, and **high** loss priority traffic.
Protocol	Transport protocol of the drop profile for the particular priority.
Name	Name of the drop profile.

Copyright © 2018, Juniper Networks, Inc.

show class-of-service drop-profile

Syntax

```
show class-of-service drop-profile
<profile-name profile-name>
```

Release Information

Command introduced before Junos OS Release 7.4.
Command introduced in Junos OS Release 9.0 for EX Series switches.
Command introduced in Junos OS Release 11.1 for the QFX Series.
Command introduced in Junos OS Release 14.1X53-D20 for the OCX Series.

Description

Display data points for each class-of-service (CoS) random early detection (RED) drop profile.

Options

none—Display all drop profiles.

profile-name *profile-name*—(Optional) Display the specified profile only.

Required Privilege Level

view

List of Sample Output

show class-of-service drop-profile on page 888
show class-of-service drop-profile (EX4200 Switch) on page 888
show class-of-service drop-profile (EX8200 Switch) on page 888

Output Fields

Table 169 on page 887 describes the output fields for the **show class-of-service drop-profile** command. Output fields are listed in the approximate order in which they appear.

Table 169: show class-of-service drop-profile Output Fields

Field Name	Field Description
Drop profile	Name of a drop profile.
Type	Type of drop profile: • **discrete** (default) • **interpolated** (EX8200 switches, QFX Series switches, QFabric systems, EX4600 switches, OCX Series switches only)
Index	Internal index of this drop profile.
Fill Level	Percentage fullness of a queue.
Drop probability	Drop probability at this fill level.

Sample Output

show class-of-service drop-profile

user@host> **show class-of-service drop-profile**

```
Drop profile: <default-drop-profile>, Type: discrete, Index: 1
  Fill level    Drop probability
        100                 100
Drop profile: user-drop-profile, Type: interpolated, Index: 2989
  Fill level    Drop probability
          0                   0
          1                   1
          2                   2
          4                   4
          5                   5
          6                   6
          8                   8
         10                  10
         12                  15
         14                  20
         15                  23
       ... 64 entries total
         90                  96
         92                  96
         94                  97
         95                  98
         96                  98
         98                  99
         99                  99
        100                 100
```

show class-of-service drop-profile (EX4200 Switch)

user@switch> **show class-of-service drop-profile**

```
Drop profile: <default-drop-profile>, Type: discrete, Index: 1
  Fill level
        100
Drop profile: dp1, Type: discrete, Index: 40496
  Fill level
         10
```

show class-of-service drop-profile (EX8200 Switch)

user@switch> **show class-of-service drop-profile**

```
Drop profile: <default-drop-profile>, Type: discrete, Index: 1
  Fill level    Drop probability
        100                 100
Drop profile: dp1, Type: interpolated, Index: 40496
  Fill level    Drop probability
          0                   0
          1                  80
          2                  90
          4                  90
          5                  90
          6                  90
          8                  90
```


Copyright © 2018, Juniper Networks, Inc.

```
          10                    90
          12                    91
          14                    91
          15                    91
          16                    91
          18                    91
          20                    91
          22                    92
          24                    92
          25                    92
          26                    92
          28                    92
          30                    92
          32                    93
          34                    93
          35                    93
          36                    93
          38                    93
          40                    93
          42                    94
          44                    94
          45                    94
          46                    94
          48                    94
          49                    94
          51                    95
          52                    95
          54                    95
          55                    95
          56                    95
          58                    95
          60                    95
          62                    96
          64                    96
          65                    96
          66                    96
          68                    96
          70                    96
          72                    97
          74                    97
          75                    97
          76                    97
          78                    97
          80                    97
          82                    98
          84                    98
          85                    98
          86                    98
          88                    98
          90                    98
          92                    99
          94                    99
          95                    99
          96                    99
          98                    99
          99                    99
         100                   100
Drop profile: dp2, Type: discrete, Index: 40499
  Fill level    Drop probability
```

10	5
50	50

Copyright © 2018, Juniper Networks, Inc.

show class-of-service forwarding-table

List of Syntax

Syntax on page 891
Syntax (TX Matrix and TX Matrix Plus Router) on page 891

Syntax

```
show class-of-service forwarding-table
```

Syntax (TX Matrix and TX Matrix Plus Router)

```
show class-of-service forwarding-table
<lcc number> | <sfc number>
```

Release Information

Command introduced before Junos OS Release 7.4.
Command introduced in Junos OS Release 11.1 for the QFX Series.
Command introduced in Junos OS Release 14.1X53-D20 for the OCX Series.

Description

Display the entire class-of-service (CoS) configuration as it exists in the forwarding table. Executing this command is equivalent to executing all **show class-of-service forwarding-table** commands in succession.

Options

lcc *number*—(TX Matrix and TX Matrix Plus router only) (Optional) On a TX Matrix router, display the forwarding table configuration for a specific T640 router (or line-card chassis) configured in a routing matrix. On a TX Matrix Plus router, display the forwarding table configuration for a specific router (or line-card chassis) configured in the routing matrix.

Replace *number* with the following values depending on the LCC configuration:

- 0 through 3, when T640 routers are connected to a TX Matrix router in a routing matrix.
- 0 through 3, when T1600 routers are connected to a TX Matrix Plus router in a routing matrix.
- 0 through 7, when T1600 routers are connected to a TX Matrix Plus router with 3D SIBs in a routing matrix.
- 0, 2, 4, or 6, when T4000 routers are connected to a TX Matrix Plus router with 3D SIBs in a routing matrix.

sfc *number*—(TX Matrix Plus routers only) (Optional) Display the forwarding table configuration for the TX Matrix Plus router. Replace ***number*** with **0**.

Required Privilege Level

view

List of Sample Output

show class-of-service forwarding-table on page 892
show class-of-service forwarding-table lcc (TX Matrix Plus Router) on page 893

Output Fields See the output field descriptions for **show class-of-service forwarding-table** commands:

- show class-of-service forwarding-table classifier
- show class-of-service forwarding-table classifier mapping
- show class-of-service forwarding-table drop-profile
- *show class-of-service forwarding-table fabric scheduler-map*
- show class-of-service forwarding-table rewrite-rule
- show class-of-service forwarding-table rewrite-rule mapping
- show class-of-service forwarding-table scheduler-map

Sample Output

show class-of-service forwarding-table

user@host> **show class-of-service forwarding-table**

```
Classifier table index: 9, # entries: 8, Table type: EXP
Entry #   Code point   Forwarding-class #   PLP
   0          000        0                 0
   1          001        0                 1
   2          010        1                 0
   3          011        1                 1
   4          100        2                 0
   5          101        2                 1
   6          110        3                 0
   7          111        3                 1

                       Table Index/
Interface      Index      Q num      Table type
sp-0/0/0.1001     66         11      IPv4 precedence
sp-0/0/0.2001     67         11      IPv4 precedence
sp-0/0/0.16383    68         11      IPv4 precedence
fe-0/0/0.0        69         11      IPv4 precedence

Interface: sp-0/0/0 (Index: 129, Map index: 2, Map type: FINAL,
 Num of queues: 2):
  Entry 0 (Scheduler index: 16, Forwarding-class #: 0):
    Tx rate: 0 Kb (95%), Buffer size: 95 percent
Priority low
    PLP high: 1, PLP low: 1, PLP medium-high: 1, PLP medium-low: 1
  Entry 1 (Scheduler index: 18, Forwarding-class #: 3):
    Tx rate: 0 Kb (5%), Buffer size: 5 percent
Priority low
    PLP high: 1, PLP low: 1, PLP medium-high: 1, PLP medium-low: 1

Interface: fe-0/0/0 (Index: 137, Map index: 2, Map type: FINAL,
 Num of queues: 2):
  Entry 0 (Scheduler index: 16, Forwarding-class #: 0):
    Tx rate: 0 Kb (95%), Buffer size: 95 percent
Priority low
    PLP high: 1, PLP low: 1, PLP medium-high: 1, PLP medium-low: 1
  Entry 1 (Scheduler index: 18, Forwarding-class #: 3):
    Tx rate: 0 Kb (5%), Buffer size: 5 percent
Priority low
    PLP high: 1, PLP low: 1, PLP medium-high: 1, PLP medium-low: 1
```

 Copyright © 2018, Juniper Networks, Inc.

```
Interface: fe-0/0/1 (Index: 138, Map index: 2, Map type: FINAL,
 Num of queues: 2):
  Entry 0 (Scheduler index: 16, Forwarding-class #: 0):
    Tx rate: 0 Kb (95%), Buffer size: 95 percent
Priority low
    PLP high: 1, PLP low: 1, PLP medium-high: 1, PLP medium-low: 1
  Entry 1 (Scheduler index: 18, Forwarding-class #: 3):
    Tx rate: 0 Kb (5%), Buffer size: 5 percent
Priority low
    PLP high: 1, PLP low: 1, PLP medium-high: 1, PLP medium-low: 1

...

RED drop profile index: 1, # entries: 1
                              Drop
Entry      Fullness(%)   Probability(%)
    0              100              100
```

show class-of-service forwarding-table lcc (TX Matrix Plus Router)

```
user@host> show class-of-service forwarding-table lcc 0
```

```
lcc0-re0:
--------------------------------------------------------------------------

Classifier table index: 9, # entries: 64, Table type: IPv6 DSCP
Entry #   Code point   Forwarding-class #   PLP
   0        000000        0       0
   1        000001        0       0
   2        000010        0       0
   3        000011        0       0
   4        000100        0       0
   5        000101        0       0
   6        000110        0       0
   7        000111        0       0
   8        001000        0       0
   9        001001        0       0
  10        001010        0       0
  11        001011        0       0
  12        001100        0       0
  13        001101        0       0
  14        001110        0       0
  15        001111        0       0
  16        010000        0       0
  17        010001        0       0
  18        010010        0       0
  19        010011        0       0
  20        010100        0       0
  21        010101        0       0
  22        010110        0       0
  23        010111        0       0
  24        011000        0       0
  25        011001        0       0
  26        011010        0       0
  27        011011        0       0
  28        011100        0       0
  29        011101        0       0
  30        011110        0       0
  31        011111        0       0
  32        100000        0       0
```

```
  33          100001          0          0
  34          100010          0          0
  35          100011          0          0
  36          100100          0          0
  37          100101          0          0
  38          100110          0          0
  39          100111          0          0
  40          101000          0          0
  41          101001          0          0
  42          101010          0          0
  43          101011          0          0
  44          101100          0          0
  45          101101          0          0
  46          101110          0          0
...
```


Copyright © 2018, Juniper Networks, Inc.

show class-of-service forwarding-table drop-profile

Syntax

show class-of-service forwarding-table drop-profile

Release Information

Command introduced before Junos OS Release 7.4.
Command introduced in Junos OS Release 11.1 for the QFX Series.
Command introduced in Junos OS Release 14.1X53-D20 for the OCX Series.

Description

Display the data points of all random early detection (RED) drop profiles as they exist in the forwarding table.

Options

This command has no options.

Required Privilege Level

view

List of Sample Output

show class-of-service forwarding-table drop-profile on page 895

Output Fields

Table 170 on page 895 describes the output fields for the **show class-of-service forwarding-table drop-profile** command. Output fields are listed in the approximate order in which they appear.

Table 170: show class-of-service forwarding-table drop-profile Output Fields

Field Name	Field Description
RED drop profile index	Index of this drop profile.
# entries	Number of entries in a particular RED drop profile index.
Entry	Drop profile entry number.
Fullness(%)	Percentage fullness of a queue.
Drop probability(%)	Drop probability at this fill level.

Sample Output

show class-of-service forwarding-table drop-profile

```
user@host> show class-of-service forwarding-table drop-profile
RED drop profile index: 4, # entries: 1
                                Drop
Entry      Fullness(%)   Probability(%)
    0              100              100

RED drop profile index: 8742, # entries: 3
                                Drop
```

```
Entry      Fullness(%)   Probability(%)
    0               10               10
    1               20               20
    2               30               30

RED drop profile index: 24627, # entries: 64
                              Drop
Entry      Fullness(%)   Probability(%)
    0                0                0
    1                1                1
    2                2                2
    3                4                4
 ...
   61               98               99
   62               99               99
   63              100              100

RED drop profile index: 25393, # entries: 64
                              Drop
Entry      Fullness(%)   Probability(%)
    0                0                0
    1                1                1
    2                2                2
    3                4                4
 ...
   61               98               98
   62               99               99
   63              100              100
```


Copyright © 2018, Juniper Networks, Inc.

show class-of-service forwarding-table scheduler-map

Syntax

show class-of-service forwarding-table scheduler-map

Release Information

Command introduced before Junos OS Release 7.4.
Command introduced in Junos OS Release 11.1 for the QFX Series.
Command introduced in Junos OS Release 14.1X53-D20 for the OCX Series.

Description

For each physical interface, display the scheduler map information as it exists in the forwarding table.

Options

This command has no options.

Required Privilege Level

view

List of Sample Output

show class-of-service forwarding-table scheduler-map on page 898

Output Fields

Table 171 on page 897 describes the output fields for the **show class-of-service forwarding-table scheduler-map** command. Output fields are listed in the approximate order in which they appear.

Table 171: show class-of-service forwarding-table scheduler-map Output Fields

Field Name	Field Description
Interface	Name of the physical interface.
Index	Physical interface index.
Map index	Scheduler map index.
Num of queues	Number of queues defined in this scheduler map.
Entry	Number of this entry in the scheduler map.
Scheduler index	Scheduler policy index.
Forwarding-class #	Forwarding class number to which this entry is applied.
Tx rate	Configured transmit rate of the scheduler (in bps). The rate is a percentage of the total interface bandwidth, or the keyword **remainder**, which indicates that the scheduler receives the remaining bandwidth of the interface.
Max buffer delay	Amount of transmit delay (in milliseconds) or buffer size of the queue. This amount is a percentage of the total interface buffer allocation or the keyword **remainder**, which indicates that the buffer is sized according to what remains after other scheduler buffer allocations.

Copyright © 2018, Juniper Networks, Inc.

Table 171: show class-of-service forwarding-table scheduler-map Output Fields (continued)

Field Name	Field Description
Priority	• **high**—Queue priority is high. • **low**—Queue priority is low.
PLP high	Drop profile index for a high packet loss priority profile.
PLP low	Drop profile index for a low packet loss priority profile.
PLP medium-high	Drop profile index for a medium-high packet loss priority profile.
PLP medium-low	Drop profile index for a medium-low packet loss priority profile.
TCP PLP high	Drop profile index for a high TCP packet loss priority profile.
TCP PLP low	Drop profile index for a low TCP packet loss priority profile.
Policy is exact	If this line appears in the output, exact rate limiting is enabled. Otherwise, no rate limiting is enabled.

Sample Output

show class-of-service forwarding-table scheduler-map

```
user@host> show class-of-service forwarding-table scheduler-map
Interface: so-5/0/0 (Index: 9, Map index: 17638, Num of queues: 2):
  Entry 0 (Scheduler index: 6090, Forwarding-class #: 0):
    Tx rate: 0 Kb (30%), Max buffer delay: 39 bytes (0%)
    Priority low
    PLP high: 25393, PLP low: 24627, TCP PLP high: 25393, TCP PLP low:8742
    Policy is exact
  Entry 1 (Scheduler index: 38372, Forwarding-class #: 1):
    Traffic chunk: Max = 0 bytes, Min = 0 bytes
    Tx rate: 0 Kb (40%), Max buffer delay: 68 bytes (0%)
    Priority high
    PLP high: 25393, PLP low: 24627, TCP PLP high: 25393, TCP PLP low: 8742

Interface: at-6/1/0 (Index: 10, Map index: 17638, Num of queues: 2):
  Entry 0 (Scheduler index: 6090, Forwarding-class #: 0):
    Traffic chunk: Max = 0 bytes, Min = 0 bytes
    Tx rate: 0 Kb (30%), Max buffer delay: 39 bytes (0%)
    Priority high
    PLP high: 25393, PLP low: 24627, TCP PLP high: 25393, TCP PLP low: 8742
  Entry 1 (Scheduler index: 38372, Forwarding-class #: 1):
    Traffic chunk: Max = 0 bytes, Min = 0 bytes
    Tx rate: 0 Kb (40%), Max buffer delay: 68 bytes (0%)
    Priority low
    PLP high: 25393, PLP low: 24627, TCP PLP high: 25393, TCP PLP low: 8742
```


Copyright © 2018, Juniper Networks, Inc.

show class-of-service interface

Syntax

```
show class-of-service interface
<comprehensive | detail> <interface-name>
```

Release Information

Command introduced before Junos OS Release 7.4.
Command introduced in Junos OS Release 9.0 for EX Series switches.
Forwarding class map information added in Junos OS Release 9.4.
Command introduced in Junos OS Release 11.1 for the QFX Series.
Command introduced in Junos OS Release 12.1 for the PTX Series Packet Transport routers.
Command introduced in Junos OS Release 12.2 for the ACX Series Universal Metro routers.
Command introduced in Junos OS Release 14.1X53-D20 for the OCX Series.
Options **detail** and **comprehensive** introduced in Junos OS Release 11.4.
Command introduced in Junos OS Release 15.1R3 on MX Series routers for enhanced subscriber management.

Description

Display the logical and physical interface associations for the classifier, rewrite rules, and scheduler map objects.

NOTE: **On routing platforms with dual Routing Engines, running this command on the backup Routing Engine, with or without any of the available options, is not supported and produces the following error message:**

error: the class-of-service subsystem is not running

Options

none—Display CoS associations for all physical and logical interfaces.

comprehensive—(M Series, MX Series, and T Series routers) (Optional) Display comprehensive quality-of-service (QoS) information about all physical and logical interfaces.

detail—(M Series, MX Series, and T Series routers) (Optional) Display QoS and CoS information based on the interface.

If the **interface** *interface-name* is a physical interface, the output includes:

- Brief QoS information about the physical interface
- Brief QoS information about the logical interface
- CoS information about the physical interface
- Brief information about filters or policers of the logical interface
- Brief CoS information about the logical interface

If the **interface** *interface-name* is a logical interface, the output includes:

- Brief QoS information about the logical interface
- Information about filters or policers for the logical interface
- CoS information about the logical interface

interface-name—(Optional) Display class-of-service (CoS) associations for the specified interface.

none—Display CoS associations for all physical and logical interfaces.

NOTE: ACX5000 routers do not support classification on logical interfaces and therefore do not show CoS associations for logical interfaces with this command.

Required Privilege Level view

Related Documentation

- *Verifying and Managing Junos OS Enhanced Subscriber Management*

List of Sample Output

show class-of-service interface (Physical) on page 912
show class-of-service interface (Logical) on page 912
show class-of-service interface (Gigabit Ethernet) on page 913
show class-of-service interface (ANCP) on page 913
show class-of-service interface (PPPoE Interface) on page 913
show class-of-service interface (DHCP Interface) on page 913
show class-of-service interface (T4000 Routers with Type 5 FPCs) on page 914
show class-of-service interface detail on page 914
show class-of-service interface comprehensive on page 915
show class-of-service interface (ACX Series Routers) on page 926
show class-of-service interface (PPPoE Subscriber Interface for Enhanced Subscriber Management) on page 928

Output Fields Table 148 on page 771 describes the output fields for the **show class-of-service interface** command. Output fields are listed in the approximate order in which they appear.

Table 172: show class-of-service interface Output Fields

Field Name	Field Description
Physical interface	Name of a physical interface.
Index	Index of this interface or the internal index of this object. (Enhanced subscriber management for MX Series routers) Index values for dynamic CoS traffic control profiles and dynamic scheduler maps are larger for enhanced subscriber management than they are for legacy subscriber management.

 Copyright © 2018, Juniper Networks, Inc.

Table 172: show class-of-service interface Output Fields (continued)

Field Name	Field Description
Dedicated Queues	Status of dedicated queues configured on an interface. Supported only on Trio MPC/MIC interfaces on MX Series routers. (Enhanced subscriber management for MX-Series routers) This field is not displayed for enhanced subscriber management.
Maximum usable queues	Number of queues you can configure on the interface.
Maximum usable queues	Maximum number of queues you can use.
Total non-default queues created	Number of queues created in addition to the default queues. Supported only on Trio MPC/MIC interfaces on MX Series routers. (Enhanced subscriber management for MX Series routers) This field is not displayed for enhanced subscriber management.
Rewrite Input IEEE Code-point	(QFX3500 switches only) IEEE 802.1p code point (priority) rewrite value. Incoming traffic from the Fibre Channel (FC) SAN is classified into the forwarding class specified in the native FC interface (NP_Port) fixed classifier and uses the priority specified as the IEEE 802.1p rewrite value.
Shaping rate	Maximum transmission rate on the physical interface. You can configure the shaping rate on the physical interface, or on the logical interface, but not on both. Therefore, the **Shaping rate** field is displayed for either the physical interface or the logical interface.
Scheduler map	Name of the output scheduler map associated with this interface. (Enhanced subscriber management for MX Series routers) The name of the dynamic scheduler map object is associated with a generated UID (for example, **SMAP-1_UID1002**) instead of with a subscriber interface.
Scheduler map forwarding class sets	(QFX Series only) Name of the output fabric scheduler map associated with a QFabric system Interconnect device interface.
Input shaping rate	For Gigabit Ethernet IQ2 PICs, maximum transmission rate on the input interface.
Input scheduler map	For Gigabit Ethernet IQ2 PICs, name of the input scheduler map associated with this interface.
Chassis scheduler map	Name of the scheduler map associated with the packet forwarding component queues.
Rewrite	Name and type of the rewrite rules associated with this interface.
Traffic-control-profile	Name of the associated traffic control profile. (Enhanced subscriber management for MX Series routers) The name of the dynamic traffic control profile object is associated with a generated UID (for example, **TC_PROF_100_199_SERIES_UID1006**) instead of with a subscriber interface.
Classifier	Name and type of classifiers associated with this interface.

Table 172: show class-of-service interface Output Fields (continued)

Field Name	Field Description
Forwarding-class-map	Name of the forwarding map associated with this interface.
Congestion-notification	(QFX Series and EX4600 switches only) Congestion notification state, **enabled** or **disabled**.
Logical interface	Name of a logical interface.
Object	Category of an object: **Classifier**, **Fragmentation-map** (for LSQ interfaces only), **Scheduler-map**, **Rewrite**, **Translation Table** (for IQE PICs only), or **traffic-class-map** (for T4000 routers with Type 5 FPCs).
Name	Name of an object.
Type	Type of an object: **dscp**, **dscp-ipv6**, **exp**, **ieee-802.1**, **ip**, **inet-precedence**, or **ieee-802.1ad** (for traffic class map on T4000 routers with Type 5 FPCs)..
Link-level type	Encapsulation on the physical interface.
MTU	MTU size on the physical interface.
Speed	Speed at which the interface is running.
Loopback	Whether loopback is enabled and the type of loopback.
Source filtering	Whether source filtering is enabled or disabled.
Flow control	Whether flow control is enabled or disabled.
Auto-negotiation	(Gigabit Ethernet interfaces) Whether autonegotiation is enabled or disabled.
Remote-fault	(Gigabit Ethernet interfaces) Remote fault status. • **Online**—Autonegotiation is manually configured as online. • **Offline**—Autonegotiation is manually configured as offline.

Copyright © 2018, Juniper Networks, Inc.

Table 172: show class-of-service interface Output Fields (continued)

Field Name	Field Description
Device flags	The **Device flags** field provides information about the physical device and displays one or more of the following values: • **Down**—Device has been administratively disabled. • **Hear-Own-Xmit**—Device receives its own transmissions. • **Link-Layer-Down**—The link-layer protocol has failed to connect with the remote endpoint. • **Loopback**—Device is in physical loopback. • **Loop-Detected**—The link layer has received frames that it sent, thereby detecting a physical loopback. • **No-Carrier**—On media that support carrier recognition, no carrier is currently detected. • **No-Multicast**—Device does not support multicast traffic. • **Present**—Device is physically present and recognized. • **Promiscuous**—Device is in promiscuous mode and recognizes frames addressed to all physical addresses on the media. • **Quench**—Transmission on the device is quenched because the output buffer is overflowing. • **Recv-All-Multicasts**—Device is in multicast promiscuous mode and therefore provides no multicast filtering. • **Running**—Device is active and enabled.

Interface flags	The **Interface flags** field provides information about the physical interface and displays one or more of the following values:
	• **Admin-Test**—Interface is in test mode and some sanity checking, such as loop detection, is disabled.
	• **Disabled**—Interface is administratively disabled.
	• **Down**—A hardware failure has occurred.
	• **Hardware-Down**—Interface is nonfunctional or incorrectly connected.
	• **Link-Layer-Down**—Interface keepalives have indicated that the link is incomplete.
	• **No-Multicast**—Interface does not support multicast traffic.
	• **No-receive No-transmit**—Passive monitor mode is configured on the interface.
	• **Point-To-Point**—Interface is point-to-point.
	• **Pop all MPLS labels from packets of depth**—MPLS labels are removed as packets arrive on an interface that has the **pop-all-labels** statement configured. The depth value can be one of the following:
	  ◦ **1**—Takes effect for incoming packets with one label only.
	  ◦ **2**—Takes effect for incoming packets with two labels only.
	  ◦ **[1 2]**—Takes effect for incoming packets with either one or two labels.
	• **Promiscuous**—Interface is in promiscuous mode and recognizes frames addressed to all physical addresses.
	• **Recv-All-Multicasts**—Interface is in multicast promiscuous mode and provides no multicast filtering.
	• **SNMP-Traps**—SNMP trap notifications are enabled.
	• **Up**—Interface is enabled and operational.

Table 172: show class-of-service interface Output Fields (continued)

Field Name	Field Description
Flags	The **Logical interface flags** field provides information about the logical interface and displays one or more of the following values: • **ACFC Encapsulation**—Address control field Compression (ACFC) encapsulation is enabled (negotiated successfully with a peer). • **Device-down**—Device has been administratively disabled. • **Disabled**—Interface is administratively disabled. • **Down**—A hardware failure has occurred. • **Clear-DF-Bit**—GRE tunnel or IPsec tunnel is configured to clear the Don't Fragment (DF) bit. • **Hardware-Down**—Interface protocol initialization failed to complete successfully. • **PFC**—Protocol field compression is enabled for the PPP session. • **Point-To-Point**—Interface is point-to-point. • **SNMP-Traps**—SNMP trap notifications are enabled. • **Up**—Interface is enabled and operational.
Encapsulation	Encapsulation on the logical interface.
Admin	Administrative state of the interface (**Up** or **Down**)
Link	Status of physical link (**Up** or **Down**).
Proto	Protocol configured on the interface.
Input Filter	Names of any firewall filters to be evaluated when packets are received on the interface, including any filters attached through activation of dynamic service.
Output Filter	Names of any firewall filters to be evaluated when packets are transmitted on the interface, including any filters attached through activation of dynamic service.
Link flags	Provides information about the physical link and displays one or more of the following values: • **ACFC**—Address control field compression is configured. The Point-to-Point Protocol (PPP) session negotiates the ACFC option. • **Give-Up**—Link protocol does not continue connection attempts after repeated failures. • **Loose-LCP**—PPP does not use the Link Control Protocol (LCP) to indicate whether the link protocol is operational. • **Loose-LMI**—Frame Relay does not use the Local Management Interface (LMI) to indicate whether the link protocol is operational. • **Loose-NCP**—PPP does not use the Network Control Protocol (NCP) to indicate whether the device is operational. • **Keepalives**—Link protocol keepalives are enabled. • **No-Keepalives**—Link protocol keepalives are disabled. • **PFC**—Protocol field compression is configured. The PPP session negotiates the PFC option.
Hold-times	Current interface hold-time up and hold-time down, in milliseconds.
CoS queues	Number of CoS queues configured.

Copyright © 2018, Juniper Networks, Inc.

Table 172: show class-of-service interface Output Fields (continued)

Field Name	Field Description
Last flapped	Date, time, and how long ago the interface went from down to up. The format is **Last flapped:** ***year-month-day hour:minute:second:timezone*** **(*hour:minute:second* ago)**. For example, **Last flapped: 2002-04-26 10:52:40 PDT (04:33:20 ago).**
Statistics last cleared	Number and rate of bytes and packets received and transmitted on the physical interface. • **Input bytes**—Number of bytes received on the interface. • **Output bytes**—Number of bytes transmitted on the interface. • **Input packets**—Number of packets received on the interface. • **Output packets**—Number of packets transmitted on the interface.
Exclude Overhead Bytes	Exclude the counting of overhead bytes from aggregate queue statistics. • **Disabled**—Default configuration. Includes the counting of overhead bytes in aggregate queue statistics. • **Enabled**—Excludes the counting of overhead bytes from aggregate queue statistics for just the physical interface. • **Enabled for hierarchy**—Excludes the counting of overhead bytes from aggregate queue statistics for the physical interface as well as all child interfaces, including logical interfaces and interface sets.
IPv6 transit statistics	Number of IPv6 transit bytes and packets received and transmitted on the logical interface if IPv6 statistics tracking is enabled.
Input errors	Input errors on the interface. The labels are explained in the following list: • **Errors**—Sum of the incoming frame aborts and FCS errors. • **Drops**—Number of packets dropped by the input queue of the I/O Manager ASIC. If the interface is saturated, this number increments once for every packet that is dropped by the ASIC's RED mechanism. • **Framing errors**—Number of packets received with an invalid frame checksum (FCS). • **Runts**—Number of frames received that are smaller than the runt threshold. • **Giants**—Number of frames received that are larger than the giant threshold. • **Bucket Drops**—Drops resulting from the traffic load exceeding the interface transmit or receive leaky bucket configuration. • **Policed discards**—Number of frames that the incoming packet match code discarded because they were not recognized or not of interest. Usually, this field reports protocols that Junos OS does not handle. • **L3 incompletes**—Number of incoming packets discarded because they failed Layer 3 (usually IPv4) sanity checks of the header. For example, a frame with less than 20 bytes of available IP header is discarded. Layer 3 incomplete errors can be ignored by configuring the **ignore-l3-incompletes** statement. • **L2 channel errors**—Number of times the software did not find a valid logical interface for an incoming frame. • **L2 mismatch timeouts**—Number of malformed or short packets that caused the incoming packet handler to discard the frame as unreadable. • **HS link CRC errors**—Number of errors on the high-speed links between the ASICs responsible for handling the router interfaces. • **HS link FIFO overflows**—Number of FIFO overflows on the high-speed links between the ASICs responsible for handling the router interfaces.

Copyright © 2018, Juniper Networks, Inc.

Table 172: show class-of-service interface Output Fields (continued)

Field Name	Field Description
Output errors	Output errors on the interface. The labels are explained in the following list: • **Carrier transitions**—Number of times the interface has gone from **down** to **up**. This number does not normally increment quickly, increasing only when the cable is unplugged, the far-end system is powered down and up, or another problem occurs. If the number of carrier transitions increments quickly (perhaps once every 10 seconds), the cable, the far-end system, or the PIC is malfunctioning. • **Errors**—Sum of the outgoing frame aborts and FCS errors. • **Drops**—Number of packets dropped by the output queue of the I/O Manager ASIC. If the interface is saturated, this number increments once for every packet that is dropped by the ASIC's RED mechanism. NOTE: Due to accounting space limitations on certain Type 3 FPCs (which are supported in M320 and T640 routers), the **Drops** field does not always use the correct value for queue 6 or queue 7 for interfaces on 10-port 1-Gigabit Ethernet PICs. • **Aged packets**—Number of packets that remained in shared packet SDRAM so long that the system automatically purged them. The value in this field should never increment. If it does, it is most likely a software bug or possibly malfunctioning hardware. • **HS link FIFO underflows**—Number of FIFO underflows on the high-speed links between the ASICs responsible for handling the router interfaces. • **MTU errors**—Number of packets whose size exceeds the MTU of the interface.
Egress queues	Total number of egress Maximum usable queues on the specified interface.
Queue counters	CoS queue number and its associated user-configured forwarding class name. • **Queued packets**—Number of queued packets. • **Transmitted packets**—Number of transmitted packets. • **Dropped packets**—Number of packets dropped by the ASIC's RED mechanism. NOTE: Due to accounting space limitations on certain Type 3 FPCs (which are supported in M320 and T640 routers), the **Dropped packets** field does not always display the correct value for queue 6 or queue 7 for interfaces on 10-port 1-Gigabit Ethernet PICs.
SONET alarms **SONET defects**	(SONET) SONET media-specific alarms and defects that prevent the interface from passing packets. When a defect persists for a certain period, it is promoted to an alarm. Based on the router configuration, an alarm can ring the red or yellow alarm bell on the router or light the red or yellow alarm LED on the craft interface. See these fields for possible alarms and defects: **SONET PHY**, **SONET section**, **SONET line**, and **SONET path**.
SONET PHY	Counts of specific SONET errors with detailed information. • **Seconds**—Number of seconds the defect has been active. • **Count**—Number of times that the defect has gone from inactive to active. • **State**—State of the error. A state other than **OK** indicates a problem. The **SONET PHY** field has the following subfields: • **PLL Lock**—Phase-locked loop • **PHY Light**—Loss of optical signal

Copyright © 2018, Juniper Networks, Inc.

Table 172: show class-of-service interface Output Fields (continued)

Field Name	Field Description
SONET section	Counts of specific SONET errors with detailed information. • **Seconds**—Number of seconds the defect has been active. • **Count**—Number of times that the defect has gone from inactive to active. • **State**—State of the error. A state other than **OK** indicates a problem. The **SONET section** field has the following subfields: • **BIP-B1**—Bit interleaved parity for SONET section overhead • **SEF**—Severely errored framing • **LOS**—Loss of signal • **LOF**—Loss of frame • **ES-S**—Errored seconds (section) • **SES-S**—Severely errored seconds (section) • **SEFS-S**—Severely errored framing seconds (section)
SONET line	Active alarms and defects, plus counts of specific SONET errors with detailed information. • **Seconds**—Number of seconds the defect has been active. • **Count**—Number of times that the defect has gone from inactive to active. • **State**—State of the error. A state other than **OK** indicates a problem. The **SONET line** field has the following subfields: • **BIP-B2**—Bit interleaved parity for SONET line overhead • **REI-L**—Remote error indication (near-end line) • **RDI-L**—Remote defect indication (near-end line) • **AIS-L**—Alarm indication signal (near-end line) • **BERR-SF**—Bit error rate fault (signal failure) • **BERR-SD**—Bit error rate defect (signal degradation) • **ES-L**—Errored seconds (near-end line) • **SES-L**—Severely errored seconds (near-end line) • **UAS-L**—Unavailable seconds (near-end line) • **ES-LFE**—Errored seconds (far-end line) • **SES-LFE**—Severely errored seconds (far-end line) • **UAS-LFE**—Unavailable seconds (far-end line)

Copyright © 2018, Juniper Networks, Inc.

Table 172: show class-of-service interface Output Fields (continued)

Field Name	Field Description
SONET path	Active alarms and defects, plus counts of specific SONET errors with detailed information. • **Seconds**—Number of seconds the defect has been active. • **Count**—Number of times that the defect has gone from inactive to active. • **State**—State of the error. A state other than **OK** indicates a problem. The **SONET path** field has the following subfields: • **BIP-B3**—Bit interleaved parity for SONET section overhead • **REI-P**—Remote error indication • **LOP-P**—Loss of pointer (path) • **AIS-P**—Path alarm indication signal • **RDI-P**—Path remote defect indication • **UNEQ-P**—Path unequipped • **PLM-P**—Path payload (signal) label mismatch • **ES-P**—Errored seconds (near-end STS path) • **SES-P**—Severely errored seconds (near-end STS path) • **UAS-P**—Unavailable seconds (near-end STS path) • **ES-PFE**—Errored seconds (far-end STS path) • **SES-PFE**—Severely errored seconds (far-end STS path) • **UAS-PFE**—Unavailable seconds (far-end STS path)
Received SONET overhead **Transmitted SONET overhead**	Values of the received and transmitted SONET overhead: • **C2**—Signal label. Allocated to identify the construction and content of the STS-level SPE and for PDI-P. • **F1**—Section user channel byte. This byte is set aside for the purposes of users. • **K1** and **K2**—These bytes are allocated for APS signaling for the protection of the multiplex section. • **J0**—Section trace. This byte is defined for STS-1 number 1 of an STS-*N* signal. Used to transmit a 1-byte fixed-length string or a 16-byte message so that a receiving terminal in a section can verify its continued connection to the intended transmitter. • **S1**—Synchronization status. The S1 byte is located in the first STS-1 number of an STS-*N* signal. • **Z3** and **Z4**—Allocated for future use.
Received path trace **Transmitted path trace**	SONET/SDH interfaces allow path trace bytes to be sent inband across the SONET/SDH link. Juniper Networks and other router manufacturers use these bytes to help diagnose misconfigurations and network errors by setting the transmitted path trace message so that it contains the system hostname and name of the physical interface. The received path trace value is the message received from the router at the other end of the fiber. The transmitted path trace value is the message that this router transmits.
HDLC configuration	Information about the HDLC configuration. • **Policing bucket**—Configured state of the receiving policer. • **Shaping bucket**—Configured state of the transmitting shaper. • **Giant threshold**—Giant threshold programmed into the hardware. • **Runt threshold**—Runt threshold programmed into the hardware.

Copyright © 2018, Juniper Networks, Inc.

Table 172: show class-of-service interface Output Fields (continued)

Field Name	Field Description
Packet Forwarding Engine configuration	Information about the configuration of the Packet Forwarding Engine: • **Destination slot**—FPC slot number. • **PLP byte**—Packet Level Protocol byte.
CoS information	Information about the CoS queue for the physical interface. • **CoS transmit queue**—Queue number and its associated user-configured forwarding class name. • **Bandwidth %**—Percentage of bandwidth allocated to the queue. • **Bandwidth bps**—Bandwidth allocated to the queue (in bps). • **Buffer %**—Percentage of buffer space allocated to the queue. • **Buffer usec**—Amount of buffer space allocated to the queue, in microseconds. This value is nonzero only if the buffer size is configured in terms of time. • **Priority**—Queue priority: **low** or **high**. • **Limit**—Displayed if rate limiting is configured for the queue. Possible values are **none** and **exact**. If **exact** is configured, the queue transmits only up to the configured bandwidth, even if excess bandwidth is available. If **none** is configured, the queue transmits beyond the configured bandwidth if bandwidth is available.
Forwarding classes	Total number of forwarding classes supported on the specified interface.
Egress queues	Total number of egress Maximum usable queues on the specified interface.
Queue	Queue number.
Forwarding classes	Forwarding class name.
Queued Packets	Number of packets queued to this queue.
Queued Bytes	Number of bytes queued to this queue. The byte counts vary by PIC type.
Transmitted Packets	Number of packets transmitted by this queue. When fragmentation occurs on the egress interface, the first set of packet counters shows the postfragmentation values. The second set of packet counters (displayed under the **Packet Forwarding Engine Chassis Queues** field) shows the prefragmentation values.
Transmitted Bytes	Number of bytes transmitted by this queue. The byte counts vary by PIC type.
Tail-dropped packets	Number of packets dropped because of tail drop.

Copyright © 2018, Juniper Networks, Inc.

Table 172: show class-of-service interface Output Fields (continued)

Field Name	Field Description

RED-dropped packets	Number of packets dropped because of random early detection (RED).
	• (M Series and T Series routers only) On M320 and M120 routers and the T Series routers, the total number of dropped packets is displayed. On all other M Series routers, the output classifies dropped packets into the following categories:
	  • **Low, non-TCP**—Number of low-loss priority non-TCP packets dropped because of RED.
	  • **Low, TCP**—Number of low-loss priority TCP packets dropped because of RED.
	  • **High, non-TCP**—Number of high-loss priority non-TCP packets dropped because of RED.
	  • **High, TCP**—Number of high-loss priority TCP packets dropped because of RED.
	• (MX Series routers with enhanced DPCs, and T Series routers with enhanced FPCs only) The output classifies dropped packets into the following categories:
	  • **Low**—Number of low-loss priority packets dropped because of RED.
	  • **Medium-low**—Number of medium-low loss priority packets dropped because of RED.
	  • **Medium-high**—Number of medium-high loss priority packets dropped because of RED.
	  • **High**—Number of high-loss priority packets dropped because of RED.
	NOTE: Due to accounting space limitations on certain Type 3 FPCs (which are supported in M320 and T640 routers), this field does not always display the correct value for queue 6 or queue 7 for interfaces on 10-port 1-Gigabit Ethernet PICs.

RED-dropped bytes	Number of bytes dropped because of RED. The byte counts vary by PIC type.
	• (M Series and T Series routers only) On M320 and M120 routers and the T Series routers, only the total number of dropped bytes is displayed. On all other M Series routers, the output classifies dropped bytes into the following categories:
	  • **Low, non-TCP**—Number of low-loss priority non-TCP bytes dropped because of RED.
	  • **Low, TCP**—Number of low-loss priority TCP bytes dropped because of RED.
	  • **High, non-TCP**—Number of high-loss priority non-TCP bytes dropped because of RED.
	  • **High, TCP**—Number of high-loss priority TCP bytes dropped because of RED.
	NOTE: Due to accounting space limitations on certain Type 3 FPCs (which are supported in M320 and T640 routers), this field does not always display the correct value for queue 6 or queue 7 for interfaces on 10-port 1-Gigabit Ethernet PICs.

Transmit rate	Configured transmit rate of the scheduler. The rate is a percentage of the total interface bandwidth.
Rate Limit	Rate limiting configuration of the queue. Possible values are : • **None**—No rate limit. • **exact**—Queue transmits at the configured rate.
Buffer size	Delay buffer size in the queue.
Priority	Scheduling priority configured as **low** or **high**.
Excess Priority	Priority of the excess bandwidth traffic on a scheduler: **low**, **medium-low**, **medium-high**, **high**, or **none**.

Copyright © 2018, Juniper Networks, Inc.

Table 172: show class-of-service interface Output Fields (continued)

Field Name	Field Description
Drop profiles	Display the assignment of drop profiles. • **Loss priority**—Packet loss priority for drop profile assignment. • **Protocol**—Transport protocol for drop profile assignment. • **Index**—Index of the indicated object. Objects that have indexes in this output include schedulers and drop profiles. • **Name**—Name of the drop profile. • **Type**—Type of the drop profile: **discrete** or **interpolated**. • **Fill Level**—Percentage fullness of a queue. • **Drop probability**—Drop probability at this fill level.
Excess Priority	Priority of the excess bandwidth traffic on a scheduler.
Drop profiles	Display the assignment of drop profiles. • **Loss priority**—Packet loss priority for drop profile assignment. • **Protocol**—Transport protocol for drop profile assignment. • **Index**—Index of the indicated object. Objects that have indexes in this output include schedulers and drop profiles. • **Name**—Name of the drop profile. • **Type**—Type of the drop profile: **discrete** or **interpolated**. • **Fill Level**—Percentage fullness of a queue. • **Drop probability**—Drop probability at this fill level.

Copyright © 2018, Juniper Networks, Inc.

Table 172: show class-of-service interface Output Fields (continued)

Field Name	Field Description

Adjustment information	Display the assignment of shaping-rate adjustments on a scheduler node or queue.
	• **Adjusting application**—Application that is performing the shaping-rate adjustment.
	  ◦ The adjusting application can appear as **ancp LS-0**, which is the Junos OS Access Node Control Profile process (**ancpd**) that performs shaping-rate adjustments on schedule nodes.
	  ◦ The adjusting application can appear as **DHCP**, which adjusts the shaping-rate and overhead-accounting class-of-service attributes based on DHCP option 82, suboption 9 (Vendor Specific Information). The shaping rate is based on the actual-data-rate-downstream attribute. The overhead accounting value is based on the access-loop-encapsulation attribute and specifies whether the access loop uses Ethernet (frame mode) or ATM (cell mode).
	  ◦ The adjusting application can also appear as **pppoe**, which adjusts the shaping-rate and overhead-accounting class-of-service attributes on dynamic subscriber interfaces in a broadband access network based on access line parameters in Point-to-Point Protocol over Ethernet (PPPoE) Tags [TR-101]. This feature is supported on MPC/MIC interfaces on MX Series routers. The shaping rate is based on the actual-data-rate-downstream attribute. The overhead accounting value is based on the access-loop-encapsulation attribute and specifies whether the access loop uses Ethernet (frame mode) or ATM (cell mode).
	• **Adjustment type**—Type of adjustment: **absolute** or **delta**.
	• **Configured shaping rate**—Shaping rate configured for the scheduler node or queue.
	• **Adjustment value**—Value of adjusted shaping rate.
	• **Adjustment target**—Level of shaping-rate adjustment performed: **node** or **queue**.
	• **Adjustment overhead-accounting mode**—Configured shaping mode: **frame** or **cell**.
	• **Adjustment overhead bytes**—Number of bytes that the ANCP agent adds to or subtracts from the actual downstream frame overhead before reporting the adjusted values to CoS.
	• **Adjustment target**—Level of shaping-rate adjustment performed: **node** or **queue**.
	• **Adjustment multicast index**—

Sample Output

show class-of-service interface (Physical)

```
user@host> show class-of-service interface so-0/2/3
```

```
Physical interface: so-0/2/3, Index: 135
Maximum usable queues: 8, Queues in use: 4
Total non-default queues created: 4
  Scheduler map: <default>, Index: 2032638653

  Logical interface: fe-0/0/1.0, Index: 68, Dedicated Queues: no
    Shaping rate: 32000
    Object                  Name                  Type           Index
    Scheduler-map           <default>                             27
    Rewrite                 exp-default           exp             21
    Classifier              exp-default           exp             5
    Classifier              ipprec-compatibility  ip              8
    Forwarding-class-map    exp-default           exp             5
```

show class-of-service interface (Logical)

```
user@host> show class-of-service interface so-0/2/3.0
```


Copyright © 2018, Juniper Networks, Inc.

```
Logical interface: so-0/2/3.0, Index: 68, Dedicated Queues: no
    Shaping rate: 32000
    Object                  Name                  Type            Index
    Scheduler-map           <default>                              27
    Rewrite                 exp-default           exp              21
    Classifier              exp-default           exp              5
    Classifier              ipprec-compatibility  ip               8
    Forwarding-class-map    exp-default           exp              5
```

show class-of-service interface (Gigabit Ethernet)

```
user@host> show class-of-service interface ge-6/2/0
```

```
Physical interface: ge-6/2/0, Index: 175
Maximum usable queues: 4, Queues in use: 4
  Scheduler map: <default>, Index: 2
  Input scheduler map: <default>, Index: 3
  Chassis scheduler map: <default-chassis>, Index: 4
```

show class-of-service interface (ANCP)

```
user@host> show class-of-service interface pp0.1073741842
```

```
  Logical interface: pp0.1073741842, Index: 341
Object                  Name                   Type                    Index
Traffic-control-profile TCP-CVLAN              Output                  12408
Classifier              dscp-ipv6-compatibility dscp-ipv6                  9
Classifier              ipprec-compatibility   ip                         13

    Adjusting application: ancp LS-0
      Adjustment type: absolute
      Configured shaping rate: 4000000
      Adjustment value: 11228000
      Adjustment overhead-accounting mode: Frame Mode
      Adjustment overhead bytes: 50
      Adjustment target: node
```

show class-of-service interface (PPPoE Interface)

```
user@host> show class-of-service interface pp0.1
```

```
Logical interface: pp0.1, Index: 85
    Object                  Name                   Type           Index
    Traffic-control-profile tcp-pppoe.o.pp0.1      Output         2726446535
    Classifier              ipprec-compatibility   ip             13

    Adjusting application: PPPoE
      Adjustment type: absolute
      Adjustment value: 5000000
      Adjustment overhead-accounting mode: cell
      Adjustment target: node
```

show class-of-service interface (DHCP Interface)

```
user@host> show class-of-service interface demux0.1
```

```
Logical interface: pp0.1, Index: 85
    Object                  Name                   Type           Index
    Traffic-control-profile tcp-dhcp.o.demux0.1    Output         2726446535
```

```
    Classifier              ipprec-compatibility   ip             13

    Adjusting application: DHCP
      Adjustment type: absolute
      Adjustment value: 5000000
      Adjustment overhead-accounting mode: cell
      Adjustment target: node
```

show class-of-service interface (T4000 Routers with Type 5 FPCs)

user@host> **show class-of-service interface xe-4/0/0**

```
Physical interface: xe-4/0/0, Index: 153
    Maximum usable queues: 8, Queues in use: 4
      Shaping rate: 5000000000 bps
      Scheduler map: <default>, Index: 2
      Congestion-notification: Disabled

      Logical interface: xe-4/0/0.0, Index: 77
        Object                  Name                   Type
Index
        Classifier              ipprec-compatibility   ip
  13
```

show class-of-service interface detail

user@host> **show class-of-service interface ge-0/3/0 detail**

```
Physical interface: ge-0/3/0, Enabled, Physical link is Up
  Link-level type: Ethernet, MTU: 1518, Speed: 1000mbps, Loopback: Disabled,
Source filtering: Disabled, Flow control: Enabled, Auto-negotiation: Enabled,
Remote fault: Online
  Device flags   : Present Running
  Interface flags: SNMP-Traps Internal: 0x4000

  Physical interface: ge-0/3/0, Index: 138
  Maximum usable queues: 4, Queues in use: 5
  Shaping rate: 50000 bps
  Scheduler map: interface-schedular-map, Index: 58414
  Input shaping rate: 10000 bps
  Input scheduler map: schedular-map, Index: 15103
  Chassis scheduler map: <default-chassis>, Index: 4
  Congestion-notification: Disabled

  Logical interface ge-0/3/0.0
    Flags: SNMP-Traps 0x4000 VLAN-Tag [ 0x8100.1 ]  Encapsulation: ENET2
    inet
    mpls
Interface       Admin Link Proto Input Filter         Output Filter
ge-0/3/0.0      up    up   inet
                           mpls
Interface       Admin Link Proto Input Policer         Output Policer
ge-0/3/0.0      up    up   inet
                           mpls

  Logical interface: ge-0/3/0.0, Index: 68
    Object                  Name                   Type               Index
    Rewrite                 exp-default            exp (mpls-any)       33
```


Copyright © 2018, Juniper Networks, Inc.

```
    Classifier              exp-default            exp                  10
    Classifier              ipprec-compatibility   ip                   13


  Logical interface ge-0/3/0.1
    Flags: SNMP-Traps 0x4000 VLAN-Tag [ 0x8100.2 ]  Encapsulation: ENET2
    inet
Interface       Admin Link Proto Input Filter         Output Filter
ge-0/3/0.1      up    up   inet
Interface       Admin Link Proto Input Policer         Output Policer
ge-0/3/0.1      up    up   inet

  Logical interface: ge-0/3/0.1, Index: 69
    Object                  Name                   Type            Index
    Classifier              ipprec-compatibility   ip               13
```

show class-of-service interface comprehensive

```
user@host> show class-of-service interface ge-0/3/0 comprehensive
```

```
Physical interface: ge-0/3/0, Enabled, Physical link is Up
  Interface index: 138, SNMP ifIndex: 601, Generation: 141
  Link-level type: Ethernet, MTU: 1518, Speed: 1000mbps, BPDU Error: None,
MAC-REWRITE Error: None, Loopback: Disabled, Source filtering: Disabled, Flow
control: Enabled,
  Auto-negotiation: Enabled, Remote fault: Online
  Device flags   : Present Running
  Interface flags: SNMP-Traps Internal: 0x4000
  CoS queues     : 4 supported, 4 maximum usable queues
  Schedulers     : 256
  Hold-times     : Up 0 ms, Down 0 ms
  Current address: 00:14:f6:f4:b4:5d, Hardware address: 00:14:f6:f4:b4:5d
  Last flapped   : 2010-09-07 06:35:22 PDT (15:14:42 ago)
  Statistics last cleared: Never  Exclude Overhead Bytes: Disabled
  Traffic statistics:
   Input  bytes  :                   0                    0 bps
   Output bytes  :                   0                    0 bps
   Input  packets:                   0                    0 pps
   Output packets:                   0                    0 pps
   IPv6 total statistics:
    Input  bytes  :                  0
    Output bytes  :                  0
    Input  packets:                  0
    Output packets:                  0
  Ingress traffic statistics at Packet Forwarding Engine:
   Input  bytes  :                   0                    0 bps
   Input  packets:                   0                    0 pps
   Drop   bytes  :                   0                    0 bps
   Drop   packets:                   0                    0 pps
  Label-switched interface (LSI) traffic statistics:
   Input  bytes  :                   0                    0 bps
   Input  packets:                   0                    0 pps
  Input errors:
    Errors: 0, Drops: 0, Framing errors: 0, Runts: 0, Policed discards: 0, L3
incompletes: 0, L2 channel errors: 0, L2 mismatch timeouts: 0, FIFO errors: 0,
Resource errors: 0
  Output errors:
    Carrier transitions: 5, Errors: 0, Drops: 0, Collisions: 0, Aged packets: 0,
 FIFO errors: 0, HS link CRC errors: 0, MTU errors: 0, Resource errors: 0
  Ingress queues: 4 supported, 5 in use
```

```
  Queue counters:       Queued packets  Transmitted packets      Dropped packets

    0 af3                           0                    0                    0

    1 af2                           0                    0                    0

    2 ef2                           0                    0                    0

    3 ef1                           0                    0                    0

  Egress queues: 4 supported, 5 in use
  Queue counters:       Queued packets  Transmitted packets      Dropped packets

    0 af3                           0                    0                    0

    1 af2                           0                    0                    0

    2 ef2                           0                    0                    0

    3 ef1                           0                    0                    0

  Active alarms  : None
  Active defects : None
  MAC statistics:                      Receive         Transmit
    Total octets                             0                0
    Total packets                            0                0
    Unicast packets                          0                0
    Broadcast packets                        0                0
    Multicast packets                        0                0
    CRC/Align errors                         0                0
    FIFO errors                              0                0
    MAC control frames                       0                0
    MAC pause frames                         0                0
    Oversized frames                         0
    Jabber frames                            0
    Fragment frames                          0
    VLAN tagged frames                       0
    Code violations                          0
  Filter statistics:
    Input packet count                       0
    Input packet rejects                     0
    Input DA rejects                         0
    Input SA rejects                         0
    Output packet count                                       0
    Output packet pad count                                   0
    Output packet error count                                 0
    CAM destination filters: 0, CAM source filters: 0
  Autonegotiation information:
    Negotiation status: Complete
    Link partner:
       Link mode: Full-duplex, Flow control: Symmetric/Asymmetric, Remote fault:
 OK
    Local resolution:
      Flow control: Symmetric, Remote fault: Link OK
  Packet Forwarding Engine configuration:
    Destination slot: 0
  CoS information:
    Direction : Output
    CoS transmit queue                Bandwidth                Buffer Priority
Limit
```


Copyright © 2018, Juniper Networks, Inc.

```
                              %            bps     %           usec
    2 ef2                    39          19500     0            120     high
none
    Direction : Input
    CoS transmit queue               Bandwidth               Buffer Priority
Limit
                              %            bps     %           usec
    0 af3                    30           3000    45              0      low
none

Physical interface: ge-0/3/0, Enabled, Physical link is Up
  Interface index: 138, SNMP ifIndex: 601
Forwarding classes: 16 supported, 5 in use
Ingress queues: 4 supported, 5 in use
Queue: 0, Forwarding classes: af3
  Queued:
    Packets              :                     0                     0 pps
    Bytes                :                     0                     0 bps
  Transmitted:
    Packets              :                     0                      0 pps
    Bytes                :                     0                     0 bps
    Tail-dropped packets : Not Available
    RED-dropped packets  :                     0                     0 pps
    RED-dropped bytes    :                     0                     0 bps
Queue: 1, Forwarding classes: af2
  Queued:
    Packets              :                     0                     0 pps
    Bytes                :                     0                     0 bps
  Transmitted:
    Packets              :                     0                      0 pps
    Bytes                :                     0                     0 bps
    Tail-dropped packets : Not Available
    RED-dropped packets  :                     0                     0 pps
    RED-dropped bytes    :                     0                     0 bps
Queue: 2, Forwarding classes: ef2
  Queued:
    Packets              :                     0                     0 pps
    Bytes                :                     0                     0 bps
  Transmitted:
    Packets              :                     0                      0 pps
    Bytes                :                     0                     0 bps
    Tail-dropped packets : Not Available
    RED-dropped packets  :                     0                     0 pps
    RED-dropped bytes    :                     0                     0 bps
Queue: 3, Forwarding classes: ef1
  Queued:
    Packets              :                     0                     0 pps
    Bytes                :                     0                     0 bps
  Transmitted:
    Packets              :                     0                      0 pps
    Bytes                :                     0                     0 bps
    Tail-dropped packets : Not Available
    RED-dropped packets  :                     0                     0 pps
    RED-dropped bytes    :                     0                     0 bps
Forwarding classes: 16 supported, 5 in use
Egress queues: 4 supported, 5 in use
Queue: 0, Forwarding classes: af3
  Queued:
    Packets              :                     0                     0 pps
    Bytes                :                     0                     0 bps
```

```
  Transmitted:
    Packets              :                    0                     0 pps
    Bytes                :                    0                     0 bps
    Tail-dropped packets : Not Available
    RL-dropped packets   :                    0                     0 pps
    RL-dropped bytes     :                    0                     0 bps
    RED-dropped packets  :                    0                     0 pps
    RED-dropped bytes    :                    0                     0 bps
Queue: 1, Forwarding classes: af2
  Queued:
    Packets              :                    0                     0 pps
    Bytes                :                    0                     0 bps
  Transmitted:
    Packets              :                    0                     0 pps
    Bytes                :                    0                     0 bps
    Tail-dropped packets : Not Available
    RL-dropped packets   :                    0                     0 pps
    RL-dropped bytes     :                    0                     0 bps
    RED-dropped packets  :                    0                     0 pps
    RED-dropped bytes    :                    0                     0 bps
Queue: 2, Forwarding classes: ef2
  Queued:
    Packets              :                    0                     0 pps
    Bytes                :                    0                     0 bps
  Transmitted:
    Packets              :                    0                     0 pps
    Bytes                :                    0                     0 bps
    Tail-dropped packets : Not Available
    RL-dropped packets   :                    0                     0 pps
    RL-dropped bytes     :                    0                     0 bps
    RED-dropped packets  :                    0                     0 pps
    RED-dropped bytes    :                    0                     0 bps
Queue: 3, Forwarding classes: ef1
  Queued:
    Packets              :                    0                     0 pps
    Bytes                :                    0                     0 bps
  Transmitted:
    Packets              :                    0                     0 pps
    Bytes                :                    0                     0 bps
    Tail-dropped packets : Not Available
    RL-dropped packets   :                    0                     0 pps
    RL-dropped bytes     :                    0                     0 bps
    RED-dropped packets  :                    0                     0 pps
    RED-dropped bytes    :                    0                     0 bps

Packet Forwarding Engine Chassis Queues:
Queues: 4 supported, 5 in use
Queue: 0, Forwarding classes: af3
  Queued:
    Packets              :                    0                     0 pps
    Bytes                :                    0                     0 bps
  Transmitted:
    Packets              :                    0                     0 pps
    Bytes                :                    0                     0 bps
    Tail-dropped packets :                    0                     0 pps
    RED-dropped packets  : Not Available
    RED-dropped bytes    : Not Available
Queue: 1, Forwarding classes: af2
  Queued:
    Packets              :                    0                     0 pps
```


Copyright © 2018, Juniper Networks, Inc.

```
    Bytes               :                    0                    0 bps
  Transmitted:
    Packets             :                    0                     0 pps
    Bytes               :                    0                    0 bps
    Tail-dropped packets :                   0                    0 pps
    RED-dropped packets  : Not Available
    RED-dropped bytes    : Not Available
Queue: 2, Forwarding classes: ef2
  Queued:
    Packets             :                    0                    0 pps
    Bytes               :                    0                    0 bps
  Transmitted:
    Packets             :                    0                     0 pps
    Bytes               :                    0                    0 bps
    Tail-dropped packets :                   0                    0 pps
    RED-dropped packets  : Not Available
    RED-dropped bytes    : Not Available
Queue: 3, Forwarding classes: ef1
  Queued:
    Packets             :               108546                    0 pps
    Bytes               :             12754752                  376 bps
  Transmitted:
    Packets             :               108546                     0 pps
    Bytes               :             12754752                  376 bps
    Tail-dropped packets :                   0                    0 pps
    RED-dropped packets  : Not Available
    RED-dropped bytes    : Not Available

Physical interface: ge-0/3/0, Index: 138
Maximum usable queues: 4, Queues in use: 5
  Shaping rate: 50000 bps

Scheduler map: interface-schedular-map, Index: 58414

  Scheduler: ef2, Forwarding class: ef2, Index: 39155
    Transmit rate: 39 percent, Rate Limit: none, Buffer size: 120 us, Buffer
Limit: none, Priority: high
    Excess Priority: unspecified
    Drop profiles:
      Loss priority   Protocol    Index    Name
      Low             any             1    < default-drop-profile>
      Medium low      any             1    < default-drop-profile>
      Medium high     any             1    < default-drop-profile>
      High            any             1    < default-drop-profile>
Drop profile: < default-drop-profile>, Type: discrete, Index: 1
  Fill level    Drop probability
        100                 100
Drop profile: < default-drop-profile>, Type: discrete, Index: 1
  Fill level    Drop probability
        100                 100
Drop profile: < default-drop-profile>, Type: discrete, Index: 1
  Fill level    Drop probability
        100                 100
Drop profile: < default-drop-profile>, Type: discrete, Index: 1
  Fill level    Drop probability
        100                 100
  Input shaping rate: 10000 bps
  Input scheduler map: schedular-map

Scheduler map: schedular-map, Index: 15103
```

```
  Scheduler: af3, Forwarding class: af3, Index: 35058
    Transmit rate: 30 percent, Rate Limit: none, Buffer size: 45 percent, Buffer
 Limit: none, Priority: low
    Excess Priority: unspecified
    Drop profiles:
      Loss priority   Protocol    Index    Name
      Low             any         40582    green
      Medium low      any             1    < default-drop-profile>
      Medium high     any             1    < default-drop-profile>
      High            any         18928    yellow
Drop profile: green, Type: discrete, Index: 40582
  Fill level    Drop probability
         50                   0
        100                 100
Drop profile: < default-drop-profile>, Type: discrete, Index: 1
  Fill level    Drop probability
        100                 100
Drop profile: < default-drop-profile>, Type: discrete, Index: 1
  Fill level    Drop probability
        100                 100
Drop profile: yellow, Type: discrete, Index: 18928
  Fill level    Drop probability
         50                   0
        100                 100
  Chassis scheduler map: < default-drop-profile>
Scheduler map: < default-drop-profile>, Index: 4

  Scheduler: < default-drop-profile>, Forwarding class: af3, Index: 25
    Transmit rate: 25 percent, Rate Limit: none, Buffer size: 25 percent, Buffer
 Limit: none, Priority: low
    Excess Priority: low
    Drop profiles:
      Loss priority   Protocol    Index    Name
      Low             any             1    < default-drop-profile>
      Medium low      any             1    < default-drop-profile>
      Medium high     any             1    < default-drop-profile>
      High            any             1    < default-drop-profile>
Drop profile: < default-drop-profile>, Type: discrete, Index: 1
  Fill level    Drop probability
        100                 100
Drop profile: < default-drop-profile>, Type: discrete, Index: 1
  Fill level    Drop probability
        100                 100
Drop profile: < default-drop-profile>, Type: discrete, Index: 1
  Fill level    Drop probability
        100                 100
Drop profile: < default-drop-profile>, Type: discrete, Index: 1
  Fill level    Drop probability
        100                 100

  Scheduler: < default-drop-profile>, Forwarding class: af2, Index: 25
    Transmit rate: 25 percent, Rate Limit: none, Buffer size: 25 percent, Buffer
 Limit: none, Priority: low
    Excess Priority: low
    Drop profiles:
      Loss priority   Protocol    Index    Name
      Low             any             1    < default-drop-profile>
      Medium low      any             1    < default-drop-profile>
      Medium high     any             1    < default-drop-profile>
```


Copyright © 2018, Juniper Networks, Inc.

```
      High            any             1    < default-drop-profile>
Drop profile: < default-drop-profile>, Type: discrete, Index: 1
  Fill level    Drop probability
         100                 100
Drop profile: < default-drop-profile>, Type: discrete, Index: 1
  Fill level    Drop probability
         100                 100
Drop profile: < default-drop-profile>, Type: discrete, Index: 1
  Fill level    Drop probability
         100                 100
Drop profile: < default-drop-profile>, Type: discrete, Index: 1
  Fill level    Drop probability
         100                 100

  Scheduler: < default-drop-profile>, Forwarding class: ef2, Index: 25
    Transmit rate: 25 percent, Rate Limit: none, Buffer size: 25 percent, Buffer
 Limit: none, Priority: low
    Excess Priority: low
    Drop profiles:
      Loss priority   Protocol    Index    Name
      Low             any             1    < default-drop-profile>
      Medium low      any             1    < default-drop-profile>
      Medium high     any             1    < default-drop-profile>
      High            any             1    < default-drop-profile>
Drop profile: < default-drop-profile>, Type: discrete, Index: 1
  Fill level    Drop probability
         100                 100
Drop profile: < default-drop-profile>, Type: discrete, Index: 1
  Fill level    Drop probability
         100                 100
Drop profile: < default-drop-profile>, Type: discrete, Index: 1
  Fill level    Drop probability
         100                 100
Drop profile: < default-drop-profile>, Type: discrete, Index: 1
  Fill level    Drop probability
         100                 100

  Scheduler: < default-drop-profile>, Forwarding class: ef1, Index: 25
    Transmit rate: 25 percent, Rate Limit: none, Buffer size: 25 percent, Buffer
 Limit: none, Priority: low
    Excess Priority: low
    Drop profiles:
      Loss priority   Protocol    Index    Name
      Low             any             1    < default-drop-profile>
      Medium low      any             1    < default-drop-profile>
      Medium high     any             1    < default-drop-profile>
      High            any             1    < default-drop-profile>
Drop profile: , Type: discrete, Index: 1
  Fill level    Drop probability
         100                 100
Drop profile: < default-drop-profile>, Type: discrete, Index: 1
  Fill level    Drop probability
         100                 100
Drop profile: < default-drop-profile>, Type: discrete, Index: 1
  Fill level    Drop probability
         100                 100
Drop profile: < default-drop-profile>, Type: discrete, Index: 1
  Fill level    Drop probability
         100                 100
  Congestion-notification: Disabled
```

```
Forwarding class                      ID      Queue  Restricted queue  Fabric
priority  Policing priority
  af3                                  0       0          0             low
            normal
  af2                                  1       1          1             low
            normal
  ef2                                  2       2          2             high
            normal
  ef1                                  3       3          3             high
            normal
  af1                                  4       4          0             low
            normal

  Logical interface ge-0/3/0.0 (Index 68) (SNMP ifIndex 152) (Generation 159)
    Flags: SNMP-Traps 0x4000 VLAN-Tag [ 0x8100.1 ]  Encapsulation: ENET2
    Traffic statistics:
     Input  bytes  :                   0
     Output bytes  :                   0
     Input  packets:                   0
     Output packets:                   0
    Local statistics:
     Input  bytes  :                   0
     Output bytes  :                   0
     Input  packets:                   0
     Output packets:                   0
    Transit statistics:
     Input  bytes  :                   0                    0 bps
     Output bytes  :                   0                    0 bps
     Input  packets:                   0                    0 pps
     Output packets:                   0                    0 pps
    Protocol inet, MTU: 1500, Generation: 172, Route table: 0
      Flags: Sendbcast-pkt-to-re
      Input Filters: filter-in-ge-0/3/0.0-i,
      Policer: Input: p1-ge-0/3/0.0-inet-i
    Protocol mpls, MTU: 1488, Maximum labels: 3, Generation: 173, Route table: 0

      Flags: Is-Primary
      Output Filters: exp-filter,,,,,

Logical interface ge-1/2/0.0 (Index 347) (SNMP ifIndex 638) (Generation 156)

Forwarding class ID  Queue  Restricted queue  Fabric priority  Policing priority
   SPU priority
best-effort      0   0      0                 low              normal
    low

Aggregate Forwarding-class statistics per forwarding-class
  Aggregate Forwarding-class statistics:
   Forwarding-class statistics:

Forwarding-class best-effort statistics:
    Input unicast bytes:      0
    Output unicast bytes:     0
    Input unicast packets:    0
    Output unicast packets:   0

    Input multicast bytes:    0
    Output multicast bytes:   0
    Input multicast packets:  0
    Output multicast packets: 0
```


Copyright © 2018, Juniper Networks, Inc.

```
Forwarding-class expedited-forwarding statistics:
    Input unicast bytes:      0
    Output unicast bytes:     0
    Input unicast packets:    0
    Output unicast packets:   0

    Input multicast bytes:    0
    Output multicast bytes:   0
    Input multicast packets:  0
    Output multicast packets: 0

IPv4 protocol forwarding-class statistics:
  Forwarding-class statistics:
  Forwarding-class best-effort statistics:

    Input unicast bytes:      0
    Output unicast bytes:     0
    Input unicast packets:    0
    Output unicast packets:   0

    Input multicast bytes:    0
    Output multicast bytes:   0
    Input multicast packets:  0
    Output multicast packets: 0

Forwarding-class expedited-forwarding statistics:
    Input unicast bytes:      0
    Output unicast bytes:     0
    Input unicast packets:    0
    Output unicast packets:   0

    Input multicast bytes:    0
    Output multicast bytes:   0
    Input multicast packets:  0
    Output multicast packets: 0

    IPv6  protocol forwarding-class statistics:
    Forwarding-class statistics:
     Forwarding-class best-effort statistics:

    Input unicast bytes:      0
    Output unicast bytes:     0
    Input unicast packets:    0
    Output unicast packets:   0

    Input multicast bytes:    0
    Output multicast bytes:   0
    Input multicast packets:  0
    Output multicast packets: 0

Forwarding-class expedited-forwarding statistics:
    Input unicast bytes:      0
    Output unicast bytes:     0
    Input unicast packets:    0
    Output unicast packets:   0

    Input multicast bytes:    0
    Output multicast bytes:   0
    Input multicast packets:  0
```

```
    Output multicast packets: 0

Logical interface ge-0/3/0.0 (Index 68) (SNMP ifIndex 152)
    Flags: SNMP-Traps 0x4000 VLAN-Tag [ 0x8100.1 ]  Encapsulation: ENET2
    Input packets : 0
    Output packets: 0

Interface       Admin Link Proto Input Filter         Output Filter
ge-0/3/0.0      up    up   inet  filter-in-ge-0/3/0.0-i
                           mpls                       exp-filter
Interface       Admin Link Proto Input Policer         Output Policer
ge-0/3/0.0      up    up
                           inet  p1-ge-0/3/0.0-inet-i
                           mpls

Filter: filter-in-ge-0/3/0.0-i
Counters:
Name                                                Bytes              Packets
count-filter-in-ge-0/3/0.0-i                            0                    0

Filter: exp-filter
Counters:
Name                                                Bytes              Packets
count-exp-seven-match                                   0                    0
count-exp-zero-match                                    0                    0
Policers:
Name                                               Packets
p1-ge-0/3/0.0-inet-i                                    0


  Logical interface: ge-0/3/0.0, Index: 68
    Object                 Name                   Type                    Index

    Rewrite                exp-default            exp (mpls-any)            33

Rewrite rule: exp-default, Code point type: exp, Index: 33
  Forwarding class                    Loss priority       Code point
  af3                                 low                 000
  af3                                 high                001
  af2                                 low                 010
  af2                                 high                011
  ef2                                 low                 100
  ef2                                 high                101
  ef1                                 low                 110
  ef1                                 high                111
    Object                 Name                   Type                    Index

    Classifier             exp-default            exp                       10

Classifier: exp-default, Code point type: exp, Index: 10
  Code point         Forwarding class                    Loss priority
  000                af3                                 low
  001                af3                                 high
  010                af2                                 low
  011                af2                                 high
  100                ef2                                 low
  101                ef2                                 high
  110                ef1                                 low
  111                ef1                                 high
    Object                 Name                   Type                    Index
```


Copyright © 2018, Juniper Networks, Inc.

```
    Classifier             ipprec-compatibility   ip                        13

Classifier: ipprec-compatibility, Code point type: inet-precedence, Index: 13
  Code point         Forwarding class                    Loss priority
  000                af3                                 low
  001                af3                                 high
  010                af3                                 low
  011                af3                                 high
  100                af3                                 low
  101                af3                                 high
  110                ef1                                 low
  111                ef1                                 high
Forwarding class                       ID      Queue  Restricted queue  Fabric
priority  Policing priority
  af3                                   0       0          0             low
            normal
  af2                                   1       1          1             low
            normal
  ef2                                   2       2          2             high
            normal
  ef1                                   3       3          3             high
            normal
  af1                                   4       4          0             low
            normal

  Logical interface ge-0/3/0.1 (Index 69) (SNMP ifIndex 154) (Generation 160)
    Flags: SNMP-Traps 0x4000 VLAN-Tag [ 0x8100.2 ]  Encapsulation: ENET2
    Traffic statistics:
     Input  bytes  :                    0
     Output bytes  :                    0
     Input  packets:                    0
     Output packets:                    0
    Local statistics:
     Input  bytes  :                    0
     Output bytes  :                    0
     Input  packets:                    0
     Output packets:                    0
    Transit statistics:
     Input  bytes  :                    0                    0 bps
     Output bytes  :                    0                    0 bps
     Input  packets:                    0                    0 pps
     Output packets:                    0                    0 pps
    Protocol inet, MTU: 1500, Generation: 174, Route table: 0
      Flags: Sendbcast-pkt-to-re

  Logical interface ge-0/3/0.1 (Index 69) (SNMP ifIndex 154)
    Flags: SNMP-Traps 0x4000 VLAN-Tag [ 0x8100.2 ]  Encapsulation: ENET2
    Input packets : 0
    Output packets: 0


Interface       Admin Link Proto Input Filter         Output Filter
ge-0/3/0.1      up    up   mpls
Interface       Admin Link Proto Input Policer         Output Policer
ge-0/3/0.1      up    up
                           mpls

  Logical interface: ge-0/3/0.1, Index: 69
    Object                  Name                   Type                    Index
```

```
    Classifier              ipprec-compatibility   ip                        13

Classifier: ipprec-compatibility, Code point type: inet-precedence, Index: 13
  Code point         Forwarding class                    Loss priority
  000                af3                                 low
  001                af3                                 high
  010                af3                                 low
  011                af3                                 high
  100                af3                                 low
  101                af3                                 high
  110                ef1                                 low
  111                ef1                                 high
Forwarding class                       ID      Queue  Restricted queue  Fabric
priority  Policing priority
  af3                                   0       0          0             low
            normal
  af2                                   1       1          1             low
            normal
  ef2                                   2       2          2             high
            normal
  ef1                                   3       3          3             high
            normal
  af1                                   4       4          0             low
            normal
```

show class-of-service interface (ACX Series Routers)

```
user@host-g11# show class-of-service interface
```

```
Physical interface: at-0/0/0, Index: 130
Maximum usable queues: 4, Queues in use: 4
  Scheduler map: <default>, Index: 2
  Congestion-notification: Disabled

  Logical interface: at-0/0/0.0, Index: 69

  Logical interface: at-0/0/0.32767, Index: 70

Physical interface: at-0/0/1, Index: 133
Maximum usable queues: 4, Queues in use: 4
  Scheduler map: <default>, Index: 2
  Congestion-notification: Disabled

  Logical interface: at-0/0/1.0, Index: 71

  Logical interface: at-0/0/1.32767, Index: 72

Physical interface: ge-0/1/0, Index: 146
Maximum usable queues: 8, Queues in use: 5
  Scheduler map: <default>, Index: 2
  Congestion-notification: Disabled
Object                  Name                  Type                    Index
Rewrite                 dscp-default          dscp                       31
Classifier              d1                    dscp                    11331
Classifier              ci                    ieee8021p                 583

  Logical interface: ge-0/1/0.0, Index: 73
```

 Copyright © 2018, Juniper Networks, Inc.

```
Object                  Name                    Type                    Index
Rewrite                 custom-exp              exp (mpls-any)          46413

  Logical interface: ge-0/1/0.1, Index: 74

  Logical interface: ge-0/1/0.32767, Index: 75

Physical interface: ge-0/1/1, Index: 147
Maximum usable queues: 8, Queues in use: 5
  Scheduler map: <default>, Index: 2
  Congestion-notification: Disabled
Object                  Name                    Type                    Index
Classifier              ipprec-compatibility    ip                         13

  Logical interface: ge-0/1/1.0, Index: 76

Physical interface: ge-0/1/2, Index: 148
Maximum usable queues: 8, Queues in use: 5
  Scheduler map: <default>, Index: 2
  Congestion-notification: Disabled
Object                  Name                    Type                    Index
Rewrite                 ri                      ieee8021p (outer)       35392
Classifier              ci                      ieee8021p                 583

Physical interface: ge-0/1/3, Index: 149
Maximum usable queues: 8, Queues in use: 5
  Scheduler map: <default>, Index: 2
  Congestion-notification: Disabled
Object                  Name                    Type                    Index
Classifier              ipprec-compatibility    ip                         13

  Logical interface: ge-0/1/3.0, Index: 77
Object                  Name                    Type                    Index
Rewrite                 custom-exp2             exp (mpls-any)          53581

Physical interface: ge-0/1/4, Index: 150
Maximum usable queues: 8, Queues in use: 5
  Scheduler map: <default>, Index: 2
  Congestion-notification: Disabled
Object                  Name                    Type                    Index
Classifier              ipprec-compatibility    ip                         13

Physical interface: ge-0/1/5, Index: 151
Maximum usable queues: 8, Queues in use: 5
  Scheduler map: <default>, Index: 2
  Congestion-notification: Disabled
Object                  Name                    Type                    Index
Classifier              ipprec-compatibility    ip                         13

Physical interface: ge-0/1/6, Index: 152
Maximum usable queues: 8, Queues in use: 5
  Scheduler map: <default>, Index: 2
  Congestion-notification: Disabled
Object                  Name                    Type                    Index
Classifier              ipprec-compatibility    ip                         13

Physical interface: ge-0/1/7, Index: 153
Maximum usable queues: 8, Queues in use: 5
  Scheduler map: <default>, Index: 2
  Congestion-notification: Disabled
```

```
Object                  Name                    Type                    Index
Classifier              d1                      dscp                    11331

Physical interface: ge-0/2/0, Index: 154
Maximum usable queues: 8, Queues in use: 5
  Scheduler map: <default>, Index: 2
  Congestion-notification: Disabled
Object                  Name                    Type                    Index
Classifier              ipprec-compatibility    ip                         13

Physical interface: ge-0/2/1, Index: 155
Maximum usable queues: 8, Queues in use: 5
  Scheduler map: <default>, Index: 2
  Congestion-notification: Disabled
Object                  Name                    Type                    Index
Classifier              ipprec-compatibility    ip                         13

  Logical interface: ge-0/2/1.0, Index: 78

  Logical interface: ge-0/2/1.32767, Index: 79

Physical interface: xe-0/3/0, Index: 156
Maximum usable queues: 8, Queues in use: 5
  Scheduler map: <default>, Index: 2
  Congestion-notification: Disabled
Object                  Name                    Type                    Index
Classifier              ipprec-compatibility    ip                         13

  Logical interface: xe-0/3/0.0, Index: 80

Physical interface: xe-0/3/1, Index: 157
Maximum usable queues: 8, Queues in use: 5
  Scheduler map: <default>, Index: 2
  Congestion-notification: Disabled
Object                  Name                    Type                    Index
Classifier              ipprec-compatibility    ip                         13

  Logical interface: xe-0/3/1.0, Index: 81

[edit]
user@host-g11#
```

show class-of-service interface (PPPoE Subscriber Interface for Enhanced Subscriber Management)

```
user@host> show class-of-service interface pp0.3221225474
```

```
  Logical interface: pp0.3221225475, Index: 3221225475
Object                  Name                    Type                    Index
Traffic-control-profile TC_PROF_100_199_SERIES_UID1006 Output      4294967312
Scheduler-map           SMAP-1_UID1002          Output              4294967327
Rewrite-Output          ieee-rewrite            ieee8021p               60432
Rewrite-Output          rule1                   ip                      50463

    Adjusting application: PPPoE IA tags
      Adjustment type: absolute
      Configured shaping rate: 11000000
      Adjustment value: 5000000
      Adjustment target: node

    Adjusting application: ucac
```


Copyright © 2018, Juniper Networks, Inc.

```
    Adjustment type: delta
    Configured shaping rate: 5000000
    Adjustment value: 100000
    Adjustment target: node
```

show class-of-service scheduler-map

Syntax

```
show class-of-service scheduler-map
<name>
```

Release Information

Command introduced before Junos OS Release 7.4.
Command introduced in Junos OS Release 11.1 for the QFX Series.
Command introduced in Junos OS Release 15.1R3 on MX Series routers for enhanced subscriber management.

Description

Display the mapping of schedulers to forwarding classes and a summary of scheduler parameters for each entry.

Options

none—Display all scheduler maps.

name—(Optional) Display a summary of scheduler parameters for each forwarding class to which the named scheduler is assigned.

Required Privilege Level

view

Related Documentation

- *Verifying and Managing Junos OS Enhanced Subscriber Management*

List of Sample Output

show class-of-service scheduler-map on page 931
show class-of-service scheduler-map (QFX Series) on page 932

Output Fields

Table 173 on page 930 describes the output fields for the **show class-of-service scheduler-map** command. Output fields are listed in the approximate order in which they appear.

Table 173: show class-of-service scheduler-map Output Fields

Field Name	Field Description
Scheduler map	Name of the scheduler map. (Enhanced subscriber management for MX Series routers) The name of the dynamic scheduler map object is associated with a generated UID (for example, **SMAP-1_UID1002**) instead of with a subscriber interface.
Index	Index of the indicated object. Objects having indexes in this output include scheduler maps, schedulers, and drop profiles. (Enhanced subscriber management for MX Series routers) Index values for dynamic CoS traffic control profiles are larger for enhanced subscriber management than they are for legacy subscriber management.
Scheduler	Name of the scheduler.

Copyright © 2018, Juniper Networks, Inc.

Table 173: show class-of-service scheduler-map Output Fields (continued)

Field Name	Field Description
Forwarding class	Classification of a packet affecting the forwarding, scheduling, and marking policies applied as the packet transits the router.
Transmit rate	Configured transmit rate of the scheduler (in bps). The rate is a percentage of the total interface bandwidth, or the keyword **remainder**, which indicates that the scheduler receives the remaining bandwidth of the interface.
Rate Limit	Rate limiting configuration of the queue. Possible values are **none**, meaning no rate limiting, and **exact**, meaning the queue only transmits at the configured rate.
Maximum buffer delay	Amount of transmit delay (in milliseconds) or the buffer size of the queue. The buffer size is shown as a percentage of the total interface buffer allocation, or by the keyword **remainder** to indicate that the buffer is sized according to what remains after other scheduler buffer allocations.
Priority	Scheduling priority: **low** or **high**.
Excess priority	Priority of excess bandwidth: **low**, **medium-low**, **medium-high**, **high**, or **none**.
Explicit Congestion Notification	(QFX Series, OCX Series, and EX4600 switches only) Explicit congestion notification (ECN) state: • Disable—ECN is disabled on the specified scheduler • Enable—ECN is enabled on the specified scheduler ECN is disabled by default.
Adjust minimum	Minimum shaping rate for an adjusted queue, in bps.
Adjust percent	Bandwidth adjustment applied to a queue, in percent.
Drop profiles	Table displaying the assignment of drop profiles by name and index to a given loss priority and protocol pair.
Loss priority	Packet loss priority for drop profile assignment.
Protocol	Transport protocol for drop profile assignment.
Name	Name of the drop profile.

Sample Output

show class-of-service scheduler-map

```
user@host> show class-of-service scheduler-map
Scheduler map: dd-scheduler-map, Index: 84

  Scheduler: aa-scheduler, Index: 8721, Forwarding class: aa-forwarding-class
   Transmit rate: 30 percent, Rate Limit: none, Maximum buffer delay: 39 ms,
   Priority: high
   Drop profiles:
```

```
    Loss priority   Protocol    Index    Name
     Low            non-TCP     8724     aa-drop-profile
     Low            TCP         9874     bb-drop-profile
     High           non-TCP     8833     cc-drop-profile
     High           TCP         8484     dd-drop-profile

  Scheduler: bb-scheduler, Forwarding class: aa-forwarding-class
   Transmit rate: 40 percent, Rate limit: none, Maximum buffer delay: 68 ms,
   Priority: high
   Drop profiles:
    Loss priority   Protocol    Index    Name
     Low            non-TCP     8724     aa-drop-profile
     Low            TCP         9874     bb-drop-profile
     High           non-TCP     8833     cc-drop-profile
     High           TCP         8484     dd-drop-profile
```

show class-of-service scheduler-map (QFX Series)

```
user@switch# show class-of-service scheduler-map
```

```
Scheduler map: be-map, Index: 12240

  Scheduler:be-sched, Forwarding class: best-effort, Index: 115
    Transmit rate: 30 percent, Rate Limit: none, Buffer size: remainder,
    Buffer Limit: none, Priority: low
    Excess Priority: unspecified, Explicit Congestion Notification: disable

    Drop profiles:
      Loss priority   Protocol    Index    Name
      Low             any          3312    lan-dp
      Medium-high     any          2714    be-dp1
      High            any          3178    be-dp2
```


Copyright © 2018, Juniper Networks, Inc.

show class-of-service traffic-control-profile

Syntax

```
show class-of-service traffic-control-profile
<profile-name>
```

Release Information

Command introduced before Junos OS Release 7.4.
Command introduced in Junos OS Release 11.1 for the QFX Series.
Command introduced in Junos OS Release 12.2 for ACX Series Routers.
Command introduced in Junos OS Release 15.1R3 on MX Series routers for enhanced subscriber management.

Description

For Gigabit Ethernet IQ PICs, Channelized IQ PICs, EQ DPCs, and MPC/MIC interfaces only, display traffic shaping and scheduling profiles.

(ACX Series routers) For ATM IMA pseudowire interfaces, display traffic shaping and scheduling profiles.

Options

none—Display all profiles.

profile-name—(Optional) Display information about a single profile.

Required Privilege Level

view

Related Documentation

- *Verifying and Managing Junos OS Enhanced Subscriber Management*

List of Sample Output

show class-of-service traffic-control-profile on page 935
show class-of-service traffic-control-profile (MX Series routers with Clear Channel Multi-Rate CE MIC) on page 936
show class-of-service traffic-control-profile (ACX Series routers with ATM IMA pseudowire interfaces) on page 936
show class-of-service traffic-control-profile (Enhanced Subscriber Management) on page 937

Output Fields

Table 174 on page 934 describes the output fields for the **show class-of-service traffic-control-profile** command. Output fields are listed in the approximate order in which they appear.

Table 174: show class-of-service traffic-control-profile Output Fields

Field Name	Field Description
Traffic control profile	Name of the traffic control profile. (Enhanced subscriber management for MX Series routers) The name of the dynamic traffic control profile object is associated with a generated UID (for example, **TC_PROF_100_199_SERIES_UID1000**) instead of with a subscriber interface.
Index	Index number of the traffic control profile. (Enhanced subscriber management for MX Series routers) Index values for dynamic CoS traffic control profiles are larger for enhanced subscriber management than they are for legacy subscriber management.
ATM Service	(MX Series routers with ATM Multi-Rate CE MIC) Configured category of ATM service. Possible values: • cbr—Constant bit rate. • rtvbr—Real time variable bit rate. • nrtvbr—Non real time variable bit rate. • ubr—Unspecified bit rate.
Maximum Burst Size	Configured maximum burst size, in cells.
Peak rate	Configured peak rate, in cps.
Sustained rate	Configured sustained rate, in cps.
Shaping rate	Configured shaping rate, in bps. NOTE: (MX Series routers with ATM Multi-Rate CE MIC) Configured peak rate, in cps.
Shaping rate burst	Configured burst size for the shaping rate, in bytes. NOTE: (MX Series routers with ATM Multi-Rate CE MIC) Configured maximum burst rate, in cells.
Shaping rate priority high	Configured shaping rate for high-priority traffic, in bps.
Shaping rate priority medium	Configured shaping rate for medium-priority traffic, in bps.
Shaping rate priority low	Configured shaping rate for low-priority traffic, in bps.
Shaping rate excess high	Configured shaping rate for high-priority excess traffic, in bps.
Shaping rate excess low	Configured shaping rate for low-priority excess traffic, in bps.

Copyright © 2018, Juniper Networks, Inc.

Table 174: show class-of-service traffic-control-profile Output Fields (continued)

Field Name	Field Description
Scheduler map	Name of the associated scheduler map. (Enhanced subscriber management for MX Series routers) The name of the dynamic scheduler map object is associated with a generated UID (for example, **SMAP-1_UID1002**) instead of with a subscriber interface.
Delay Buffer rate	Configured delay buffer rate, in bps.
Excess rate	Configured excess rate, in percent or proportion.
Excess rate high	Configured excess rate for high priority traffic, in percent or proportion.
Excess rate low	Configured excess rate for low priority traffic, in percent or proportion.
Guaranteed rate	Configured guaranteed rate, in bps or cps. NOTE: (MX Series routers with ATM Multi-Rate CE MIC) This value depends on the ATM service category chosen. Possible values: • **cbr**—Guaranteed rate is equal to the configured peak rate in cps. • **rtvbr**—Guaranteed rate is equal to the configured sustained rate in cps. • **nrtvbr**—Guaranteed rate is equal to the configured sustained rate in cps.
Guaranteed rate burst	Configured burst size for the guaranteed rate, in bytes.
adjust-minimum	Configured minimum shaping rate for an adjusted queue, in bps.
overhead accounting mode	Configured shaping mode: **Frame Mode** or **Cell Mode**.
Overhead bytes	Configured byte adjustment value.
Adjust parent	Configured shaping-rate adjustment for parent scheduler nodes. If enabled, this field appears. **flow-aware** indicates that the parent scheduler node is adjusted only once per multicast channel.

Sample Output

show class-of-service traffic-control-profile

```
user@host> show class-of-service traffic-control-profile
```

```
Traffic control profile: Profile1, Index: 57625
  Scheduler map: m1
```

```
  Delay Buffer rate: 500000
  Guaranteed rate: 1000000

Traffic control profile: Profile2, Index: 57624
  Scheduler map: m2
  Delay Buffer rate: 600000
  Guaranteed rate: 2000000

Traffic control profile: Profile3, Index: 57627
  Scheduler map: m3
  Delay Buffer rate: 800000
  Guaranteed rate: 3000000
 .Excess rate high: proportion 4

Traffic control profile: Profile4, Index: 57626
  Scheduler map: m4
  Delay Buffer rate: 750000
  Guaranteed rate: 4000000
..adjust-minimum 20000000

 Traffic control profile: foo, Index: 57626
   Shaping rate: 100000000
   Scheduler map: <default>
   Overhead accounting mode: Frame Mode
   Frame mode overhead accounting bytes: -12
   Adjust parent: flow-aware
```

show class-of-service traffic-control-profile (MX Series routers with Clear Channel Multi-Rate CE MIC)

user@host> **show class-of-service traffic-control-profile**

```
Traffic control profile: at-vbr1, Index: 11395
  ATM Service: RTVBR
  Scheduler map: m3
  overhead accounting mode: Frame Mode
  Shaping rate: 1000 cps
  Shaping rate burst: 500 cells
  Delay Buffer rate: 2000 cps
  Guaranteed rate: 1000 cps

Traffic control profile: foo, Index: 38286
  ATM Service: UBR
  Scheduler map: m3
  overhead accounting mode: Frame Mode
```

show class-of-service traffic-control-profile (ACX Series routers with ATM IMA pseudowire interfaces)

user@host> **show class-of-service traffic-control-profile**

```
Traffic control profile: foo, Index: 38286
  ATM Service: RTVBR
  Shaping rate: 2000 cps
  Shaping rate burst: 200 cells
  Scheduler map: <default>
  Delay Buffer rate: 1000 cps
  Guaranteed rate: 1700 cps
```


Copyright © 2018, Juniper Networks, Inc.

show class-of-service traffic-control-profile (Enhanced Subscriber Management)

user@host> **show class-of-service traffic-control-profile**

```
Traffic control profile: TC_PROF_100_199_SERIES_UID1000, Index: 4294967313
  Shaping rate: 11000000
  Shaping rate burst: 1 bytes
  Scheduler map: SMAP-1_UID1002
  Delay Buffer rate: 5000000
  Overhead accounting mode: Cell Mode
  Frame mode overhead accounting bytes: -4
  Cell mode overhead accounting bytes: 20
```

show interfaces queue

Syntax

```
show interfaces queue
<aggregate | remaining-traffic>
<both-ingress-egress>
<egress>
<forwarding-class forwarding-class>
<ingress>
<interface-name interface-name>
<l2-statistics>
```

Release Information

Command introduced before Junos OS Release 7.4.
both-ingress-egress, **egress**, and **ingress** options introduced in Junos OS Release 7.6.
Command introduced in Junos OS Release 11.1 for the QFX Series.
l2-statistics option introduced in Junos OS Release 12.1.
Command introduced in Junos OS Release 14.1X53-D20 for the OCX Series.

Description

Display class-of-service (CoS) queue information for physical interfaces.

Options

none—Show detailed CoS queue statistics for all physical interfaces.

aggregate—(Optional) Display the aggregated queuing statistics of all logical interfaces that have traffic-control profiles configured. (Not on the QFX Series.)

both-ingress-egress—(Optional) On Gigabit Ethernet Intelligent Queuing 2 (IQ2) PICs, display both ingress and egress queue statistics. (Not on the QFX Series.)

egress—(Optional) Display egress queue statistics.

forwarding-class *forwarding-class*—(Optional) Forwarding class name for this queue. Shows detailed CoS statistics for the queue associated with the specified forwarding class.

ingress—(Optional) On Gigabit Ethernet IQ2 PICs, display ingress queue statistics. (Not on the QFX Series.)

interface-name *interface-name*—(Optional) Show detailed CoS queue statistics for the specified interface.

l2-statistics—(Optional) Display Layer 2 statistics for MLPPP, FRF.15, and FRF.16 bundles

remaining-traffic—(Optional) Display the remaining-traffic queue statistics of all logical interfaces that have traffic-control profiles configured.

Overhead for Layer 2 Statistics

Transmitted packets and transmitted byte counts are displayed for the Layer 2 level with the addition of encapsulation overheads applied for fragmentation, as shown in Table 175 on page 939. Others counters, such as packets and bytes queued (input)

Copyright © 2018, Juniper Networks, Inc.

and drop counters, are displayed at the Layer 3 level. In the case of link fragmentation and interleaving (LFI) for which fragmentation is not applied, corresponding Layer 2 overheads are added, as shown in Table 175 on page 939.

Table 175: Layer 2 Overhead and Transmitted Packets or Byte Counts

Protocol	Fragmentation		LFI
	First fragmentation	Second to *n* fragmentations	
	Bytes	Bytes	
MLPPP (Long)	13	12	8
MLPPP (short)	11	10	8
MLFR (FRF15)	12	10	8
MFR (FRF16)	10	8	-
MCMLPPP(Long)	13	12	-
MCMLPPP(Short)	11	10	-

Layer 2 Statistics—Fragmentation Overhead Calculation

```
MLPPP/MC-MLPPP Overhead details:
   ==============================
   Fragment 1:

    Outer PPP header                        : 4 bytes
    Long or short sequence MLPPP header     : 4 bytes or 2 bytes
    Inner PPP header                        : 1 byte
    HDLC flag and FCS bytes                 : 4 bytes

   Fragments 2 .. n :

    Outer PPP header                        : 4 bytes
    Long or short sequence MLPPP header     : 4 bytes or 2 bytes
    HDLC flag and FCS bytes                 : 4 bytes


   MLFR (FRF15) Overhead details:
   ============================
   Fragment 1:
       Framerelay header     :  2 bytes
       Control,NLPID         :  2 bytes
       Fragmentaion header   :  2 bytes
       Inner proto           :  2 bytes
       HDLC flag and  FCS    :  4 bytes

   Fragments 2 ...n :

       Framerelay header     :  2 bytes
```

```
      Control,NLPID         :  2 bytes
      Fragmentaion header   :  2 bytes
      HDLC flag and  FCS    :  4 bytes


  MFR (FRF16) Overhead details:
  ==============================
  Fragment 1:
     Fragmentaion header   :  2 bytes
     Framerelay header     :  2 bytes
     Inner proto           :  2 bytes
     HDLC flag and  FCS    :  4 bytes

  Fragments 2 ...n :
     Fragmentaion header   :  2 bytes
     Framerelay header     :  2 bytes
     HDLC flag and  FCS    :  4 bytes
```

Overhead with LFI

```
MLPPP(Long & short sequence):
   ============================
      Outer PPP header      :  4 bytes
      HDLC flag and  FCS    :  4 bytes

  MLFR (FRF15):
  =============
      Framerelay header     :  2 bytes
      Control,NLPID         :  2 bytes
      HDLC flag and  FCS    :  4 bytes
```

The following examples show overhead for different cases:

- A 1000-byte packet is sent to a mlppp bundle without any fragmentation. At the Layer 2 level, bytes transmitted is 1013 in 1 packet. This overhead is for MLPPP long sequence encap.
- A 1000-byte packet is sent to a mlppp bundle with a fragment threshold of 250byte. At the Layer 2 level, bytes transmitted is 1061 bytes in 5 packets.
- A 1000-byte LFI packet is sent to an mlppp bundle. At the Layer 2 level, bytes transmitted is 1008 in 1 packet.

remaining-traffic—(Optional) Display the queuing statistics of all logical interfaces that do not have traffic-control profiles configured. (Not on the QFX Series.)

Additional Information For rate-limited interfaces hosted on Modular Interface Cards (MICs), Modular Port Concentrators (MPCs), or Enhanced Queuing DPCs, rate-limit packet-drop operations occur *before* packets are queued for transmission scheduling. For such interfaces, the statistics for queued traffic do not include the packets that have already been dropped due to rate limiting, and consequently the displayed statistics for queued traffic are the same as the displayed statistics for transmitted traffic.

 Copyright © 2018, Juniper Networks, Inc.

NOTE: For rate-limited interfaces hosted on other types of hardware, rate-limit packet-drop operations occur *after* packets are queued for transmission scheduling. For these other interface types, the statistics for queued traffic include the packets that are later dropped due to rate limiting, and consequently the displayed statistics for queued traffic equals the sum of the statistics for transmitted and rate-limited traffic.

On M Series routers (except for the M320 and M120 routers), this command is valid only for a PIC installed on an enhanced Flexible PIC Concentrator (FPC).

Queue statistics for aggregated interfaces are supported on the M Series and T Series routers only. Statistics for an aggregated interface are the summation of the queue statistics of the child links of that aggregated interface. You can view the statistics for a child interface by using the **show interfaces statistics** command for that child interface.

When you configure tricolor marking on a 10-port 1-Gigabit Ethernet PIC, for queues 6 and 7 only, the output does not display the number of queued bytes and packets, or the number of bytes and packets dropped because of RED. If you do not configure tricolor marking on the interface, these statistics are available for all queues.

For the 4-port Channelized OC12 IQE PIC and 1-port Channelized OC48 IQE PIC, the **Packet Forwarding Engine Chassis Queues** field represents traffic bound for a particular physical interface on the PIC. For all other PICs, the **Packet Forwarding Engine Chassis Queues** field represents the total traffic bound for the PIC.

For Gigabit Ethernet IQ2 PICs, the **show interfaces queue** command output does not display the number of tail-dropped packets. This limitation does not apply to Packet Forwarding Engine chassis queues.

When fragmentation occurs on the egress interface, the first set of packet counters shows the postfragmentation values. The second set of packet counters (under the **Packet Forwarding Engine Chassis Queues** field) shows the prefragmentation values.

The behavior of the **egress** queues for the **Routing Engine-Generated Traffic** is not same as the configured queue for MLPPP and MFR configurations.

For related CoS operational mode commands, see the CLI Explorer.

Required Privilege Level view

List of Sample Output

show interfaces queue (Rate-Limited Interface on a Gigabit Ethernet MIC in an MPC) on page 947
show interfaces queue (Aggregated Ethernet on a T320 Router) on page 948
show interfaces queue (Gigabit Ethernet on a T640 Router) on page 950
show interfaces queue aggregate (Gigabit Ethernet Enhanced DPC) on page 951
show interfaces queue (Gigabit Ethernet IQ2 PIC) on page 954
show interfaces queue both-ingress-egress (Gigabit Ethernet IQ2 PIC) on page 957

show interfaces queue ingress (Gigabit Ethernet IQ2 PIC) on page 960
show interfaces queue egress (Gigabit Ethernet IQ2 PIC) on page 960
show interfaces queue remaining-traffic (Gigabit Ethernet Enhanced DPC) on page 962
show interfaces queue (Channelized OC12 IQE Type 3 PIC in SONET Mode) on page 965
show interfaces queue (QFX Series) on page 975
show interfaces queue l2-statistics (lsq interface) on page 976
show interfaces queue lsq (lsq-ifd) on page 976
show interfaces queue (Aggregated Ethernet on a MX series Router) on page 978

Output Fields Table 176 on page 942 lists the output fields for the **show interfaces queue** command. Output fields are listed in the approximate order in which they appear.

Table 176: show interfaces queue Output Fields

Field Name	Field Description
Physical interface	Name of the physical interface.
Enabled	State of the interface. Possible values are described in the “Enabled Field” section under *Common Output Fields Description*.
Interface index	Physical interface's index number, which reflects its initialization sequence.
SNMP ifIndex	SNMP index number for the interface.
Forwarding classes supported	Total number of forwarding classes supported on the specified interface.
Forwarding classes in use	Total number of forwarding classes in use on the specified interface.
Ingress queues supported	On Gigabit Ethernet IQ2 PICs only, total number of ingress queues supported on the specified interface.
Ingress queues in use	On Gigabit Ethernet IQ2 PICs only, total number of ingress queues in use on the specified interface.
Output queues supported	Total number of output queues supported on the specified interface.
Output queues in use	Total number of output queues in use on the specified interface.
Egress queues supported	Total number of egress queues supported on the specified interface.
Egress queues in use	Total number of egress queues in use on the specified interface.

 Copyright © 2018, Juniper Networks, Inc.

Table 176: show interfaces queue Output Fields (continued)

Field Name	Field Description
Queue counters (Ingress)	CoS queue number and its associated user-configured forwarding class name. Displayed on IQ2 interfaces. • **Queued packets**—Number of queued packets. NOTE: This field is not supported on QFX5100, QFX5110, QFX5200, and QFX5210 switches due to hardware limitations. • **Transmitted packets**—Number of transmitted packets. • **Dropped packets**—Number of packets dropped by the ASIC's RED mechanism.
Burst size	(Logical interfaces on IQ PICs only) Maximum number of bytes up to which the logical interface can burst. The burst size is based on the shaping rate applied to the interface.
The following output fields are applicable to both interface component and Packet Forwarding component in the **show interfaces queue** command:	
Queue	Queue number.
Forwarding classes	Forwarding class name.
Queued Packets	Number of packets queued to this queue. NOTE: For Gigabit Ethernet IQ2 interfaces, the Queued Packets count is calculated by the Junos OS interpreting one frame buffer as one packet. If the queued packets are very large or very small, the calculation might not be completely accurate for transit traffic. The count is completely accurate for traffic terminated on the router. For rate-limited interfaces hosted on MICs or MPCs only, this statistic does not include traffic dropped due to rate limiting. For more information, see "Additional Information" on page 940. NOTE: This field is not supported on QFX5100, QFX5110, QFX5200, and QFX5210 switches due to hardware limitations.
Queued Bytes	Number of bytes queued to this queue. The byte counts vary by interface hardware. For more information, see Table 177 on page 946. For rate-limited interfaces hosted on MICs or MPCs only, this statistic does not include traffic dropped due to rate limiting. For more information, see "Additional Information" on page 940. NOTE: This field is not supported on QFX5100, QFX5110, QFX5200, and QFX5210 switches due to hardware limitations.
Transmitted Packets	Number of packets transmitted by this queue. When fragmentation occurs on the egress interface, the first set of packet counters shows the postfragmentation values. The second set of packet counters (displayed under the **Packet Forwarding Engine Chassis Queues** field) shows the prefragmentation values. NOTE: For Layer 2 statistics, see "Overhead for Layer 2 Statistics" on page 938

Table 176: show interfaces queue Output Fields (continued)

Field Name	Field Description
Transmitted Bytes	Number of bytes transmitted by this queue. The byte counts vary by interface hardware. For more information, see Table 177 on page 946. NOTE: On MX Series routers, this number can be inaccurate when you issue the command for a physical interface repeatedly and in quick succession, because the statistics for the child nodes are collected infrequently. Wait ten seconds between successive iterations to avoid this situation. NOTE: For Layer 2 statistics, see "Overhead for Layer 2 Statistics" on page 938
Tail-dropped packets	Number of packets dropped because of tail drop. NOTE: Starting with Junos OS 18.3R1, the **Tail-dropped packets** counter is supported on PTX Series Packet Transport Routers.
RL-dropped packets	Number of packets dropped due to rate limiting. For rate-limited interfaces hosted on MICs, MPCs, and Enhanced Queuing DPCs only, this statistic is not included in the queued traffic statistics. For more information, see "Additional Information" on page 940. NOTE: The **RL-dropped packets** counter is not supported on the PTX Series Packet Transport Routers, and is omitted from the output.
RL-dropped bytes	Number of bytes dropped due to rate limiting. For rate-limited interfaces hosted on MICs, MPCs, and Enhanced Queuing DPCs only, this statistic is not included in the queued traffic statistics. For more information, see "Additional Information" on page 940.

RED-dropped packets	Number of packets dropped because of random early detection (RED).
	
	• (M Series and T Series routers only) On M320 and M120 routers and the T Series routers, the total number of dropped packets is displayed. On all other M Series routers, the output classifies dropped packets into the following categories:
	  ◦ **Low, non-TCP**—Number of low-loss priority non-TCP packets dropped because of RED.
	  ◦ **Low, TCP**—Number of low-loss priority TCP packets dropped because of RED.
	  ◦ **High, non-TCP**—Number of high-loss priority non-TCP packets dropped because of RED.
	  ◦ **High, TCP**—Number of high-loss priority TCP packets dropped because of RED.
	
	• (MX Series routers with enhanced DPCs, and T Series routers with enhanced FPCs only) The output classifies dropped packets into the following categories:
	  ◦ **Low**—Number of low-loss priority packets dropped because of RED.
	  ◦ **Medium-low**—Number of medium-low loss priority packets dropped because of RED.
	  ◦ **Medium-high**—Number of medium-high loss priority packets dropped because of RED.
	  ◦ **High**—Number of high-loss priority packets dropped because of RED.
	
	NOTE: Due to accounting space limitations on certain Type 3 FPCs (which are supported in M320 and T640 routers), this field does not always display the correct value for queue 6 or queue 7 for interfaces on 10-port 1-Gigabit Ethernet PICs.

Copyright © 2018, Juniper Networks, Inc.

Table 176: show interfaces queue Output Fields (continued)

Field Name	Field Description
RED-dropped bytes	Number of bytes dropped because of RED. The byte counts vary by interface hardware. For more information, see Table 177 on page 946. • (M Series and T Series routers only) On M320 and M120 routers and the T Series routers, only the total number of dropped bytes is displayed. On all other M Series routers, the output classifies dropped bytes into the following categories: ◦ **Low, non-TCP**—Number of low-loss priority non-TCP bytes dropped because of RED. ◦ **Low, TCP**—Number of low-loss priority TCP bytes dropped because of RED. ◦ **High, non-TCP**—Number of high-loss priority non-TCP bytes dropped because of RED. ◦ **High, TCP**—Number of high-loss priority TCP bytes dropped because of RED. NOTE: Due to accounting space limitations on certain Type 3 FPCs (which are supported in M320 and T640 routers), this field does not always display the correct value for queue 6 or queue 7 for interfaces on 10-port 1-Gigabit Ethernet PICs.
Queue-depth bytes	Displays queue-depth average, current, peak, and maximum values for RTP queues. Because queue-depth values cannot be aggregated, displays the values for RTP queues regardless of whether **aggregate**, **remaining-traffic**, or neither option is selected.
Queue-depth bytes	Displays queue-depth average, current, peak, and maximum values for RTP queues. Because queue-depth values cannot be aggregated, displays the values for RTP queues regardless of whether **aggregate**, **remaining-traffic**, or neither option is selected.
Last-packet enqueued	Starting with Junos OS Release 16.1, **Last-packet enqueued** output field is introduced. If **packet-timestamp** is enabled for an FPC, shows the day, date, time, and year in the format *day-of-the-week month day-date hh:mm:ss yyyy* when a packet was enqueued in the CoS queue. When the timestamp is aggregated across all active Packet Forwarding Engines, the latest timestamp for each CoS queue is reported.

Byte counts vary by interface hardware. Table 177 on page 946 shows how the byte counts on the outbound interfaces vary depending on the interface hardware.

Table 177 on page 946 is based on the assumption that outbound interfaces are sending IP traffic with 478 bytes per packet.

Table 177: Byte Count by Interface Hardware

Interface Hardware	Output Level	Byte Count Includes	Comments
Gigabit Ethernet IQ and IQE PICs	Interface	Queued: 490 bytes per packet, representing 478 bytes of Layer 3 packet + 12 bytes Transmitted: 490 bytes per packet, representing 478 bytes of Layer 3 packet + 12 bytes RED dropped: 496 bytes per packet representing 478 bytes of Layer 3 packet + 18 bytes	The 12 additional bytes include 6 bytes for the destination MAC address + 4 bytes for the VLAN + 2 bytes for the Ethernet type. For RED dropped, 6 bytes are added for the source MAC address.
	Packet forwarding component	Queued: 478 bytes per packet, representing 478 bytes of Layer 3 packet Transmitted: 478 bytes per packet, representing 478 bytes of Layer 3 packet	–
Non-IQ PIC	Interface	T Series, TX Series, T1600, and MX Series routers: • Queued: 478 bytes of Layer 3 packet. • Transmitted: 478 bytes of Layer 3 packet. T4000 routers with Type 5 FPCs : • Queued: 478 bytes of Layer 3 packet + the full Layer 2 overhead including 4 bytes CRC + the full Layer 1 overhead 8 bytes preamble + 12 bytes Inter frame Gap. • Transmitted: 478 bytes of Layer 3 packet + the full Layer 2 overhead including 4 bytes CRC + the full Layer 1 overhead 8 bytes preamble + 12 bytes Interframe Gap. M Series routers: • Queued: 478 bytes of Layer 3 packet. • Transmitted: 478 bytes of Layer 3 packet + the full Layer 2 overhead. PTX Series Packet Transport Routers: • Queued: The sum of the transmitted bytes and the RED dropped bytes. • Transmitted: Full Layer 2 overhead (including all L2 encapsulation and CRC) + 12 inter-packet gap + 8 for the preamble. • RED dropped: Full Layer 2 overhead (including all L2 encapsulation and CRC) + 12 inter-packet gap + 8 for the preamble (does not include the VLAN header or MPLS pushed bytes).	The Layer 2 overhead is 14 bytes for non-VLAN traffic and 18 bytes for VLAN traffic.

Copyright © 2018, Juniper Networks, Inc.

Table 177: Byte Count by Interface Hardware (continued)

Interface Hardware	Output Level	Byte Count Includes	Comments
IQ and IQE PICs with a SONET/SDH interface	Interface	Queued: 482 bytes per packet, representing 478 bytes of Layer 3 packet + 4 bytes Transmitted: 482 bytes per packet, representing 478 bytes of Layer 3 packet + 4 bytes RED dropped: 482 bytes per packet, representing 478 bytes of Layer 3 packet + 4 bytes	The additional 4 bytes are for the Layer 2 Point-to-Point Protocol (PPP) header.
	Packet forwarding component	Queued: 478 bytes per packet, representing 478 bytes of Layer 3 packet Transmitted: 486 bytes per packet, representing 478 bytes of Layer 3 packet + 8 bytes	For transmitted packets, the additional 8 bytes includes 4 bytes for the PPP header and 4 bytes for a cookie.
Non-IQ PIC with a SONET/SDH interface	Interface	T Series, TX Series, T1600, and MX Series routers: • Queued: 478 bytes of Layer 3 packet. • Transmitted: 478 bytes of Layer 3 packet. M Series routers: • Queued: 478 bytes of Layer 3 packet. • Transmitted: 483 bytes per packet, representing 478 bytes of Layer 3 packet + 5 bytes • RED dropped: 478 bytes per packet, representing 478 bytes of Layer 3 packet	For transmitted packets, the additional 5 bytes includes 4 bytes for the PPP header and 1 byte for the packet loss priority (PLP).
Interfaces configured with Frame Relay Encapsulation	Interface	The default Frame Relay overhead is 7 bytes. If you configure the Frame Check Sequence (FCS) to 4 bytes, then the overhead increases to 10 bytes.	
1-port 10-Gigabit Ethernet IQ2 and IQ2–E PICs 4-port 1G IQ2 and IQ2-E PICs 8-port 1G IQ2 and IQ2-E PICs	Interface	Queued: 478 bytes of Layer 3 packet + the full Layer 2 overhead including CRC. Transmitted: 478 bytes of Layer 3 packet + the full Layer 2 overhead including CRC.	The Layer 2 overhead is 18 bytes for non-VLAN traffic and 22 bytes for VLAN traffic.
	Packet forwarding component	Queued: 478 bytes of Layer 3 packet. Transmitted: 478 bytes of Layer 3 packet.	–

Sample Output

show interfaces queue (Rate-Limited Interface on a Gigabit Ethernet MIC in an MPC)

The following example shows queue information for the rate-limited interface ge-4/2/0 on a Gigabit Ethernet MIC in an MPC. For rate-limited queues for interfaces hosted on MICs or MPCs, rate-limit packet drops occur prior to packet output queuing. In the

command output, the nonzero statistics displayed in the **RL-dropped packets** and **RL-dropped bytes** fields quantify the traffic dropped to rate-limit queue 0 output to 10 percent of 1 gigabyte (100 megabits) per second. Because the RL-dropped traffic is not included in the **Queued** statistics, the statistics displayed for queued traffic are the same as the statistics for transmitted traffic.

user@host> **show interfaces queue ge-4/2/0**

```
Physical interface: ge-4/2/0, Enabled, Physical link is Up
  Interface index: 203, SNMP ifIndex: 1054
Forwarding classes: 16 supported, 4 in use
Egress queues: 8 supported, 4 in use
Queue: 0, Forwarding classes: best-effort
  Queued:
    Packets              :             131300649                141751 pps
    Bytes                :           11287964840              99793248 bps
  Transmitted:
    Packets              :             131300649                141751 pps
    Bytes                :           11287964840              99793248 bps
    Tail-dropped packets :                     0                     0 pps
    RL-dropped packets   :             205050862                602295 pps
    RL-dropped bytes     :           13595326612             327648832 bps
    RED-dropped packets  :                     0                     0 pps
     Low                 :                     0                     0 pps
     Medium-low          :                     0                     0 pps
     Medium-high         :                     0                     0 pps
     High                :                     0                     0 pps
    RED-dropped bytes    :                     0                     0 bps
     Low                 :                     0                     0 bps
     Medium-low          :                     0                     0 bps
     Medium-high         :                     0                     0 bps
     High                :                     0                     0 bps
Queue: 1, Forwarding classes: expedited-forwarding
  Queued:
    Packets              :                     0                     0 pps
    Bytes                :                     0                     0 bps
```

show interfaces queue (Aggregated Ethernet on a T320 Router)

The following example shows that the aggregated Ethernet interface, **ae1**, has traffic on queues **af1** and **af12**:

user@host> **show interfaces queue ae1**

```
Physical interface: ae1, Enabled, Physical link is Up
Interface index: 158, SNMP ifIndex: 33 Forwarding classes: 8 supported, 8 in use
Output queues: 8 supported, 8 in use
Queue: 0, Forwarding classes: be
  Queued:
    Packets              :                     5                     0 pps
    Bytes                :                   242                     0 bps
  Transmitted:
    Packets              :                     5                     0 pps
    Bytes                :                   242                     0 bps
    Tail-dropped packets :                     0                     0 pps
    RED-dropped packets  :                     0                     0 pps
    RED-dropped bytes    :                     0                     0 bps
Queue: 1, Forwarding classes: af1
```


Copyright © 2018, Juniper Networks, Inc.

```
  Queued:
    Packets              :              42603765                595484 pps
    Bytes                :            5453281920             609776496 bps
  Transmitted:
    Packets              :              42603765                595484 pps
    Bytes                :            5453281920             609776496 bps
    Tail-dropped packets :                     0                     0 pps
    RED-dropped packets  :                     0                     0 pps
    RED-dropped bytes    :                     0                     0 bps
Queue: 2, Forwarding classes: ef1
  Queued:
    Packets              :                     0                     0 pps
    Bytes                :                     0                     0 bps
  Transmitted:
    Packets              :                     0                     0 pps
    Bytes                :                     0                     0 bps
    Tail-dropped packets :                     0                     0 pps
    RED-dropped packets  :                     0                     0 pps
    RED-dropped bytes    :                     0                     0 bps
Queue: 3, Forwarding classes: nc
  Queued:
    Packets              :                    45                     0 pps
    Bytes                :                  3930                     0 bps
  Transmitted:
    Packets              :                    45                     0 pps
    Bytes                :                  3930                     0 bps
    Tail-dropped packets :                     0                     0 pps
    RED-dropped packets  :                     0                     0 pps
    RED-dropped bytes    :                     0                     0 bps
Queue: 4, Forwarding classes: af11
  Queued:
    Packets              :                     0                     0 pps
    Bytes                :                     0                     0 bps
  Transmitted:
    Packets              :                     0                     0 pps
    Bytes                :                     0                     0 bps
    Tail-dropped packets :                     0                     0 pps
    RED-dropped packets  :                     0                     0 pps
    RED-dropped bytes    :                     0                     0 bps
Queue: 5, Forwarding classes: ef11
  Queued:
    Packets              :                     0                     0 pps
    Bytes                :                     0                     0 bps
  Transmitted:
    Packets              :                     0                     0 pps
    Bytes                :                     0                     0 bps
    Tail-dropped packets :                     0                     0 pps
    RED-dropped packets  :                     0                     0 pps
    RED-dropped bytes    :                     0                     0 bps
Queue: 6, Forwarding classes: af12
  Queued:
    Packets              :              31296413                437436 pps
    Bytes                :            4005940864             447935200 bps
  Transmitted:
    Packets              :              31296413                437436 pps
    Bytes                :            4005940864             447935200 bps
    Tail-dropped packets :                     0                     0 pps
    RED-dropped packets  :                     0                     0 pps
    RED-dropped bytes    :                     0                     0 bps
Queue: 7, Forwarding classes: nc2
```

```
 Queued:
   Packets              :                    0                    0 pps
   Bytes                :                    0                    0 bps
 Transmitted:
   Packets              :                    0                    0 pps
   Bytes                :                    0                    0 bps
   Tail-dropped packets :                    0                    0 pps
   RED-dropped packets  :                    0                    0 pps
   RED-dropped bytes    :                    0                    0 bps
```

show interfaces queue (Gigabit Ethernet on a T640 Router)

user@host> **show interfaces queue**

```
Physical interface: ge-7/0/1, Enabled, Physical link is Up
   Interface index: 150, SNMP ifIndex: 42
 Forwarding classes: 8 supported, 8 in use
 Output queues: 8 supported, 8 in use
 Queue: 0, Forwarding classes: be
   Queued:
     Packets              :                   13                    0 pps
     Bytes                :                  622                    0 bps
   Transmitted:
     Packets              :                   13                    0 pps
     Bytes                :                  622                    0 bps
     Tail-dropped packets :                    0                    0 pps
     RED-dropped packets  :                    0                    0 pps
     RED-dropped bytes    :                    0                    0 bps
 Queue: 1, Forwarding classes: af1
   Queued:
     Packets              :           1725947945               372178 pps
     Bytes                :          220921336960            381110432 bps
   Transmitted:
     Packets              :           1725947945               372178 pps
     Bytes                :          220921336960            381110432 bps
     Tail-dropped packets :                    0                    0 pps
     RED-dropped packets  :                    0                    0 pps
     RED-dropped bytes    :                    0                    0 bps
 Queue: 2, Forwarding classes: ef1
   Queued:
     Packets              :                    0                    0 pps
     Bytes                :                    0                    0 bps
   Transmitted:
     Packets              :                    0                    0 pps
     Bytes                :                    0                    0 bps
     Tail-dropped packets :                    0                    0 pps
     RED-dropped packets  :                    0                    0 pps
     RED-dropped bytes    :                    0                    0 bps
 Queue: 3, Forwarding classes: nc
   Queued:
     Packets              :                  571                    0 pps
     Bytes                :                49318                  336 bps
   Transmitted:
     Packets              :                  571                    0 pps
     Bytes                :                49318                  336 bps
     Tail-dropped packets :                    0                    0 pps
     RED-dropped packets  :                    0                    0 pps
     RED-dropped bytes    :                    0                    0 bps
```


Copyright © 2018, Juniper Networks, Inc.

show interfaces queue aggregate (Gigabit Ethernet Enhanced DPC)

```
user@host> show interfaces queue ge-2/2/9 aggregate
Physical interface: ge-2/2/9, Enabled, Physical link is Up
  Interface index: 238, SNMP ifIndex: 71
Forwarding classes: 16 supported, 4 in use
Ingress queues: 4 supported, 4 in use
Queue: 0, Forwarding classes: best-effort
  Queued:
    Packets              :             148450735                947295 pps
    Bytes                :            8016344944             409228848 bps
  Transmitted:
    Packets              :              76397439                487512 pps
    Bytes                :            4125461868             210602376 bps
    Tail-dropped packets : Not Available
    RED-dropped packets  :              72053285                459783 pps
     Low                 :              72053285                459783 pps
     Medium-low          :                     0                     0 pps
     Medium-high         :                     0                     0 pps
     High                :                     0                     0 pps
    RED-dropped bytes    :            3890877444             198626472 bps
     Low                 :            3890877444             198626472 bps
     Medium-low          :                     0                     0 bps
     Medium-high         :                     0                     0 bps
     High                :                     0                     0 bps
Queue: 1, Forwarding classes: expedited-forwarding
  Queued:
    Packets              :                     0                     0 pps
    Bytes                :                     0                     0 bps
  Transmitted:
    Packets              :                     0                     0 pps
    Bytes                :                     0                     0 bps
    Tail-dropped packets : Not Available
    RED-dropped packets  :                     0                     0 pps
     Low                 :                     0                     0 pps
     Medium-low          :                     0                     0 pps
     Medium-high         :                     0                     0 pps
     High                :                     0                     0 pps
    RED-dropped bytes    :                     0                     0 bps
     Low                 :                     0                     0 bps
     Medium-low          :                     0                     0 bps
     Medium-high         :                     0                     0 bps
     High                :                     0                     0 bps
Queue: 2, Forwarding classes: assured-forwarding
  Queued:
    Packets              :             410278257                473940 pps
    Bytes                :           22156199518             204742296 bps
  Transmitted:
    Packets              :               4850003                  4033 pps
    Bytes                :             261900162               1742256 bps
    Tail-dropped packets : Not Available
    RED-dropped packets  :             405425693                469907 pps
     Low                 :             405425693                469907 pps
     Medium-low          :                     0                     0 pps
     Medium-high         :                     0                     0 pps
     High                :                     0                     0 pps
    RED-dropped bytes    :           21892988124             203000040 bps
     Low                 :           21892988124             203000040 bps
```

```
     Medium-low          :                    0                    0 bps
     Medium-high         :                    0                    0 bps
     High                :                    0                    0 bps
Queue: 3, Forwarding classes: network-control
  Queued:
    Packets              :                    0                    0 pps
    Bytes                :                    0                    0 bps
  Transmitted:
    Packets              :                    0                    0 pps
    Bytes                :                    0                    0 bps
    Tail-dropped packets : Not Available
    RED-dropped packets  :                    0                    0 pps
     Low                 :                    0                    0 pps
     Medium-low          :                    0                    0 pps
     Medium-high         :                    0                    0 pps
     High                :                    0                    0 pps
    RED-dropped bytes    :                    0                    0 bps
     Low                 :                    0                    0 bps
     Medium-low          :                    0                    0 bps
     Medium-high         :                    0                    0 bps
     High                :                    0                    0 bps
Forwarding classes: 16 supported, 4 in use
Egress queues: 4 supported, 4 in use
Queue: 0, Forwarding classes: best-effort
  Queued:
    Packets              :              76605230               485376 pps
    Bytes                :            5209211400            264044560 bps
  Transmitted:
    Packets              :              76444631               484336 pps
    Bytes                :            5198235612            263478800 bps
    Tail-dropped packets : Not Available
    RED-dropped packets  :                160475                 1040 pps
     Low                 :                160475                 1040 pps
     Medium-low          :                    0                    0 pps
     Medium-high         :                    0                    0 pps
     High                :                    0                    0 pps
    RED-dropped bytes    :              10912300               565760 bps
     Low                 :              10912300               565760 bps
     Medium-low          :                    0                    0 bps
     Medium-high         :                    0                    0 bps
     High                :                    0                    0 bps
Queue: 1, Forwarding classes: expedited-forwarding
  Queued:
    Packets              :                    0                    0 pps
    Bytes                :                    0                    0 bps
  Transmitted:
    Packets              :                    0                    0 pps
    Bytes                :                    0                    0 bps
    Tail-dropped packets : Not Available
    RED-dropped packets  :                    0                    0 pps
     Low                 :                    0                    0 pps
     Medium-low          :                    0                    0 pps
     Medium-high         :                    0                    0 pps
     High                :                    0                    0 pps
    RED-dropped bytes    :                    0                    0 bps
     Low                 :                    0                    0 bps
     Medium-low          :                    0                    0 bps
     Medium-high         :                    0                    0 bps
     High                :                    0                    0 bps
Queue: 2, Forwarding classes: assured-forwarding
```


Copyright © 2018, Juniper Networks, Inc.

```
  Queued:
    Packets              :               4836136                  3912 pps
    Bytes                :             333402032               2139056 bps
  Transmitted:
    Packets              :               3600866                  1459 pps
    Bytes                :             244858888                793696 bps
    Tail-dropped packets : Not Available
    RED-dropped packets  :               1225034                  2450 pps
     Low                 :               1225034                  2450 pps
     Medium-low          :                     0                     0 pps
     Medium-high         :                     0                     0 pps
     High                :                     0                     0 pps
    RED-dropped bytes    :              83302312               1333072 bps
     Low                 :              83302312               1333072 bps
     Medium-low          :                     0                     0 bps
     Medium-high         :                     0                     0 bps
     High                :                     0                     0 bps
Queue: 3, Forwarding classes: network-control
  Queued:
    Packets              :                     0                     0 pps
    Bytes                :                     0                     0 bps
  Transmitted:
    Packets              :                     0                     0 pps
    Bytes                :                     0                     0 bps
    Tail-dropped packets : Not Available
    RED-dropped packets  :                     0                     0 pps
     Low                 :                     0                     0 pps
     Medium-low          :                     0                     0 pps
     Medium-high         :                     0                     0 pps
     High                :                     0                     0 pps
    RED-dropped bytes    :                     0                     0 bps
     Low                 :                     0                     0 bps
     Medium-low          :                     0                     0 bps
     Medium-high         :                     0                     0 bps
     High                :                     0                     0 bps

Packet Forwarding Engine Chassis Queues:
Queues: 4 supported, 4 in use
Queue: 0, Forwarding classes: best-effort
  Queued:
    Packets              :              77059796                486384 pps
    Bytes                :            3544750624             178989576 bps
  Transmitted:
    Packets              :              77059797                486381 pps
    Bytes                :            3544750670             178988248 bps
    Tail-dropped packets :                     0                     0 pps
    RED-dropped packets  :                     0                     0 pps
     Low                 :                     0                     0 pps
     Medium-low          :                     0                     0 pps
     Medium-high         :                     0                     0 pps
     High                :                     0                     0 pps
    RED-dropped bytes    :                     0                     0 bps
     Low                 :                     0                     0 bps
     Medium-low          :                     0                     0 bps
     Medium-high         :                     0                     0 bps
     High                :                     0                     0 bps
Queue: 1, Forwarding classes: expedited-forwarding
  Queued:
    Packets              :                     0                     0 pps
    Bytes                :                     0                     0 bps
```

```
  Transmitted:
    Packets              :                    0                    0 pps
    Bytes                :                    0                    0 bps
    Tail-dropped packets :                    0                    0 pps
    RED-dropped packets  :                    0                    0 pps
     Low                 :                    0                    0 pps
     Medium-low          :                    0                    0 pps
     Medium-high         :                    0                    0 pps
     High                :                    0                    0 pps
    RED-dropped bytes    :                    0                    0 bps
     Low                 :                    0                    0 bps
     Medium-low          :                    0                    0 bps
     Medium-high         :                    0                    0 bps
     High                :                    0                    0 bps
Queue: 2, Forwarding classes: assured-forwarding
  Queued:
    Packets              :              4846580                 3934 pps
    Bytes                :            222942680              1447768 bps
  Transmitted:
    Packets              :              4846580                 3934 pps
    Bytes                :            222942680              1447768 bps
    Tail-dropped packets :                    0                    0 pps
    RED-dropped packets  :                    0                    0 pps
     Low                 :                    0                    0 pps
     Medium-low          :                    0                    0 pps
     Medium-high         :                    0                    0 pps
     High                :                    0                    0 pps
    RED-dropped bytes    :                    0                    0 bps
     Low                 :                    0                    0 bps
     Medium-low          :                    0                    0 bps
     Medium-high         :                    0                    0 bps
     High                :                    0                    0 bps
Queue: 3, Forwarding classes: network-control
  Queued:
    Packets              :                    0                    0 pps
    Bytes                :                    0                    0 bps
  Transmitted:
    Packets              :                    0                    0 pps
    Bytes                :                    0                    0 bps
    Tail-dropped packets :                    0                    0 pps
    RED-dropped packets  :                    0                    0 pps
     Low                 :                    0                    0 pps
     Medium-low          :                    0                    0 pps
     Medium-high         :                    0                    0 pps
     High                :                    0                    0 pps
    RED-dropped bytes    :                    0                    0 bps
     Low                 :                    0                    0 bps
     Medium-low          :                    0                    0 bps
     Medium-high         :                    0                    0 bps
     High                :                    0                    0 bps
```

show interfaces queue (Gigabit Ethernet IQ2 PIC)

```
user@host> show interfaces queue ge-7/1/3
```

```
Physical interface: ge-7/1/3, Enabled, Physical link is Up
  Interface index: 170, SNMP ifIndex: 70 Forwarding classes: 16 supported, 4 in
use Ingress queues: 4 supported, 4 in use
Queue: 0, Forwarding classes: best-effort
```


Copyright © 2018, Juniper Networks, Inc.

```
  Queued:
    Packets              :             418390039                    10 pps
    Bytes                :           38910269752                  7440 bps
  Transmitted:
    Packets              :             418390039                    10 pps
    Bytes                :           38910269752                  7440 bps
    Tail-dropped packets : Not Available
    RED-dropped packets  :                     0                     0 pps
    RED-dropped bytes    :                     0                     0 bps
Queue: 1, Forwarding classes: expedited-forwarding
  Queued:
    Packets              :                     0                     0 pps
    Bytes                :                     0                     0 bps
  Transmitted:
    Packets              :                     0                     0 pps
    Bytes                :                     0                     0 bps
    Tail-dropped packets : Not Available
    RED-dropped packets  :                     0                     0 pps
    RED-dropped bytes    :                     0                     0 bps
Queue: 2, Forwarding classes: assured-forwarding
  Queued:
    Packets              :                     0                     0 pps
    Bytes                :                     0                     0 bps
  Transmitted:
    Packets              :                     0                     0 pps
    Bytes                :                     0                     0 bps
    Tail-dropped packets : Not Available
    RED-dropped packets  :                     0                     0 pps
    RED-dropped bytes    :                     0                     0 bps
Queue: 3, Forwarding classes: network-control
  Queued:
    Packets              :                  7055                     1 pps
    Bytes                :                451552                   512 bps
  Transmitted:
    Packets              :                  7055                     1 pps
    Bytes                :                451552                   512 bps
    Tail-dropped packets : Not Available
    RED-dropped packets  :                     0                     0 pps
    RED-dropped bytes    :                     0                     0 bps
Forwarding classes: 16 supported, 4 in use Egress queues: 4 supported, 4 in use
Queue: 0, Forwarding classes: best-effort
  Queued:
    Packets              :                  1031                     0 pps
    Bytes                :                143292                     0 bps
  Transmitted:
    Packets              :                  1031                     0 pps
    Bytes                :                143292                     0 bps
    Tail-dropped packets : Not Available
    RL-dropped packets   :                     0                     0 pps
    RL-dropped bytes     :                     0                     0 bps
    RED-dropped packets  :                     0                     0 pps
    RED-dropped bytes    :                     0                     0 bps
Queue: 1, Forwarding classes: expedited-forwarding
  Queued:
    Packets              :                     0                     0 pps
    Bytes                :                     0                     0 bps
  Transmitted:
    Packets              :                     0                     0 pps
    Bytes                :                     0                     0 bps
    Tail-dropped packets : Not Available
```

```
    RL-dropped packets   :                     0                     0 pps
    RL-dropped bytes     :                     0                     0 bps
    RED-dropped packets  :                     0                     0 pps
    RED-dropped bytes    :                     0                     0 bps
Queue: 2, Forwarding classes: assured-forwarding
  Queued:
    Packets              :                     0                     0 pps
    Bytes                :                     0                     0 bps
  Transmitted:
    Packets              :                     0                     0 pps
    Bytes                :                     0                     0 bps
    Tail-dropped packets : Not Available
    RL-dropped packets   :                     0                     0 pps
    RL-dropped bytes     :                     0                     0 bps
    RED-dropped packets  :                     0                     0 pps
    RED-dropped bytes    :                     0                     0 bps
Queue: 3, Forwarding classes: network-control
  Queued:
    Packets              :                 77009                    11 pps
    Bytes                :               6894286                  7888 bps
  Transmitted:
    Packets              :                 77009                    11 pps
    Bytes                :               6894286                  7888 bps
    Tail-dropped packets : Not Available
    RL-dropped packets   :                     0                     0 pps
    RL-dropped bytes     :                     0                     0 bps
    RED-dropped packets  :                     0                     0 pps
    RED-dropped bytes    :                     0                     0 bps

Packet Forwarding Engine Chassis Queues:
Queues: 4 supported, 4 in use
Queue: 0, Forwarding classes: best-effort
  Queued:
    Packets              :                  1031                     0 pps
    Bytes                :                147328                     0 bps
  Transmitted:
    Packets              :                  1031                     0 pps
    Bytes                :                147328                     0 bps
    Tail-dropped packets :                     0                     0 pps
    RED-dropped packets  :                     0                     0 pps
     Low, non-TCP        :                     0                     0 pps
     Low, TCP            :                     0                     0 pps
     High, non-TCP       :                     0                     0 pps
     High, TCP           :                     0                     0 pps
    RED-dropped bytes    :                     0                     0 bps
     Low, non-TCP        :                     0                     0 bps
     Low, TCP            :                     0                     0 bps
     High, non-TCP       :                     0                     0 bps
     High, TCP           :                     0                     0 bps
Queue: 1, Forwarding classes: expedited-forwarding
  Queued:
    Packets              :                     0                     0 pps
    Bytes                :                     0                     0 bps
  Transmitted:
    Packets              :                     0                     0 pps
    Bytes                :                     0                     0 bps
    Tail-dropped packets :                     0                     0 pps
    RED-dropped packets  :                     0                     0 pps
     Low, non-TCP        :                     0                     0 pps
     Low, TCP            :                     0                     0 pps
```


Copyright © 2018, Juniper Networks, Inc.

```
     High, non-TCP       :                    0                    0 pps
     High, TCP           :                    0                    0 pps
    RED-dropped bytes    :                    0                    0 bps
     Low, non-TCP        :                    0                    0 bps
     Low, TCP            :                    0                    0 bps
     High, non-TCP       :                    0                    0 bps
     High, TCP           :                    0                    0 bps
Queue: 2, Forwarding classes: assured-forwarding
  Queued:
    Packets              :                    0                    0 pps
    Bytes                :                    0                    0 bps
  Transmitted:
    Packets              :                    0                    0 pps
    Bytes                :                    0                    0 bps
    Tail-dropped packets :                    0                    0 pps
    RED-dropped packets  :                    0                    0 pps
     Low, non-TCP        :                    0                    0 pps
     Low, TCP            :                    0                    0 pps
     High, non-TCP       :                    0                    0 pps
     High, TCP           :                    0                    0 pps
    RED-dropped bytes    :                    0                    0 bps
     Low, non-TCP        :                    0                    0 bps
     Low, TCP            :                    0                    0 bps
     High, non-TCP       :                    0                    0 bps
     High, TCP           :                    0                    0 bps
Queue: 3, Forwarding classes: network-control
  Queued:
    Packets              :                94386                   12 pps
    Bytes                :             13756799                 9568 bps
  Transmitted:
    Packets              :                94386                   12 pps
    Bytes                :             13756799                 9568 bps
    Tail-dropped packets :                    0                    0 pps
    RED-dropped packets  :                    0                    0 pps
     Low, non-TCP        :                    0                    0 pps
     Low, TCP            :                    0                    0 pps
     High, non-TCP       :                    0                    0 pps
     High, TCP           :                    0                    0 pps
    RED-dropped bytes    :                    0                    0 bps
     Low, non-TCP        :                    0                    0 bps
     Low, TCP            :                    0                    0 bps
     High, non-TCP       :                    0                    0 bps
     High, TCP           :                    0                    0 bps
```

show interfaces queue both-ingress-egress (Gigabit Ethernet IQ2 PIC)

```
user@host> show interfaces queue ge-6/2/0 both-ingress-egress
```

```
Physical interface: ge-6/2/0, Enabled, Physical link is Up
  Interface index: 175, SNMP ifIndex: 121
Forwarding classes: 8 supported, 4 in use
Ingress queues: 4 supported, 4 in use
Queue: 0, Forwarding classes: best-effort
  Queued:
    Packets              : Not Available
    Bytes                :                    0                    0 bps
  Transmitted:
    Packets              :                  254                    0 pps
    Bytes                :                16274                    0 bps
```

```
    Tail-dropped packets : Not Available
    RED-dropped packets  :                     0                     0 pps
    RED-dropped bytes    :                     0                     0 bps
Queue: 1, Forwarding classes: expedited-forwarding
  Queued:
    Packets              : Not Available
    Bytes                :                     0                     0 bps
  Transmitted:
    Packets              :                     0                     0 pps
    Bytes                :                     0                     0 bps
    Tail-dropped packets : Not Available
    RED-dropped packets  :                     0                     0 pps
    RED-dropped bytes    :                     0                     0 bps
Queue: 2, Forwarding classes: assured-forwarding
  Queued:
    Packets              : Not Available
    Bytes                :                     0                     0 bps
  Transmitted:
    Packets              :                     0                     0 pps
    Bytes                :                     0                     0 bps
    Tail-dropped packets : Not Available
    RED-dropped packets  :                     0                     0 pps
    RED-dropped bytes    :                     0                     0 bps
Queue: 3, Forwarding classes: network-control
  Queued:
    Packets              : Not Available
    Bytes                :                     0                     0 bps
  Transmitted:
    Packets              :                     0                     0 pps
    Bytes                :                     0                     0 bps
    Tail-dropped packets : Not Available
    RED-dropped packets  :                     0                     0 pps
    RED-dropped bytes    :                     0                     0 bps
Forwarding classes: 8 supported, 4 in use
Egress queues: 4 supported, 4 in use
Queue: 0, Forwarding classes: best-effort
  Queued:
    Packets              : Not Available
    Bytes                :                     0                     0 bps
  Transmitted:
    Packets              :                     3                     0 pps
    Bytes                :                   126                     0 bps
    Tail-dropped packets : Not Available
    RED-dropped packets  :                     0                     0 pps
    RED-dropped bytes    :                     0                     0 bps
Queue: 1, Forwarding classes: expedited-forwarding
  Queued:
    Packets              : Not Available
    Bytes                :                     0                     0 bps
  Transmitted:
    Packets              :                     0                     0 pps
    Bytes                :                     0                     0 bps
    Tail-dropped packets : Not Available
    RED-dropped packets  :                     0                     0 pps
    RED-dropped bytes    :                     0                     0 bps
Queue: 2, Forwarding classes: assured-forwarding
  Queued:
    Packets              : Not Available
    Bytes                :                     0                     0 bps
  Transmitted:
```


Copyright © 2018, Juniper Networks, Inc.

```
    Packets              :                    0                    0 pps
    Bytes                :                    0                    0 bps
    Tail-dropped packets : Not Available
    RED-dropped packets  :                    0                    0 pps
    RED-dropped bytes    :                    0                    0 bps
Queue: 3, Forwarding classes: network-control
  Queued:
    Packets              : Not Available
    Bytes                :                    0                    0 bps
  Transmitted:
    Packets              :                    0                    0 pps
    Bytes                :                    0                    0 bps
    Tail-dropped packets : Not Available
    RED-dropped packets  :                    0                    0 pps
    RED-dropped bytes    :                    0                    0 bps
Packet Forwarding Engine Chassis Queues:
Queues: 4 supported, 4 in use
Queue: 0, Forwarding classes: best-effort
  Queued:
    Packets              :             80564692                    0 pps
    Bytes                :           3383717100                    0 bps
  Transmitted:
    Packets              :             80564692                    0 pps
    Bytes                :           3383717100                    0 bps
    Tail-dropped packets :                    0                    0 pps
    RED-dropped packets  :                    0                    0 pps
    RED-dropped bytes    :                    0                    0 bps
Queue: 1, Forwarding classes: expedited-forwarding
  Queued:
    Packets              :             80564685                    0 pps
    Bytes                :           3383716770                    0 bps
  Transmitted:
    Packets              :             80564685                    0 pps
    Bytes                :           3383716770                    0 bps
    Tail-dropped packets :                    0                    0 pps
    RED-dropped packets  :                    0                    0 pps
    RED-dropped bytes    :                    0                    0 bps
Queue: 2, Forwarding classes: assured-forwarding
  Queued:
    Packets              :                    0                    0 pps
    Bytes                :                    0                    0 bps
  Transmitted:
    Packets              :                    0                    0 pps
    Bytes                :                    0                    0 bps
    Tail-dropped packets :                    0                    0 pps
    RED-dropped packets  :                    0                    0 pps
    RED-dropped bytes    :                    0                    0 bps
Queue: 3, Forwarding classes: network-control
  Queued:
    Packets              :                 9397                    0 pps
    Bytes                :              3809052                  232 bps
  Transmitted:
    Packets              :                 9397                    0 pps
    Bytes                :              3809052                  232 bps
    Tail-dropped packets :                    0                    0 pps
    RED-dropped packets  :                    0                    0 pps
    RED-dropped bytes    :                    0                    0 bps
```

show interfaces queue ingress (Gigabit Ethernet IQ2 PIC)

```
user@host> show interfaces queue ge-6/2/0 ingress
Physical interface: ge-6/2/0, Enabled, Physical link is Up
  Interface index: 175, SNMP ifIndex: 121
Forwarding classes: 8 supported, 4 in use
Ingress queues: 4 supported, 4 in use
Queue: 0, Forwarding classes: best-effort
  Queued:
    Packets              : Not Available
    Bytes                :                    0                    0 bps
  Transmitted:
    Packets              :                  288                    0 pps
    Bytes                :                18450                    0 bps
    Tail-dropped packets : Not Available
    RED-dropped packets  :                    0                    0 pps
    RED-dropped bytes    :                    0                    0 bps
Queue: 1, Forwarding classes: expedited-forwarding
  Queued:
    Packets              : Not Available
    Bytes                :                    0                    0 bps
  Transmitted:
    Packets              :                    0                    0 pps
    Bytes                :                    0                    0 bps
    Tail-dropped packets : Not Available
    RED-dropped packets  :                    0                    0 pps
    RED-dropped bytes    :                    0                    0 bps
Queue: 2, Forwarding classes: assured-forwarding
  Queued:
    Packets              : Not Available
    Bytes                :                    0                    0 bps
  Transmitted:
    Packets              :                    0                    0 pps
    Bytes                :                    0                    0 bps
    Tail-dropped packets : Not Available
    RED-dropped packets  :                    0                    0 pps
    RED-dropped bytes    :                    0                    0 bps
Queue: 3, Forwarding classes: network-control
  Queued:
    Packets              : Not Available
    Bytes                :                    0                    0 bps
  Transmitted:
    Packets              :                    0                    0 pps
    Bytes                :                    0                    0 bps
    Tail-dropped packets : Not Available
    RED-dropped packets  :                    0                    0 pps
    RED-dropped bytes    :                    0                    0 bps
```

show interfaces queue egress (Gigabit Ethernet IQ2 PIC)

```
user@host> show interfaces queue ge-6/2/0 egress
Physical interface: ge-6/2/0, Enabled, Physical link is Up
  Interface index: 175, SNMP ifIndex: 121
Forwarding classes: 8 supported, 4 in use
Egress queues: 4 supported, 4 in use
Queue: 0, Forwarding classes: best-effort
```


Copyright © 2018, Juniper Networks, Inc.

```
  Queued:
    Packets              : Not Available
    Bytes                :                    0                    0 bps
  Transmitted:
    Packets              :                    3                    0 pps
    Bytes                :                  126                    0 bps
    Tail-dropped packets : Not Available
    RED-dropped packets  :                    0                    0 pps
    RED-dropped bytes    :                    0                    0 bps
Queue: 1, Forwarding classes: expedited-forwarding
  Queued:
    Packets              : Not Available
    Bytes                :                    0                    0 bps
  Transmitted:
    Packets              :                    0                    0 pps
    Bytes                :                    0                    0 bps
    Tail-dropped packets : Not Available
    RED-dropped packets  :                    0                    0 pps
    RED-dropped bytes    :                    0                    0 bps
Queue: 2, Forwarding classes: assured-forwarding
  Queued:
    Packets              : Not Available
    Bytes                :                    0                    0 bps
  Transmitted:
    Packets              :                    0                    0 pps
    Bytes                :                    0                    0 bps
    Tail-dropped packets : Not Available
    RED-dropped packets  :                    0                    0 pps
    RED-dropped bytes    :                    0                    0 bps
Queue: 3, Forwarding classes: network-control
  Queued:
    Packets              : Not Available
    Bytes                :                    0                    0 bps
  Transmitted:
    Packets              :                    0                    0 pps
    Bytes                :                    0                    0 bps
    Tail-dropped packets : Not Available
    RED-dropped packets  :                    0                    0 pps
    RED-dropped bytes    :                    0                    0 bps
Packet Forwarding Engine Chassis Queues:
Queues: 4 supported, 4 in use
Queue: 0, Forwarding classes: best-effort
  Queued:
    Packets              :             80564692                    0 pps
    Bytes                :           3383717100                    0 bps
  Transmitted:
    Packets              :             80564692                    0 pps
    Bytes                :           3383717100                    0 bps
    Tail-dropped packets :                    0                    0 pps
    RED-dropped packets  :                    0                    0 pps
    RED-dropped bytes    :                    0                    0 bps
Queue: 1, Forwarding classes: expedited-forwarding
  Queued:
    Packets              :             80564685                    0 pps
    Bytes                :           3383716770                    0 bps
  Transmitted:
    Packets              :             80564685                    0 pps
    Bytes                :           3383716770                    0 bps
    Tail-dropped packets :                    0                    0 pps
    RED-dropped packets  :                    0                    0 pps
```

```
    RED-dropped bytes    :                    0                    0 bps
Queue: 2, Forwarding classes: assured-forwarding
  Queued:
    Packets              :                    0                    0 pps
    Bytes                :                    0                    0 bps
  Transmitted:
    Packets              :                    0                    0 pps
    Bytes                :                    0                    0 bps
    Tail-dropped packets :                    0                    0 pps
    RED-dropped packets  :                    0                    0 pps
    RED-dropped bytes    :                    0                    0 bps
Queue: 3, Forwarding classes: network-control
  Queued:
    Packets              :                 9538                    0 pps
    Bytes                :              3819840                    0 bps
  Transmitted:
    Packets              :                 9538                    0 pps
    Bytes                :              3819840                    0 bps
    Tail-dropped packets :                    0                    0 pps
    RED-dropped packets  :                    0                    0 pps
    RED-dropped bytes    :                    0                    0 bps
```

show interfaces queue remaining-traffic (Gigabit Ethernet Enhanced DPC)

```
user@host> show interfaces queue ge-2/2/9 remaining-traffic
Physical interface: ge-2/2/9, Enabled, Physical link is Up
  Interface index: 238, SNMP ifIndex: 71
Forwarding classes: 16 supported, 4 in use
Ingress queues: 4 supported, 4 in use
Queue: 0, Forwarding classes: best-effort
  Queued:
    Packets              :            110208969               472875 pps
    Bytes                :           5951284434            204282000 bps
  Transmitted:
    Packets              :            110208969               472875 pps
    Bytes                :           5951284434            204282000 bps
    Tail-dropped packets : Not Available
    RED-dropped packets  :                    0                    0 pps
     Low                 :                    0                    0 pps
     Medium-low          :                    0                    0 pps
     Medium-high         :                    0                    0 pps
     High                :                    0                    0 pps
    RED-dropped bytes    :                    0                    0 bps
     Low                 :                    0                    0 bps
     Medium-low          :                    0                    0 bps
     Medium-high         :                    0                    0 bps
     High                :                    0                    0 bps
Queue: 1, Forwarding classes: expedited-forwarding
  Queued:
    Packets              :                    0                    0 pps
    Bytes                :                    0                    0 bps
  Transmitted:
    Packets              :                    0                    0 pps
    Bytes                :                    0                    0 bps
    Tail-dropped packets : Not Available
    RED-dropped packets  :                    0                    0 pps
     Low                 :                    0                    0 pps
     Medium-low          :                    0                    0 pps
```


Copyright © 2018, Juniper Networks, Inc.

```
     Medium-high         :                    0                    0 pps
     High                :                    0                    0 pps
    RED-dropped bytes    :                    0                    0 bps
     Low                 :                    0                    0 bps
     Medium-low          :                    0                    0 bps
     Medium-high         :                    0                    0 bps
     High                :                    0                    0 bps
Queue: 2, Forwarding classes: assured-forwarding
  Queued:
    Packets              :                    0                    0 pps
    Bytes                :                    0                    0 bps
  Transmitted:
    Packets              :                    0                    0 pps
    Bytes                :                    0                    0 bps
    Tail-dropped packets : Not Available
    RED-dropped packets  :                    0                    0 pps
     Low                 :                    0                    0 pps
     Medium-low          :                    0                    0 pps
     Medium-high         :                    0                    0 pps
     High                :                    0                    0 pps
    RED-dropped bytes    :                    0                    0 bps
     Low                 :                    0                    0 bps
     Medium-low          :                    0                    0 bps
     Medium-high         :                    0                    0 bps
     High                :                    0                    0 bps
Queue: 3, Forwarding classes: network-control
  Queued:
    Packets              :                    0                    0 pps
    Bytes                :                    0                    0 bps
  Transmitted:
    Packets              :                    0                    0 pps
    Bytes                :                    0                    0 bps
    Tail-dropped packets : Not Available
    RED-dropped packets  :                    0                    0 pps
     Low                 :                    0                    0 pps
     Medium-low          :                    0                    0 pps
     Medium-high         :                    0                    0 pps
     High                :                    0                    0 pps
    RED-dropped bytes    :                    0                    0 bps
     Low                 :                    0                    0 bps
     Medium-low          :                    0                    0 bps
     Medium-high         :                    0                    0 bps
     High                :                    0                    0 bps
Forwarding classes: 16 supported, 4 in use
Egress queues: 4 supported, 4 in use
Queue: 0, Forwarding classes: best-effort
  Queued:
    Packets              :            109355853               471736 pps
    Bytes                :           7436199152            256627968 bps
  Transmitted:
    Packets              :            109355852               471736 pps
    Bytes                :           7436198640            256627968 bps
    Tail-dropped packets : Not Available
    RED-dropped packets  :                    0                    0 pps
     Low                 :                    0                    0 pps
     Medium-low          :                    0                    0 pps
     Medium-high         :                    0                    0 pps
     High                :                    0                    0 pps
    RED-dropped bytes    :                    0                    0 bps
     Low                 :                    0                    0 bps
```

```
     Medium-low          :                    0                    0 bps
     Medium-high         :                    0                    0 bps
     High                :                    0                    0 bps
Queue: 1, Forwarding classes: expedited-forwarding
  Queued:
    Packets              :                    0                    0 pps
    Bytes                :                    0                    0 bps
  Transmitted:
    Packets              :                    0                    0 pps
    Bytes                :                    0                    0 bps
    Tail-dropped packets : Not Available
    RED-dropped packets  :                    0                    0 pps
     Low                 :                    0                    0 pps
     Medium-low          :                    0                    0 pps
     Medium-high         :                    0                    0 pps
     High                :                    0                    0 pps
    RED-dropped bytes    :                    0                    0 bps
     Low                 :                    0                    0 bps
     Medium-low          :                    0                    0 bps
     Medium-high         :                    0                    0 bps
     High                :                    0                    0 bps
Queue: 2, Forwarding classes: assured-forwarding
  Queued:
    Packets              :                    0                    0 pps
    Bytes                :                    0                    0 bps
  Transmitted:
    Packets              :                    0                    0 pps
    Bytes                :                    0                    0 bps
    Tail-dropped packets : Not Available
    RED-dropped packets  :                    0                    0 pps
     Low                 :                    0                    0 pps
     Medium-low          :                    0                    0 pps
     Medium-high         :                    0                    0 pps
     High                :                    0                    0 pps
    RED-dropped bytes    :                    0                    0 bps
     Low                 :                    0                    0 bps
     Medium-low          :                    0                    0 bps
     Medium-high         :                    0                    0 bps
     High                :                    0                    0 bps
Queue: 3, Forwarding classes: network-control
  Queued:
    Packets              :                    0                    0 pps
    Bytes                :                    0                    0 bps
  Transmitted:
    Packets              :                    0                    0 pps
    Bytes                :                    0                    0 bps
    Tail-dropped packets : Not Available
    RED-dropped packets  :                    0                    0 pps
     Low                 :                    0                    0 pps
     Medium-low          :                    0                    0 pps
     Medium-high         :                    0                    0 pps
     High                :                    0                    0 pps
    RED-dropped bytes    :                    0                    0 bps
     Low                 :                    0                    0 bps
     Medium-low          :                    0                    0 bps
     Medium-high         :                    0                    0 bps
     High                :                    0                    0 bps
```


Copyright © 2018, Juniper Networks, Inc.

show interfaces queue (Channelized OC12 IQE Type 3 PIC in SONET Mode)

```
user@host> show interfaces queue t3-1/1/0:7
Physical interface: t3-1/1/0:7, Enabled, Physical link is Up

  Interface index: 192, SNMP ifIndex: 1948

  Description: full T3 interface connect to 6ce13 t3-3/1/0:7 for FR testing -
Lam

Forwarding classes: 16 supported, 9 in use

Egress queues: 8 supported, 8 in use

Queue: 0, Forwarding classes: DEFAULT

  Queued:

    Packets              :                214886                 13449 pps

    Bytes                :               9884756               5164536 bps

  Transmitted:

    Packets              :                214886                 13449 pps

    Bytes                :               9884756               5164536 bps

    Tail-dropped packets :                     0                     0 pps

    RED-dropped packets  :                     0                     0 pps

     Low                 :                     0                     0 pps

     Medium-low          :                     0                     0 pps

     Medium-high         :                     0                     0 pps

     High                :                     0                     0 pps

    RED-dropped bytes    :                     0                     0 bps

     Low                 :                     0                     0 bps

     Medium-low          :                     0                     0 bps

     Medium-high         :                     0                     0 bps

     High                :                     0                     0 bps

Queue: 1, Forwarding classes: REALTIME

  Queued:

    Packets              :                     0                     0 pps

    Bytes                :                     0                     0 bps

  Transmitted:
```

```
    Packets              :                    0                    0 pps
    Bytes                :                    0                    0 bps
    Tail-dropped packets :                    0                    0 pps
    RED-dropped packets  :                    0                    0 pps
     Low                 :                    0                    0 pps
     Medium-low          :                    0                    0 pps
     Medium-high         :                    0                    0 pps
     High                :                    0                    0 pps
    RED-dropped bytes    :                    0                    0 bps
     Low                 :                    0                    0 bps
     Medium-low          :                    0                    0 bps
     Medium-high         :                    0                    0 bps
     High                :                    0                    0 bps
Queue: 2, Forwarding classes: PRIVATE
  Queued:
    Packets              :                    0                    0 pps
    Bytes                :                    0                    0 bps
  Transmitted:
    Packets              :                    0                    0 pps
    Bytes                :                    0                    0 bps
    Tail-dropped packets :                    0                    0 pps
    RED-dropped packets  :                    0                    0 pps
     Low                 :                    0                    0 pps
     Medium-low          :                    0                    0 pps
     Medium-high         :                    0                    0 pps
     High                :                    0                    0 pps
    RED-dropped bytes    :                    0                    0 bps
     Low                 :                    0                    0 bps
     Medium-low          :                    0                    0 bps
     Medium-high         :                    0                    0 bps
```


Copyright © 2018, Juniper Networks, Inc.

```
     High                :                    0                    0 bps
Queue: 3, Forwarding classes: CONTROL
  Queued:
    Packets              :                   60                    0 pps
    Bytes                :                 4560                    0 bps
  Transmitted:
    Packets              :                   60                    0 pps
    Bytes                :                 4560                    0 bps
    Tail-dropped packets :                    0                    0 pps
    RED-dropped packets  :                    0                    0 pps
     Low                 :                    0                    0 pps
     Medium-low          :                    0                    0 pps
     Medium-high         :                    0                    0 pps
     High                :                    0                    0 pps
    RED-dropped bytes    :                    0                    0 bps
     Low                 :                    0                    0 bps
     Medium-low          :                    0                    0 bps
     Medium-high         :                    0                    0 bps
     High                :                    0                    0 bps
Queue: 4, Forwarding classes: CLASS_B_OUTPUT
  Queued:
    Packets              :                    0                    0 pps
    Bytes                :                    0                    0 bps
  Transmitted:
    Packets              :                    0                    0 pps
    Bytes                :                    0                    0 bps
    Tail-dropped packets :                    0                    0 pps
    RED-dropped packets  :                    0                    0 pps
     Low                 :                    0                    0 pps
     Medium-low          :                    0                    0 pps
```

```
     Medium-high         :                    0                    0 pps
     High                :                    0                    0 pps
    RED-dropped bytes    :                    0                    0 bps
     Low                 :                    0                    0 bps
     Medium-low          :                    0                    0 bps
     Medium-high         :                    0                    0 bps
     High                :                    0                    0 bps
Queue: 5, Forwarding classes: CLASS_C_OUTPUT
  Queued:
    Packets              :                    0                    0 pps
    Bytes                :                    0                    0 bps
  Transmitted:
    Packets              :                    0                    0 pps
    Bytes                :                    0                    0 bps
    Tail-dropped packets :                    0                    0 pps
    RED-dropped packets  :                    0                    0 pps
     Low                 :                    0                    0 pps
     Medium-low          :                    0                    0 pps
     Medium-high         :                    0                    0 pps
     High                :                    0                    0 pps
    RED-dropped bytes    :                    0                    0 bps
     Low                 :                    0                    0 bps
     Medium-low          :                    0                    0 bps
     Medium-high         :                    0                    0 bps
     High                :                    0                    0 bps
Queue: 6, Forwarding classes: CLASS_V_OUTPUT
  Queued:
    Packets              :                    0                    0 pps
    Bytes                :                    0                    0 bps
  Transmitted:
```


Copyright © 2018, Juniper Networks, Inc.

```
    Packets              :                    0                    0 pps
    Bytes                :                    0                    0 bps
    Tail-dropped packets :                    0                    0 pps
    RED-dropped packets  :                    0                    0 pps
     Low                 :                    0                    0 pps
     Medium-low          :                    0                    0 pps
     Medium-high         :                    0                    0 pps
     High                :                    0                    0 pps
    RED-dropped bytes    :                    0                    0 bps
     Low                 :                    0                    0 bps
     Medium-low          :                    0                    0 bps
     Medium-high         :                    0                    0 bps
     High                :                    0                    0 bps
Queue: 7, Forwarding classes: CLASS_S_OUTPUT, GETS
  Queued:
    Packets              :                    0                    0 pps
    Bytes                :                    0                    0 bps
  Transmitted:
    Packets              :                    0                    0 pps
    Bytes                :                    0                    0 bps
    Tail-dropped packets :                    0                    0 pps
    RED-dropped packets  :                    0                    0 pps
     Low                 :                    0                    0 pps
     Medium-low          :                    0                    0 pps
     Medium-high         :                    0                    0 pps
     High                :                    0                    0 pps
    RED-dropped bytes    :                    0                    0 bps
     Low                 :                    0                    0 bps
     Medium-low          :                    0                    0 bps
     Medium-high         :                    0                    0 bps
```

```
     High                :                    0                    0 bps


Packet Forwarding Engine Chassis Queues:

Queues: 8 supported, 8 in use

Queue: 0, Forwarding classes: DEFAULT

  Queued:

    Packets              :                371365                23620 pps

    Bytes                :              15597330              7936368 bps

  Transmitted:

    Packets              :                371365                23620 pps

    Bytes                :              15597330              7936368 bps

    Tail-dropped packets :                    0                    0 pps

    RED-dropped packets  :                    0                    0 pps

     Low                 :                    0                    0 pps

     Medium-low          :                    0                    0 pps

     Medium-high         :                    0                    0 pps

     High                :                    0                    0 pps

    RED-dropped bytes    :                    0                    0 bps

     Low                 :                    0                    0 bps

     Medium-low          :                    0                    0 bps

     Medium-high         :                    0                    0 bps

     High                :                    0                    0 bps

Queue: 1, Forwarding classes: REALTIME

  Queued:

    Packets              :                    0                    0 pps

    Bytes                :                    0                    0 bps

  Transmitted:

    Packets              :                    0                    0 pps

    Bytes                :                    0                    0 bps

    Tail-dropped packets :                    0                    0 pps
```


Copyright © 2018, Juniper Networks, Inc.

```
    RED-dropped packets  :                    0                    0 pps
     Low                 :                    0                    0 pps
     Medium-low          :                    0                    0 pps
     Medium-high         :                    0                    0 pps
     High                :                    0                    0 pps
    RED-dropped bytes    :                    0                    0 bps
     Low                 :                    0                    0 bps
     Medium-low          :                    0                    0 bps
     Medium-high         :                    0                    0 bps
     High                :                    0                    0 bps
Queue: 2, Forwarding classes: PRIVATE
  Queued:
    Packets              :                    0                    0 pps
    Bytes                :                    0                    0 bps
  Transmitted:
    Packets              :                    0                    0 pps
    Bytes                :                    0                    0 bps
    Tail-dropped packets :                    0                    0 pps
    RED-dropped packets  :                    0                    0 pps
     Low                 :                    0                    0 pps
     Medium-low          :                    0                    0 pps
     Medium-high         :                    0                    0 pps
     High                :                    0                    0 pps
    RED-dropped bytes    :                    0                    0 bps
     Low                 :                    0                    0 bps
     Medium-low          :                    0                    0 bps
     Medium-high         :                    0                    0 bps
     High                :                    0                    0 bps
Queue: 3, Forwarding classes: CONTROL
  Queued:
```

```
    Packets              :                 32843                     0 pps
    Bytes                :               2641754                    56 bps
  Transmitted:
    Packets              :                 32843                     0 pps
    Bytes                :               2641754                    56 bps
    Tail-dropped packets :                     0                     0 pps
    RED-dropped packets  :                     0                     0 pps
     Low                 :                     0                     0 pps
     Medium-low          :                     0                     0 pps
     Medium-high         :                     0                     0 pps
     High                :                     0                     0 pps
    RED-dropped bytes    :                     0                     0 bps
     Low                 :                     0                     0 bps
     Medium-low          :                     0                     0 bps
     Medium-high         :                     0                     0 bps
     High                :                     0                     0 bps
Queue: 4, Forwarding classes: CLASS_B_OUTPUT
  Queued:
    Packets              :                     0                     0 pps
    Bytes                :                     0                     0 bps
  Transmitted:
    Packets              :                     0                     0 pps
    Bytes                :                     0                     0 bps
    Tail-dropped packets :                     0                     0 pps
    RED-dropped packets  :                     0                     0 pps
     Low                 :                     0                     0 pps
     Medium-low          :                     0                     0 pps
     Medium-high         :                     0                     0 pps
     High                :                     0                     0 pps
    RED-dropped bytes    :                     0                     0 bps
```


Copyright © 2018, Juniper Networks, Inc.

```
     Low                 :                    0                    0 bps
     Medium-low          :                    0                    0 bps
     Medium-high         :                    0                    0 bps
     High                :                    0                    0 bps
Queue: 5, Forwarding classes: CLASS_C_OUTPUT
  Queued:
    Packets              :                    0                    0 pps
    Bytes                :                    0                    0 bps
  Transmitted:
    Packets              :                    0                    0 pps
    Bytes                :                    0                    0 bps
    Tail-dropped packets :                    0                    0 pps
    RED-dropped packets  :                    0                    0 pps
     Low                 :                    0                    0 pps
     Medium-low          :                    0                    0 pps
     Medium-high         :                    0                    0 pps
     High                :                    0                    0 pps
    RED-dropped bytes    :                    0                    0 bps
     Low                 :                    0                    0 bps
     Medium-low          :                    0                    0 bps
     Medium-high         :                    0                    0 bps
     High                :                    0                    0 bps
Queue: 6, Forwarding classes: CLASS_V_OUTPUT
  Queued:
    Packets              :                    0                    0 pps
    Bytes                :                    0                    0 bps
  Transmitted:
    Packets              :                    0                    0 pps
    Bytes                :                    0                    0 bps
    Tail-dropped packets :                    0                    0 pps
```

```
    RED-dropped packets  :                    0                    0 pps
     Low                 :                    0                    0 pps
     Medium-low          :                    0                    0 pps
     Medium-high         :                    0                    0 pps
     High                :                    0                    0 pps
    RED-dropped bytes    :                    0                    0 bps
     Low                 :                    0                    0 bps
     Medium-low          :                    0                    0 bps
     Medium-high         :                    0                    0 bps
     High                :                    0                    0 bps
Queue: 7, Forwarding classes: CLASS_S_OUTPUT, GETS
  Queued:
    Packets              :                    0                    0 pps
    Bytes                :                    0                    0 bps
  Transmitted:
    Packets              :                    0                    0 pps
    Bytes                :                    0                    0 bps
    Tail-dropped packets :                    0                    0 pps
    RED-dropped packets  :                    0                    0 pps
     Low                 :                    0                    0 pps
     Medium-low          :                    0                    0 pps
     Medium-high         :                    0                    0 pps
     High                :                    0                    0 pps
    RED-dropped bytes    :                    0                    0 bps
     Low                 :                    0                    0 bps
     Medium-low          :                    0                    0 bps
     Medium-high         :                    0                    0 bps
     High                :                    0                    0 bps
```


Copyright © 2018, Juniper Networks, Inc.

show interfaces queue (QFX Series)

```
user@switch> show interfaces queue xe-0/0/15
   Physical interface: xe-0/0/15, Enabled, Physical link is Up
     Interface index: 49165, SNMP ifIndex: 539
   Forwarding classes: 12 supported, 8 in use
   Egress queues: 12 supported, 8 in use
   Queue: 0, Forwarding classes: best-effort
     Queued:
       Packets              :                     0                     0 pps
       Bytes                :                     0                     0 bps
     Transmitted:
       Packets              :                     0                     0 pps
       Bytes                :                     0                     0 bps
       Tail-dropped packets : Not Available
       Total-dropped packets:                     0                     0 pps
       Total-dropped bytes  :                     0                     0 bps
   Queue: 3, Forwarding classes: fcoe
     Queued:
       Packets              :                     0                     0 pps
       Bytes                :                     0                     0 bps
     Transmitted:
       Packets              :                     0                     0 pps
       Bytes                :                     0                     0 bps
       Tail-dropped packets : Not Available
       Total-dropped packets:                     0                     0 pps
       Total-dropped bytes  :                     0                     0 bps
0 bps
   Queue: 4, Forwarding classes: no-loss
     Queued:
       Packets              :                     0                     0 pps
       Bytes                :                     0                     0 bps
     Transmitted:
       Packets              :                     0                     0 pps
       Bytes                :                     0                     0 bps
       Tail-dropped packets : Not Available
       Total-dropped packets:                     0                     0 pps
       Total-dropped bytes  :                     0                     0 bps
   Queue: 7, Forwarding classes: network-control
     Queued:
       Packets              :                     0                     0 pps
       Bytes                :                     0                     0 bps
     Transmitted:
       Packets              :                     0                     0 pps
       Bytes                :                     0                     0 bps
       Tail-dropped packets : Not Available
       Total-dropped packets:                     0                     0 pps
       Total-dropped bytes  :                     0                     0 bps
   Queue: 8, Forwarding classes: mcast
     Queued:
       Packets              :                     0                     0 pps
       Bytes                :                     0                     0 bps
     Transmitted:
       Packets              :                     0                     0 pps
       Bytes                :                     0                     0 bps
       Tail-dropped packets : Not Available
       Total-dropped packets:                     0                     0 pps
       Total-dropped bytes  :                     0                     0 bps
```

show interfaces queue l2-statistics (lsq interface)

```
user@switch> show interfaces queue lsq-2/2/0.2 l2-statistics
Logical interface lsq-2/2/0.2 (Index 69) (SNMP ifIndex 1598)
Forwarding classes: 16 supported, 4 in use
Egress queues: 8 supported, 4 in use
Burst size: 0
Queue: 0, Forwarding classes: be
  Queued:
    Packets              :                    1                     0 pps
    Bytes                :                 1001                     0 bps
  Transmitted:
    Packets              :                    5                      0 pps
    Bytes                :                 1062                     0 bps
    Tail-dropped packets :                    0                     0 pps
    RED-dropped packets  :                    0                     0 pps
    RED-dropped bytes    :                    0                     0 bps
Queue: 1, Forwarding classes: ef
  Queued:
    Packets              :                    1                     0 pps
    Bytes                :                 1500                     0 bps
  Transmitted:
    Packets              :                    6                      0 pps
    Bytes                :                 1573                     0 bps
    Tail-dropped packets :                    0                     0 pps
    RED-dropped packets  :                    0                     0 pps
    RED-dropped bytes    :                    0                     0 bps
Queue: 2, Forwarding classes: af
  Queued:
    Packets              :                    1                     0 pps
    Bytes                :                  512                     0 bps
  Transmitted:
    Packets              :                    3                      0 pps
    Bytes                :                  549                     0 bps
    Tail-dropped packets :                    0                     0 pps
    RED-dropped packets  :                    0                     0 pps
    RED-dropped bytes    :                    0                     0 bps
Queue: 3, Forwarding classes: nc
  Queued:
    Packets              :                    0                     0 pps
    Bytes                :                    0                     0 bps
  Transmitted:
    Packets              :                    0                      0 pps
    Bytes                :                    0                     0 bps
    Tail-dropped packets :                    0                     0 pps
    RED-dropped packets  :                    0                     0 pps
    RED-dropped bytes    :                    0                     0 bps
=========
```

show interfaces queue lsq (lsq-ifd)

```
user@switch> show interfaces queue lsq-1/0/0
Logical interface lsq-1/0/0 (Index 348) (SNMP ifIndex 660)
Forwarding classes: 16 supported, 4 in use
Egress queues: 8 supported, 4 in use
Burst size: 0
```


Copyright © 2018, Juniper Networks, Inc.

```
Queue: 0, Forwarding classes: be
  Queued:
    Packets              :                 55576                  1206 pps
    Bytes                :              29622008               5145472 bps
  Transmitted:
    Packets              :                 55576                  1206 pps
    Bytes                :              29622008               5145472 bps
    Tail-dropped packets :                     0                     0 pps
    RL-dropped packets   :                     0                     0 pps
    RL-dropped bytes     :                     0                     0 bps
    RED-dropped packets  :                     0                     0 pps
     Low                 :                     0                     0 pps
     Medium-low          :                     0                     0 pps
     Medium-high         :                     0                     0 pps
     High                :                     0                     0 pps
    RED-dropped bytes    :                     0                     0 bps
     Low                 :                     0                     0 bps
     Medium-low          :                     0                     0 bps
     Medium-high         :                     0                     0 bps
     High                :                     0                     0 bps
Queue: 1, Forwarding classes: ef
  Queued:
    Packets              :                     0                     0 pps
    Bytes                :                     0                     0 bps
  Transmitted:
    Packets              :                     0                     0 pps
    Bytes                :                     0                     0 bps
    Tail-dropped packets :                     0                     0 pps
    RL-dropped packets   :                     0                     0 pps
    RL-dropped bytes     :                     0                     0 bps
    RED-dropped packets  :                     0                     0 pps
     Low                 :                     0                     0 pps
     Medium-low          :                     0                     0 pps
     Medium-high         :                     0                     0 pps
     High                :                     0                     0 pps
    RED-dropped bytes    :                     0                     0 bps
     Low                 :                     0                     0 bps
     Medium-low          :                     0                     0 bps
     Medium-high         :                     0                     0 bps
     High                :                     0                     0 bps
Queue: 2, Forwarding classes: af
  Queued:
    Packets              :                     0                     0 pps
    Bytes                :                     0                     0 bps
  Transmitted:
    Packets              :                     0                     0 pps
    Bytes                :                     0                     0 bps
    Tail-dropped packets :                     0                     0 pps
    RL-dropped packets   :                     0                     0 pps
    RL-dropped bytes     :                     0                     0 bps
    RED-dropped packets  :                     0                     0 pps
     Low                 :                     0                     0 pps
     Medium-low          :                     0                     0 pps
     Medium-high         :                     0                     0 pps
     High                :                     0                     0 pps
    RED-dropped bytes    :                     0                     0 bps
     Low                 :                     0                     0 bps
     Medium-low          :                     0                     0 bps
     Medium-high         :                     0                     0 bps
     High                :                     0                     0 bps
```

```
Queue: 3, Forwarding classes: nc
  Queued:
    Packets              :                 22231                  482 pps
    Bytes                :              11849123              2057600 bps
  Transmitted:
    Packets              :                 22231                  482 pps
    Bytes                :              11849123              2057600 bps
    Tail-dropped packets :                     0                    0 pps
    RL-dropped packets   :                     0                    0 pps
    RL-dropped bytes     :                     0                    0 bps
    RED-dropped packets  :                     0                    0 pps
     Low                 :                     0                    0 pps
     Medium-low          :                     0                    0 pps
     Medium-high         :                     0                    0 pps
     High                :                     0                    0 pps
    RED-dropped bytes    :                     0                    0 bps
     Low                 :                     0                    0 bps
     Medium-low          :                     0                    0 bps
     Medium-high         :                     0                    0 bps
     High                :                     0                    0 bps
```

Sample Output

show interfaces queue (Aggregated Ethernet on a MX series Router)

```
user@host> show interfaces queue ae0 remaining-traffic
```

```
Physical interface: ae0    , Enabled, Physical link is Up
  Interface index: 128, SNMP ifIndex: 543
Forwarding classes: 16 supported, 4 in use
Egress queues: 8 supported, 4 in use
Queue: 0, Forwarding classes: best-effort
  Queued:
    Packets              :                    16                    0 pps
    Bytes                :                  1896                    0 bps
  Transmitted:
    Packets              :                    16                    0 pps
    Bytes                :                  1896                    0 bps
    Tail-dropped packets :                     0                    0 pps
    RL-dropped packets   :                     0                    0 pps
    RL-dropped bytes     :                     0                    0 bps
    RED-dropped packets  :                     0                    0 pps
     Low                 :                     0                    0 pps
     Medium-low          :                     0                    0 pps
     Medium-high         :                     0                    0 pps
     High                :                     0                    0 pps
    RED-dropped bytes    :                     0                    0 bps
     Low                 :                     0                    0 bps
     Medium-low          :                     0                    0 bps
     Medium-high         :                     0                    0 bps
     High                :                     0                    0 bps
  Queue-depth bytes      :
    Average              :                     0
    Current              :                     0
    Peak                 :                     0
    Maximum              :             119013376
Queue: 1, Forwarding classes: expedited-forwarding
  Queued:
    Packets              :                     0                    0 pps
```


Copyright © 2018, Juniper Networks, Inc.

```
    Bytes                :                    0                    0 bps
  Transmitted:
    Packets              :                    0                    0 pps
    Bytes                :                    0                    0 bps
    Tail-dropped packets :                    0                    0 pps
    RL-dropped packets   :                    0                    0 pps
    RL-dropped bytes     :                    0                    0 bps
    RED-dropped packets  :                    0                    0 pps
     Low                 :                    0                    0 pps
     Medium-low          :                    0                    0 pps
     Medium-high         :                    0                    0 pps
     High                :                    0                    0 pps
    RED-dropped bytes    :                    0                    0 bps
     Low                 :                    0                    0 bps
     Medium-low          :                    0                    0 bps
     Medium-high         :                    0                    0 bps
     High                :                    0                    0 bps
  Queue-depth bytes      :
    Average              :                    0
    Current              :                    0
    Peak                 :                    0
    Maximum              :                32768
Queue: 2, Forwarding classes: assured-forwarding
  Queued:
    Packets              :                    0                    0 pps
    Bytes                :                    0                    0 bps
  Transmitted:
    Packets              :                    0                    0 pps
    Bytes                :                    0                    0 bps
    Tail-dropped packets :                    0                    0 pps
    RL-dropped packets   :                    0                    0 pps
    RL-dropped bytes     :                    0                    0 bps
    RED-dropped packets  :                    0                    0 pps
     Low                 :                    0                    0 pps
     Medium-low          :                    0                    0 pps
     Medium-high         :                    0                    0 pps
     High                :                    0                    0 pps
    RED-dropped bytes    :                    0                    0 bps
     Low                 :                    0                    0 bps
     Medium-low          :                    0                    0 bps
     Medium-high         :                    0                    0 bps
     High                :                    0                    0 bps
  Queue-depth bytes      :
    Average              :                    0
    Current              :                    0
    Peak                 :                    0
    Maximum              :                32768
Queue: 3, Forwarding classes: network-control
  Queued:
    Packets              :                    0                    0 pps
    Bytes                :                    0                    0 bps
  Transmitted:
    Packets              :                    0                    0 pps
    Bytes                :                    0                    0 bps
    Tail-dropped packets :                    0                    0 pps
    RL-dropped packets   :                    0                    0 pps
    RL-dropped bytes     :                    0                    0 bps
    RED-dropped packets  :                    0                    0 pps
     Low                 :                    0                    0 pps
     Medium-low          :                    0                    0 pps
```

```
    Medium-high         :                    0                    0 pps
    High                :                    0                    0 pps
   RED-dropped bytes    :                    0                    0 bps
    Low                 :                    0                    0 bps
    Medium-low          :                    0                    0 bps
    Medium-high         :                    0                    0 bps
    High                :                    0                    0 bps
 Queue-depth bytes      :
   Average              :                    0
   Current              :                    0
   Peak                 :                    0
   Maximum              :              6258688
```


Copyright © 2018, Juniper Networks, Inc.

CHAPTER 19

Operational Commands (Interconnect Device Scheduling)

- show class-of-service scheduler-map-forwarding-class-sets

show class-of-service scheduler-map-forwarding-class-sets

Syntax

```
show class-of-service scheduler-map-forwarding-class-sets
<scheduler-map-fcset-name>
```

Release Information

Command introduced in Junos OS Release 13.1R2 for the QFX Series.

Description

Display the mapping of fabric schedulers to fabric fc-sets and a summary of scheduler parameters for each entry on Interconnect devices.

Options

none—Display all fabric scheduler maps.

scheduler-map-fcset-name—(Optional) Display a summary of fabric scheduler parameters for each fabric fc-set to which the specified scheduler is assigned.

Required Privilege Level

view

Related Documentation

- Understanding CoS Scheduling Across the QFabric System on page 276
- Understanding CoS Fabric Forwarding Class Sets on page 330
- Example: Configuring CoS Scheduling Across the QFabric System on page 297

List of Sample Output

show class-of-service scheduler-map-forwarding-class-sets on page 983

Output Fields

Table 178 on page 982 describes the output fields for the **show class-of-service scheduler-map fc-set** command. Output fields are listed in the approximate order in which they appear.

Table 178: show class-of-service scheduler-map-fcset Output Fields

Field Name	Field Description
Scheduler map fcset	Name of the fabric scheduler map.
Index	Internal index of the indicated object. Objects having indexes in this output include fabric scheduler maps, schedulers, and drop profiles.
Scheduler	Name of the scheduler.
Forwarding class set	Name of the fabric forwarding class set (fabric fc-set) mapped to the scheduler.
Transmit rate	Configured transmit rate of the scheduler (percentage). The transmit rate of a fabric scheduler determines the proportion of class group (priority group) bandwidth that the associated fabric fc-set receives. The sum of the fabric fc-set transmit rates in a class group determines the percentage of available port bandwidth allocated to the class group.

Copyright © 2018, Juniper Networks, Inc.

Table 178: show class-of-service scheduler-map-fcset Output Fields (continued)

Field Name	Field Description
Rate Limit	Rate limiting configuration of the queue. Possible values are **none**, meaning no rate limiting, and **exact**, meaning the queue only transmits at the configured rate.
Buffer size	Egress queue buffer size (percentage).
Buffer limit	Buffer limiting configuration of the queue. Possible values are **none**, meaning no buffer limiting, and **exact**, meaning the buffer is limited to the configured buffer size.
Priority	Scheduling priority: **low** or **high** (default value only; value is not user-configurable).
Excess priority	Priority of excess bandwidth: **low**, **medium-low**, **medium-high**, **high**, or **none** (default value only; value is not user-configurable).
Shaping rate	Maximum bandwidth allowed to traffic mapped to the scheduler.
Drop profiles	Table displaying the assignment of drop profiles by name and index to a given loss priority and protocol pair.
Loss priority	Packet loss priority for drop profile assignment.
Protocol	Transport protocol for drop profile assignment.
Name	Name of the drop profile.

Sample Output

show class-of-service scheduler-map-forwarding-class-sets

```
user@host> show class-of-service scheduler-map-forwarding-class-sets
Scheduler map fcset: fab-be-map, Index: 2

  Scheduler: fab-be-sched, Forwarding class set: fabric_fcset_be, Index: 21
    Transmit rate: 25 percent, Rate Limit: none, Buffer size: 25 percent,
    Buffer Limit: none, Priority: low
    Excess Priority: unspecified
    Shaping rate: 100 percent
    Drop profiles:
      Loss priority   Protocol    Index    Name
      Low             any         55387    fab-dp-be-low
      Medium high     any             1    <default-drop-profile>
      High            any          4369    fab-dp-be-high


Scheduler map fcset: fab-fcoe-map, Index: 3

  Scheduler: fab-fcoe-sched, Forwarding class set: fabric_fcset_noloss1, Index:
23
    Transmit rate: 30 percent, Rate Limit: none, Buffer size: 30 percent,
    Buffer Limit: none, Priority: low
    Excess Priority: unspecified
```

```
Shaping rate: 100 percent
Drop profiles:
  Loss priority   Protocol    Index    Name
  Low             any             1    <default-drop-profile>
  Medium high     any             1    <default-drop-profile>
  High            any             1    <default-drop-profile>
```


Copyright © 2018, Juniper Networks, Inc.

CHAPTER 20

Operational Commands (Data Center Bridging and Lossless Transport)

- show class-of-service congestion-notification
- show dcbx
- show dcbx neighbors

Copyright © 2018, Juniper Networks, Inc.

show class-of-service congestion-notification

Syntax

```
show class-of-service congestion-notification <profile-name>
```

Release Information

Command introduced in Junos OS Release 11.1 for the QFX Series.
Output for DSCP values introduced for DSCP-based PFC in Junos OS Release 17.4R1 for the QFX Series.

Description

Display whether priority-based flow control (PFC) is enabled for each IEEE 802.1p code point or for each DSCP value for DSCP-based PFC.

Options

none—Display the PFC state for all IEEE 802.1p code points or DSCP values.

profile-name—Display the PFC state for all IEEE 802.1p code points or DSCP values for the specified congestion notification profile.

Required Privilege Level

view

Related Documentation

- Configuring CoS PFC (Congestion Notification Profiles) on page 429
- Example: Configuring CoS PFC for FCoE Traffic on page 432
- Example: Configuring Lossless FCoE Traffic When the Converged Ethernet Network Does Not Use IEEE 802.1p Priority 3 for FCoE Traffic (FCoE Transit Switch) on page 465
- Example: Configuring Two or More Lossless FCoE Priorities on the Same FCoE Transit Switch Interface on page 474
- Example: Configuring Two or More Lossless FCoE IEEE 802.1p Priorities on Different FCoE Transit Switch Interfaces on page 484
- Example: Configuring Lossless IEEE 802.1p Priorities on Ethernet Interfaces for Multiple Applications (FCoE and iSCSI) on page 500
- *Example: Configuring PFC Across Layer 3 Interfaces*
- Understanding CoS Flow Control (Ethernet PAUSE and PFC) on page 414
- *Understanding PFC Using DSCP at Layer 3 for Untagged Traffic*
- *Configuring DSCP-based PFC for Layer 3 Untagged Traffic*

List of Sample Output

show class-of-service congestion-notification on page 987
show class-of-service congestion-notification (QFX Series with DSCP-based PFC and a specified congestion notification profile) on page 988

Output Fields

Table 179 on page 987 describes the output fields for the **show class-of-service congestion-notification** command. Output fields are listed in the approximate order in which they appear.

Copyright © 2018, Juniper Networks, Inc.

Table 179: show class-of-service congestion-notification Output Fields

Field Name	Field Description
Type	Type of interfaces on which congestion notification is applied. Congestion notification is applied on input interfaces.
Index	Index of this congestion notification profile.
Name	Name of the congestion notification profile.
Cable Length	Length of the attached physical cable in meters. The default value is 100 meters.
Priority	IEEE 802.1p code points, or for DSCP-based PFC, DSCP values.
PFC	State of PFC for the corresponding code point, either **enabled** or **disabled**.
MRU	Maximum receive unit of the interface in bytes. (Incoming traffic that exceeds the MRU size of an interface is dropped.) The default values are: • 2500 bytes for priority 3 traffic • 9216 bytes for priority 4 traffic NOTE: If you configure flow control on a priority that is not one of the default flow control priorities, the default MRU value is 2500 bytes. For example, if you configure flow control on priority 5 and you do not configure an MRU value, the default MRU value is 2500 bytes.
Flow-Control-Queues	Output queue mapping to IEEE 802.1p code points (priorities). Explicit output queue to priority mapping overwrites the default configuration, and only explicitly mapped queues are displayed in the output. Flow control is only enabled on a queue when you enable PFC on the corresponding priority in the input stanza of the congestion notification profile.

Sample Output

show class-of-service congestion-notification

```
user@switch> show class-of-service congestion-notification
Name: fcoe_p3_cnp, Index: 12037
Type: Input
Cable Length: 100 m
  Priority     PFC          MRU
  000          Disabled
  001          Disabled
  010          Disabled
  011          Enabled      2500
  100          Enabled      9216
  101          Disabled
  110          Disabled
  111          Disabled
Type: Output
  Priority     Flow-Control-Queues
  000
               0
  001
               1
```

```
  010
                2
  011
                3
  100
                4
  101
                5
  110
                6
  111
                7

Name: fcoe_p3_p5_cnp, Index: 46484
Type: Input
Cable Length: 100 m
  Priority     PFC          MRU
  000          Disabled
  001          Disabled
  010          Disabled
  011          Enabled      2240
  100          Disabled
  101          Enabled      2240
  110          Disabled
  111          Disabled
Type: Output
  Priority     Flow-Control-Queues
  011
                3
  101
                5
```

Sample Output

show class-of-service congestion-notification (QFX Series with DSCP-based PFC and a specified congestion notification profile)

```
user@switch> show class-of-service congestion-notification dscp_cnp
```

```
Name: dscp_cnp, Index: 13825
Type: Input
Cable Length: 100 m
  Priority     PFC          MRU
  000000       Disabled
  000001       Disabled
  000010       Disabled
  000011       Disabled
  000100       Disabled
  000101       Disabled
  000110       Disabled
  000111       Disabled
  001000       Disabled
  001001       Disabled
  001010       Disabled
  001011       Disabled
  001100       Disabled
  001101       Disabled
  001110       Disabled
  001111       Disabled
```


Copyright © 2018, Juniper Networks, Inc.

```
  010000       Disabled
  010001       Disabled
  010010       Disabled
  010011       Disabled
  010100       Disabled
  010101       Disabled
  010110       Disabled
  010111       Disabled
  011000       Disabled
  011001       Disabled
  011010       Disabled
  011011       Disabled
  011100       Disabled
  011101       Disabled
  011110       Disabled
  011111       Disabled
  100000       Disabled
  100001       Disabled
  100010       Disabled
  100011       Disabled
  100100       Disabled
  100101       Disabled
  100110       Disabled
  100111       Disabled
  101000       Disabled
  101001       Disabled
  101010       Disabled
  101011       Disabled
  101100       Disabled
  101101       Disabled
  101110       Disabled
  101111       Disabled
  110000       Enabled      3000
  110001       Disabled
  110010       Disabled
  110011       Disabled
  110100       Disabled
  110101       Disabled
  110110       Disabled
  110111       Disabled
  111000       Enabled      2000
  111001       Disabled
  111010       Disabled
  111011       Disabled
  111100       Enabled      4000
  111101       Disabled
  111110       Disabled
  111111       Disabled
Type: Output
  Priority     Flow-Control-Queues
  111          1
```

show dcbx

Syntax

show dcbx

Release Information

Command introduced in Junos OS Release 11.3 for the QFX Series.

Description

List DCBX status (enabled or disabled) and the interfaces on which DCBX is enabled.

Required Privilege Level

view

Related Documentation

- show dcbx neighbors on page 991
- Configuring DCBX Autonegotiation on page 543

Output Fields

Table 180 on page 990 lists the output fields for the **show dcbx** command. Output fields are listed in the approximate order in which they appear.

Table 180: show dcbx output fields

Field Name	Field Description
DCBX	Status of DCBX on the switch or for the specified interface: • Enabled—DCBX is enabled on the switch or on the specified interface • Disabled—DCBX is disabled on the switch or on the specified interface
Interface	Name of the interface

Sample Output

show dcbx

```
user@switch> show dcbx
DCBX                    : Enabled
Interface       DCBX
xe-0/0/9.0      enabled
xe-0/0/32.0     enabled
xe-0/0/36.0     enabled
```


Copyright © 2018, Juniper Networks, Inc.

show dcbx neighbors

Syntax

```
show dcbx neighbors
<interface interface-name>
<terse>
```

Release Information

Command introduced in Junos OS Release 11.1 for the QFX Series.
Command introduced in Junos OS Release 11.3 for EX Series switches.

Description

Display information about Data Center Bridging Capability Exchange protocol (DCBX) neighbor interfaces.

Options

none—Display information about all DCBX neighbor interfaces.

interface-name—(Optional) Display information for the specified interface.

terse—Display the specified level of output.

Required Privilege Level

view

Related Documentation

- Configuring DCBX Autonegotiation on page 543
- Example: Configuring DCBX Application Protocol TLV Exchange on page 553
- *Example: Configuring an FCoE Transit Switch*
- *Example: Configuring DCBX to Support an iSCSI Application*
- Understanding DCB Features and Requirements on page 376
- *Understanding Data Center Bridging Capability Exchange Protocol for EX Series Switches*
- *Understanding DCBX on Junos Fusion Data Center*
- dcbx on page 720

List of Sample Output

show dcbx neighbors interface (Junos Fusion Data Center, DCBX Version 1.01 Mode) on page 1006
show dcbx neighbors interface (QFX Series, DCBX Version 1.01 Mode) on page 1010
show dcbx neighbors interface (QFX Series, IEEE DCBX Mode) on page 1011
show dcbx neighbors terse (QFX Series) on page 1014
show dcbx neighbors (EX4500 Switch: FCoE Interfaces on Both Local and Peer with PFC Configured Compatibly) on page 1014
show dcbx neighbors (EX4500 Switch: DCBX Interfaces on Local and Peer Are Configured Compatibly with iSCSI Application) on page 1015
show dcbx neighbors (EX4500 Switch: Includes ETS) on page 1016

Output Fields

Table 181 on page 992 lists the output fields for the **show dcbx neighbors** command. Output fields are listed in the approximate order in which they appear.

Table 181: show dcbx neighbors Output Fields

Field Name	Field Description
Interface	Name of the interface.
Parent Interface	Name of the link aggregation group (LAG) interface to which the DCBX interface belongs.
Active-application-map	Name of the application map applied to the interface.
Protocol-Mode	(QFX Series) DCBX protocol mode the interface uses: • IEEE DCBX Version—The interface uses IEEE DCBX mode. • DCBX Version 1.01—The interface uses DCBX version 1.01. NOTE: On interfaces that use the IEEE DCBX mode, the **show dcbx neighbors interface *interface-name*** operational command does not include application, PFC, or ETS operational state in the output.
Protocol-State	(DCBX Version 1.01 only) DCBX protocol state synchronization status: • **in-sync**—The local interface received an acknowledge message from the peer to indicate that the peer received a state change message sent by the local interface. • **ack-pending**—The local interface has not yet received an acknowledge message from the peer to indicate that the peer received a state change message sent by the local interface.

Copyright © 2018, Juniper Networks, Inc.

Table 181: show dcbx neighbors Output Fields (continued)

Field Name		Field Description
Local-Advertisement		(DCBX Version 1.01 only) Status of advertisements that the local interface sends to the peer.
	Operational version	Version of the DCBX standard used.
	sequence-number	Number of state change messages sent to the peer. If the interface **Protocol-State** value is **in-sync**, this number should match the **acknowledge-id** number in the **Peer-Advertisement** section. If the interface **Protocol-State** value is **ack-pending**, this number does not match the **acknowledge-id** number in the **Peer-Advertisement** section. On Junos Fusion Data Center, this field represents the number of DCBX state changes maintained by an aggregation device, which might differ among the aggregation devices in the system. Satellite devices acting as proxy DCBX peers for the aggregation devices maintain a local sequence number (see **satellite sequence-number** output field) that maps to this value for each aggregation device. In this way, the satellite device presents a consistent sequence number for DCBX TLV traffic to and from the DCBX peer.
	acknowledge-id	Number of acknowledge messages received from the peer. If the **Protocol-State** value is **in-sync**, this number should match the **sequence-number** value in the **Peer-Advertisement** section. If the **Protocol-State** value is **ack-pending**, this number does not match the **sequence-number** value in the **Peer-Advertisement** section. Similar to the **sequence-number** field, this field represents the number of received DCBX acknowledge messages maintained by an aggregation device on Junos Fusion Data Center, which might differ among the aggregation devices in the system. Satellite devices acting as proxy DCBX peers for the aggregation devices map **acknowledge-id** values in received DCBX packets to the equivalent **sequence-number** value actually being acknowledged for each aggregation device.
	satellite sequence-number	

Table 181: show dcbx neighbors Output Fields (continued)

Field Name		Field Description
		(Junos Fusion Data Center only) Count of state change messages to the DCBX peer maintained locally on the Junos Fusion satellite device, as compared to the count maintained on the aggregation device displayed in this section's **sequence-number** output field. Satellite devices act as proxy DCBX peers for the aggregation devices, and map received DCBX **acknowledge-id** values (corresponding to local satellite sequence number values) to the equivalent aggregation device **sequence-number** value being acknowledged for each aggregation device. The **satellite sequence-number** field shows the local satellite device sequence number value actually being exchanged with the DCBX peer.
	peer-chassis sequence-number	(Junos Fusion Data Center, starting in Junos OS Release 17.2R1 up until Junos OS Release 18.1R2-S2) Count of state change messages to the DCBX peer maintained by the other aggregation device in the system, as compared to the **sequence-number** output field in this section. Satellite devices acting as proxy DCBX peers for the aggregation devices map received DCBX **acknowledge-id** values to the equivalent **sequence-number** value being acknowledged for each aggregation device. The **satellite sequence-number** field shows the local satellite device sequence number value actually being exchanged with the DCBX peer. This field is not displayed starting with Junos OS Release 18.1R2-S2 on Junos Fusion Data Center.

Copyright © 2018, Juniper Networks, Inc.

Table 181: show dcbx neighbors Output Fields (continued)

Field Name		Field Description
Peer-Advertisement		(DCBX Version 1.01 only) Status of advertisements that the peer sends to the local interface.
	Operational version	Version of the DCBX standard used.
	sequence-number	Number of state change messages the peer sent to the local interface. If this number matches the **acknowledge-id** number in the **Local-Advertisement** field, this indicates that the local interface has acknowledged all of the peer's state change messages and is synchronized. If this number does not match the **acknowledge-id** number in the **Local-Advertisement** field, this indicates that the peer has not yet received an acknowledgment for a state change message from the local interface.
	acknowledge-id	Number of acknowledge messages the peer has received from the local interface. If this number matches the **sequence-number** value in the **Local-Advertisement** field, this indicates that the peer has acknowledged all of the local interface's state change messages and is in synchronization. If this number does not match the **sequence-number** value in the **Local-Advertisement** field, this indicates that the peer has not yet sent an acknowledgment for a state change message from the local interface.

Table 181: show dcbx neighbors Output Fields (continued)

Field Name			Field Description
Feature: PFC			Priority-based flow control (PFC) feature DCBX state information.
	Protocol-State		(DCBX Version 1.01 only) DCBX protocol state synchronization status: • **ack-pending**—The local interface has not yet received an acknowledge message from the peer to indicate that the peer received a PFC state change message sent by the local interface. • **in-sync**—The local interface received an acknowledge message from the peer to indicate that the peer received a PFC state change message sent by the local interface. • **not-applicable**—PFC autonegotiation is disabled.
	Operational State		(DCBX Version 1.01 only) Operational state of the feature: **enabled** or **disabled**.
	Local-Advertisement		Status of advertisements that the local interface sends to the peer.
		Enable	(DCBX Version 1.01 only) State that the local interface advertises to the peer: • **Yes**—The feature is enabled. • **No**—The feature is disabled.
		Willing	Willingness of the local interface to learn the PFC configuration from the peer using DCBX: • **Yes**—The local interface is willing to learn the PFC configuration from the peer. • **No**—The local interface is not willing to learn the PFC configuration from the peer.
		Mac auth Bypass Capability	(IEEE DCBX only) (QFX Series) Media access controller (MAC) authentication bypass provides access to devices based on MAC address authentication. This is not supported, so the only value seen in the local advertisement field is **no**.
		Error	(DCBX Version 1.01 only) Configuration compatibility error status: • **No**—No error detected. Local and peer configuration are compatible. • **Yes**—Error detected. Local and peer configuration are not compatible.

Copyright © 2018, Juniper Networks, Inc.

Table 181: show dcbx neighbors Output Fields (continued)

Field Name		Field Description
	Operational State	PFC operational state on the interface: • Enabled—PFC is enabled on the interface • Disabled—PFC is disabled on the interface
	Maximum Traffic Classes capable to support PFC	Largest number of traffic classes the local interface supports for PFC: • **6** (EX Series switches) • **6** (QFX Series)
	Code Point	PFC code point, which is specified in the 3-bit class-of-service field in the VLAN header.
	Admin Mode	PFC administrative state for each code point on the local interface: • **Enabled**—PFC is enabled for the code point. • **Disabled**—PFC is disabled for the code point.
	Operational Mode	(QFX Series) PFC operational mode for each code point: • Enable—PFC is enabled on the code point. • Disable—PFC is disabled on the code point.
Peer-Advertisement		Status of advertisements that the peer sends to the local interface.
	Enable	(DCBX Version 1.01 only) State that the peer advertises to the local interface: • **Yes**—The feature is enabled. • **No**—The feature is disabled.
	Willing	Willingness of the peer to learn the PFC configuration from the local interface using DCBX: • **Yes**—The peer is willing to learn the PFC configuration from the local interface. • **No**—The peer is not willing to learn the PFC configuration from the local interface.
	Error	(DCBX Version 1.01 only) Configuration compatibility error status: • **No**—No error detected. Local and peer configuration are compatible. • **Yes**—Error detected. Local and peer configuration are not compatible.

Copyright © 2018, Juniper Networks, Inc.

Table 181: show dcbx neighbors Output Fields (continued)

Field Name		Field Description
	Operational State	PFC operational state on the interface: • Enabled—PFC is enabled on the interface • Disabled—PFC is disabled on the interface
	Mac auth Bypass Capability	(IEEE DCBX only) (QFX Series) Media access controller (MAC) authentication bypass provides access to devices based on MAC address authentication. Although the QFX Series does not support this feature, the connected peer might support it. This field reports the peer state: • **Yes**—The connected peer supports MAC authentication bypass. • **No**—The connected peer does not support MAC authentication bypass.
	Maximum Traffic Classes capable to support PFC	Largest number of traffic classes the peer supports for PFC: • **6** (EX Series switches) • **8** (QFX Series)
	Code Point	PFC code point, which is specified in the 3-bit class-of-service field in the VLAN header.
	Admin Mode	PFC administrative state for each code point on the peer: • **Enabled**—PFC is enabled for the code point. • **Disabled**—PFC is disabled for the code point.

Copyright © 2018, Juniper Networks, Inc.

Table 181: show dcbx neighbors Output Fields (continued)

Field Name			Field Description
Feature: Application			State information for the DCBX application.
	Protocol-State		(DCBX Version 1.01 only) DCBX protocol state synchronization status: • **in-sync**—The local interface received an acknowledge message from the peer to indicate that the peer received an FCoE state change message sent by the local interface. • **ack-pending**—The local interface has not yet received an acknowledge message from the peer to indicate that the peer received an FCoE state change message sent by the local interface. • **not-applicable**—The local interface is set to **no-auto-negotiation** (autonegotiation is disabled). If the interface is associated with an FCoE forwarding class, the interface advertises FCoE capability even if the connected peer does not advertise FCoE capability.
	Local-Advertisement		Status of advertisements that the local interface sends to the peer. If the local interface is set to **no-auto-negotiation** (autonegotiation is disabled), the local advertisement portion of the output is not shown.
		Enable	(DCBX Version 1.01 only) State that the local interface advertises to the peer: • **Yes**—The feature is enabled. • **No**—The feature is disabled.
		Willing	(DCBX Version 1.01 only) Willingness of the local interface to learn the FCoE interface state from the peer using DCBX: • **Yes**—The local interface is willing to learn the FCoE interface state from the peer. • **No**—The local interface is not willing to learn the FCoE interface state from the peer.
		Error	(DCBX Version 1.01 only) Configuration compatibility error status: • **No**—No error detected. The local and peer configuration are compatible. • **Yes**—Error detected. The local and peer configuration are not compatible.
		Appl-Name	Name of the application:

Table 181: show dcbx neighbors Output Fields (continued)

Field Name		Field Description
	Ethernet-Type	(DCBX Version 1.01 only) Ethernet type (EtherType) of the application. For example, **0x8906** indicates the EtherType for the FCoE application. Either the EtherType (for Layer 2 applications) or the Socket Number (for Layer 4 applications) of the application is displayed in the output.
	Socket-Number	Destination port socket number of the application, if applicable. Either the EtherType (for Layer 2 applications) or the Socket Number (for Layer 4 applications) of the application is displayed in the output.
	Priority-Field or **Priority-Map**	Priority assigned to the application. For EX Series switches, the priority of the FCoE application is determined by the PFC congestion notification profile that has been configured and associated with the FCoE interface. For other applications, the priority is based on the application map.
	Status	(DCBX Version 1.01 only) Local status when autonegotiation is enabled: • **Enabled**—The application feature is enabled on both the local interface and the peer interface. (The local configuration and the peer configuration match.) • **Disabled**—The local configuration and the peer configuration do not match. NOTE: If there is a configuration mismatch in one application between the switch and the peer, all the other applications including FCoE are disabled.
Peer-Advertisement		Status of advertisements that the peer sends to the local interface.
	Enable	(DCBX Version 1.01 only) State that the peer advertises to the local interface: • **Yes**—The feature is enabled. • **No**—The feature is disabled.
	Willing	(DCBX Version 1.01 only) Willingness of the peer to learn the FCoE interface state from the local interface using DCBX: • **Yes**—The peer is willing to learn the FCoE interface state from the local interface. • **No**—The peer is not willing to learn the FCoE interface state from the local interface.

Copyright © 2018, Juniper Networks, Inc.

Table 181: show dcbx neighbors Output Fields (continued)

Field Name		Field Description
	Error	(DCBX Version 1.01 only) Configuration compatibility error status: • **No**—No error detected. Local and peer configuration are compatible. • **Yes**—Error detected. Local and peer configuration are not compatible.
	Appl-Name	Name of the application: • **FCoE**—Fibre Channel over Ethernet
	Ethernet-Type	Ethernet type (EtherType) of the application. For example, **0x8906** indicates the EtherType for the FCoE application. Either the EtherType (for Layer 2 applications) or the Socket-Number (for Layer 4 applications) of the application is displayed in the output.
	Socket-Number	Destination port socket number of the application, if applicable. Either the EtherType (for Layer 2 applications) or the Socket Number (for Layer 4 applications) of the application is displayed in the output.
	Priority-Field or **Priority-Map**	Priority assigned to the application.
	Status	(DCBX Version 1.01 only) Peer interface status: • **Enabled**—The application feature is enabled on both the local interface and the peer interface. (The local configuration and the peer configuration match.) • **Disabled**—The local configuration and the peer configuration do not match.

Table 181: show dcbx neighbors Output Fields (continued)

Field Name			Field Description
Feature: ETS			Enhanced Transmission Selection (ETS) DCBX state information.
	Protocol-State		(DCBX Version 1.01 only) ETS protocol state synchronization status: • **in-sync**—The local interface received an acknowledge message from the peer to indicate that the peer received an ETS state change message sent by the local interface. • **ack-pending**—The local interface has not yet received an acknowledge message from the peer to indicate that the peer received an ETS state change message sent by the local interface.
	Operational State		(DCBX Version 1.01 only) Operational state of the feature, **enabled** or **disabled**.
	Local-Advertisement		Status of advertisements that the local interface sends to the peer.
		Enable	(DCBX Version 1.01 only) State that the local interface advertises to the peer: • **Yes**—The feature is enabled. • **No**—The feature is disabled.
		TLV Type	(IEEE DCBX only) Type of ETS TLV: • Configuration—Advertises the Configuration TLV, which communicates the local ETS configuration to the peer but does not ask the peer to use the configuration. • Recommendation—Advertises the Recommendation TLV, which communicates the local ETS configuration to the peer, and if the peer is “willing,” configures the peer interface to match the local ETS configuration. • Recommendation-or-Configuration—Advertises both TLVs.
		Willing	Willingness of the local interface to learn the ETS state from the peer using DCBX (EX Series switches always advertise **No** for this field): • **Yes**—Local interface is willing to learn the ETS state from the peer. • **No**—Local interface is not willing to learn the ETS state from the peer.
		Credit Based Shaper	

Copyright © 2018, Juniper Networks, Inc.

Table 181: show dcbx neighbors Output Fields (continued)

Field Name		Field Description
		(IEEE DCBX only) Alternative method of flow control to buffer-to-buffer credit. The QFX Series does not support a credit-based shaper, so the value of this field is always **No**.
	Error	(DCBX Version 1.01 only) Configuration error status: • **No**—No error. This should always be the switch ETS error state. • **Yes**—Error detected.
	Maximum Traffic Classes capable to support PFC	(DCBX Version 1.01 only) Largest number of traffic classes the local interface supports for PFC.
	Maximum Traffic Classes supported	(IEEE DCBX only) Largest number of traffic classes the local interface supports for ETS. (EX Series switches support only one traffic class for ETS. However, a different value might be shown for this field.)
	Code Point	PFC code point, which is specified in the 3-bit class-of-service field in the VLAN header.
	Priority-Group	Class-of-service (CoS) priority group (forwarding class set) identification number.
	Percentage B/W	Configured minimum percentage of link bandwidth allocated to the priority group. Only explicitly configured values appear in this output column. If the link bandwidth is the default percentage, it is not shown. (EX Series switches allocate 100% of link bandwidth to the default priority group, group 7.)
	Transmission Selection Algorithm	(IEEE DCBX only) The transmission selection algorithm used by the interface. The QFX Series supports ETS but does not support using the credit-based shaper algorithm, so the only value shown in this field is **ETS**.
Peer-Advertisement		Status of advertisements that the peer sends to the local interface.
	Enable	

Table 181: show dcbx neighbors Output Fields (continued)

Field Name	Field Description
	(DCBX Version 1.01 only) State that the peer advertises to the local interface: • **Yes**—The feature is enabled. • **No**—The feature is disabled.
TLV Type	(IEEE DCBX only) Type of ETS TLV: • Configuration—Advertises the Configuration TLV, which communicates the local ETS configuration to the peer but does not ask the peer to use the configuration. • Recommendation—Advertises the Recommendation TLV, which communicates the local ETS configuration to the peer, and if the peer is "willing," configures the peer interface to match the local ETS configuration. • Configuration/Recommendation—Advertises both TLVs.
Willing	Willingness of the peer to learn the ETS state from the local interface using DCBX: • **Yes**—Peer is willing to learn the ETS state from the local interface. • **No**—Peer is not willing to learn the ETS state from the local interface.
Credit Based Shaper	(IEEE DCBX only) Alternative method of flow control to buffer-to-buffer credit. The QFX Series does not support a credit-based shaper, so the value of this field is always **No**.
Error	(DCBX Version 1.01 only) Configuration error status of the peer: • **No**—No error in peer ETS TLV. • **Yes**—Error in peer ETS TLV.
Maximum Traffic Classes capable to support PFC	(DCBX Version 1.01 only) Largest number of traffic classes the local interface supports for PFC.
Maximum Traffic Classes supported	(IEEE DCBX only) Largest number of traffic classes the local interface supports for ETS. (EX Series switches support only one traffic class for ETS. However, a different value might be shown for this field.)
Code Point	

Copyright © 2018, Juniper Networks, Inc.

Table 181: show dcbx neighbors Output Fields (continued)

Field Name		Field Description
		PFC code point, which is specified in the 3-bit class-of-service field in the VLAN header.
	Priority-Group	CoS priority group (forwarding class set) identification number.
	Percentage B/W	Configured minimum percentage of link bandwidth allocated to the priority group. (EX Series switches allocate 100% of link bandwidth to the default priority group, group 7.)
	Transmission Selection Algorithm	(IEEE DCBX only) Transmission selection algorithm used by the interface. The QFX Series supports ETS but does not support using the credit-based shaper algorithm, so the only value shown in this field is **ETS**.
PFC		(QFX Series, **terse** option only) DCBX TLV advertisement state for PFC: • Disabled—PFC configuration matches the configuration on the connected peer and PFC is disabled • Enabled—PFC configuration matches the configuration on the connected peer and PFC is enabled • Not Advt—Interface does not advertise PFC to the connected peer
ETS		(**terse** option only) Local DCBX TLV advertisement state for ETS: • Advt—Interface advertises ETS TLVs • Disabled—ETS is disabled on the interface (interface does not advertise ETS)
ETS Rec		(**terse** option only) DCBX TLV peer advertisement state for ETS (state received from the connected DCBX peer): • Advt—Peer interface advertises ETS TLVs • Not Advt—Peer interface does not advertise ETS NOTE: When the DCBX mode is DCBX version 1.01, no peer information is displayed.

Table 181: show dcbx neighbors Output Fields (continued)

Field Name	Field Description
Version	(**terse** option only) The DCBX version used on the interface and whether the DCBX version was autonegotiated or explicitly configured: • **IEEE**—The interface uses IEEE DCBX. • **1.01**—The interface uses DCBX version 1.01. When the DCBX version used is the result of autonegotiation, the term **(Auto)** appears next to the version. For example, **IEEE (Auto)** indicates that the interface autonegotiated with the connected peer to use IEEE DCBX. Autonegotiation is enabled by default.

Sample Output

show dcbx neighbors interface (Junos Fusion Data Center, DCBX Version 1.01 Mode)

```
user@aggregation-device> show dcbx neighbors interface xe-0/0/0
Interface : xe-103/0/10.0 - Parent Interface: ae2.0
    Active-application-map: iscsi-map
    Protocol Mode: DCBX Version 1.01
    Protocol-State: in-sync

    Local-Advertisement:
        Operational version: 0
        sequence-number: 1, acknowledge-id: 6
        satellite sequence-number: 2

    Peer-Advertisement:
        Operational version: 0
        sequence-number: 6, acknowledge-id: 1

    Feature: PFC, Protocol-State: in-sync

      Operational State: Enabled

      Local-Advertisement:
        Enable: Yes, Willing: No, Error: No
        Maximum Traffic Classes capable to support PFC: 8

        Code Point          Admin Mode
          000                 Disabled
          001                 Disabled
          010                 Disabled
          011                 Enabled
          100                 Enabled
          101                 Disabled
          110                 Disabled
          111                 Disabled

      Peer-Advertisement:
        Enable: Yes, Willing: No, Error: No
        Maximum Traffic Classes capable to support PFC: 8
```


Copyright © 2018, Juniper Networks, Inc.

```
      Code Point          Admin Mode
        000                 Disabled
        001                 Disabled
        010                 Disabled
        011                 Enabled
        100                 Enabled
        101                 Disabled
        110                 Disabled
        111                 Disabled

  Feature: Application, Protocol-State: in-sync

    Local-Advertisement:
      Enable: Yes, Willing: No, Error: No

      Appl-Name    Ethernet-Type    Socket-Number    Priority-Map    Status
        FCoE         0x8906                            00001000       Enabled

        iSCSI                          3260            00010000       Enabled


    Peer-Advertisement:
      Enable: Yes, Willing: No, Error: No

      Appl-Name    Ethernet-Type    Socket-Number    Priority-Map    Status
        FCoE         0x8906                            00001000       Enabled

        iSCSI                          3260            00010000       Enabled


  Feature: ETS, Protocol-State: in-sync

    Operational State: Enabled

    Local-Advertisement:
      Enable: Yes, Willing: No, Error: No
      Maximum Traffic Classes supported : 3

      Code Point           Priority-Group
        000                  0
        001                  6
        010                  6
        011                  1
        100                  2
        101                  6
        110                  6
        111                  6

      Priority-Group       Percentage B/W
        0                    35%
        1                    40%
        2                    25%
        6                    0%

    Peer-Advertisement:
      Enable: Yes, Willing: No, Error: No
      Maximum Traffic Classes supported : 3

      Code Point           Priority-Group
        000                  0
```

```
          001                  6
          010                  6
          011                  1
          100                  2
          101                  6
          110                  6
          111                  6

        Priority-Group       Percentage B/W
          0                    35%
          1                    40%
          2                    25%
          6                    0%

Interface : xe-103/0/3.0 - Parent Interface: ae2.0
    Active-application-map: iscsi-map
    Protocol Mode: DCBX Version 1.01
    Protocol-State: in-sync

    Local-Advertisement:
        Operational version: 0
        sequence-number: 1, acknowledge-id: 5
        satellite sequence-number: 2

    Peer-Advertisement:
        Operational version: 0
        sequence-number: 5, acknowledge-id: 1

    Feature: PFC, Protocol-State: in-sync

      Operational State: Enabled

      Local-Advertisement:
        Enable: Yes, Willing: No, Error: No
        Maximum Traffic Classes capable to support PFC: 8

        Code Point          Admin Mode
          000                 Disabled
          001                 Disabled
          010                 Disabled
          011                 Enabled
          100                 Enabled
          101                 Disabled
          110                 Disabled
          111                 Disabled

      Peer-Advertisement:
        Enable: Yes, Willing: No, Error: No
        Maximum Traffic Classes capable to support PFC: 8

        Code Point          Admin Mode
          000                 Disabled
          001                 Disabled
          010                 Disabled
          011                 Enabled
          100                 Enabled
          101                 Disabled
          110                 Disabled
          111                 Disabled
```


Copyright © 2018, Juniper Networks, Inc.

```
Feature: Application, Protocol-State: in-sync

  Local-Advertisement:
    Enable: Yes, Willing: No, Error: No

    Appl-Name    Ethernet-Type    Socket-Number    Priority-Map    Status
      FCoE         0x8906                            00001000       Enabled

      iSCSI                          3260            00010000       Enabled


  Peer-Advertisement:
    Enable: Yes, Willing: No, Error: No

    Appl-Name    Ethernet-Type    Socket-Number    Priority-Map    Status
      FCoE         0x8906                            00001000       Enabled

      iSCSI                          3260            00010000       Enabled


Feature: ETS, Protocol-State: in-sync

  Operational State: Enabled

  Local-Advertisement:
    Enable: Yes, Willing: No, Error: No
    Maximum Traffic Classes supported : 3

    Code Point           Priority-Group
      000                  0
      001                  6
      010                  6
      011                  1
      100                  2
      101                  6
      110                  6
      111                  6

    Priority-Group       Percentage B/W
      0                    35%
      1                    40%
      2                    25%
      6                    0%

  Peer-Advertisement:
    Enable: Yes, Willing: No, Error: No
    Maximum Traffic Classes supported : 3

    Code Point           Priority-Group
      000                  0
      001                  6
      010                  6
      011                  1
      100                  2
      101                  6
      110                  6
      111                  6

    Priority-Group       Percentage B/W
      0                    35%
```

```
          1                    40%
          2                    25%
          6                    0%
```

show dcbx neighbors interface (QFX Series, DCBX Version 1.01 Mode)

```
user@switch> show dcbx neighbors interface xe-0/0/0
Interface : xe-0/0/0.0 - Parent Interface: ae0.0
    Active-application-map: app-map-1
    Protocol-State: in-sync
    Protocol-Mode: DCBX Version 1.01

    Local-Advertisement:
        Operational version: 1
        sequence-number: 130, acknowledge-id: 102

    Peer-Advertisement:
        Operational version: 1
        sequence-number: 102, acknowledge-id: 130

    Feature: PFC, Protocol-State: in-sync

      Operational State: Enabled

      Local-Advertisement:
        Enable: Yes, Willing: No, Error: No
        Maximum Traffic Classes capable to support PFC: 8

        Code Point           Admin Mode   Operational Mode
          000                 Disabled    Disable
          001                 Disabled    Disable
          010                 Disabled    Disable
          011                 Enabled     Enable
          100                 Enabled     Enable
          101                 Disabled    Disable
          110                 Disabled    Disable
          111                 Disabled    Disable

      Peer-Advertisement:
        Enable: Yes, Willing: No, Error: No
        Maximum Traffic Classes capable to support PFC: 8

        Code Point           Admin Mode
          000                 Disabled
          001                 Disabled
          010                 Disabled
          011                 Enabled
          100                 Enabled
          101                 Disabled
          110                 Disabled
          111                 Disabled

    Feature: Application, Protocol-State: in-sync

      Local-Advertisement:
        Enable: Yes, Willing: No, Error: No

        Appl-Name    Ethernet-Type    Socket-Number    Priority-Map    Status
          FCoE         0x8906                            00001110        Enabled
```


Copyright © 2018, Juniper Networks, Inc.

```
        iSCSI                           3260          10000000        Enabled


      Peer-Advertisement:
        Enable: Yes, Willing: Yes, Error: No

        Appl-Name    Ethernet-Type    Socket-Number    Priority-Map    Status

        FCoE         0x8906             N/A            00001110        Enabled


    Feature: ETS, Protocol-State: in-sync

      Operational State: Enabled

      Local-Advertisement:
        Enable: Yes, Willing: No, Error: No
        Maximum Traffic Classes capable to support PFC: 8

        Code Point           Priority-Group
          000                  0
          001                  7
          010                  7
          011                  7
          100                  0
          101                  1
          110                  1
          111                  7

        Priority-Group       Percentage B/W
          0                    40%
          1                    5%

      Peer-Advertisement:
        Enable: Yes, Willing: No, Error: No
        Maximum Traffic Classes capable to support PFC: 8

        Code Point           Priority-Group
          000                  0
          001                  7
          010                  7
          011                  7
          100                  0
          101                  1
          110                  1
          111                  7

        Priority-Group       Percentage B/W
          0                    40%
          1                    5%
```

show dcbx neighbors interface (QFX Series, IEEE DCBX Mode)

```
user@switch> show dcbx neighbors interface xe-0/0/0
```

```
Interface : xe-0/0/0.0 - Parent Interface: ae0.0
    Active-application-map: app-map-1
```

```
Protocol-Mode: IEEE-DCBX Version

Feature: PFC

  Local-Advertisement:
    Willing: No
    Mac auth Bypass Capability: No
    Operational State: Enabled

    Maximum Traffic Classes capable to support PFC: 8

    Code Point           Admin Mode
      000                 Disabled
      001                 Disabled
      010                 Disabled
      011                 Enabled
      100                 Enabled
      101                 Disabled
      110                 Disabled
      111                 Disabled

  Peer-Advertisement:
    Willing: No
    Mac auth Bypass Capability: No
    Operational State: Enabled

    Maximum Traffic Classes capable to support PFC: 8

    Code Point          Admin Mode
      000                 Disabled
      001                 Disabled
      010                 Disabled
      011                 Enabled
      100                 Enabled
      101                 Disabled
      110                 Disabled
      111                 Disabled

Feature: Application

  Local-Advertisement:

    Appl-Name    Ethernet-Type    Socket-Number    Priority-field
      FCoE         0x8906                            00001110
      iSCSI                            3260          10000000

  Peer-Advertisement:
    Appl-Name    Ethernet-Type    Socket-Number    Priority-field
      FCoE         0x8906             N/A            00001110

Feature: ETS

  Local-Advertisement:
    TLV Type: Configuration/Recommendation
    Willing: No
    Credit Based Shaper: No
    Maximum Traffic Classes supported: 3

    Code Point           Priority-Group
      000                  0
```


Copyright © 2018, Juniper Networks, Inc.

```
      001                  7
      010                  7
      011                  7
      100                  0
      101                  1
      110                  1
      111                  7

    Priority-Group       Percentage B/W
      0                    40%
      1                    5%

    Priority-Group   Transmission Selection Algorithm
      0              Enhanced Transmission Selection
      1              Enhanced Transmission Selection

  Peer-Advertisement:
    TLV Type: Configuration
    Willing: No
    Credit Based Shaper: No

    Code Point           Priority-Group
      000                  0
      001                  7
      010                  7
      011                  7
      100                  0
      101                  1
      110                  1
      111                  7

    Priority-Group       Percentage B/W
      0                    40%
      1                    5%

    Priority-Group   Transmission Selection Algorithm
      0              Enhanced Transmission Selection
      1              Enhanced Transmission Selection

  Peer-Advertisement:

    TLV Type: Recommendation

    Code Point           Priority-Group
      000                  0
      001                  7
      010                  7
      011                  7
      100                  0
      101                  1
      110                  1
      111                  7

    Priority-Group       Percentage B/W
      0                    40%
      1                    5%

    Priority-Group   Transmission Selection Algorithm
      0              Enhanced Transmission Selection
```

```
         1              Enhanced Transmission Selection
```

show dcbx neighbors terse (QFX Series)

```
user@switch> show dcbx neighbors terse

Interface   Parent      PFC        ETS        ETS        Version
            Interface                                    Rec
xe-0/0/8.0  -           Enabled    Advt       Advt       IEEE (Auto)
xe-0/0/9.0  -           Disabled   Disabled              1.01
xe-0/0/11.0 ae0.0       Enabled    Advt       Advt       IEEE (Auto)
xe-0/0/12.0 ae0.0       Enabled    Advt       Advt       IEEE (Auto)
xe-0/0/32.0 -           Enabled    Advt       Not Advt   IEEE
xe-0/0/36.0 -           Not Advt   Advt       Advt       IEEE
```

show dcbx neighbors (EX4500 Switch: FCoE Interfaces on Both Local and Peer with PFC Configured Compatibly)

```
user@switch> show dcbx neighbors interface xe-0/0/14

   Interface : xe-0/0/14.0 - Parent Interface: ae0.0
    Protocol-State: in-sync

    Local-Advertisement:
        Operational version: 0
        sequence-number: 6, acknowledge-id: 6

    Peer-Advertisement:
        Operational version: 0
        sequence-number: 6, acknowledge-id: 6

    Feature: PFC, Protocol-State: in-sync

      Operational State: Enabled

      Local-Advertisement:
        Enable: Yes, Willing: No, Error: No
        Maximum Traffic Classes capable to support PFC: 6

         Code Point            Admin Mode
          000                 Disabled
          001                 Disabled
          010                 Disabled
          011                 Enabled
          100                 Disabled
          101                 Disabled
          110                 Disabled
          111                 Disabled



      Peer-Advertisement:
        Enable: Yes, Willing: No, Error: No
        Maximum Traffic Classes capable to support PFC: 6

        Code Point             Admin Mode
```


Copyright © 2018, Juniper Networks, Inc.

```
         000                 Disabled
         001                 Disabled
         010                 Disabled
         011                 Enabled
         100                 Disabled
         101                 Disabled
         110                 Disabled
         111                 Disabled



    Feature: Application, Protocol-State: in-sync

      Local-Advertisement:
        Enable: Yes, Willing: No, Error: No   <<< Error bit will not be set as
there is no miss configuration between local and peer.


        Appl-Name    Ethernet-Type    Socket-Number    Priority-Map    Status
        FCoE          0x8906                            00001000        Enabled


      Peer-Advertisement:
        Enable: Yes, Willing: No, Error: No

                 Appl-Name    Ethernet-Type    Socket-Number    Priority-Map
Status
                 FCoE          0x8906                            00001000
Enabled
```

show dcbx neighbors (EX4500 Switch: DCBX Interfaces on Local and Peer Are Configured Compatibly with iSCSI Application)

user@switch> **show dcbx neighbors interface xe-0/0/14**

```
  Interface : xe-0/0/14.0 - Parent Interface: ae0.0

    Protocol-State: in-sync

    Active-application-map: iscsi-map

     Local-Advertisement:
        Operational version: 0
        sequence-number: 9, acknowledge-id: 12


    Peer-Advertisement:
        Operational version: 0
        sequence-number: 12, acknowledge-id: 9


    Feature: PFC, Protocol-State: in-sync
      Operational State: Enabled
       Local-Advertisement:
        Enable: Yes, Willing: No, Error: No
        Maximum Traffic Classes capable to support PFC: 6
```

```
    Code Point              Admin Mode
         000                 Disabled
         001                 Disabled
         010                 Disabled
         011                 Enabled
         100                 Disabled
         101                 Disabled
         110                 Disabled
         111                 Disabled

     Peer-Advertisement:
       Enable: Yes, Willing: No, Error: No
       Maximum Traffic Classes capable to support PFC: 6

    Code Point              Admin Mode
         000                 Disabled
         001                 Disabled
         010                 Disabled
         011                 Enabled
         100                 Disabled
         101                 Disabled
         110                 Disabled
         111                 Disabled

    Feature: Application, Protocol-State: in-sync
     Local-Advertisement:
       Enable: Yes, Willing: No, Error: No

           Appl-Name    Ethernet-Type    Socket-Number   Priority-Map    Status

            FCoE         0x8906                          00001000        Enabled

            iscsi                         3260           00100000        Enabled



     Peer-Advertisement:
       Enable: Yes, Willing: No, Error: No

           Appl-Name    Ethernet-Type    Socket-Number   Priority-Map    Status

            FCoE         0x8906                          00001000        Enabled

            iscsi                         3260           00100000        Enabled
```

show dcbx neighbors (EX4500 Switch: Includes ETS)

```
user@switch> show dcbx neighbors interface xe-0/0/3
```

```
   Interface : xe-0/0/3.0
    Protocol-State: in-sync
    Active-application-map: map_iscsi

    Local-Advertisement:
        Operational version: 0
        sequence-number: 1, acknowledge-id: 5
```


Copyright © 2018, Juniper Networks, Inc.

```
Peer-Advertisement:
    Operational version: 0
    sequence-number: 5, acknowledge-id: 1

Feature: PFC, Protocol-State: in-sync

  Operational State: Enabled

  Local-Advertisement:
    Enable: Yes, Willing: No, Error: No
    Maximum Traffic Classes capable to support PFC: 6

    Code Point          Admin Mode
      000                 Enabled
      001                 Enabled
      010                 Disabled
      011                 Disabled
      100                 Disabled
      101                 Disabled
      110                 Disabled
      111                 Disabled

  Peer-Advertisement:
    Enable: Yes, Willing: Yes, Error: No
    Maximum Traffic Classes capable to support PFC: 8

    Code Point          Admin Mode
      000                 Enabled
      001                 Disabled
      010                 Disabled
      011                 Disabled
      100                 Enabled
      101                 Disabled
      110                 Disabled
      111                 Disabled

Feature: Application, Protocol-State: in-sync

  Local-Advertisement:
    Enable: Yes, Willing: No, Error: No

    Appl-Name    Ethernet-Type    Socket-Number    Priority-Map    Status
      FCoE         0x8906                            00000001       Enabled

      iscsi                          3260            00000010       Enabled


  Peer-Advertisement:
    Enable: Yes, Willing: Yes, Error: No

    Appl-Name    Ethernet-Type    Socket-Number    Priority-Map    Status
      FCoE         0x8906                            00001000       Enabled

      iscsi                          3260            00010000       Enabled


Feature: ETS, Protocol-State: in-sync

  Operational State: Enabled
```

```
Local-Advertisement:
  Enable: Yes, Willing: No, Error: No
  Maximum Traffic Classes supported : 3

  Code Point           Priority-Group
    000                  7
    001                  7
    010                  7
    011                  7
    100                  7
    101                  7
    110                  7
    111                  7

  Priority-Group       Percentage B/W
    7                    100%

Peer-Advertisement:
  Enable: Yes, Willing: Yes, Error: No
  Maximum Traffic Classes supported : 8

  Code Point           Priority-Group
    000                  0
    001                  1
    010                  0
    011                  0
    100                  2
    101                  0
    110                  0
    111                  0

  Priority-Group       Percentage B/W
    0                    30%
    1                    40%
    2                    30%
```


Copyright © 2018, Juniper Networks, Inc.

CHAPTER 21

Operational Commands (Buffers)

- show class-of-service shared-buffer

show class-of-service shared-buffer

Syntax

```
show class-of-service shared-buffer
<egress | ingress>
```

Release Information

Command introduced in Junos OS Release 12.3 for the QFX Series.
Command introduced in Junos OS Release 14.1X53-D20 for the OCX Series.

Description

Display the shared buffer allocation and partitioning configuration.

NOTE: Due to QFX5200 cross-point architecture, all buffer usage counters are maintained separately. When usage counters are displayed with the command show class-of-service shared-buffer on QFX5200, various pipe counters are displayed separately.

Options

none—Display ingress and egress shared buffer settings.

egress—(Optional) Display the egress shared buffer settings.

ingress—(Optional) Display the ingress shared buffer settings.

Required Privilege Level

view

Related Documentation

- Example: Recommended Configuration of the Shared Buffer Pool for Networks with Mostly Best-Effort Unicast Traffic on page 592
- Example: Recommended Configuration of the Shared Buffer Pool for Networks with Mostly Multicast Traffic on page 605
- Example: Recommended Configuration of the Shared Buffer Pool for Networks with Mostly Lossless Traffic on page 611
- Configuring Global Ingress and Egress Shared Buffers on page 590
- Understanding CoS Buffer Configuration on page 568

List of Sample Output

show class-of-service shared-buffer on page 1021

Output Fields

Table 182 on page 1021 describes the output fields for the **show class-of-service shared-buffer** command. Output fields are listed in the approximate order in which they appear.

Copyright © 2018, Juniper Networks, Inc.

Table 182: show class-of-service shared-buffer Output Fields

Field Name	Field Description
Ingress	Ingress shared buffer configuration.
Total Buffer	Total buffer space available to the ports in KB. This is the combined dedicated buffer pool and shared buffer pool.
Dedicated Buffer	Buffer space allocated to the dedicated buffer pool in KB.
Shared Buffer	Buffer space allocated to the shared buffer pool in KB.
Lossless	Buffer space allocated to the lossless traffic buffer pool in KB.
Lossless Headroom	Buffer space allocated to the lossless headroom traffic buffer pool to support priority-based flow control (PFC) and Ethernet PAUSE in KB. (Ingress ports only.) NOTE: OCX Series switches do not support PFC.
Lossy	Buffer space allocated to the lossy (best-effort) traffic buffer pool in KB.
Lossless Headroom Utilization	Utilization of the ingress lossless headroom buffer pool. (These fields can help you to determine how much headroom buffer space you need to reserve to support PFC and Ethernet PAUSE for lossless flows.) NOTE: OCX Series switches do not support PFC.
Node Device	Index number that identifies the switch. On a QFX3500 switch, this field always has a value of zero (0).
Total	Size of the lossless headroom ingress buffer pool in KB.
Used	Amount in KB of lossless headroom ingress buffer used.
Free	Amount in KB of lossless headroom ingress buffer free (unused).
Egress	Egress shared buffer configuration.
Multicast	Buffer space allocated to the multicast traffic buffer pool in KB. (Egress ports only.)

Sample Output

show class-of-service shared-buffer

```
user@switch> show class-of-service shared-buffer
Ingress:
  Total Buffer     :  9360.00 KB
  Dedicated Buffer :  2158.00 KB
  Shared Buffer    :  7202.00 KB
```

```
    Lossless          :  648.18 KB
    Lossless Headroom :  3240.90 KB
    Lossy             :  3312.92 KB

  Lossless Headroom Utilization:
  Node Device         Total          Used                  Free
  0                   3240.90 KB     0.00 KB               3240.90 KB

Egress:
  Total Buffer     :  9360.00 KB
  Dedicated Buffer :  2704.00 KB
  Shared Buffer    :  6656.00 KB
    Lossless          :  3328.00 KB
    Multicast         :  1264.64 KB
    Lossy             :  2063.36 KB
```


Copyright © 2018, Juniper Networks, Inc.