Junos® OS

OVSDB-VXLAN Feature Guide for QFX Series Switches (VMware NSX)

Modified: 2018-12-12

Copyright © 2018, Juniper Networks, Inc.

Juniper Networks, Inc.
1133 Innovation Way
Sunnyvale, California 94089
USA
408-745-2000
www.juniper.net

Juniper Networks, the Juniper Networks logo, Juniper, and Junos are registered trademarks of Juniper Networks, Inc. in the United States and other countries. All other trademarks, service marks, registered marks, or registered service marks are the property of their respective owners.

Juniper Networks assumes no responsibility for any inaccuracies in this document. Juniper Networks reserves the right to change, modify, transfer, or otherwise revise this publication without notice.

Junos® OS OVSDB-VXLAN Feature Guide for QFX Series Switches (VMware NSX)
Copyright © 2018 Juniper Networks, Inc. All rights reserved.

The information in this document is current as of the date on the title page.

YEAR 2000 NOTICE

Juniper Networks hardware and software products are Year 2000 compliant. Junos OS has no known time-related limitations through the year 2038. However, the NTP application is known to have some difficulty in the year 2036.

END USER LICENSE AGREEMENT

The Juniper Networks product that is the subject of this technical documentation consists of (or is intended for use with) Juniper Networks software. Use of such software is subject to the terms and conditions of the End User License Agreement ("EULA") posted at https://support.juniper.net/support/eula/. By downloading, installing or using such software, you agree to the terms and conditions of that EULA.

Table of Contents

About the Documentation xi
Documentation and Release Notes xi
Using the Examples in This Manual xi
Merging a Full Example xii
Merging a Snippet xii
Documentation Conventions xiii
Documentation Feedback xv
Requesting Technical Support xv
Self-Help Online Tools and Resources xvi
Opening a Case with JTAC xvi

Part 1 Overview

Chapter 1 **OVSDB and VXLAN Overview 3**

Understanding the Junos OS Implementation of OVSDB and VXLAN in a VMware NSX for vSphere Environment 3
Understanding VXLANs 5
VXLAN Benefits 6
How Does VXLAN Work? 7
VXLAN Implementation Methods 8
Using QFX5100, QFX5110, QFX5200, QFX5210, and EX4600 Switches with VXLANs 8
Changing the UDP Port on QFX5100, QFX5110, QFX5200, QFX5210, and EX4600 Switches 9
Controlling Transit Multicast Traffic on QFX5100, QFX5110, QFX5200, QFX5210, and EX4600 Switches 10
Using an MX Series Router, EX9200 Switch, or QFX10000 Switch as a VTEP 10
Manual VXLANs Require PIM 11
Load Balancing VXLAN Traffic 11
VLAN IDs for VXLANs 12
VXLAN Constraints on QFX Series and EX4600 Switches 12
VXLAN Constraints on QFX5100, QFX5110, QFX5200, QFX5210, and EX4600 Switches 13
VXLAN Constraints on QFX10000 Switches 14
Understanding the OVSDB Protocol Running on Juniper Networks Devices 15
OVSDB Support on Juniper Networks Devices 16
OVSDB Schema for Physical Devices 17
Understanding How Layer 2 BUM and Layer 3 Routed Multicast Traffic Are Handled with OVSDB 20
Understanding BFD in a VMware NSX Environment with OVSDB and VXLAN . . . 21

Understanding Overlay ping and traceroute Packet Support 23
Overlay ping and traceroute Functionality 24
Overlay OAM Packet Format for UDP Payloads 24
PIM NSR and Unified ISSU Support for VXLAN Overview 26

Part 2 Configuring OVSDB and VXLAN

Chapter 2 **Configuring OVSDB-Managed VXLANs with an SDN Controller 31**

OVSDB and VXLAN Configuration Workflows for VMware NSX Environment 31
OVSDB and VXLAN Configuration Workflow for QFX Series Switches 32
OVSDB and VXLAN Configuration Workflow for MX Series Routers and EX9200 Switches 33
Installing OVSDB on Juniper Networks Devices 35
Understanding How to Set Up OVSDB Connections on a Juniper Networks Device 36
Creating and Installing an SSL Key and Certificate on a Juniper Networks Device for Connection with SDN Controllers 37
Setting Up OVSDB on Juniper Networks Devices That Support the Dynamic Configuration of VXLANs 38
Understanding Dynamically Configured VXLANs in an OVSDB Environment 39
Performing Tasks Before and After the Dynamic Configuration of OVSDB-Managed VXLANs 40
What the Juniper Networks Switch Actually Creates Dynamically 44
Dynamic Association of a Trunk Interface Supporting Untagged Packets to a Dynamically Created VXLAN 45
Dynamic Association of a Trunk Interface Supporting Tagged Packets to a Dynamically Created VXLAN 46
VMware NSX Configuration for Juniper Networks Devices Functioning as Virtual Tunnel Endpoints 47
Creating a Gateway 48
Creating a Gateway Service 48
Creating a Logical Switch Port 49
Example: Setting Up a VXLAN Layer 2 Gateway and OVSDB Connections in a VMware NSX Environment (Trunk Interfaces Supporting Untagged Packets) 50
Example: Setting Up a VXLAN Layer 2 Gateway and OVSDB Connections in a VMware NSX Environment (Trunk Interfaces Supporting Tagged Packets) 58
Verifying That a Logical Switch and Corresponding Junos OS OVSDB-Managed VXLAN Are Working Properly 68

Chapter 3 **Configuring VXLANs Without an SDN Controller 71**

Manually Configuring VXLANs on QFX Series and EX4600 Switches 71
Configuring a Source IP Address 71
Configuring PIM for VXLANs 72

 Copyright © 2018, Juniper Networks, Inc.

Configuring VXLANs 72
Examples: Manually Configuring VXLANs on QFX Series and EX4600 Switches 73
Example: Configuring a VXLAN Transit Switch 73
Example: Configuring a VXLAN Layer 2 Gateway 75
Verifying That a Local VXLAN VTEP Is Configured Correctly 83
Verifying MAC Learning from a Remote VTEP 83

Part 3 Troubleshooting

Chapter 4 **Troubleshooting Tasks 87**

Troubleshooting a Nonoperational Logical Switch and Corresponding Junos OS OVSDB-Managed VXLAN 87
Verifying VXLAN Reachability 89
Monitoring a Remote VTEP Interface 90
Example: Troubleshooting a VXLAN Overlay Network By Using Overlay Ping and Traceroute on QFX Series Switches 91

Part 4 Configuration Statements and Operational Commands

Chapter 5 **OVSDB Configuration Statements 105**

controller (OVSDB) 106
inactivity-probe-duration 107
interfaces (OVSDB) 108
maximum-backoff-duration 109
ovsdb 110
ovsdb-managed 111
port (OVSDB) 112
protocol (OVSDB) 113
traceoptions (OVSDB) 114

Chapter 6 **VXLAN Configuration Statements 117**

decapsulate-accept-inner-vlan 117
encapsulate-inner-vlan 118
multicast-group 119
ovsdb-managed 120
unreachable-vtep-aging-timer 121
vni 122
vtep-source-interface 123
vxlan 124

Chapter 7 **OVSDB Operational Commands 125**

clear ovsdb commit failures 126
show ovsdb commit failures 128
show ovsdb controller 131
show ovsdb interface 133
show ovsdb logical-switch 135
show ovsdb mac 138
show ovsdb statistics interface 142
show ovsdb tunnels 144

Copyright © 2018, Juniper Networks, Inc.

show ovsdb virtual-tunnel-end-point 147
show vpls mac-table 149

Chapter 8 **VXLAN Operational Commands 155**

ping overlay 156
show bridge mac-table 161
show multicast route 167
show pim join 179
show vpls mac-table 195
traceroute overlay 201

Copyright © 2018, Juniper Networks, Inc.

List of Figures

Part 1 Overview

Chapter 1 **OVSDB and VXLAN Overview 3**

Figure 1: High-Level View of NSX for vSphere Architecture 4
Figure 2: Integration of Juniper Networks Device into NSX for vSphere Environment 5
Figure 3: VXLAN Packet Format 8
Figure 4: VXLAN Packet Format for BFD Control Messages 22
Figure 5: VXLAN-Encapsulated Overlay OAM Packet 24

Part 2 Configuring OVSDB and VXLAN

Chapter 2 **Configuring OVSDB-Managed VXLANs with an SDN Controller 31**

Figure 6: VXLAN-OVSDB Layer 2 Gateway Topology 52
Figure 7: VXLAN/OVSDB Layer 2 Gateway Topology 60

Chapter 3 **Configuring VXLANs Without an SDN Controller 71**

Figure 8: QFX5100 Acting as a VXLAN Transit Switch 74
Figure 9: QFX5100 Acting as a VTEP 76

Part 3 Troubleshooting

Chapter 4 **Troubleshooting Tasks 87**

Figure 10: Using Overlay Ping and Traceroute to Troubleshoot a VXLAN Overlay Network 92

Copyright © 2018, Juniper Networks, Inc.

Copyright © 2018, Juniper Networks, Inc.

List of Tables

About the Documentation xi

Table 1: Notice Icons xiii
Table 2: Text and Syntax Conventions xiv

Part 1 Overview

Chapter 1 **OVSDB and VXLAN Overview 3**

Table 3: NSX for vSphere Components and Related Products 3
Table 4: OVSDB Schema Tables 17

Part 2 Configuring OVSDB and VXLAN

Chapter 2 **Configuring OVSDB-Managed VXLANs with an SDN Controller 31**

Table 5: OVSDB and VXLAN Configuration Workflow for QFX Series Switches 32
Table 6: OVSDB and VXLAN Configuration Workflow for MX Series Routers and EX9200 Switches 33
Table 7: Workflow of Tasks and Events for the Dynamic Configuration of OVSDB-Managed VXLANs in an NSX Environment 40
Table 8: Workflow of Tasks and Events for the Dynamic Configuration of OVSDB-Managed VXLANs in a Contrail Environment 42
Table 9: Key Configurations to Create a Gateway in NSX Manager 48
Table 10: Key Configurations to Create a Gateway Service in NSX Manager 49
Table 11: Key Configurations to Create a Logical Switch Port in NSX Manager . . . 49
Table 12: NSX Manager and Junos OS Entities That Must Be Configured 52
Table 13: Components of the Topology for Setting Up a VXLAN Layer 2 Gateway and OVSDB Connections 53
Table 14: NSX Manager and Junos OS Entities That Must Be Configured 61
Table 15: NSX Manager Configurations and Dynamic Configurations by Juniper Networks Switch 62
Table 16: Components for Two VXLAN Topologies Configured on a Juniper Networks Switch that Functions as a Hardware VTEP 62

Part 3 Troubleshooting

Chapter 4 **Troubleshooting Tasks 87**

Table 17: Ping and Traceroute Overlay Parameter Values For Scenarios 1, 2, and 3 93

Part 4 Configuration Statements and Operational Commands

Chapter 7 **OVSDB Operational Commands 125**

Table 18: show ovsdb commit failures Output Fields 129
Table 19: show ovsdb controller Output Fields 131
Table 20: show ovsdb interface Output Fields 133
Table 21: show ovsdb logical-switch Output Fields 136
Table 22: show ovsdb mac Output Fields 139
Table 23: show ovsdb statistics interface Output Fields 142
Table 24: show ovsdb tunnels Output Fields 145
Table 25: show ovsdb virtual-tunnel-end-point Output Fields 147
Table 26: show vpls mac-table Output fields 150

Chapter 8 **VXLAN Operational Commands 155**

Table 27: ping overlay Output Fields 158
Table 28: show bridge mac-table Output Fields 162
Table 29: show multicast route Output Fields 169
Table 30: show pim join Output Fields 181
Table 31: show vpls mac-table Output fields 196
Table 32: traceroute overlay Output Fields 203

 Copyright © 2018, Juniper Networks, Inc.

About the Documentation

- Documentation and Release Notes on page xi
- Using the Examples in This Manual on page xi
- Documentation Conventions on page xiii
- Documentation Feedback on page xv
- Requesting Technical Support on page xv

Documentation and Release Notes

To obtain the most current version of all Juniper Networks® technical documentation, see the product documentation page on the Juniper Networks website at https://www.juniper.net/documentation/.

If the information in the latest release notes differs from the information in the documentation, follow the product Release Notes.

Juniper Networks Books publishes books by Juniper Networks engineers and subject matter experts. These books go beyond the technical documentation to explore the nuances of network architecture, deployment, and administration. The current list can be viewed at https://www.juniper.net/books.

Using the Examples in This Manual

If you want to use the examples in this manual, you can use the **load merge** or the **load merge relative** command. These commands cause the software to merge the incoming configuration into the current candidate configuration. The example does not become active until you commit the candidate configuration.

If the example configuration contains the top level of the hierarchy (or multiple hierarchies), the example is a *full example*. In this case, use the **load merge** command.

If the example configuration does not start at the top level of the hierarchy, the example is a *snippet*. In this case, use the **load merge relative** command. These procedures are described in the following sections.

Merging a Full Example

To merge a full example, follow these steps:

1. From the HTML or PDF version of the manual, copy a configuration example into a text file, save the file with a name, and copy the file to a directory on your routing platform.

   For example, copy the following configuration to a file and name the file **ex-script.conf**. Copy the **ex-script.conf** file to the **/var/tmp** directory on your routing platform.

   ```
   system {
     scripts {
       commit {
         file ex-script.xsl;
       }
     }
   }
   interfaces {
     fxp0 {
       disable;
       unit 0 {
         family inet {
           address 10.0.0.1/24;
         }
       }
     }
   }
   ```

2. Merge the contents of the file into your routing platform configuration by issuing the **load merge** configuration mode command:

   ```
   [edit]
   user@host# load merge /var/tmp/ex-script.conf
   load complete
   ```

Merging a Snippet

To merge a snippet, follow these steps:

1. From the HTML or PDF version of the manual, copy a configuration snippet into a text file, save the file with a name, and copy the file to a directory on your routing platform.

   For example, copy the following snippet to a file and name the file **ex-script-snippet.conf**. Copy the **ex-script-snippet.conf** file to the **/var/tmp** directory on your routing platform.

   ```
   commit {
     file ex-script-snippet.xsl; }
   ```


Copyright © 2018, Juniper Networks, Inc.

2. Move to the hierarchy level that is relevant for this snippet by issuing the following configuration mode command:

```
[edit]
user@host# edit system scripts
[edit system scripts]
```

3. Merge the contents of the file into your routing platform configuration by issuing the **load merge relative** configuration mode command:

```
[edit system scripts]
user@host# load merge relative /var/tmp/ex-script-snippet.conf
load complete
```

For more information about the **load** command, see CLI Explorer.

Documentation Conventions

Table 1 on page xiii defines notice icons used in this guide.

Table 1: Notice Icons

Icon	Meaning	Description
	Informational note	Indicates important features or instructions.
	Caution	Indicates a situation that might result in loss of data or hardware damage.
	Warning	Alerts you to the risk of personal injury or death.
	Laser warning	Alerts you to the risk of personal injury from a laser.
	Tip	Indicates helpful information.
	Best practice	Alerts you to a recommended use or implementation.

Table 2 on page xiv defines the text and syntax conventions used in this guide.

Table 2: Text and Syntax Conventions

Convention	Description	Examples
Bold text like this	Represents text that you type.	To enter configuration mode, type the **configure** command: user@host> **configure**
`Fixed-width text like this`	Represents output that appears on the terminal screen.	`user@host>` **show chassis alarms** `No alarms currently active`
Italic text like this	• Introduces or emphasizes important new terms. • Identifies guide names. • Identifies RFC and Internet draft titles.	• A policy *term* is a named structure that defines match conditions and actions. • *Junos OS CLI User Guide* • RFC 1997, *BGP Communities Attribute*
Italic text like this	Represents variables (options for which you substitute a value) in commands or configuration statements.	Configure the machine's domain name: [edit] root@# **set system domain-name** *domain-name*
Text like this	Represents names of configuration statements, commands, files, and directories; configuration hierarchy levels; or labels on routing platform components.	• To configure a stub area, include the **stub** statement at the **[edit protocols ospf area area-id]** hierarchy level. • The console port is labeled **CONSOLE**.
< > (angle brackets)	Encloses optional keywords or variables.	**stub <default-metric** *metric***>;**
| (pipe symbol)	Indicates a choice between the mutually exclusive keywords or variables on either side of the symbol. The set of choices is often enclosed in parentheses for clarity.	**broadcast | multicast** (***string1* | *string2* | *string3***)
# (pound sign)	Indicates a comment specified on the same line as the configuration statement to which it applies.	**rsvp { # Required for dynamic MPLS only**
[ ] (square brackets)	Encloses a variable for which you can substitute one or more values.	**community name members [** ***community-ids*** **]**

Indention and braces ({ })	Identifies a level in the configuration hierarchy.	[edit]
		routing-options {
		static {
		route default {
		nexthop *address*;
		retain;
		}
		}
		}

; (semicolon)	Identifies a leaf statement at a configuration hierarchy level.	

Copyright © 2018, Juniper Networks, Inc.

Table 2: Text and Syntax Conventions (continued)

Convention	Description	Examples
GUI Conventions		
Bold text like this	Represents graphical user interface (GUI) items you click or select.	• In the Logical Interfaces box, select **All Interfaces**. • To cancel the configuration, click **Cancel**.
> (bold right angle bracket)	Separates levels in a hierarchy of menu selections.	In the configuration editor hierarchy, select **Protocols>Ospf**.

Documentation Feedback

We encourage you to provide feedback so that we can improve our documentation. You can use either of the following methods:

- Online feedback system—Click TechLibrary Feedback, on the lower right of any page on the Juniper Networks TechLibrary site, and do one of the following:

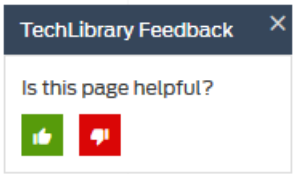

  - Click the thumbs-up icon if the information on the page was helpful to you.
  - Click the thumbs-down icon if the information on the page was not helpful to you or if you have suggestions for improvement, and use the pop-up form to provide feedback.

- E-mail—Send your comments to **techpubs-comments@juniper.net**. Include the document or topic name, URL or page number, and software version (if applicable).

Requesting Technical Support

Technical product support is available through the Juniper Networks Technical Assistance Center (JTAC). If you are a customer with an active J-Care or Partner Support Service support contract, or are covered under warranty, and need post-sales technical support, you can access our tools and resources online or open a case with JTAC.

- JTAC policies—For a complete understanding of our JTAC procedures and policies, review the *JTAC User Guide* located at https://www.juniper.net/us/en/local/pdf/resource-guides/7100059-en.pdf.

- Product warranties—For product warranty information, visit https://www.juniper.net/support/warranty/.

Copyright © 2018, Juniper Networks, Inc.

- JTAC hours of operation—The JTAC centers have resources available 24 hours a day, 7 days a week, 365 days a year.

Self-Help Online Tools and Resources

For quick and easy problem resolution, Juniper Networks has designed an online self-service portal called the Customer Support Center (CSC) that provides you with the following features:

- Find CSC offerings: https://www.juniper.net/customers/support/
- Search for known bugs: https://prsearch.juniper.net/
- Find product documentation: https://www.juniper.net/documentation/
- Find solutions and answer questions using our Knowledge Base: https://kb.juniper.net/
- Download the latest versions of software and review release notes: https://www.juniper.net/customers/csc/software/
- Search technical bulletins for relevant hardware and software notifications: https://kb.juniper.net/InfoCenter/
- Join and participate in the Juniper Networks Community Forum: https://www.juniper.net/company/communities/
- Open a case online in the CSC Case Management tool: https://www.juniper.net/cm/

To verify service entitlement by product serial number, use our Serial Number Entitlement (SNE) Tool: https://entitlementsearch.juniper.net/entitlementsearch/

Opening a Case with JTAC

You can open a case with JTAC on the Web or by telephone.

- Use the Case Management tool in the CSC at https://www.juniper.net/cm/.
- Call 1-888-314-JTAC (1-888-314-5822 toll-free in the USA, Canada, and Mexico).

For international or direct-dial options in countries without toll-free numbers, see https://www.juniper.net/support/requesting-support.html.

Copyright © 2018, Juniper Networks, Inc.

PART 1

Overview

- OVSDB and VXLAN Overview on page 3

Copyright © 2018, Juniper Networks, Inc.

Copyright © 2018, Juniper Networks, Inc.

CHAPTER 1

OVSDB and VXLAN Overview

- Understanding the Junos OS Implementation of OVSDB and VXLAN in a VMware NSX for vSphere Environment on page 3
- Understanding VXLANs on page 5
- VXLAN Constraints on QFX Series and EX4600 Switches on page 12
- Understanding the OVSDB Protocol Running on Juniper Networks Devices on page 15
- OVSDB Support on Juniper Networks Devices on page 16
- OVSDB Schema for Physical Devices on page 17
- Understanding How Layer 2 BUM and Layer 3 Routed Multicast Traffic Are Handled with OVSDB on page 20
- Understanding BFD in a VMware NSX Environment with OVSDB and VXLAN on page 21
- Understanding Overlay ping and traceroute Packet Support on page 23
- PIM NSR and Unified ISSU Support for VXLAN Overview on page 26

Understanding the Junos OS Implementation of OVSDB and VXLAN in a VMware NSX for vSphere Environment

Some Juniper Networks devices support Virtual Extensible LAN (VXLAN) and the Open vSwitch Database (OVSDB) management protocol. (See "OVSDB Support on Juniper Networks Devices" on page 16.) Support for VXLAN and OVSDB enables the Juniper Networks devices in a physical network to be integrated into a virtual network.

The implementation of VXLAN and OVSDB on Juniper Networks devices is supported in a VMware NSX for NSX for vSphere environment for the data center. Table 3 on page 3 outlines the components that compose this environment and products that are typically deployed for each component.

Table 3: NSX for vSphere Components and Related Products

Component	Products
Cloud management platform (CMP)	CloudStack OpenStack Custom CMP

Copyright © 2018, Juniper Networks, Inc.

Table 3: NSX for vSphere Components and Related Products (continued)

Component	Products
Network virtualization platform	NSX for vSphere
Hypervisor	Kernel-based Virtual Machine (KVM) Red Hat VMware ESXi Xen NOTE: Juniper Networks supports only KVM and ESXi.
Virtual switch	Open vSwitch (OVS) NSX vSwitch
SDN controller	NSX for vSphere controller
Overlay protocol	VXLAN
Media access control (MAC) learning protocol	OVSDB

Figure 1 on page 4 shows a high-level view of the NSX for vSphere platform architecture, while Figure 2 on page 5 provides a more detailed representation of the components in the virtual and physical networks.

Figure 1: High-Level View of NSX for vSphere Architecture

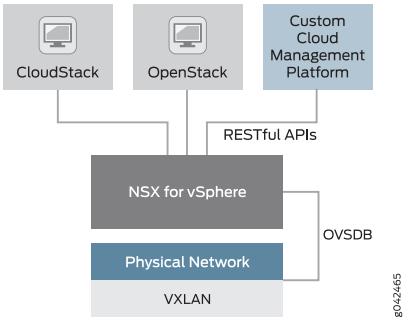

Copyright © 2018, Juniper Networks, Inc.

Figure 2: Integration of Juniper Networks Device into NSX for vSphere Environment

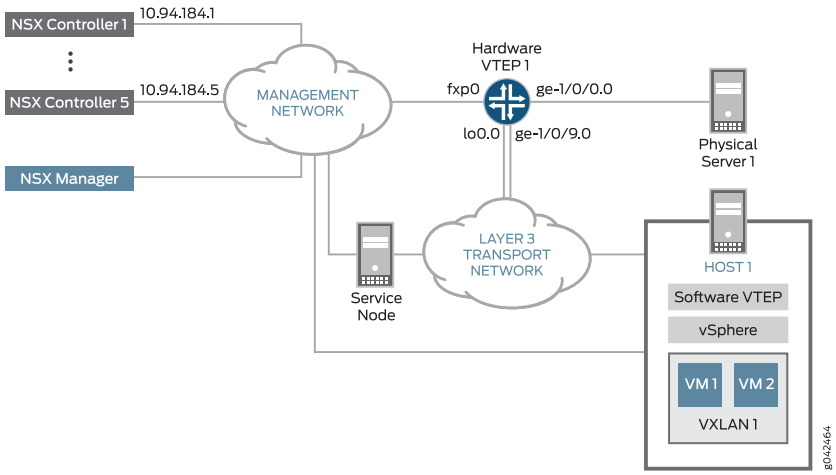

In the data center topology shown in Figure 2 on page 5, the physical and virtual servers need to communicate. To facilitate this communication, a Juniper Networks device that supports VXLAN is strategically deployed so that it serves as a *gateway*, which is also known as a hardware virtual tunnel endpoint (VTEP), at the edge of the physical network. Working in conjunction with the software VTEP, which is deployed at the edge of the virtual network, the hardware VTEP encapsulates packets from resources on Physical Server 1 with a VXLAN header, and after the packets traverse the Layer 3 transport network, the software VTEP removes the VXLAN header from the packets and forwards the packets to the appropriate virtual machines (VMs). In essence, the encapsulation and de-encapsulation of packets by the hardware and software VTEPs enable the components in the physical and virtual networks to coexist without one needing to understand the workings of the other.

The same Juniper Networks device that acts as a hardware VTEP in Figure 2 on page 5 implements OVSDB, which enables this device to learn the MAC addresses of Physical Server 1 and other physical servers, and publish the addresses in the OVSDB schema, which was defined for physical devices. In the virtual network, one or more NSX controllers collect the MAC addresses of Host 1 and other virtual servers, and publish the addresses in the OVSDB schema. Using the OVSDB schema, components in the physical and virtual networks can exchange MAC addresses, as well as statistical information, enabling the components to learn about and reach each other in their respective networks.

Related Documentation

- Understanding the OVSDB Protocol Running on Juniper Networks Devices on page 15
- *OVSDB Schema for Physical Devices*

Understanding VXLANs

Virtual Extensible LAN protocol (VXLAN) technology allows networks to support more VLANs. According to the IEEE 802.1Q standard, traditional VLAN identifiers are 12 bits long—this naming limits networks to 4094 VLANs. The VXLAN protocol overcomes this

limitation by using a longer logical network identifier that allows more VLANs and, therefore, more logical network isolation for large networks such as clouds that typically include many virtual machines.

- VXLAN Benefits on page 6
- How Does VXLAN Work? on page 7
- VXLAN Implementation Methods on page 8
- Using QFX5100, QFX5110, QFX5200, QFX5210, and EX4600 Switches with VXLANs on page 8
- Changing the UDP Port on QFX5100, QFX5110, QFX5200, QFX5210, and EX4600 Switches on page 9
- Controlling Transit Multicast Traffic on QFX5100, QFX5110, QFX5200, QFX5210, and EX4600 Switches on page 10
- Using an MX Series Router, EX9200 Switch, or QFX10000 Switch as a VTEP on page 10
- Manual VXLANs Require PIM on page 11
- Load Balancing VXLAN Traffic on page 11
- VLAN IDs for VXLANs on page 12

VXLAN Benefits

VXLAN technology allows you to segment your networks (as VLANs do), but it provides benefits that VLANs cannot. Here are the most important benefits of using VXLANs:

- You can theoretically create as many as 16 million VXLANs in an administrative domain (as opposed to 4094 VLANs on a Juniper Networks device).
  - MX Series routers and EX9200 switches support as many as 32,000 VXLANs, 32,000 multicast groups, and 8000 virtual tunnel endpoints (VTEPs). This means that VXLANs based on MX Series routers provide network segmentation at the scale required by cloud builders to support very large numbers of tenants.
  - QFX10000 Series switches support 4000 VXLANs and 2000 remote VTEPs.
  - QFX5100, QFX5110, QFX5200, QFX5210, and EX4600 switches support 4000 VXLANs, 4000 multicast groups, and 2000 remote VTEPs.
- You can enable migration of virtual machines between servers that exist in separate Layer 2 domains by tunneling the traffic over Layer 3 networks. This functionality allows you to dynamically allocate resources within or between data centers without being constrained by Layer 2 boundaries or being forced to create large or geographically stretched Layer 2 domains.

Using VXLANs to create smaller Layer 2 domains that are connected over a Layer 3 network means that you do not need to use Spanning Tree Protocol (STP) to converge the topology but can use more robust routing protocols in the Layer 3 network instead. In the absence of STP, none of your links are blocked, which means you can get full value from all the ports that you purchase. Using routing protocols to connect your Layer 2 domains also allows you to load-balance the traffic to ensure that you get the best use of your available bandwidth. Given the amount of east-west traffic that often flows

 Copyright © 2018, Juniper Networks, Inc.

within or between data centers, maximizing your network performance for that traffic is very important.

The video *Why Use an Overlay Network in a Data Center?* presents a brief overview of the advantages of using VXLANs.

Video: Why Use an Overlay Network in a Data Center?

How Does VXLAN Work?

VXLAN is often described as an overlay technology because it allows you to stretch Layer 2 connections over an intervening Layer 3 network by encapsulating (tunneling) Ethernet frames in a VXLAN packet that includes IP addresses. Devices that support VXLANs are called *virtual tunnel endpoints (VTEPs)*—they can be end hosts or network switches or routers. VTEPs encapsulate VXLAN traffic and de-encapsulate that traffic when it leaves the VXLAN tunnel. To encapsulate an Ethernet frame, VTEPs add a number of fields, including the following fields:

- Outer media access control (MAC) destination address (MAC address of the tunnel endpoint VTEP)
- Outer MAC source address (MAC address of the tunnel source VTEP)
- Outer IP destination address (IP address of the tunnel endpoint VTEP)
- Outer IP source address (IP address of the tunnel source VTEP)
- Outer UDP header
- A VXLAN header that includes a 24-bit field—called the *VXLAN network identifier (VNI)*—that is used to uniquely identify the VXLAN. The VNI is similar to a VLAN ID, but having 24 bits allows you to create many more VXLANs than VLANs.

NOTE: **Because VXLAN adds 50 to 54 bytes of additional header information to the original Ethernet frame, you might want to increase the MTU of the underlying network. In this case, configure the MTU of the physical interfaces that participate in the VXLAN network, not the MTU of the logical VTEP source interface, which is ignored.**

Figure 3 on page 8 shows the VXLAN packet format.

Copyright © 2018, Juniper Networks, Inc.

Figure 3: VXLAN Packet Format

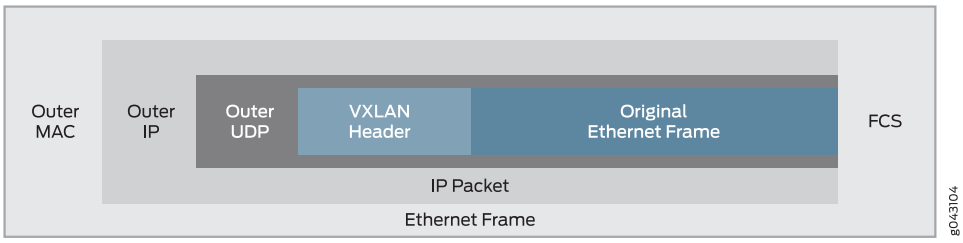

VXLAN Implementation Methods

Junos OS supports implementing VXLANs in the following environments:

- Manual VXLAN—In this environment, a Juniper Networks device acts as a transit device for downstream devices acting as VTEPs, or a gateway that provides connectivity for downstream servers that host virtual machines (VMs), which communicate over a Layer 3 network. In this environment, software-defined networking (SDN) controllers are not deployed.

  NOTE: **QFX10000 switches do not support manual VXLANs.**

- OVSDB-VXLAN—In this environment, SDN controllers use the Open vSwitch Database (OVSDB) management protocol to provide a means through which controllers (such as a VMware NSX or Juniper Networks Contrail controller) and Juniper Networks devices that support OVSDB can communicate.
- EVPN-VXLAN—In this environment, Ethernet VPN (EVPN) is a control plane technology that enables hosts (physical servers and VMs) to be placed anywhere in a network and remain connected to the same logical Layer 2 overlay network, and VXLAN creates the data plane for the Layer 2 overlay network.

Using QFX5100, QFX5110, QFX5200, QFX5210, and EX4600 Switches with VXLANs

You can configure the switches to perform all of the following roles:

- In an environment without an SDN controller, act as a transit Layer 3 switch for downstream hosts acting as VTEPs. In this configuration, you do not need to configure any VXLAN functionality on the switch. You do need to configure IGMP and PIM so that the switch can form the multicast trees for the VXLAN multicast groups. (See Manual VXLANs Require PIM on page 11 for more information.)
- In an environment with or without an SDN controller, act as a Layer 2 gateway between virtualized and nonvirtualized networks in the same data center or between data centers. For example, you can use the switch to connect a network that uses VXLANs to one that uses VLANs.
- Act as a Layer 2 gateway between virtualized networks in the same or different data centers and allow virtual machines to move (VMotion) between those networks and

Copyright © 2018, Juniper Networks, Inc.

data centers. For example, if you want to allow VMotion between devices in two different networks, you can create the same VLAN in both networks and put both devices on that VLAN. The switches connected to these devices, acting as VTEPs, can map that VLAN to the same VXLAN, and the VXLAN traffic can then be routed between the two networks.

- (QFX5110 switches with EVPN-VXLAN) Act as a Layer 3 gateway to route traffic between different VXLANs in the same data center.
- (QFX5110 switches with EVPN-VXLAN) Act as a Layer 3 gateway to route traffic between different VXLANs in different data centers over a WAN or the Internet using standard routing protocols or virtual private LAN service (VPLS) tunnels.

NOTE: **If you want a QFX5110 switch to be a Layer 3 VXLAN gateway in an EVPN-VXLAN environment, you must configure integrated routing and bridging (IRB) interfaces to connect the VXLANs, just as you do if you want to route traffic between VLANs.**

Because the additional headers add 50 to 54 bytes, you might need to increase the MTU on a VTEP to accommodate larger packets. For example, if the switch is using the default MTU value of 1514 bytes and you want to forward 1500-byte packets over the VXLAN, you need to increase the MTU to allow for the increased packet size caused by the additional headers.

Changing the UDP Port on QFX5100, QFX5110, QFX5200, QFX5210, and EX4600 Switches

Starting with Junos OS Release 14.1X53-D25 on QFX5100 switches, Junos OS Release 15.1X53-D210 on QFX5110 and QFX5200 switches, Junos OS Release 18.1R1 on QFX5210 switches, and Junos OS Release 18.2R1 on EX4600 switches, you can configure the UDP port used as the destination port for VXLAN traffic. To configure the VXLAN destination port to be something other than the default UDP port of 4789, enter the following statement:

set protocols l2-learning destination-udp-port *port-number*

The port you configure will be used for all VXLANs configured on the switch.

NOTE: **If you make this change on one switch in a VXLAN, you must make the same change on all the devices that terminate the VXLANs configured on your switch. If you do not do so, traffic will be disrupted for all the VXLANs configured on your switch. When you change the UDP port, the previously learned remote VTEPs and remote MACs are lost and VXLAN traffic is disrupted until the switch relearns the remote VTEPs and remote MACs.**

Controlling Transit Multicast Traffic on QFX5100, QFX5110, QFX5200, QFX5210, and EX4600 Switches

When the switch acting as a VTEP receives a broadcast, unknown unicast, or multicast packet, it performs the following actions on the packet:

1. It de-encapsulates the packet and delivers it to the locally attached hosts.

2. It then adds the VXLAN encapsulation again and sends the packet to the other VTEPs in the VXLAN.

These actions are performed by the loopback interface used as the VXLAN tunnel address and can, therefore, negatively impact the bandwidth available to the VTEP. Starting with Junos OS Release 14.1X53-D30 for QFX5100 switches, Junos OS Release 15.1X53-D210 for QFX5110 and QFX5200 switches, Junos OS Release 18.1R1 for QFX5210 switches, and Junos OS Release 18.2R1 for EX4600 switches, if you know that there are no multicast receivers attached to other VTEPs in the VXLAN that want traffic for a specific multicast group, you can reduce the processing load on the loopback interface by entering the following statement:

set protocols l2-learning disable-vxlan-multicast-transit vxlan-multicast-group *multicast-group*

In this case, no traffic will be forwarded for the specified group but all other multicast traffic will be forwarded. If you do not want to forward any multicast traffic to other VTEPs in the VXLAN, enter the following statement:

set protocols l2-learning disable-vxlan-multicast-transit vxlan-multicast-group all

Using an MX Series Router, EX9200 Switch, or QFX10000 Switch as a VTEP

You can configure an MX Series router, EX9200 switch, or QFX10000 switch to act as a VTEP and perform all of the following roles:

- Act as a Layer 2 gateway between virtualized and nonvirtualized networks in the same data center or between data centers. For example, you can use an MX Series router to connect a network that uses VXLANs to one that uses VLANs.
- Act as a Layer 2 gateway between virtualized networks in the same or different data centers and allow virtual machines to move (VMotion) between those networks and data centers.
- Act as a Layer 3 gateway to route traffic between different VXLANs in the same data center.
- Act as a Layer 3 gateway to route traffic between different VXLANs in different data centers over a WAN or the Internet using standard routing protocols or virtual private LAN service (VPLS) tunnels.

 Copyright © 2018, Juniper Networks, Inc.

NOTE: If you want one of the devices described in this section to be a VXLAN Layer 3 gateway, you must configure integrated routing and bridging (IRB) interfaces to connect the VXLANs, just as you do if you want to route traffic between VLANs.

Manual VXLANs Require PIM

In an environment with a controller (such as a VMware NSX or Juniper Networks Contrail controller), you can provision VXLANs on a Juniper Networks device. A controller also provides a control plane that VTEPs use to advertise their reachability and learn about the reachability of other VTEPs. You can also manually create VXLANs on Juniper Networks devices instead of using a controller. If you use this approach, you must also configure Protocol Independent Multicast (PIM) on the VTEPs so that they can create VXLAN tunnels between themselves.

You must also configure each VTEP in a given VXLAN to be a member of the same multicast group. (If possible, you should assign a different multicast group address to each VXLAN, although this is not required. Multiple VXLANs can share the same multicast group.) The VTEPs can then forward ARP requests they receive from their connected hosts to the multicast group. The other VTEPs in the group de-encapsulate the VXLAN information, and (assuming they are members of the same VXLAN) they forward the ARP request to their connected hosts. When the target host receives the ARP request, it responds with its MAC address, and its VTEP forwards this ARP reply back to the source VTEP. Through this process, the VTEPs learn the IP addresses of the other VTEPs in the VXLAN and the MAC addresses of the hosts connected to the other VTEPs.

The multicast groups and trees are also used to forward broadcast, unknown unicast, and multicast (BUM) traffic between VTEPs. This prevents BUM traffic from being unnecessarily flooded outside the VXLAN.

NOTE: Multicast traffic that is forwarded through a VXLAN tunnel is sent only to the remote VTEPs in the VXLAN. That is, the encapsulating VTEP does not copy and send copies of the packets according to the multicast tree—it only forwards the received multicast packets to the remote VTEPs. The remote VTEPs de-encapsulate the encapsulated multicast packets and forward them to the appropriate Layer 2 interfaces.Junos OS Release 18.1R1 for QFX5210 switches

Load Balancing VXLAN Traffic

On QFX5100, QFX5110, QFX5200, QFX5210, and EX4600 switches, the Layer 3 routes that form VXLAN tunnels use per-packet load balancing by default, which means that load balancing is implemented if there are ECMP paths to the remote VTEP. This is different from normal routing behavior in which per-packet load balancing is not used by default. (Normal routing uses per-prefix load balancing by default.)

Copyright © 2018, Juniper Networks, Inc.

The source port field in the UDP header is used to enable ECMP load balancing of the VXLAN traffic in the Layer 3 network. This field is set to a hash of the inner packet fields, which results in a variable that ECMP can use to distinguish between tunnels (flows). (None of the other fields that flow-based ECMP normally uses are suitable for use with VXLANs. All tunnels between the same two VTEPs have the same outer source and destination IP addresses, and the UDP destination port is set to port 4789 by definition. Therefore, none of these fields provide a sufficient way for ECMP to differentiate flows.)

VLAN IDs for VXLANs

When configuring a VLAN ID for a VXLAN on any Juniper Networks device that supports VXLANs except QFX10000 switches, we strongly recommend using a VLAN ID of 3 or higher. If you use a VLAN ID of 1 or 2, replicated broadcast, multicast, and unknown unicast (BUM) packets for these VXLANs might be untagged, which in turn might result in the packets being dropped by a device that receives the packets.

Release History Table

Release	Description
14.1X53-D30	Starting with Junos OS Release 14.1X53-D30 for QFX5100 switches, Junos OS Release 15.1X53-D210 for QFX5110 and QFX5200 switches, Junos OS Release 18.1R1 for QFX5210 switches, and Junos OS Release 18.2R1 for EX4600 switches, if you know that there are no multicast receivers attached to other VTEPs in the VXLAN that want traffic for a specific multicast group, you can reduce the processing load on the loopback interface
14.1X53-D25	Starting with Junos OS Release 14.1X53-D25 on QFX5100 switches, Junos OS Release 15.1X53-D210 on QFX5110 and QFX5200 switches, Junos OS Release 18.1R1 on QFX5210 switches, and Junos OS Release 18.2R1 on EX4600 switches, you can configure the UDP port used as the destination port for VXLAN traffic.

Related Documentation

- Examples: Manually Configuring VXLANs on QFX Series and EX4600 Switches on page 73
- *Understanding EVPN with VXLAN Data Plane Encapsulation*
- OVSDB Support on Juniper Networks Devices on page 16
- *mtu*

VXLAN Constraints on QFX Series and EX4600 Switches

When configuring Virtual Extensible LANs (VXLANs) on QFX Series and EX4600 switches, be aware of the constraints described in the following sections. In these sections, “Layer 3 side” refers to a network-facing interface that performs VXLAN encapsulation and de-encapsulation, and “Layer 2 side” refers to a server-facing interface that is a member of a VLAN that is mapped to a VXLAN.

- VXLAN Constraints on QFX5100, QFX5110, QFX5200, QFX5210, and EX4600 Switches on page 13
- VXLAN Constraints on QFX10000 Switches on page 14

 Copyright © 2018, Juniper Networks, Inc.

VXLAN Constraints on QFX5100, QFX5110, QFX5200, QFX5210, and EX4600 Switches

- (QFX5100 switches only) You can use VXLANs on a Virtual Chassis or Virtual Chassis Fabric (VCF) if all of the members are supported QFX5100 switches. You cannot use VXLANs if any of the members is not a supported QFX5100 switch.
- (EX4600 switches only) You can use VXLANs on a Virtual Chassis if all of the members are supported EX4600 switches. You cannot use VXLANs if any of the members is not a supported EX4600 switch.
- (QFX5100, QFX5110, QFX5200, QFX5210, and EX4600 switches) VXLAN configuration is supported only in the default-switch routing instance.
- (QFX5100, QFX5200, QFX5210, and EX4600 switches) Routing traffic between different VXLANs is not supported.
- (QFX5110 switches only) By default, routing traffic between a VXLAN and a Layer 3 logical interface—for example, an interface configured with the **set interfaces *interface-name* unit *logical-unit-number* family inet address *ip-address/prefix-length*** command—is disabled. If this routing functionality is required in your EVPN-VXLAN network, you can perform some additional configuration to make it work. For more information, see *How to Configure VXLANs on QFX5110 Switches and Layer 3 Logical Interfaces to Interoperate*.
- (QFX5110 switches only) Integrated routing and bridging (IRB) interfaces used in EVPN-VXLAN overlay networks do not support routing protocols such as OSPF, IS-IS, and BGP.
- (EX4600 switches only) A physical interface cannot be a member of a VLAN and a VXLAN. That is, an interface that performs VXLAN encapsulation and de-encapsulation cannot also be a member of a VLAN. For example, if a VLAN that is mapped to a VXLAN is a member of trunk port xe-0/0/0, any other VLAN that is a member of xe-0/0/0 must also be assigned to a VXLAN.
- Multichassis link aggregation groups (MC-LAGs) are not supported with VXLAN.

  NOTE: **In an EVPN-VXLAN environment, EVPN multihoming active-active mode is used instead of MC-LAG for redundant connectivity between hosts and leaf devices.**

- IP fragmentation and defragmentation are not supported on the Layer 3 side.
- The following features are not supported on the Layer 2 side:
  - (QFX5100, QFX5200, QFX5210, and EX4600 switches) IGMP snooping with EVPN-VXLAN.
  - Redundant trunk groups (RTGs).
  - The ability to shut down a Layer 2 interface or temporarily disable the interface when a storm control level is exceeded is not supported.
  - STP (any variant).

- Access port security features are not supported with VXLAN. For example, the following features are not supported:
  - DHCP snooping.
  - Dynamic ARP inspection.
  - MAC limiting and MAC move limiting.

  NOTE: An exception to this constraint is that MAC limiting is supported on OVSDB-managed interfaces in an OVSDB-VXLAN environment with Contrail controllers. For more information, see *Features Supported on OVSDB-Managed Interfaces*.

- Ingress node replication is not supported in the following cases:
  - When PIM is used for the control plane (manual VXLAN).
  - When an SDN controller is used for the control plane (OVSDB-VXLAN).

  Ingress node replication is supported with EVPN-VXLAN.
- PIM-BIDIR and PIM-SSM are not supported with VXLANs.
- If you configure a port-mirroring instance to mirror traffic exiting from an interface that performs VXLAN encapsulation, the source and destination MAC addresses of the mirrored packets are invalid. The original VXLAN traffic is not affected.
- When configuring a VLAN ID for a VXLAN, we strongly recommend using a VLAN ID of 3 or higher. If you use a VLAN ID of 1 or 2, replicated broadcast, multicast, and unknown unicast (BUM) packets for these VXLANs might be untagged, which in turn might result in the packets being dropped by a device that receives the packets.
- (QFX5110 switches only) VLAN firewall filters are not supported on IRB interfaces on which EVPN-VXLAN is enabled.
- (QFX5100, QFX5100 Virtual Chassis, and QFX5110 switches) Firewall filters and policers are not supported on transit traffic on which EVPN-VXLAN is enabled. They are supported only in the ingress direction on CE-facing interfaces.
- (QFX5100, QFX5100 Virtual Chassis, and QFX5110 switches) For IRB interfaces in an EVPN-VXLAN one-layer IP fabric, firewall filtering and policing is supported only at the ingress point of non-encapsulated frames routed through the IRB interface.

VXLAN Constraints on QFX10000 Switches

- MC-LAGs are not supported with VXLAN.

  NOTE: In an EVPN-VXLAN environment, EVPN multihoming active-active mode is used instead of MC-LAG for redundant connectivity between hosts and leaf devices.

- IP fragmentation is not supported on the Layer 3 side.

Copyright © 2018, Juniper Networks, Inc.

- The following features are not supported on the Layer 2 side:
  - IGMP snooping with EVPN-VXLAN in Junos OS Releases before Junos OS Release 17.2R1.
  - STP (any variant).
- Access port security features are not supported with VXLAN. For example, the following features are not supported:
  - DHCP snooping.
  - Dynamic ARP inspection.
  - MAC limiting and MAC move limiting.
- Ingress node replication is not supported when an SDN controller is used for the control plane (OVSDB-VXLAN). Ingress node replication is supported for EVPN-VXLAN.
- QFX10000 switches that are deployed in an EVPN-VXLAN environment do not support an IPv6 physical underlay network.
- When the next-hop database on a QFX10000 switch includes next hops for both the underlay network and the EVPN-VXLAN overlay network, the next hop to a VXLAN peer cannot be an Ethernet segment identifier (ESI) or a virtual tunnel endpoint (VTEP) interface.
- IRB interfaces used in EVPN-VXLAN overlay networks do not support the IS-IS routing protocol.
- VLAN firewall filters applied to IRB interfaces on which EVPN-VXLAN is enabled.
- Filter-based forwarding (FBF) is not supported on IRB interfaces used in an EVPN-VXLAN environment.

Related Documentation

- Understanding VXLANs on page 5
- Examples: Manually Configuring VXLANs on QFX Series and EX4600 Switches on page 73
- Manually Configuring VXLANs on QFX Series and EX4600 Switches on page 71

Understanding the OVSDB Protocol Running on Juniper Networks Devices

The Juniper Networks Junos OS implementation of the Open vSwitch Database (OVSDB) management protocol provides a means through which Juniper Networks devices that support OVSDB can communicate with software-defined networking (SDN) controllers. Juniper Networks devices exchange control and statistical information with the SDN controllers, thereby enabling virtual machine (VM) traffic from the entities in a virtualized network to be forwarded to entities in a physical network and vice versa.

The Junos OS implementation of OVSDB includes an OVSDB server and an OVSDB client, both of which run on each Juniper Networks device that supports OVSDB.

The OVSDB server on a Juniper Networks device can communicate with an OVSDB client on an SDN controller. To establish a connection between a Juniper Networks device and an SDN controller, you must specify information about the SDN controller (IP address) and the connection (port over which the connection occurs and the communication protocol to be used) on each Juniper Networks device. After the configuration is successfully committed, the connection is established between the management port of the Juniper Networks device and the SDN controller port that you specify in the Junos OS configuration.

The OVSDB server stores and maintains an OVSDB database schema, which is defined for physical devices. This schema contains control and statistical information provided by the OVSDB client on the Juniper Networks devices and on SDN controllers. This information is stored in various tables in the schema. The OVSDB client monitors the schema for additions, deletions, and modifications to this information, and the information is used for various purposes, such as learning the media access control (MAC) addresses of virtual hosts and physical servers.

The schema provides a means through which the Juniper Networks devices and the SDN controllers can exchange information. For example, the Juniper Networks devices capture MAC routes to entities in the physical network and push this information to a table in the schema so that SDN controllers with connections to these Juniper Networks devices can access the MAC routes. Conversely, SDN controllers capture MAC routes to entities in the virtualized network and push this information to a table in the schema so that Juniper Networks devices with connections to the SDN controllers can access the MAC routes.

Some of the OVSDB table names include the words *local* or *remote*, for example, *unicast MACs local table* and *unicast MACs remote table*. Information in *local* tables is learned by a Juniper Networks device that functions as a hardware virtual tunnel endpoint (VTEP), while information in *remote* tables is learned from other software or hardware VTEPs.

OVSDB Support on Juniper Networks Devices

The following Juniper Networks devices support the Open vSwitch Database (OVSDB) management protocol:

- EX9200 Line of Ethernet Switches
- MX80, MX104, MX240, MX480, MX960, MX2010, and MX2020 Universal Routing Platforms
- QFX Series Switches

Starting with Junos OS Release 14.1X53-D30 for QFX5100 switches, 15.1X53-D20 for QFX10002 switches, 15.1X53-D30 for QFX10008 switches, 15.1X53-D60 for QFX10016 switches, 15.1X53-D210 for QFX5110 and QFX5200 switches, 16.1R1 for EX9200 switches and MX routers, and 18.1R1 for QFX5210 switches, the OVSDB software (jsdn) package is included in the Junos OS software (jinstall) package. As a result, if you have one of the listed releases or a later release, you no longer need to Install the separate jsdn package on the Juniper Networks devices.

 Copyright © 2018, Juniper Networks, Inc.

Release History Table

Release	Description
14.1X53-D30	Starting with Junos OS Release 14.1X53-D30 for QFX5100 switches, 15.1X53-D20 for QFX10002 switches, 15.1X53-D30 for QFX10008 switches, 15.1X53-D60 for QFX10016 switches, 15.1X53-D210 for QFX5110 and QFX5200 switches, 16.1R1 for EX9200 switches and MX routers, and 18.1R1 for QFX5210 switches, the OVSDB software (jsdn) package is included in the Junos OS software (jinstall) package. As a result, if you have one of the listed releases or a later release, you no longer need to Install the separate jsdn package on the Juniper Networks devices.

OVSDB Schema for Physical Devices

An Open vSwitch Database (OVSDB) server runs on a Juniper Networks device that supports the OVSDB management protocol. When this device is connected to one or more SDN controllers, the connections provide a means through which the Juniper Networks device and the SDN controllers can communicate.

Juniper Networks devices that support OVSDB and SDN controllers exchange control and statistical data. This data is stored in the OVSDB database schema defined for physical devices. The schema resides in the OVSDB server. The schema includes several tables. Juniper Networks devices and SDN controllers, both of which have OVSDB clients, can add rows to the tables as well as monitor the tables for the addition, deletion, and modification of rows.

For example, the OVSDB client on a Juniper Networks device and an SDN controller can collect MAC routes learned by entities in the physical or virtualized networks, respectively, and publish the routes to the appropriate table in the schema. By using the MAC routes and other information provided in the table, Juniper Networks devices in the physical network and entities in the virtualized network can determine where to forward virtual machine (VM) traffic.

Some of the OVSDB table names include the words *local* or *remote*—for example, the *unicast MACs local table* and the *unicast MACs remote table*. Information in *local* tables is learned by a Juniper Networks device that functions as a hardware virtual tunnel endpoint (VTEP), whereas information in *remote* tables is learned by other software or hardware VTEPs.

Table 4 on page 17 describes the tables in the schema, the physical or virtual entity that is the source of the data provided in the table, and the command that you can enter in the CLI of the Juniper Networks device to get similar information.

Table 4: OVSDB Schema Tables

Table Name	Description	Source of Information	Command
Global table	Includes the top-level configuration for the Juniper Networks device.	Juniper Networks device	–

Table 4: OVSDB Schema Tables (continued)

Table Name	Description	Source of Information	Command
Manager table	Includes information about each SDN controller that is connected to the Juniper Networks device.	Juniper Networks device	show ovsdb controller
Physical switch table	Includes information about a Juniper Networks device that functions as a hardware VTEP. This table includes information only for the device on which the table resides.	Juniper Networks device	–
Physical port table	Includes information about OVSDB-managed interfaces.	Juniper Networks device	show ovsdb interface
Logical switch table	Includes the following information: • Logical switches, which you configured in a VMware NSX environment, or virtual networks, which you configured in a Contrail environment. • The equivalent VXLANs, which were configured on the Juniper Networks device.	• SDN controller • Juniper Networks device	show ovsdb logical-switch
Logical binding statistics table	Includes statistics for OVSDB-managed interfaces.	Juniper Networks device	show ovsdb statistics interface
Physical locator table	Includes information about Juniper Networks devices configured as hardware VTEPs, software VTEPs, and service nodes in an NSX environment.	Juniper Networks device	show ovsdb virtual-tunnel-end-point
Physical locator set table	Includes a list of software VTEPs, service nodes, or top-of-rack service nodes (TSNs) for a logical switch.	Juniper Networks device	–
Unicast MACs remote table	Reachability information, including unicast MAC addresses, for entities in the virtualized network.	SDN controller	show ovsdb mac
Unicast MACs local table	Reachability information, including unicast MAC addresses, for entities in the physical network.	Juniper Networks device	show ovsdb mac

Copyright © 2018, Juniper Networks, Inc.

Table 4: OVSDB Schema Tables (continued)

Table Name	Description	Source of Information	Command
Multicast MACs remote table	Includes only one row. In this row, the MAC column includes the keyword **unknown dst** along with a list of software VTEPs, service nodes, or TSNs, which handle multicast traffic.	SDN controller	show ovsdb mac
Multicast MACs local table	Includes one row for each logical switch. In this row, the MAC column includes the keyword **unknown dst** and a list of hardware VTEPs, which are identified by the IP address assigned to the hardware VTEP loopback interface (lo0). These hardware VTEPs can terminate or originate a VXLAN tunnel. The Multicast MACs local table is introduced in Junos OS Release 14.1X53-D25 for QFX5100 switches and in Junos OS Release 14.2R4 for MX Series routers and EX9200 switches. For all other QFX switches that support OVSDB, this table is present when OVSDB support is introduced.	Juniper Networks device	show ovsdb mac
Tunnel table	NOTE: Only the Juniper Networks switches that support OVSDB with BFD in turn support this table. Includes information about tunnels through which BFD control messages are transmitted between the hardware VTEP and entities that replicate and forward BUM packets (software VTEPs and service nodes) within an OVSDB-managed VXLAN. Using BFD, the hardware VTEP can determine which replicators are reachable.	Juniper Networks device	show ovsdb tunnels

Release History Table

Release	Description
14.1X53-D25	The Multicast MACs local table is introduced in Junos OS Release 14.1X53-D25 for QFX5100 switches and in Junos OS Release 14.2R4 for MX Series routers and EX9200 switches. For all other QFX switches that support OVSDB, this table is present when OVSDB support is introduced.

Related Documentation

- Understanding the OVSDB Protocol Running on Juniper Networks Devices on page 15
- Understanding How to Set Up OVSDB Connections on a Juniper Networks Device on page 36

Understanding How Layer 2 BUM and Layer 3 Routed Multicast Traffic Are Handled with OVSDB

The Juniper Networks Junos OS implementation of the Open vSwitch Database (OVSDB) management protocol provides a means through which software-defined networking (SDN) controllers and Juniper Networks devices that support OVSDB can communicate.

This topic explains how a Juniper Networks device with Virtual Extensible LAN (VXLAN) and OVSDB management protocol capabilities handles the following types of traffic:

- (This scenario applies to all Juniper Networks devices that support VXLAN and OVSDB.) Layer 2 broadcast, unknown unicast, and multicast (BUM) traffic that originates in an OVSDB-managed VXLAN and is forwarded to interfaces within the same VXLAN.

  NOTE: **You must explicitly configure the replication of unknown unicast traffic in a Contrail environment.**

- (This scenario applies only to Juniper Networks devices that can function as a Layer 3 VXLAN gateway in an OVSDB-VXLAN environment.) Layer 3 multicast traffic that is received by an integrated routing and bridging (IRB) interface in an OVSDB-managed VXLAN and is forwarded to interfaces in another OVSDB-managed VXLAN.

By default, Layer 2 BUM traffic that originates in an OVSDB-managed VXLAN is handled by one or more software virtual tunnel endpoints (VTEPs), service nodes, or top-of-rack service nodes (TSNs) in the same VXLAN. (In this topic, software VTEPs, service nodes, and TSNs are known collectively as *replicators*.) The table for remote multicast media access control (MAC) addresses in the OVSDB schema for physical devices contains only one entry that has the keyword **unknown-dst** as the MAC string and a list of replicators.

Given the previously described table entry, Layer 2 BUM traffic received on an interface in the OVSDB-managed VXLAN is forwarded to one of the replicators. The replicator to which a BUM packet is forwarded is determined by the Juniper Networks device on which the OVSDB-managed VXLAN is configured. On receiving the BUM packet, the entity replicates the packet and forwards the replicas to all interfaces within the VXLAN.

Copyright © 2018, Juniper Networks, Inc.

Instead of using replicators, you can optionally enable ingress node replication to handle Layer 2 BUM traffic on Juniper Networks devices that support OVSDB.

NOTE: **Ingress node replication is supported on all Juniper Networks devices that support OVSDB except the QFX Series switches.**

With ingress node replication enabled, on receiving a Layer 2 BUM packet on an interface in an OVSDB-managed VXLAN, the Juniper Networks device replicates the packet and then forwards the replicas to all software VTEPs included in the unicast MACs remote table in the OVSDB schema. The software VTEPs then forward the replicas to all virtual machines (VMs), except service VMs, or nodes, on the same host.

NOTE: **When Juniper Networks devices replicate Layer 2 BUM packets to a large number of remote software VTEPs, the performance of the Juniper Networks devices can be impacted.**

On IRB interfaces that forward Layer 3 multicast traffic from one OVSDB-managed VXLAN to another, ingress node replication is automatically implemented. With ingress node replication, the Juniper Networks device replicates a Layer 3 multicast packet and then the IRB interface forwards the replicas to all hardware and software VTEPs, but not to service nodes, in the other OVSDB-managed VXLAN. For the routing of Layer 3 multicast traffic from one OVSDB-managed VXLAN to another, ingress node replication is the only option and does not need to be configured.

Related Documentation

- *Configuring OVSDB-Managed VXLANs*
- Understanding BFD in a VMware NSX Environment with OVSDB and VXLAN on page 21

Understanding BFD in a VMware NSX Environment with OVSDB and VXLAN

Within a Virtual Extensible LAN (VXLAN) managed by the Open vSwitch Database (OVSDB) protocol, by default, Layer 2 broadcast, unknown unicast, and multicast (BUM) traffic is replicated and forwarded by one or more software virtual tunnel endpoints (VTEPs) or service nodes in the same VXLAN. (In this topic, software VTEPs and service nodes are known collectively as *replicators*.)

To prevent a Juniper Networks switch that functions as a hardware VTEP in a VMware NSX environment from forwarding BUM packets to a non-functional replicator, starting in Junos OS Release 14.1X53-D40 for QFX5100 switches and 18.1R1 for QFX5110, QFX5200, and QFX5210 switches, these switches can use the Bidirectional Forwarding Detection (BFD) protocol.

By exchanging BFD control messages with replicators at regular intervals, the hardware VTEP can monitor the replicators to ensure that they are functioning and are, therefore, reachable. If the replicator does not respond to three BFD control messages, the BFD

status of the replicators is considered to be down. The hardware VTEP does not forward BUM packets to a replicator with a BFD status of down.

To monitor the status of the replicators, the hardware VTEP, NSX controllers, and replicators must all be BFD-capable. In addition, the NSX controller must enable BFD on the hardware VTEP and replicators. When the NSX controller has enabled BFD on the hardware VTEP and replicators, their BFD status is considered to be enabled. If the NSX controller cannot enable BFD on these entities (for example, the entity is not BFD-capable), their BFD status is considered to be disabled.

With the BFD protocol enabled on a hardware VTEP, upon receipt of a BUM packet on an OVSDB-managed interface, the hardware VTEP can choose one of the functioning replicators to handle the packet.

When the hardware VTEP and a replicator exchange BFD control messages, the packets are encapsulated and transported through a VXLAN tunnel. The hardware VTEP and the NSX controller to which it is connected collect Information about this tunnel, such as source and destination IP addresses, the status of the BFD protocol, the status of the tunnel, and so on. The hardware VTEP and NSX controller push their collected information to the tunnel table in the OVSDB schema.

To view the tunnel information collected by the hardware VTEP, you can use the **show ovsdb tunnels** command. This command can help you to determine when there is an issue with the BFD protocol or a replicator.

The VXLAN packet format for BFD control messages is different from the format used for data packets. Moving from the inner part of the packet to the outer, the differences are as follows:

- Addition of UDP port header—UDP port 3784.
- Addition of IP header—Source and destination IP addresses of the devices at the end of each tunnel.
- Addition of Ethernet header—Source and destination MAC addresses of the devices at the end of each tunnel.
- VXLAN—VXLAN network identifier (VNI) of 0.

Figure 4 on page 22 shows the VXLAN packet format for BFD control messages.

Figure 4: VXLAN Packet Format for BFD Control Messages

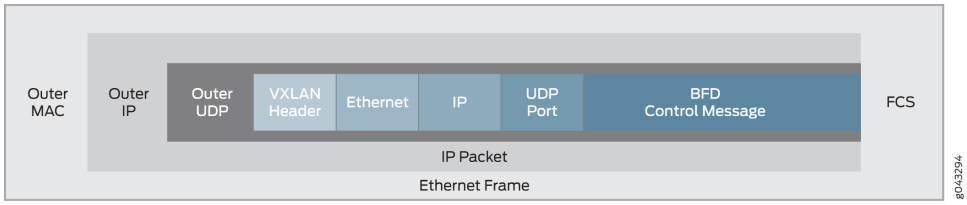

Copyright © 2018, Juniper Networks, Inc.

Release History Table

Release	Description
14.1X53-D40	To prevent a Juniper Networks switch that functions as a hardware VTEP in a VMware NSX environment from forwarding BUM packets to a non-functional replicator, starting in Junos OS Release 14.1X53-D40 for QFX5100 switches and 18.1R1 for QFX5110, QFX5200, and QFX5210 switches, these switches can use the Bidirectional Forwarding Detection (BFD) protocol.

Related Documentation

- Understanding How Layer 2 BUM and Layer 3 Routed Multicast Traffic Are Handled with OVSDB on page 20
- OVSDB Schema for Physical Devices on page 17
- **show ovsdb tunnels on page 144**

Understanding Overlay ping and traceroute Packet Support

In a virtualized overlay network, existing ping and traceroute mechanisms do not provide enough information to determine whether or not connectivity is established throughout the network. The existing **ping** and **traceroute** commands can only verify the basic connectivity between two endpoints in the underlying physical network, but not in the overlay network. For example, you can issue the existing **ping** command on a Juniper Networks device that functions as a virtual tunnel endpoint (VTEP) to another Juniper Networks devices that also functions as a VTEP in a Virtual Extensible LAN (VXLAN) overlay. In this situation, the ping output might indicate that the connection between the source and destination VTEPs is up and running despite the fact that one of the endpoints (physical servers upon which applications directly run) is not reachable.

Starting with Junos OS Release 14.1X53-D30 for QFX5100 switches, Release 16.1 for EX9200 switches, and Release 16.2 for MX Series routers, overlay ping and traceroute are introduced as troubleshooting tools for overlay networks.

For ping and traceroute mechanisms to work in overlay networks, the ping and traceroute packets, also referred to collectively as Operations, Administration, and Management (OAM) packets, must be encapsulated with the same VXLAN UDP headers (outer headers) as the data packets forwarded over the overlay segment. This implementation ensures that transit nodes forward the OAM packets in the same way as a data packet for that particular overlay segment.

If any connectivity issues arise for a particular data flow, the overlay OAM packet corresponding to the flow would experience the same connectivity issues as the data packet for that flow.

When using ping overlay and traceroute overlay, keep the following in mind:

- The only tunnel type supported is VXLAN tunnels.

- The VTEPs in the overlay network that send and receive the overlay ping packets must be Juniper Networks devices that support overlay ping and traceroute.

- Overlay ping and traceroute Functionality on page 24
- Overlay OAM Packet Format for UDP Payloads on page 24

Overlay ping and traceroute Functionality

Overlay ping and traceroute packets are sent as User Datagram Protocol (UDP) echo requests and replies and are encapsulated in the VXLAN header. VTEPs, which initiate and terminate overlay tunnels, send and receive overlay OAM packets. Overlay ping and traceroute are supported only in VXLAN overlay networks in which the sending and receiving VTEPs are both Juniper Networks devices.

The overlay ping functionality validates both the data plane and the MAC address and IP address of the VTEPs. This additional validation is different from the more commonly known IP ping functionality where the actual destination replies to the echo request without the overlay segment context.

While tracing a route in a VXLAN overlay network, Juniper Networks devices that are along the route that support overlay traceroute additionally provide a timestamp. Third-party devices and Juniper Networks devices that do not support overlay traceroute do not provide this timestamp.

Overlay OAM Packet Format for UDP Payloads

The format of overlay OAM packets depends on the type of payload that is carried in the tunnel. In the case of VXLAN tunnels, the inner packet is a Layer 2 packet.

NOTE: **Only Layer 2 UDP payloads are supported.**

Figure 5 on page 24 shows complete headers on a VXLAN-encapsulated overlay OAM packet.

Figure 5: VXLAN-Encapsulated Overlay OAM Packet

- Outer Ethernet header—Contains the source MAC (SMAC) and destination MAC (DMAC) addresses of directly connected nodes in the physical network. These addresses change at every hop.
- Outer IP header—Contains the source and destination IP addresses of the Juniper Networks devices that function as the VTEPs that initiate and terminate the tunnel.
- Outer UDP header—Contains the source port associated with the flow entropy and destination port. The source port is an internally calculated hash value. The destination port is the standard UDP port (4789) used for VXLAN.

Copyright © 2018, Juniper Networks, Inc.

- VXLAN header—Contains the VXLAN Network Identifier (VNI) or the segment ID of the VXLAN, and new router alert (RA) flag bits.
- Inner Ethernet header—Contains a control MAC address (00-00-5E-90-*xx*-*xx*) for both the SMAC and DMAC. This address is not forwarded out of the VTEP. Alternatively, the SMAC can be set to a non-control MAC address. However, if a non-control MAC address is used, the VTEP must not learn the SMAC from the overlay OAM packets.
- Inner IP header—Contains the source IP address that can be set to the IP address of the endpoint or source VTEP. The destination IP address can be set to the 127/8 address, which ensures that the overlay OAM packet is not forwarded out of the ports of the Juniper Networks device that is configured as a VTEP.
- Inner UDP header—Contains a new reserved value used in the destination port field in the inner UDP header. This value identifies the incoming UDP packet as an overlay OAM packet.
- Inner UDP payload—Contains all of the overlay OAM-specific message format and type, length, and value (TLV) definitions.

  The Inner UDP payload format is as follows:

```
 0                   1                   2                   3
 0 1 2 3 4 5 6 7 8 9 0 1 2 3 4 5 6 7 8 9 0 1 2 3 4 5 6 7 8 9 0 1
+-+-+-+-+-+-+-+-+-+-+-+-+-+-+-+-+-+-+-+-+-+-+-+-+-+-+-+-+-+-+-+-+
| Message Type  | Reply mode    | Return Code   | Return Subcode|
+-+-+-+-+-+-+-+-+-+-+-+-+-+-+-+-+-+-+-+-+-+-+-+-+-+-+-+-+-+-+-+-+
| Originator Handle                                             |
+-+-+-+-+-+-+-+-+-+-+-+-+-+-+-+-+-+-+-+-+-+-+-+-+-+-+-+-+-+-+-+-+
| Sequence Number                                               |
+-+-+-+-+-+-+-+-+-+-+-+-+-+-+-+-+-+-+-+-+-+-+-+-+-+-+-+-+-+-+-+-+
| TimeStamp Sent (seconds)                                      |
+-+-+-+-+-+-+-+-+-+-+-+-+-+-+-+-+-+-+-+-+-+-+-+-+-+-+-+-+-+-+-+-+
| TimeStamp Sent (microseconds)                                 |
+-+-+-+-+-+-+-+-+-+-+-+-+-+-+-+-+-+-+-+-+-+-+-+-+-+-+-+-+-+-+-+-+
| TimeStamp Received (seconds)                                  |
+-+-+-+-+-+-+-+-+-+-+-+-+-+-+-+-+-+-+-+-+-+-+-+-+-+-+-+-+-+-+-+-+
| TimeStamp Received (microseconds)                             |
+-+-+-+-+-+-+-+-+-+-+-+-+-+-+-+-+-+-+-+-+-+-+-+-+-+-+-+-+-+-+-+-+
| TLVs ...                                                      |
.                                                               .
.                                                               .
.                                                               .
|                                                               |
+-+-+-+-+-+-+-+-+-+-+-+-+-+-+-+-+-+-+-+-+-+-+-+-+-+-+-+-+-+-+-+-+
```

  The OAM-specific message type is one of the following:

```
Value What it means
----- -------------
1     Echo Request
2     Echo Reply

Reply Mode Values:-
Value What it means
----- ---------------------------------
1     Do not reply
```

```
2     Reply via an IPv4/IPv6 UDP Packet
3     Reply via Overlay Segment
```

The TLV definition for VXLAN ping is as follows:

```
0 1 2 3 4 5 6 7 8 9 0 1 2 3 4 5 6 7 8 9 0 1 2 3 4 5 6 7 8 9 0 1
+-+-+-+-+-+-+-+-+-+-+-+-+-+-+-+-+-+-+-+-+-+-+-+-+-+-+-+-+-+-+-+-+
| Type = 1(VXLAN ping IPv4)   | Length                        |
+-+-+-+-+-+-+-+-+-+-+-+-+-+-+-+-+-+-+-+-+-+-+-+-+-+-+-+-+-+-+-+-+
| VXLAN VNI                                     | Reserved     |
+-+-+-+-+-+-+-+-+-+-+-+-+-+-+-+-+-+-+-+-+-+-+-+-+-+-+-+-+-+-+-+-+
| IPv4 Sender Address                                           |
+-+-+-+-+-+-+-+-+-+-+-+-+-+-+-+-+-+-+-+-+-+-+-+-+-+-+-+-+-+-+-+-+
```

Release History Table

Release	Description
14.1X53-D30	Starting with Junos OS Release 14.1X53-D30 for QFX5100 switches, Release 16.1 for EX9200 switches, and Release 16.2 for MX Series routers, overlay ping and traceroute are introduced as troubleshooting tools for overlay networks.

Related Documentation

- Example: Troubleshooting a VXLAN Overlay Network By Using Overlay Ping and Traceroute on QFX Series Switches on page 91
- ping overlay on page 156
- traceroute overlay on page 201

PIM NSR and Unified ISSU Support for VXLAN Overview

Starting in Junos OS Release 16.2R1, Protocol Independent Multicast (PIM) nonstop active routing (NSR) support for Virtual Extensible LAN (VXLAN) is supported on MX Series routers.

The Layer 2 address learning daemon (l2ald) passes VXLAN parameters (VXLAN multicast group addresses and the source interface for a VXLAN tunnel [**vtep-source-interface**]) to the routing protocol process on the master Routing Engine. The routing protocol process forms PIM joins with the multicast routes through the pseudo-VXLAN interface based on these configuration details.

Because the l2ald daemon does not run on the backup Routing Engine, the configured parameters are not available to the routing protocol process in the backup Routing Engine when NSR is enabled. The PIM NSR mirroring mechanism provides the VXLAN configuration details to the backup Routing Engine, which enables creation of the required states. The routing protocol process matches the multicast routes on the backup Routing Engine with PIM states, which maintains the multicast routes in the Forwarding state.

In response to Routing Engine switchover, the multicast routes remain in the Forwarding state on the new master Routing Engine. This prevents traffic loss during Routing Engine

 Copyright © 2018, Juniper Networks, Inc.

switchover. When the l2ald process becomes active, it refreshes VXLAN configuration parameters to PIM.

NOTE: **For this feature, NSR support is available for VXLAN in PIM sparse mode.**

This feature does not introduce any new CLI commands. You can issue the following **show** commands on the backup Routing Engine to monitor the PIM joins and multicast routes on the backup Routing Engine:

- **show pim join extensive**
- **show multicast route extensive**

Unified ISSU Support

Starting in Junos OS Release 17.2 R1, unified in-service software upgrade is supported for VXLAN using PIM on MX Series routers. ISSU enables you to upgrade your Junos OS software on your MX Series router with no disruption on the control plane and with minimal disruption of traffic. Unified ISSU is supported only on dual Routing Engine platforms. The graceful Routing Engine switchover (GRES) and nonstop active routing (NSR) features must both be enabled. Unified ISSU allows you to eliminate network downtime, reduce operating costs, and deliver higher levels of services. See *Getting Started with Unified In-Service Software Upgrade*.

NOTE: **Unified ISSU is not supported on the QFX series switches.**

To enable GRES, include the **graceful-switchover** statement at the **[edit chassis redundancy]** hierarchy level.

To enable NSR, include the **nonstop-routing** statement at the **[edit routing-options]** hierarchy level and the **commit synchronize** statement at the **[edit system]** hierarchy level.

Release History Table

Release	Description
17.2R1	Starting in Junos OS Release 17.2 R1, unified in-service software upgrade is supported for VXLAN using PIM on MX Series routers.
16.2R1	Starting in Junos OS Release 16.2R1, Protocol Independent Multicast (PIM) nonstop active routing (NSR) support for Virtual Extensible LAN (VXLAN) is supported on MX Series routers.

Related Documentation

- show pim join on page 179
- show multicast route on page 167
- *Understanding Graceful Routing Engine Switchover*

Copyright © 2018, Juniper Networks, Inc.

PART 2

Configuring OVSDB and VXLAN

- Configuring OVSDB-Managed VXLANs with an SDN Controller on page 31
- Configuring VXLANs Without an SDN Controller on page 71

Copyright © 2018, Juniper Networks, Inc.

CHAPTER 2

Configuring OVSDB-Managed VXLANs with an SDN Controller

- OVSDB and VXLAN Configuration Workflows for VMware NSX Environment on page 31
- Installing OVSDB on Juniper Networks Devices on page 35
- Understanding How to Set Up OVSDB Connections on a Juniper Networks Device on page 36
- Creating and Installing an SSL Key and Certificate on a Juniper Networks Device for Connection with SDN Controllers on page 37
- Setting Up OVSDB on Juniper Networks Devices That Support the Dynamic Configuration of VXLANs on page 38
- Understanding Dynamically Configured VXLANs in an OVSDB Environment on page 39
- VMware NSX Configuration for Juniper Networks Devices Functioning as Virtual Tunnel Endpoints on page 47
- Example: Setting Up a VXLAN Layer 2 Gateway and OVSDB Connections in a VMware NSX Environment (Trunk Interfaces Supporting Untagged Packets) on page 50
- Example: Setting Up a VXLAN Layer 2 Gateway and OVSDB Connections in a VMware NSX Environment (Trunk Interfaces Supporting Tagged Packets) on page 58
- Verifying That a Logical Switch and Corresponding Junos OS OVSDB-Managed VXLAN Are Working Properly on page 68

OVSDB and VXLAN Configuration Workflows for VMware NSX Environment

The workflow that you use to configure Open vSwitch Database (OVSDB) and Virtual Extensible LAN (VXLAN) in a VMware NSX environment depends on the Juniper Networks device that you are configuring. This topic provides more information about the following workflows:

- OVSDB and VXLAN Configuration Workflow for QFX Series Switches on page 32
- OVSDB and VXLAN Configuration Workflow for MX Series Routers and EX9200 Switches on page 33

OVSDB and VXLAN Configuration Workflow for QFX Series Switches

Table 5 on page 32 provides a high-level workflow of the tasks that you must perform to configure OVSDB and VXLAN on QFX Series switches. You must perform the tasks in Table 5 on page 32 for each Juniper Networks switch that you plan to deploy in an OVSDB environment. In general, the successful completion of a task in this workflow depends on the successful completion of the previous task, so it is important to adhere to the task sequence provided in Table 5 on page 32.

Table 5: OVSDB and VXLAN Configuration Workflow for QFX Series Switches

Sequence	Task	For More Information
1	Create and install a Secure Sockets Layer (SSL) key and certificate.	"Creating and Installing an SSL Key and Certificate on a Juniper Networks Device for Connection with SDN Controllers" on page 37.
2	Enter the **set switch-options ovsdb-managed** configuration mode command on the Juniper Networks switch.	–
3	Explicitly configure a connection to at least one VMware NSX controller.	"Setting Up OVSDB on Juniper Networks Devices That Support the Dynamic Configuration of VXLANs" on page 38.
4	Specify that each physical interface associated with a VXLAN is to be managed by OVSDB.	"Setting Up OVSDB on Juniper Networks Devices That Support the Dynamic Configuration of VXLANs" on page 38.
5	Configure a logical switch for each OVSDB-managed VXLAN that you plan to implement.	See the VMware documentation that accompanies NSX Manager or the NSX API.
6	• For each Juniper Network switch on which OVSDB-managed VXLANs and interfaces are configured, create a gateway. • For each OVSDB-managed interface that you configure, create a gateway service. • For each logical interface that you plan to implement for a VXLAN, configure a logical switch port. NOTE: On QFX Series switches, when multiple logical interfaces are bound to an OVSDB-managed physical interface, keep in mind that all of the logical interfaces must be either access interfaces that handle untagged packets or trunk interfaces that handle tagged packets. An OVSDB-managed physical interface does not support a mix of access and trunk interfaces.	For general information about configuring gateways, gateway services, and logical switch ports, see the VMware documentation that accompanies NSX Manager or the NSX API. For key NSX Manager configuration details that help you configure gateways, gateway services, and logical switch ports so they function properly with their physical counterparts, see "VMware NSX Configuration for Juniper Networks Devices Functioning as Virtual Tunnel Endpoints" on page 47.

Copyright © 2018, Juniper Networks, Inc.

Table 5: OVSDB and VXLAN Configuration Workflow for QFX Series Switches (continued)

Sequence	Task	For More Information
7	Configure the loopback interface (lo0) on the Juniper Networks switch for VXLAN by entering the following configuration mode commands: • **set interfaces lo0 unit 0 family inet address *ip-address* primary** • **set switch-options vtep-source-Interface lo0.0**	–

After you successfully complete task 6 in Table 5 on page 32, the Juniper Networks switch dynamically creates a VXLAN for each logical switch that you configured in task 5. The Juniper Networks switch also dynamically creates and associates interfaces with each VXLAN. The dynamically created interface configuration is based on the gateway service and logical switch ports that you configured in task 6. For more information, see "Understanding Dynamically Configured VXLANs in an OVSDB Environment" on page 39.

For OVSDB-VXLAN scenarios in which Juniper Networks switches are commonly deployed, see the following topics:

- Example: Setting Up a VXLAN Layer 2 Gateway and OVSDB Connections in a VMware NSX Environment (Trunk Interfaces Supporting Untagged Packets) on page 50
- Example: Setting Up a VXLAN Layer 2 Gateway and OVSDB Connections in a VMware NSX Environment (Trunk Interfaces Supporting Tagged Packets) on page 58

OVSDB and VXLAN Configuration Workflow for MX Series Routers and EX9200 Switches

Table 6 on page 33 provides a high-level workflow of the tasks that you must perform to configure OVSDB and VXLAN on MX Series routers and EX9200 switches. You must perform the tasks inTable 6 on page 33 for each Juniper Networks device that you plan to deploy in an OVSDB environment. In general, the successful completion of a task in this workflow depends on the successful completion of the previous task, so it is important to adhere to the task sequence provided in Table 6 on page 33.

Table 6: OVSDB and VXLAN Configuration Workflow for MX Series Routers and EX9200 Switches

Sequence	Task	For More Information
1	Create and install an SSL key and certificate.	"Creating and Installing an SSL Key and Certificate on a Juniper Networks Device for Connection with SDN Controllers" on page 37.
2	Explicitly configure a connection to at least one NSX controller.	*Setting Up the OVSDB Protocol on Juniper Networks Devices that Support Manual Configuration of VXLANs*.
3	Specify that each physical interface associated with a VXLAN is to be managed by OVSDB.	*Setting Up the OVSDB Protocol on Juniper Networks Devices that Support Manual Configuration of VXLANs*.

Table 6: OVSDB and VXLAN Configuration Workflow for MX Series Routers and EX9200 Switches (continued)

Sequence	Task	For More Information
4	Configure a logical switch for each OVSDB-managed VXLAN that you plan to implement.	See the VMware documentation that accompanies NSX Manager or the NSX API.
5	Configure OVSDB-managed VXLANs.	*Configuring OVSDB-Managed VXLANs*.
6	For each Juniper Network device on which OVSDB-managed VXLANs and interfaces will be configured, create a gateway. For each OVSDB-managed interface that you configure, create a gateway service. For each logical interface that you plan to implement for a VXLAN, configure a logical switch port.	For general information about configuring gateways, gateway services, and logical switch ports, see the VMware documentation that accompanies NSX Manager or the NSX API. For key NSX Manager configuration details that help you configure gateways, gateway services, and logical switch ports, so that they function properly with their physical counterparts, see "VMware NSX Configuration for Juniper Networks Devices Functioning as Virtual Tunnel Endpoints" on page 47.
7	Configure the loopback interface (lo0) on the Juniper Networks device for VXLAN by entering the following configuration mode commands: • **set interfaces lo0 unit 0 family inet address *ip-address* primary** • **set switch-options vtep-source-Interface lo0.0**	–

For OVSDB-VXLAN scenarios in which these Juniper Networks devices are commonly deployed, see the following topics:

- *Example: Setting Up Inter-VXLAN Unicast Routing and OVSDB Connections in a Data Center*
- *Example: Setting Up Inter-VXLAN Unicast and Multicast Routing and OVSDB Connections in a Data Center*
- *Example: Configuring VXLAN to VPLS Stitching with OVSDB*

Related Documentation

- Verifying That a Logical Switch and Corresponding Junos OS OVSDB-Managed VXLAN Are Working Properly on page 68

Copyright © 2018, Juniper Networks, Inc.

Installing OVSDB on Juniper Networks Devices

NOTE: The Open vSwitch Database (OVSDB) software is included in the **jsdn** package. For some Juniper Networks devices, the **jsdn** package is included in the Junos OS software (**jinstall**) package. On these Juniper Networks devices, you do not need to install the separate **jsdn** package, which means that you can skip the task described in this topic. For information about which devices do not require installation of the separate **jsdn** package, see "OVSDB Support on Juniper Networks Devices" on page 16.

If the **jsdn** package for your Juniper Networks device is not included in the **jinstall** package, you must copy a separate **jsdn** package to the Juniper Networks device and then install the package. The package name uses the following format:

jsdn-*packageID-release*

where:

- *packageID* identifies the package that must run on each Juniper Networks device.
- *release* identifies the release; for example, 16.2. The **jsdn** package release and the **jinstall** release running on the device must be the same.

To install the **jsdn** package on a Juniper Networks device:

1. Download the software package to the Juniper Networks device.

2. If an older **jsdn** package already exists on the Juniper Networks device, remove the package by issuing the **request system software delete** operational mode command.

```
user@device> request system software delete existing-ovsdb-package
```

3. Install the new **jsdn** package by using the **request system software add** operational mode command.

```
user@device> request system software add path-to-ovsdb-package
```

Related Documentation

- Understanding the OVSDB Protocol Running on Juniper Networks Devices on page 15
- OVSDB and VXLAN Configuration Workflows for VMware NSX Environment on page 31

Understanding How to Set Up OVSDB Connections on a Juniper Networks Device

The Juniper Networks Junos OS implementation of the Open vSwitch Database (OVSDB) management protocol provides a means through which Juniper Networks devices that support OVSDB can communicate with software-defined networking (SDN) controllers. A Juniper Networks device exchanges control and statistical data with each SDN controller to which it is connected.

You can connect a Juniper Networks device to more than one SDN controller for redundancy.

In a VMware NSX environment, one cluster of NSX controllers typically includes three or five controllers. To implement the OVSDB management protocol on a Juniper Networks device, you must explicitly configure a connection to one SDN controller, using the Junos OS CLI. If the SDN controller to which you explicitly configure a connection is in a cluster, the controller pushes information about other controllers in the same cluster to the device, and the device establishes connections with the other controllers. However, you can also explicitly configure connections with the other controllers in the cluster, using the Junos OS CLI.

To implement the OVSDB management protocol on a Juniper Networks device in a Contrail environment, you must configure a connection to a Contrail controller, using the Junos OS CLI.

Connections to all SDN controllers are made on the management interface of the Juniper Networks device. To set up a connection between a Juniper Networks device and an SDN controller, you need to configure the following parameters on the Juniper Networks device:

- IP address of the SDN controller.
- The protocol that secures the connection. Secure Sockets Layer (SSL) is the supported protocol.

  NOTE: **The SSL connection requires a private key and certificates, which must be stored in the /var/db/certs directory of the Juniper Networks device.** See "Creating and Installing an SSL Key and Certificate on a Juniper Networks Device for Connection with SDN Controllers" on page 37.

- Number of the port over which the connection is made. The port number of the default port is 6632.

Optionally, you can configure the following connection timers on the Juniper Networks device:

- Inactivity probe duration—The maximum amount of time, in milliseconds, that the connection can be inactive before an inactivity probe is sent. The default value is 0 milliseconds, which means that an inactivity probe is never sent.

Copyright © 2018, Juniper Networks, Inc.

- Maximum backoff duration—If an attempt to connect to an SDN controller fails, the maximum amount of time, in milliseconds, before the device can make the next attempt. The default value is 1000 milliseconds.

Related Documentation

- *Setting Up the OVSDB Protocol on Juniper Networks Devices that Support Manual Configuration of VXLANs*
- Setting Up OVSDB on Juniper Networks Devices That Support the Dynamic Configuration of VXLANs on page 38

Creating and Installing an SSL Key and Certificate on a Juniper Networks Device for Connection with SDN Controllers

To secure a connection between a Juniper Networks device that supports the Open vSwitch Database (OVSDB) management protocol and one or more software-defined networking (SDN) controllers, the following Secure Sockets Layer (SSL) files must be present in the **/var/db/certs** directory on the device:

- **vtep-privkey.pem**
- **vtep-cert.pem**
- **ca-cert.pem**

You must create the **vtep-privkey.pem** and **vtep-cert.pem** files for the device and then install the two files in the **/var/db/certs** directory on the device.

Upon initial connection between a Juniper Networks device with OVSDB implemented and an SDN controller, the **ca-cert.pem** file is automatically generated and then installed in the **/var/db/certs** directory on the device.

NOTE: **The situation at your particular site determines the possible methods that you can use to create the vtep-privkey.pem and vtep-cert.pem files and install them in the Juniper Networks device. Instead of providing procedures for all possible situations, this topic provides a procedure for one common scenario.**

The procedure provided in this topic uses the OpenFlow public key infrastructure (PKI) management utility ovs-pki on a Linux computer to initialize a PKI and create the **vtep-privkey.pem** and **vtep-cert.pem** files. (If you have an existing PKI on your Linux computer, you can skip the step to initialize a new one.) By default, the utility initializes the PKI and places these files in the **/usr/local/share/openvswitch/pki** directory of the Linux computer.

To create and install an SSL key and certificate on a Juniper Networks device:

1. Initialize a PKI if one does not already exist on your Linux computer.

```
# ovs-pki init
```

2. On the same Linux computer on which the PKI exists, create a new key and certificate for the Juniper Networks device.

```
# ovs-pki req+sign vtep
```

3. Copy only the **vtep-privkey.pem** and **vtep-cert.pem** files from the Linux computer to the **/var/db/certs** directory on the Juniper Networks device.

Related Documentation

- Understanding How to Set Up OVSDB Connections on a Juniper Networks Device on page 36

Setting Up OVSDB on Juniper Networks Devices That Support the Dynamic Configuration of VXLANs

To implement the Open vSwitch Database (OVSDB) management protocol on a Juniper Networks device, you must configure a connection between the Juniper Networks device and a software-defined networking (SDN) controller using the Junos OS CLI.

All SDN controller connections are made on the management interface of the Juniper Networks device. This connection is secured by using the Secure Sockets Layer (SSL) protocol. The default port number for the connection is 6632.

You must also specify that each physical interface that is connected to a physical server is managed by OVSDB. By performing this configuration, you essentially disable the Juniper Networks device from learning about other Juniper Networks devices that function as hardware virtual tunnel endpoints (VTEPs) and the MAC addresses learned by the hardware VTEPs. Instead, this configuration enables OVSDB to learn about these elements.

Before setting up OVSDB on a Juniper Networks device, you must do the following:

- Create an SSL private key and certificate, if they do not already exist, and install them in the **/var/db/certs** directory of the Juniper Networks device. See "Creating and Installing an SSL Key and Certificate on a Juniper Networks Device for Connection with SDN Controllers" on page 37.

To set up OVSDB on a Juniper Networks device:

1. Specify the IP address of the SDN controller.

```
[edit protocols ovsdb]
user@host# set controller ip-address
```

2. Specify SSL as the protocol that secures the connection between the Juniper Networks device and the SDN controller.

```
[edit protocols ovsdb]
user@host# set controller ip-address protocol ssl
```

3. Set the number of the port over which the connection to the SDN controller is made.

Copyright © 2018, Juniper Networks, Inc.

```
[edit protocols ovsdb]
user@host# set controller ip-address protocol ssl port number
```

4. (Optional) Specify (in milliseconds) how long the connection can be inactive before an inactivity probe is sent.

```
[edit protocols ovsdb]
user@host# set controller ip-address inactivity-probe-duration milliseconds
```

5. (Optional) Specify (in milliseconds) how long the device must wait before it can try to connect to the SDN controller again if the previous attempt failed.

```
[edit protocols ovsdb]
user@host# set controller ip-address maximum-backoff-duration milliseconds
```

6. (Optional) Repeat Steps 1 through 5 to configure a connection to an additional SDN controller in the NSX environment.

7. Specify that each physical interface that is connected to a physical server is managed by OVSDB.

```
[edit protocols ovsdb]
user@host# set interfaces interface-name
```

When specifying the *interface-name*, you do not need to include a logical unit number.

8. Complete the remaining configuration tasks, which are described in "OVSDB and VXLAN Configuration Workflows for VMware NSX Environment" on page 31).

Understanding Dynamically Configured VXLANs in an OVSDB Environment

NOTE: This topic applies only to QFX Series switches, which support the dynamic configuration of Open vSwitch Database (OVSDB)-managed Virtual Extensible LANs (VXLANs). Although the configuration of OVSDB-managed VXLANs is automated on these switches, there are tasks that you must perform before and after the dynamic configuration.

On all other Juniper Networks devices that support OVSDB and VXLAN, you must manually configure OVSDB-managed VXLANs using the Junos OS CLI. For more information about manually configuring OVSDB-managed VXLANs, see *Configuring OVSDB-Managed VXLANs*.

The Juniper Networks Junos OS implementation of the OVSDB management protocol provides a means through which Juniper Networks devices that support OVSDB can communicate with software-defined networking (SDN) controllers. Support for OVSDB enables the devices in a physical network to be integrated into a virtualized network.

In a Junos OS environment, the concept of an OVSDB-managed Layer 2 broadcast domain in which data flows are limited to that domain is known as a *VXLAN*. The term used for the same concept in other OVSDB environments depends on the environment:

- In an NSX environment, the same concept is known as a *logical switch*.
- In a Contrail environment, the same concept is known as a *virtual network*.

Understanding the terminology used in the different environments will help you to better understand the workflow associated with the dynamic configuration of OVSDB-managed VXLANs, including tasks that you must perform before and after the dynamic configuration.

The following sections describe the dynamic configuration of OVSDB-managed VXLANs:

- Performing Tasks Before and After the Dynamic Configuration of OVSDB-Managed VXLANs on page 40
- What the Juniper Networks Switch Actually Creates Dynamically on page 44

Performing Tasks Before and After the Dynamic Configuration of OVSDB-Managed VXLANs

Although the configuration of OVSDB-managed VXLANs is automated, there are some tasks that you must perform before and after the dynamic configuration. Table 7 on page 40 includes a sequentially ordered workflow of tasks and events for the dynamic configuration of OVSDB-managed VXLANs in an NSX environment, while Table 8 on page 42 includes the equivalent information for a Contrail environment. Your familiarity with these workflows will ensure that the dynamic configuration of OVSDB-managed VXLANs is properly implemented.

In Table 7 on page 40, the NSX controller and Juniper Networks switch handle the events described in workflow numbers 4, 6, and 7. You must perform the tasks described in workflow numbers 1, 2, 3, 5, and 8. If you perform a task in a different order than that outlined in Table 7 on page 40, the dynamic configuration might not work or the dynamically configured OVSDB-managed VXLAN might not become functional.

Table 7: Workflow of Tasks and Events for the Dynamic Configuration of OVSDB-Managed VXLANs in an NSX Environment

Workflow Number	Task or Event	How Task or Event Is Handled	More Information About Task or Event
1	Enable the Juniper Networks switch to dynamically configure an OVSDB-managed VXLAN.	You must manually enable this capability by entering the **set switch-options ovsdb-managed** configuration mode command on the switch.	–
2	On the Juniper Networks switch, configure each physical interface that is connected to a physical server so that the interface is managed by OVSDB.	For each physical interface, you must manually enter the **set protocols ovsdb interfaces *interface-name*** configuration mode command.	When entering the interface name, you do not need to include a logical unit number.

 Copyright © 2018, Juniper Networks, Inc.

Table 7: Workflow of Tasks and Events for the Dynamic Configuration of OVSDB-Managed VXLANs in an NSX Environment (continued)

Workflow Number	Task or Event	How Task or Event Is Handled	More Information About Task or Event
3	For each OVSDB-managed VXLAN that you want to implement, configure a logical switch.	You must manually configure the logical switch by using NSX Manager or the NSX API. See the documentation that accompanies NSX Manager or the NSX API.	A universally unique identifier (UUID) for the logical switch is dynamically generated.
4	Relevant information about the logical switch is pushed to the Juniper Networks switch.	The NSX controller pushes relevant information to the logical switch table in the OVSDB schema for physical devices. This schema resides in the Juniper Networks switch.	–
5	Create the following entities: • For each Juniper Networks switch that you deploy as a hardware VTEP, you create a gateway. • For each OVSDB-managed interface that you configured in workflow number 2, you create a gateway service. • For each interface that you plan to implement for a VXLAN, configure a logical switch port.	You must manually configure these entities by using NSX Manager or the NSX API. See the documentation that accompanies NSX Manager or the NSX API. Also see "VMware NSX Configuration for Juniper Networks Devices Functioning as Virtual Tunnel Endpoints" on page 47.	–
6	Relevant information about the gateway service and logical switch port are pushed to the Juniper Networks switch.	The NSX controller pushes this information to the Juniper Networks switch.	–
7	A corresponding VXLAN is dynamically created. Based on the gateway service and logical switch port configured in NSX Manager or the NSX API, one or more interfaces are also created and associated with the VXLAN.	The Juniper Networks switch dynamically creates the VXLAN and interface configuration.	For the name of the VXLAN, the Juniper Networks switch uses the UUID of the logical switch.

Copyright © 2018, Juniper Networks, Inc.

Table 7: Workflow of Tasks and Events for the Dynamic Configuration of OVSDB-Managed VXLANs in an NSX Environment (continued)

Workflow Number	Task or Event	How Task or Event Is Handled	More Information About Task or Event
8	(Recommended) Verify that the logical switch, corresponding VXLAN, and associated interfaces are configured properly and are operational.	You can enter the **show ovsdb logical-switch** operational mode command on the Juniper Networks switch. In the output, check the Flags field for the logical switches that you configured as described in workflow number 3 to ensure that it displays Created by both.	If the output of the **show ovsdb logical-switch** operational mode command does not include the Created by both state, see "Troubleshooting a Nonoperational Logical Switch and Corresponding Junos OS OVSDB-Managed VXLAN" on page 87.

In Table 8 on page 42, the Contrail controller and Juniper Networks switch handle the events described in workflow numbers 5, 8, and 9. You must perform all other tasks described in the table. If you perform a task in a different order than that outlined in Table 8 on page 42, the dynamic configuration might not work or the dynamically configured OVSDB-managed VXLAN might not become functional.

NOTE: Although you can perform the Contrail configurations outlined in Table 8 on page 42 in the Contrail Web user interface or in the Contrail REST API, Table 8 on page 42 only describes how to perform tasks in the Contrail Web user interface.

Table 8: Workflow of Tasks and Events for the Dynamic Configuration of OVSDB-Managed VXLANs in a Contrail Environment

Workflow Number	Task or Event	How Task or Event Is Handled	More Information About Task or Event
1	On the Juniper Networks switch, configure a unique hostname for the switch.	You must manually enter the **set system host-name** ***host-name*** configuration mode command on the switch.	If implementing a virtual chassis, be aware that all members of the virtual chassis must have the same hostname.
2	Enable the Juniper Networks switch to dynamically configure an OVSDB-managed VXLAN.	You must manually enable this capability by entering the **set switch-options ovsdb-managed** configuration mode command on the switch.	–
3	On the Juniper Networks switch, configure each physical interface that is connected to a physical server so that the interface is managed by OVSDB.	For each physical interface, you must manually enter the **set protocols ovsdb interfaces** ***interface-name*** configuration mode command.	When entering the interface name, you do not need to include a logical unit number.

Copyright © 2018, Juniper Networks, Inc.

Table 8: Workflow of Tasks and Events for the Dynamic Configuration of OVSDB-Managed VXLANs in a Contrail Environment (continued)

Workflow Number	Task or Event	How Task or Event Is Handled	More Information About Task or Event
4	For each OVSDB-managed VXLAN that you want to implement, configure a virtual network in the Contrail Web user interface.	You must manually configure the virtual network by navigating to Configure > Networking > Networks. See Creating a Virtual Network.	See *Contrail Configuration for Juniper Networks Devices That Function as Hardware VTEPs*.
5	Relevant information about the virtual network is pushed to the Juniper Networks switch.	The Contrail controller pushes relevant information to the logical switch table in the OVSDB schema for physical devices. This schema resides in the Juniper Networks switch.	–
6	For each interface that you plan to implement for a VXLAN, configure a logical interface.	In the Contrail Web user interface, you must manually configure the logical interface by navigating to Configure > Physical Devices > Interfaces. For information about configuring a logical interface, see Using TOR Switches and OVSDB to Extend the Contrail Cluster to Other Instances.	See *Contrail Configuration for Juniper Networks Devices That Function as Hardware VTEPs*.
7	For each Juniper Networks switch that you deploy as a hardware VTEP, you create a physical router.	In the Contrail Web user interface, you must manually configure the physical router by navigating to Configure > Physical Devices > Physical Routers. For information about configuring a physical router, see Using TOR Switches and OVSDB to Extend the Contrail Cluster to Other Instances.	See *Contrail Configuration for Juniper Networks Devices That Function as Hardware VTEPs*.
8	Relevant information about the logical interfaces is pushed to the Juniper Networks switch.	The Contrail controller pushes this information to the Juniper Networks switch.	–

Table 8: Workflow of Tasks and Events for the Dynamic Configuration of OVSDB-Managed VXLANs in a Contrail Environment (continued)

Workflow Number	Task or Event	How Task or Event Is Handled	More Information About Task or Event
9	A corresponding VXLAN is dynamically created. Based on the logical interface configured in the Contrail Web user interface, one or more interfaces are also created and associated with the VXLAN.	The Juniper Networks switch dynamically creates the VXLAN and interface configurations.	For the name of the VXLAN, the Juniper Networks switch uses the prefix "Contrail-" and the UUID of the virtual network.
10	(Recommended) Verify that the virtual network, corresponding VXLAN, and interfaces are configured properly and are operational.	You can enter the **show ovsdb logical-switch** operational mode command on the Juniper Networks switch. In the output, check the Flags field for the virtual network that you configured as described in workflow number 4 to ensure that it displays Created by both.	If the output of the **show ovsdb logical-switch** operational mode command does not include the Created by both state, see "Troubleshooting a Nonoperational Logical Switch and Corresponding Junos OS OVSDB-Managed VXLAN" on page 87.

What the Juniper Networks Switch Actually Creates Dynamically

When a Juniper Networks switch creates a VXLAN, it sets up a configuration similar to the following sample:

```
set vlans 28805c1d-0122-495d-85df-19abd647d772 vxlan vni 100
```

Note the following meanings for this sample configuration:

- The name of the VXLAN is 28805c1d-0122-495d-85df-19abd647d772. The UUID of the logical switch, which was configured in NSX Manager or in the NSX API, is 28805c1d-0122-495d-85df-19abd647d772. For a VXLAN created in a Contrail environment, the name would be preceded by "Contrail-".
- For the virtual network identifier (VNI), the Juniper Networks switch uses either the VNI specified in the logical switch configuration (NSX) or the VXLAN identifier specified in the virtual network configuration (Contrail). In this example, VNI 100 is used. If the Juniper Networks switch detects that VNI 100 is a duplicate of a VNI from a VXLAN configured by manually using the **set vlans *vlan-name* vxlan vni (1 – 16777214)** command in the Junos OS CLI, the switch deletes the manually configured VXLAN. Or, if the Juniper Networks switch detects that VNI 100 is specified in the dynamically configured VXLAN, but for some reason, the VNI is no longer in the equivalent logical switch or virtual network configuration, the Juniper Networks switch deletes VNI 100 from the VXLAN.

If you need to modify or delete an OVSDB-managed VXLAN that was dynamically configured by the Juniper Networks switch, you must modify or delete either the corresponding logical switch configuration (NSX), or the corresponding virtual network configuration (Contrail). After you modify or delete the configuration, the SDN controller

 Copyright © 2018, Juniper Networks, Inc.

pushes the update to the Juniper Networks switch, and the switch modifies or deletes its configuration accordingly.

Depending on either the gateway service and logical switch ports configuration (NSX), or the logical interface configuration (Contrail), the Juniper Networks switch dynamically creates and associates one or more interfaces with the VXLAN. The configuration generated by the switch depends on whether an interface must support untagged or tagged packets. The following sections provide information about the configuration that the switch dynamically generates for each interface:

- Dynamic Association of a Trunk Interface Supporting Untagged Packets to a Dynamically Created VXLAN on page 45
- Dynamic Association of a Trunk Interface Supporting Tagged Packets to a Dynamically Created VXLAN on page 46

Dynamic Association of a Trunk Interface Supporting Untagged Packets to a Dynamically Created VXLAN

To determine the type of interface to create and associate with an OVSDB-managed VXLAN, the Juniper Networks switch uses the VLAN ID that you specified when configuring either the logical switch port (NSX), or the logical interface (Contrail). If you specified **0** as the VLAN ID, the switch dynamically configures a trunk interface that can handle untagged packets. (If you specified a valid non-zero VLAN ID, the switch creates a trunk interface that handles tagged packets.)

After the SDN controller pushes either the NSX or Contrail configurations to the Juniper Networks switch, the switch dynamically creates a configuration similar to the following:

```
set interfaces ge-1/0/0 flexible-vlan-tagging
set interfaces ge-1/0/0 native-vlan-id 4094
set interfaces ge-1/0/0 encapsulation extended-vlan-bridge
set interfaces ge-1/0/0 unit 0 vlan-id 4094
set vlans 28805c1d-0122-495d-85df-19abd647d772 interface ge-1/0/0.0
```

This sample configuration sets up physical interface ge-1/0/0 as a trunk interface. It also configures a native VLAN with an ID of 4094 and specifies that logical interface ge-1/0/0.0 is a member of the native VLAN. As a result, logical interface ge-1/0/0.0 handles incoming untagged packets.

NOTE: We reserve VLAN ID 4094 for native VLANs in an OVSDB environment. As a result, when you create either a logical switch port (NSX) or a logical interface (Contrail), if you specify VLAN ID 4094, the Juniper Networks switch does not dynamically configure a corresponding interface. Also, a system log error message is generated.

Instead of dynamically configuring physical interface ge-1/0/0 as an access interface, which typically handles untagged packets, the Juniper Networks switch configures it as a trunk interface. The intent of this configuration is to support the division of physical interface ge-1/0/0 into multiple logical interfaces, some of which are associated with

VXLANs that handle untagged packets and some of which are associated with VXLANs that handle tagged packets.

The sample configuration also creates logical interface ge-1/0/0.0 and associates this interface with VXLAN 28805c1d-0122-495d-85df-19abd647d772.

Dynamic Association of a Trunk Interface Supporting Tagged Packets to a Dynamically Created VXLAN

Starting with Junos OS Release 14.1X53-D15 for QFX5100 switches, 15.1X53-D10 for QFX10002 switches, 15.1X53-D30 for QFX10008 switches, 15.1X53-D60 for QFX10016 switches, 15.1X53-D210 for QFX5110 and QFX5200 switches, and 18.1R1 for QFX5210 switches, the dynamic configuration of trunk interfaces and their association with an OVSDB-managed VXLAN is supported.

In a network that is divided into multiple VXLANs, each VXLAN has a VLAN ID associated with it. Packets associated with a particular VXLAN include the corresponding tag. In this situation, the interface that connects the Juniper Networks switch to a physical server in an OVSDB environment is a trunk interface that handles only tagged packets.

To determine the type of interface to create and associate with an OVSDB-managed VXLAN, the Juniper Networks switch uses the VLAN ID that you specified when configuring either the logical switch port (NSX), or the logical interface (Contrail). If you specified a valid VLAN ID other than 0 in either configuration, the switch creates a trunk interface that can handle tagged packets. (If you specified **0** as the VLAN ID, the switch creates a trunk interface that handles untagged packets.)

After the SDN controller pushes the NSX or Contrail configuration to the Juniper Networks switch, the switch dynamically creates a configuration similar to the following:

```
set interfaces ge-1/0/0 flexible-vlan-tagging
set interfaces ge-1/0/0 encapsulation extended-vlan-bridge
set interfaces ge-1/0/0 unit 10 vlan-id 10
set vlans 28805c1d-0122-495d-85df-19abd647d772 interfaces ge-1/0/0.10
```

The sample configuration sets up physical interface ge-1/0/0 as a trunk interface. It also configures a VLAN with an ID of 10 and specifies that interface ge-1/0/0.10 is a member of the VLAN. With the configuration of VLAN 10, logical interface ge-1/0/0.10 accepts incoming packets with a VLAN tag of 10 and adds a tag of 100 to each packet. Adding a tag of 100 identifies the packets as received by the VXLAN 28805c1d-0122-495d-85df-19abd647d772, which has a VNI of 100. This configuration also associates the trunk interface with VXLAN 28805c1d-0122-495d-85df-19abd647d772.

 Copyright © 2018, Juniper Networks, Inc.

Release History Table

Release	Description
14.1X53-D15	Starting with Junos OS Release 14.1X53-D15 for QFX5100 switches, 15.1X53-D10 for QFX10002 switches, 15.1X53-D30 for QFX10008 switches, 15.1X53-D60 for QFX10016 switches, 15.1X53-D210 for QFX5110 and QFX5200 switches, and 18.1R1 for QFX5210 switches, the dynamic configuration of trunk interfaces and their association with an OVSDB-managed VXLAN is supported.

Related Documentation

- Understanding the OVSDB Protocol Running on Juniper Networks Devices on page 15
- **show ovsdb logical-switch on page 135**

VMware NSX Configuration for Juniper Networks Devices Functioning as Virtual Tunnel Endpoints

When implementing the Open vSwitch Database (OVSDB) management protocol and Virtual Extensible LANs (VXLANs) on a Juniper Networks device, you must perform the following tasks in VMware NSX Manager or in the NSX API:

- For each Juniper Networks device on which OVSDB-managed VXLANs and physical interfaces are configured, you must create an NSX-equivalent entity, which is known as a *gateway*.
- For each OVSDB-managed physical interface that you configure on a Juniper Networks device, you must configure a gateway service—for example, a VTEP Layer 2 gateway service.
- For each logical interface that you want to implement for a VXLAN, you must configure a logical switch port.

The configurations described in this topic enable connectivity between physical servers in the physical network and virtual machines (VMs) in the virtual network.

This topic provides a high-level summary of the tasks that you must perform to create a gateway, gateway service, and logical switch ports. Although you can create these virtual entities either in NSX Manager or in the NSX API, this topic only describes how to perform the tasks in NSX Manager. Also, this topic does not include a complete procedure for each task. Rather, it includes key NSX Manager configuration details for ensuring the correct configuration of the virtual entities so that they function properly with the physical entities.

For complete information about performing the tasks described in this topic, see the documentation that accompanies NSX Manager.

This topic describes the following tasks:

- Creating a Gateway on page 48
- Creating a Gateway Service on page 48
- Creating a Logical Switch Port on page 49

Creating a Gateway

In NSX Manager, you must create a gateway for each Juniper Networks device on which OVSDB-managed VXLANs and physical interfaces are configured. Table 9 on page 48 provides a summary of key configuration fields in NSX Manager and how to configure them when creating a gateway.

Table 9: Key Configurations to Create a Gateway in NSX Manager

NSX Manager Configuration Page or Dialog Box	NSX Manager Configuration Field	How to Configure
Type	Transport Node Type	Select **Gateway**.
Properties	VTEP Enabled	Select **VTEP Enabled**.
Credential	Type	Select **Management Address**.
Credential	Management Address	Specify the management IP address of the Juniper Networks device.
Connections/Create Transport Connector	Transport Type	Select **VXLAN**.
Connections/Create Transport Connector	Transport Zone UUID	Select the UUID of an existing transport zone, or create a new transport zone.
Connections/Create Transport Connector	IP Address	Specify the IP address of the loopback interface (lo0) of the Juniper Networks device.

Creating a Gateway Service

In NSX Manager, you must create a gateway service for each OVSDB-managed physical interface that you configure on a Juniper Networks device. Creating a gateway service essentially does the following for each OVSDB-managed physical interface:

- Specifies a gateway service—for example, a VTEP Layer 2 gateway service.
- Binds the interface to a gateway that you created in "Creating a Gateway" on page 48.

Before you start this task, you must complete the following configurations:

- A gateway for the Juniper Networks device on which the OVSDB-managed physical interfaces are configured. See "Creating a Gateway" on page 48.
- The OVSDB-managed physical interfaces on the Juniper Networks device. For information about configuring OVSDB-managed interfaces on Juniper Networks devices that support the dynamic configuration of VXLANs, see "Setting Up OVSDB on Juniper Networks Devices That Support the Dynamic Configuration of VXLANs" on page 38. For information about configuring OVSDB-managed interfaces on Juniper Networks devices that support the manual configuration of VXLANs, see *Setting Up the OVSDB Protocol on Juniper Networks Devices that Support Manual Configuration of VXLANs*.

Copyright © 2018, Juniper Networks, Inc.

Table 10 on page 49 provides a summary of key configuration fields in NSX Manager and how to configure them when creating a gateway service.

Table 10: Key Configurations to Create a Gateway Service in NSX Manager

NSX Manager Configuration Page or Dialog Box	NSX Manager Configuration Field	How to Configure
Type	Gateway Service Type	Select **VTEP L2 Gateway Service**.
Transport Nodes/Edit Gateway	Transport Node	Select the gateway that you created for the Juniper Networks device.
Transport Nodes/Edit Gateway	Port ID	Select an OVSDB-managed physical interface configured on the Juniper Networks device.

Creating a Logical Switch Port

In NSX Manager, you must create a logical switch port for each logical interface that you plan to implement for a VXLAN. Creating the logical switch port essentially does the following for each logical interface:

- Binds the logical switch port to a logical switch that you created in NSX Manager or in the NSX API.
- Binds the logical interface to a gateway service that you configured in "Creating a Gateway Service" on page 48.

Before you start this task, you must complete the following configurations:

- A logical switch with which this logical port is associated. For information about configuring a logical switch, see the VMware documentation that accompanies NSX Manager or the NSX API.
- A gateway service that specifies the OVSDB-managed physical interface with which the logical interface is associated. See "Creating a Gateway Service" on page 48.

Table 11 on page 49 provides a summary of key configuration fields in NSX Manager and how to configure them when creating a logical switch port.

Table 11: Key Configurations to Create a Logical Switch Port in NSX Manager

NSX Manager Configuration Page or Dialog Box	NSX Manager Configuration Field	How to Configure
Logical Switch	Logical Switch UUID	Select the UUID of a logical switch.
Attachment	Attachment Type	Select **VTEP L2 Gateway**.
Attachment	VTEP L2 Gateway Service UUID	Select the UUID of a gateway service.

Copyright © 2018, Juniper Networks, Inc.

Table 11: Key Configurations to Create a Logical Switch Port in NSX Manager (continued)

NSX Manager Configuration Page or Dialog Box	NSX Manager Configuration Field	How to Configure
Attachment	VLAN	Select **0** to specify that the port handles untagged packets. Select **1** through **4000** to specify that the port handles tagged packets. NOTE: VLAN ID 4094 is reserved for a native VLAN in an OVSDB environment. Specifying this VLAN ID results in an error message. Do not specify this VLAN ID or any VLAN ID not in the accepted range.

Related Documentation

- OVSDB and VXLAN Configuration Workflows for VMware NSX Environment on page 31

Example: Setting Up a VXLAN Layer 2 Gateway and OVSDB Connections in a VMware NSX Environment (Trunk Interfaces Supporting Untagged Packets)

In a physical network, a Juniper Networks device that supports Virtual Extensible LAN (VXLAN) can function as a hardware virtual tunnel endpoint (VTEP). In this role, the Juniper Networks device encapsulates Layer 2 Ethernet frames received from software applications that run directly on a physical server in VXLAN packets. The VXLAN packets are tunneled over a Layer 3 transport network. Upon receipt of the VXLAN packets, software VTEPs in the virtual network de-encapsulate the packets and forward the packets to virtual machines (VMs).

In this VXLAN environment, you can also include VMware NSX controllers and implement the Open vSwitch Database (OVSDB) management protocol on the Juniper Networks device that functions as a hardware VTEP. The Junos OS implementation of OVSDB provides a means through which VMware NSX controllers and Juniper Networks devices can exchange MAC addresses of entities in the physical and virtual networks. This exchange of MAC addresses enables the Juniper Networks device that functions as a hardware VTEP to forward traffic to software VTEPs in the virtual network and software VTEPs in the virtual network to forward traffic to the Junipet Networks device in the physical network.

This example explains how to configure a Juniper Networks device that supports VXLAN as a hardware VTEP. (The VTEP serves as a Layer 2 gateway.) This example also explains how to configure this device with an OVSDB connection to an NSX controller.

In this example, only one VXLAN is deployed. Given this scenario, the packets exchanged between an application running on a physical server and a VM in the VXLAN are untagged. As a result, the QFX Series switch dynamically configures a logical trunk interface for the

 Copyright © 2018, Juniper Networks, Inc.

connection between the physical server and the switch, as well as a native VLAN. The native VLAN enables the trunk interface to handle the untagged packets.

- Requirements on page 51
- Overview and Topology on page 51
- Non-OVSDB and Non-VXLAN Configuration on page 54
- OVSDB and VXLAN Configuration on page 55
- Verification on page 56

Requirements

This example includes the following hardware and software components:

- A physical server on which software applications directly run.
- A QFX10002 switch running Junos OS software 15.1X53-D30 or later.
- On the QFX Series switch, physical interface ge-1/0/0 provides a connection to physical server 1.
- A cluster of five NSX controllers. (In this example, you explicitly configure a connection with one NSX controller.)
- NSX Manager.
- A service node that handles the replication and forwarding of Layer 2 broadcast, unknown unicast, and multicast (BUM) traffic within the VXLAN used in this example.
- A host that includes VMs managed by a hypervisor, which includes a software VTEP.

Before you begin:

- Create an SSL private key and certificate, and install them in the **/var/db/certs** directory of the QFX Series switch. See "Creating and Installing an SSL Key and Certificate on a Juniper Networks Device for Connection with SDN Controllers" on page 37.
- Using NSX Manager, specify the IP address of the service node.

For information about using NSX Manager, see the documentation that accompanies these VMware products.

Overview and Topology

Figure 6 on page 52 shows a topology in which a software application running directly on physical server 1 in the physical network needs to communicate with virtual machine VM 1 in VXLAN 1 and vice versa.

Figure 6: VXLAN-OVSDB Layer 2 Gateway Topology

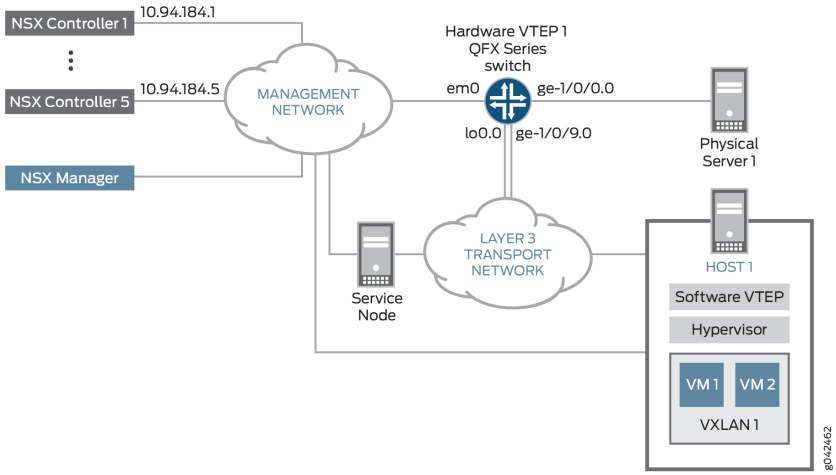

To establish communication between the software application on physical server 1 and VM 1 in VXLAN 1, a connection with an NSX controller is explicitly configured on the management interface of the QFX Series switch by using the Junos OS CLI.

Also, some entities in the VXLAN-OVSDB topology must be configured in both NSX Manager and on the QFX Series switch. Table 12 on page 52 provides a summary of the entities that must be configured and where they must be configured.

Table 12: NSX Manager and Junos OS Entities That Must Be Configured

Entities	What Must Be Configured in NSX Manager	What Must Be Configured on a QFX Series Switch
VXLAN 1	Logical switch for VXLAN 1	VXLAN 1 NOTE: The QFX Series switch dynamically configures this VXLAN.
Physical interface (ge-1/0/0) between physical server 1 and QFX Series switch	A gateway service. For gateway service type, select VTEP L2 Gateway service.	OVSDB management. Specify that interface ge-1/0/0 is managed by OVSDB.
One logical interface (ge-1/0/0.0) associated with VXLAN 1	One logical switch port for VXLAN 1. For this port, specify VLAN number 0. NOTE: A VLAN number of 0 indicates that the port must handle untagged packets.	One logical interface (ge-1/0/0.0) for VXLAN 1. NOTE: The QFX Series switch dynamically configures this logical interface.
QFX Series switch (hardware VTEP 1)	Gateway	–

In NSX Manager, a logical switch for VXLAN 1 is configured. In this configuration, a VXLAN network identifier (VNI) of 100 is specified. Also, the universally unique identifier (UUID) that NSX Manager assigns to the logical switch is

Copyright © 2018, Juniper Networks, Inc.

28805c1d-0122-495d-85df-19abd647d772. Based on this configuration, the QFX Series switch dynamically creates the following configuration for a Junos OS-equivalent VXLAN:

```
set vlans 28805c1d-0122-495d-85df-19abd647d772 vxlan vni 100
```

Based on the gateway service and logical switch port configuration (VLAN number 0) in NSX Manager, the QFX Series switch dynamically creates the following configuration for a Junos OS-equivalent interface:

```
set interfaces ge-1/0/0 flexible-vlan-tagging
set interfaces ge-1/0/0 native-vlan-id 4094
set interfaces ge-1/0/0 encapsulation extended-vlan-bridge
set interfaces ge-1/0/0 unit 0 vlan-id 4094
set vlans 28805c1d-0122-495d-85df-19abd647d772 interface ge-1/0/0.0
```

This configuration sets physical interface ge-1/0/0 as a trunk interface. It also configures a native VLAN with an ID of 4094. The configuration creates logical interface ge-1/0/0.0 and specifies that it is a member of the native VLAN. As a result, logical interface ge-1/0/0.0 handles incoming untagged packets.

The configuration also associates logical interface ge-1/0/0.0 with VXLAN 28805c1d-0122-495d-85df-19abd647d772.

Table 13 on page 53 provides a summary of the VXLAN-OVSDB topology components that are configured on the QFX Series switch and the configuration settings for each component.

Table 13: Components of the Topology for Setting Up a VXLAN Layer 2 Gateway and OVSDB Connections

Component	Setting
NSX controller	IP address: 10.94.184.1
OVSDB-managed physcal interface	Interface name: ge-1/0/0 Native VLAN ID: 4094
Logical interface	NOTE: The QFX Series switch dynamically creates this logical interface configuration, which is based on the gateway service configuration and logical switch port configuration in NSX Manager. Therefore, no manual configuration is required. Interface name: ge-1/0/0.0 Interface type: trunk Member of native VLAN 4094 Associated with VXLAN 28805c1d-0122-495d-85df-19abd647d772

Table 13: Components of the Topology for Setting Up a VXLAN Layer 2 Gateway and OVSDB Connections (continued)

Component	Setting
OVSDB-managed VXLAN	NOTE: The QFX Series switch dynamically creates this VXLAN configuration, which is based on the logical switch configuration in NSX Manager. Therefore, no manual configuration is required. For VXLAN 1: VXLAN name: 28805c1d-0122-495d-85df-19abd647d772 VNI: 100
OVSDB tracing operations	Filename: /var/log/ovsdb File size: 10 MB Flag: All
Hardware VTEP source identifier	Source interface: loopback (lo0.0) Source IP address: 10.17.17.17/32
Handling of Layer 2 BUM traffic in VXLAN 28805c1d-0122-495d-85df-19abd647d772	Service node NOTE: By default, one or more service nodes handle Layer 2 BUM traffic within a VXLAN; therefore, no manual configuration is required.

Non-OVSDB and Non-VXLAN Configuration

CLI Quick Configuration

To quickly configure this example, copy the following commands, paste them into a text file, remove any line breaks, change any details necessary to match your configuration, copy and paste the commands into the CLI at the [**edit**] hierarchy level, and then enter **commit** from configuration mode.

```
set interfaces ge-1/0/9 unit 0 family inet address 10.40.40.1/24
set routing-options static route 10.19.19.19/32 next-hop 10.40.40.2
set routing-options router-id 10.17.17.17
set protocols ospf area 0.0.0.0 interface lo0.0
set protocols ospf area 0.0.0.0 interface ge-1/0/9.0
```

Step-by-Step Procedure

To configure the Layer 3 network over which the packets exchanged between the physical server and VMs are tunneled:

1. Configure the Layer 3 interface.

```
[edit interfaces]
user@switch# set ge-1/0/9 unit 0 family inet address 10.40.40.1/24
```


Copyright © 2018, Juniper Networks, Inc.

2. Set the routing options.

```
[edit routing-options]
user@switch# set static route 10.19.19.19/32 next-hop 10.40.40.2
user@switch# set router-id 10.17.17.17
```

3. Configure the routing protocol.

```
[edit protocols]
user@switch# set ospf area 0.0.0.0 interface lo0.0
user@switch# set ospf area 0.0.0.0 interface ge-1/0/9.0
```

OVSDB and VXLAN Configuration

CLI Quick Configuration

To quickly configure this example, copy the following commands, paste them into a text file, remove any line breaks, change any details necessary to match your configuration, copy and paste the commands into the CLI at the [**edit**] hierarchy level, and then enter **commit** from configuration mode.

```
set switch-options ovsdb-managed
set protocols ovsdb controller 10.94.184.1
set protocols ovsdb interfaces ge-1/0/0
set protocols ovsdb traceoptions file ovsdb
set protocols ovsdb traceoptions file size 10m
set protocols ovsdb traceoptions flag all
set interfaces lo0 unit 0 family inet address 10.17.17.17/32 primary
set interfaces lo0 unit 0 family inet address 10.17.17.17/32 preferred
set switch-options vtep-source-interface lo0.0
```

Step-by-Step Procedure

To configure the QFX Series switch as a hardware VTEP with an OVSDB connection to an NSX controller:

1. Enable the QFX Series switch to dynamically configure OVSDB-managed VXLANs and associated interfaces.

```
[edit switch-options]
user@switch# ovsdb-managed
```

2. Explicitly configure a connection with an NSX controller.

```
[edit protocols]
user@switch# set ovsdb controller 10.94.184.1
```

3. Specify that the interface between hardware VTEP 1 and physical server 1 is managed by OVSDB.

```
[edit protocols]
```

```
user@switch# set ovsdb interfaces ge-1/0/0
```

4. Set up OVSDB tracing operations.

```
[edit protocols]
user@switch# set ovsdb traceoptions file ovsdb
user@switch# set ovsdb traceoptions file size 10m
user@switch# set ovsdb traceoptions flag all
```

5. Specify an IP address for the loopback interface. This IP address serves as the source IP address in the outer header of any VXLAN-encapsulated packet.

```
[edit interfaces]
user@switch# set lo0 unit 0 family inet address 10.17.17.17/32 primary
user@switch# set lo0 unit 0 family inet address 10.17.17.17/32 preferred
```

6. Set the loopback interface as the interface that identifies hardware VTEP 1.

```
[edit switch-options]
user@switch# set vtep-source-interface lo0.0
```

7. In NSX Manager, configure a logical switch for VXLAN 1. See the VMware documentation that accompanies NSX Manager.

8. In NSX Manager, configure a gateway for the QFX Series switch, and configure a gateway service and logical switch port for the logical interface (ge-1/0/0.0). See "VMware NSX Configuration for Juniper Networks Devices Functioning as Virtual Tunnel Endpoints" on page 47.

Verification

Confirm that the configuration is working properly:

- Verifying the Logical Switch Configuration on page 56
- Verifying the MAC Address of VM 1 on page 57
- Verifying the NSX Controller Connection on page 57
- Verifying the OVSDB-Managed Interface on page 58

Verifying the Logical Switch Configuration

Purpose Verify that the configuration of the logical switch with the UUID of 28805c1d-0122-495d-85df-19abd647d772 is present in the OVSDB schema for physical devices and that the Flags field of the **show ovsdb logical switch** output displays **Created by both**.

Copyright © 2018, Juniper Networks, Inc.

Action From operational mode, enter the **show ovsdb logical-switch** command.

```
user@switch> show ovsdb logical-switch
```

```
Logical switch information:
Logical Switch Name: 28805c1d-0122-495d-85df-19abd647d772
Flags: Created by both
VNI: 100
Num of Remote MAC: 1
Num of Local MAC: 0
```

Meaning The output verifies that the configuration for the logical switch is present. The **Created by both** state indicates that the logical switch was configured in NSX Manager, and that the QFX Series switch dynamically created the corresponding VXLAN. In this state, the logical switch and the VXLAN are operational.

If the state of the logical switch is something other than **Created by both**, see "Troubleshooting a Nonoperational Logical Switch and Corresponding Junos OS OVSDB-Managed VXLAN" on page 87.

Verifying the MAC Address of VM 1

Purpose Verify that the MAC address of VM 1 is present in the OVSDB schema.

Action From operational mode, enter the **show ovsdb mac remote** command.

```
user@switch> show ovsdb mac remote
```

```
Logical Switch Name: 28805c1d-0122-495d-85df-19abd647d772
  Mac                    IP                 Encapsulation      Vtep
  Address                Address                               Address
  a8:59:5e:f6:38:90      0.0.0.0            Vxlan over Ipv4    10.17.17.17
```

Meaning The output shows that the MAC address for VM 1 is present and is associated with the logical switch with the UUID of 28805c1d-0122-495d-85df-19abd647d772. Given that the MAC address is present, VM 1 is reachable through the QFX Series switch, which functions as a hardware VTEP.

Verifying the NSX Controller Connection

Purpose Verify that the connection with the NSX controller is up.

Action From operational mode, enter the **show ovsdb controller** command to verify that the controller connection state is **up**.

```
user@switch> show ovsdb controller
```

```
VTEP controller information:
Controller IP address: 10.94.184.1
Controller protocol: ssl
Controller port: 6632
Controller connection: up
Controller seconds-since-connect: 542325
Controller seconds-since-disconnect: 542346
Controller connection status: active
```

Meaning The output shows that the connection state of the NSX controller is up, in addition to other information about the controller. The **up** state of the NSX controller indicates that OVSDB is enabled on the QFX Series switch.

Verifying the OVSDB-Managed Interface

Purpose Verify that interface ge-1/0/0.0 is managed by OVSDB.

Action From operational mode, enter the **show ovsdb interface** command to verify that interface ge-1/0/0.0 is managed by OVSDB.

```
user@switch> show ovsdb interface
```

```
Interface  VLAN ID Bridge-domain
ge-1/0/0   0       28805c1d-0122-495d-85df-19abd647d772
```

Meaning The output shows that interface ge-1/0/0 is managed by OVSDB. It also indicates that the interface is associated with VXLAN 28805c1d-0122-495d-85df-19abd647d772, which has a VLAN ID of 0.

Example: Setting Up a VXLAN Layer 2 Gateway and OVSDB Connections in a VMware NSX Environment (Trunk Interfaces Supporting Tagged Packets)

In a physical network, a Juniper Networks device that supports Virtual Extensible LAN (VXLAN) can function as a hardware virtual tunnel endpoint (VTEP). In this role, the Juniper Networks device encapsulates Layer 2 Ethernet frames received from software applications that run directly on a physical server in VXLAN packets. The VXLAN packets are tunneled over a Layer 3 transport network. Upon receipt of the VXLAN packets, software VTEPs in the virtual network de-encapsulate the packets and forward the packets to virtual machines (VMs).

In this VXLAN environment, you can also include VMware NSX controllers and implement the Open vSwitch Database (OVSDB) management protocol on the Juniper Networks

 Copyright © 2018, Juniper Networks, Inc.

device that functions as a hardware VTEP. The Junos OS implementation of OVSDB provides a means through which VMware NSX controllers and Juniper Networks devices can exchange MAC addresses of entities in the physical and virtual networks. This exchange of MAC addresses enables the Juniper Networks device that functions as a hardware VTEP to forward traffic to software VTEPs in the virtual network and software VTEPs in the virtual network to forward traffic to the Junipet Networks device in the physical network.

This example explains how to configure a Juniper Networks device that supports VXLAN as a hardware VTEP. (The VTEP serves as a Layer 2 gateway.) This example also explains how to configure this device with an OVSDB connection to an NSX controller.

Starting with Junos OS Release 14.1X53-D15 for QFX5100 switches, 15.1X53-D10 for QFX10002 switches, 15.1X53-D30 for QFX10008 switches, 15.1X53-D60 for QFX10016 switches, 15.1X53-D210 for QFX5110 and QFX5200 switches, and 18.1R1 for QFX5210 switches, the dynamic configuration of trunk interfaces and their association with an OVSDB-managed VXLAN is supported. In this example, an application running directly on a physical server needs to communicate with a VM in a VXLAN, while another application on the physical server needs to communicate with VMs in another VXLAN. Therefore, the packets exchanged between the applications running on the physical server and the respective VMs with which they must communicate are tagged. As a result, a trunk interface is used for the connection between the physical server and the Juniper Networks device.

- Requirements on page 59
- Overview and Topology on page 60
- Non-OVSDB and Non-VXLAN Configuration on page 63
- OVSDB and VXLAN Configuration on page 64
- Verification on page 66

Requirements

This example includes the following hardware and software components:

- A physical server on which software applications directly run.
- A Juniper Networks switch that supports VXLAN and OVSDB. This switch can be a QFX5100 switch running Junos OS Release 14.1X53-D15 or later.
- On the Juniper Networks switch, physical interface ge-1/0/0 provides a connection to physical server 1.
- A cluster of five NSX controllers. (In this example, you explicitly configure a connection with one NSX controller.)
- NSX Manager.
- A service node that handles the replication and forwarding of Layer 2 broadcast, unknown unicast, and multicast (BUM) traffic within the VXLANs.
- Two hosts that include VMs. Each host is managed by a hypervisor, and each hypervisor includes a software VTEP.

Before you begin the configuration, you must perform the following tasks:

- Create an SSL private key and certificate, and install them in the **/var/db/certs** directory of the Juniper Networks switch. See "Creating and Installing an SSL Key and Certificate on a Juniper Networks Device for Connection with SDN Controllers" on page 37.
- Using NSX Manager, specify the IP address of the service node.

For information about using NSX Manager, see the documentation that accompanies NSX Manager.

Overview and Topology

Figure 6 on page 52 shows a topology in which a software application running directly on physical server 1 in the physical network needs to communicate with virtual machine VM 1 in VXLAN 1 and vice versa, and another software application on physical server 1 needs to communicate with virtual machines VM 3 and VM 4 in VXLAN 2 and vice versa.

Figure 7: VXLAN/OVSDB Layer 2 Gateway Topology

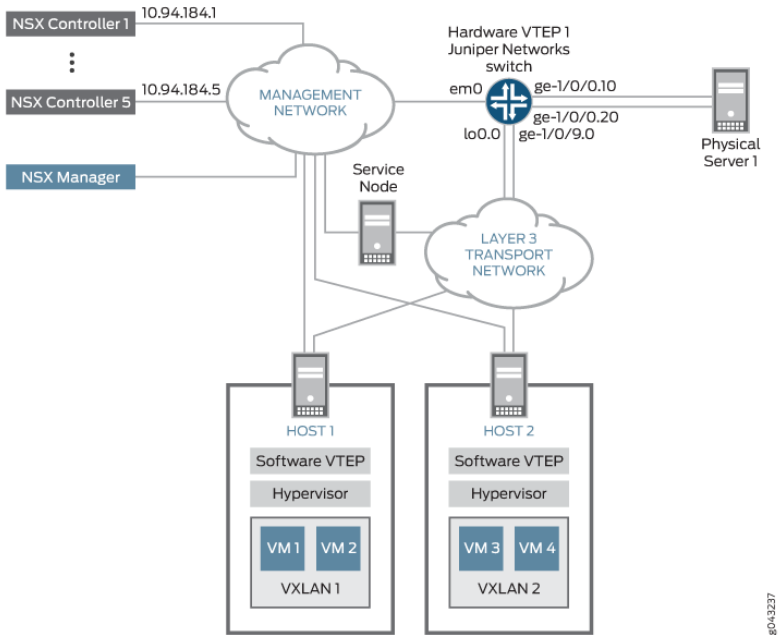

To establish communication between the software applications on physical server 1 and the VMs in VXLANs 1 and 2, some entities in the VXLAN-OVSDB topology must be configured in both NSX Manager and on the Juniper Networks switch. Table 14 on page 61 provides a summary of the entities that must be configured and where they must be configured.

Copyright © 2018, Juniper Networks, Inc.

NOTE: The term used for an entity configured in NSX Manager can differ from the term used for essentially the same entity configured on the Junos Network switch. To prevent confusion, Table 14 on page 61 shows the NSX Manager and Junos OS entities side-by-side.

Table 14: NSX Manager and Junos OS Entities That Must Be Configured

Entities	What Must Be Configured In NSX Manager	What Must Be Configured on Juniper Networks Switch
VXLAN 1 VXLAN 2	Logical switch for VXLAN 1 Logical switch for VXLAN 2	VXLAN 1 VXLAN 2 NOTE: The Juniper Networks switch dynamically configures these VXLANs.
Interface (ge-1/0/0) between physical server 1 and Juniper Networks switch	A gateway service. For gateway service type, select VTEP L2 gateway service.	OVSDB management. Specify that interface ge-1/0/0 is managed by OVSDB.
One logical interface associated with VXLAN 1 One logical interface associated with VXLAN 2	One logical switch port for VXLAN 1. For this port, specify VLAN number 10. One logical switch port for VXLAN 2. For this port, specify VLAN number 20. NOTE: A VLAN number from **1** through **4000** indicates that the port is a trunk port.	One logical interface (ge-1/0/0.10) for VXLAN 1 One logical interface (ge-1/0/0.20) for VXLAN 2 NOTE: The Juniper Networks switch dynamically configures these logical interfaces.
Juniper Networks switch (hardware VTEP 1)	Gateway	–

Based on the configuration of the entities in NSX Manager as described in Table 14 on page 61, the Juniper Networks switch dynamically creates VXLANs 1 and 2 and their associated logical interfaces. Table 15 on page 62 provides the relevant NSX Manager configuration and the resulting VXLANs and associated logical interfaces that the Juniper Networks switch dynamically configures.

Table 15: NSX Manager Configurations and Dynamic Configurations by Juniper Networks Switch

NSX Manager Configuration: Logical Switch and Logical Switch Port	VXLANs and Associated Logical Interfaces Dynamically Configured By Juniper Networks Switch
Logical switch configuration: UUID: 28805c1d-0122-495d-85df-19abd647d772 VNI: 100 Logical switch port configuration: VLAN ID: 10	For VXLAN 1: **set vlans 28805c1d-0122-495d-85df-19abd647d772 vxlan vni 100** For associated logical interface ge-1/0/0.10: **set interfaces ge-1/0/0 flexible-vlan-tagging** **set interfaces ge-1/0/0 encapsulation extended-vlan-bridge** **set interfaces ge-1/0/0 unit 10 vlan-id 10** **set vlans 28805c1d-0122-495d-85df-19abd647d772 interfaces ge-1/0/0.10**
Logical switch configuration: UUID: 9acc24b3-7b0a-4c2e-b572-3370c3e1acff VNI: 200 Logical switch port configuration: VLAN ID: 20	For VXLAN 2: **set vlans 9acc24b3-7b0a-4c2e-b572-3370c3e1acff vxlan vni 200** For associated logical interface ge-1/0/0.20: **set interfaces ge-1/0/0 flexible-vlan-tagging** **set interfaces ge-1/0/0 encapsulation extended-vlan-bridge** **set interfaces ge-1/0/0 unit 20 vlan-id 20** **set vlans 9acc24b3-7b0a-4c2e-b572-3370c3e1acff interfaces ge-1/0/0.20**

For VXLANs 1 and 2, the Juniper Networks switch uses the UUIDs and VNI values that were provided for the corresponding logical switches.

In the logical switch port configurations in NSX Manager, VLAN ID values 10 and 20 and logical switch mappings are specified. As a result, the Juniper Networks switch creates logical interfaces ge-1/0/0.10 and ge-1/0/0.20, respectively. Both of these logical interfaces function as trunk interfaces. The Juniper Networks switch also maps the logical interfaces ge-1/0/0.10 and ge-1/0/0.20 to their respective VXLANs.

Based on the configurations generated by the Juniper Networks switch, the interface ge-1/0/0.10 accepts packets with a VLAN tag of 10 from VXLAN 1, and interface ge-1/0/0.20 accepts packets with a VLAN tag of 20 from VXLAN 2. On receiving packets from VXLAN 1, a VLAN tag of 100 is added to the packets, and a VLAN tag of 200 is added to packets from VXLAN 2. These tags are added to the respective packet streams to map the VLAN ID in a particular VXLAN to the corresponding VNI.

Table 13 on page 53 provides a summary of the components that are configured on the Juniper Networks switch. Unless noted, all configurations are performed manually in the Junos OS CLI.

Table 16: Components for Two VXLAN Topologies Configured on a Juniper Networks Switch that Functions as a Hardware VTEP

Components	Settings
NSX controller	IP address: 10.94.184.1

Copyright © 2018, Juniper Networks, Inc.

Table 16: Components for Two VXLAN Topologies Configured on a Juniper Networks Switch that Functions as a Hardware VTEP (continued)

Components	Settings
OVSDB-managed interface	Interface name: ge-1/0/0
VXLAN 1 and associated logical interface	NOTE: The Juniper Networks switch dynamically configures the VXLAN and associated logical interface, which are based on the logical switch and logical switch port configurations in NSX Manager. Therefore, no manual configuration is required. VXLAN name: 28805c1d-0122-495d-85df-19abd647d772 VNI: 100 Logical interface name: ge-1/0/0.10 VLAN ID: 10 Interface type: trunk
VXLAN 2 and associated logical interface	NOTE: The Juniper Networks switch dynamically configures the VXLAN and associated interface, which are based on the logical switch and logical switch port configurations in NSX Manager. Therefore, no manual configuration is required. VXLAN name: VXLAN 9acc24b3-7b0a-4c2e-b572-3370c3e1acff VNI: 200 Logical interface name: ge-1/0/0.20 VLAN ID: 20 Interface type: trunk
OVSDB tracing operations	Filename: /var/log/ovsdb File size: 10 MB Flag: All
Hardware VTEP source identifier	Source interface: loopback (lo0.0) Source IP address: 10.17.17.17/32
Handling of Layer 2 BUM traffic within VXLAN 28805c1d-0122-495d-85df-19abd647d772 and within VXLAN 9acc24b3-7b0a-4c2e-b572-3370c3e1acff	Service node NOTE: By default, one or more service nodes handle Layer 2 BUM traffic in a VXLAN; therefore, no configuration is required.

Non-OVSDB and Non-VXLAN Configuration

CLI Quick Configuration

To quickly configure this example, copy the following commands, paste them into a text file, remove any line breaks, change any details necessary to match your configuration, copy and paste the commands into the CLI at the [**edit**] hierarchy level, and then enter **commit** from configuration mode.

```
set interfaces ge-1/0/9 unit 0 family inet address 10.40.40.1/24
set routing-options static route 10.19.19.19/32 next-hop 10.40.40.2
set routing-options router-id 10.17.17.17
set protocols ospf area 0.0.0.0 interface lo0.0
set protocols ospf area 0.0.0.0 interface ge-1/0/9.0
```

Step-by-Step Procedure

To configure the Layer 3 network over which the packets exchanged between physical server 1 and VM1 are tunneled:

1. Configure the Layer 3 interface.

```
[edit interfaces]
user@switch# set ge-1/0/9 unit 0 family inet address 10.40.40.1/24
```

2. Set the routing options.

```
[edit routing-options]
user@switch# set static route 10.19.19.19/32 next-hop 10.40.40.2
user@switch# set router-id 10.17.17.17
```

3. Configure the routing protocol.

```
[edit protocols]
user@switch# set ospf area 0.0.0.0 interface lo0.0
user@switch# set ospf area 0.0.0.0 interface ge-1/0/9.0
```

OVSDB and VXLAN Configuration

CLI Quick Configuration

To quickly configure this example, copy the following commands, paste them into a text file, remove any line breaks, change any details necessary to match your configuration, copy and paste the commands into the CLI at the [**edit**] hierarchy level, and then enter **commit** from configuration mode.

```
set switch-options ovsdb-managed
set protocols ovsdb controller 10.94.184.1
set protocols ovsdb interfaces ge-1/0/0
set protocols ovsdb traceoptions file ovsdb
set protocols ovsdb traceoptions file size 10m
set protocols ovsdb traceoptions flag all
set interfaces lo0 unit 0 family inet address 10.17.17.17/32 primary
set interfaces lo0 unit 0 family inet address 10.17.17.17/32 preferred
set switch-options vtep-source-interface lo0.0
```


Copyright © 2018, Juniper Networks, Inc.

Step-by-Step Procedure

To configure the Juniper Networks switch as hardware VTEP 1 and with an OVSDB connection to an NSX controller:

1. Enable the Juniper Networks switch to dynamically configure OVSDB-managed VXLANs and associated interfaces.

```
[edit switch-options]
user@switch# set ovsdb-managed
```

2. Explicitly configure a connection with an NSX controller.

```
[edit protocols]
user@switch# set ovsdb controller 10.94.184.1
```

3. Specify that interface ge-1/0/0 is managed by OVSDB.

```
[edit protocols]
user@switch# set ovsdb interfaces ge-1/0/0
```

4. Set up OVSDB tracing operations.

```
[edit protocols]
user@switch# set ovsdb traceoptions file ovsdb
user@switch# set ovsdb traceoptions file size 10m
user@switch# set ovsdb traceoptions flag all
```

5. Specify an IP address for the loopback interface. This IP address serves as the source IP address in the outer header of any VXLAN-encapsulated packets.

```
[edit interfaces]
user@switch# set lo0 unit 0 family inet address 10.17.17.17/32 primary
user@switch# set lo0 unit 0 family inet address 10.17.17.17/32 preferred
```

6. Set the loopback interface as the interface that identifies hardware VTEP 1.

```
[edit switch-options]
user@switch# set vtep-source-interface lo0.0
```

7. In NSX Manager, configure a logical switch for VXLAN 1 and a logical switch for VXLAN 2. See the documentation that accompanies NSX Manager.

8. In NSX Manager, configure a gateway for the Juniper Networks switch, a gateway service for OVSDB-managed interface ge-1/0/0, and a logical switch port for logical interface ge-1/0/0.10, which is associated with VXLAN 1, and a logical switch port for logical interface ge-1/0/0.20, which is associated with VXLAN 2.

Copyright © 2018, Juniper Networks, Inc.

See "VMware NSX Configuration for Juniper Networks Devices Functioning as Virtual Tunnel Endpoints" on page 47.

Verification

Confirm that the configuration is working properly.

- Verifying the Logical Switch Configuration on page 66
- Verifying the MAC Addresses of VM 1, VM 3, and VM 4 on page 66
- Verifying the NSX Controller Connection on page 67
- Verifying the OVSDB-Managed Interface on page 67

Verifying the Logical Switch Configuration

Purpose Verify that the configuration of logical switches with the UUIDs of 28805c1d-0122-495d-85df-19abd647d772 and 9acc24b3-7b0a-4c2e-b572-3370c3e1acff are present in the OVSDB schema for physical devices and that the Flags field of the **show ovsdb logical-switch** output is Created by both.

Action From operational mode, enter the **show ovsdb logical-switch** command.

```
user@switch> show ovsdb logical-switch
```

```
Logical switch information:
Logical Switch Name: 28805c1d-0122-495d-85df-19abd647d772
Flags: Created by both
VNI: 100
Num of Remote MAC: 1
Num of Local MAC: 0
Logical Switch Name: 9acc24b3-7b0a-4c2e-b572-3370c3e1acff
Flags: Created by both
VNI: 200
Num of Remote MAC: 2
Num of Local MAC: 0
```

Meaning The output verifies that the configuration for the logical switches is present. The **Created by both** state indicates that the logical switches were configured in NSX Manager, and that the Juniper Networks switch dynamically configured the corresponding VXLANs. In this state, the logical switches and VXLANs are operational.

If the state of the logical switches is something other than **Created by both**, see "Troubleshooting a Nonoperational Logical Switch and Corresponding Junos OS OVSDB-Managed VXLAN" on page 87.

Verifying the MAC Addresses of VM 1, VM 3, and VM 4

Purpose Verify that the MAC addresses of VM 1, VM 3, and VM 4 are present in the OVSDB schema.

 Copyright © 2018, Juniper Networks, Inc.

Action From operational mode, enter the **show ovsdb mac remote** command.

```
user@switch> show ovsdb mac remote
```

```
Logical Switch Name: 28805c1d-0122-495d-85df-19abd647d772
  Mac                    IP                 Encapsulation      Vtep
  Address                Address                               Address
  a8:59:5e:f6:38:90      0.0.0.0            Vxlan over Ipv4    10.17.17.17
Logical Switch Name: 9acc24b3-7b0a-4c2e-b572-3370c3e1acff
 Mac                    IP                 Encapsulation      Vtep
  Address                Address                               Address
  00:23:9c:5e:a7:f0      0.0.0.0            Vxlan over Ipv4    10.17.17.17
  00:23:9c:5e:a7:f0      0.0.0.0            Vxlan over Ipv4    10.17.17.17
```

Meaning The output shows that the MAC addresses for VM 1, VM 3, and VM 4 are present and are associated with their respective logical switches. Given that the MAC addresses are present, VM 1, VM 3, and VM 4 are reachable through the Juniper Networks switch, which functions as a hardware VTEP.

Verifying the NSX Controller Connection

Purpose Verify that the connection with the NSX controller is up.

Action From operational mode, enter the **show ovsdb controller** command to verify that the controller connection state is **up**.

```
user@switch> show ovsdb controller
```

```
VTEP controller information:
Controller IP address: 10.94.184.1
Controller protocol: ssl
Controller port: 6632
Controller connection: up
Controller seconds-since-connect: 542325
Controller seconds-since-disconnect: 542346
Controller connection status: active
```

Meaning The output shows that the connection state of the NSX controller is **up**, in addition to other information about the controller. By virtue of this connection being up, OVSDB is enabled on the Juniper Networks switch.

Verifying the OVSDB-Managed Interface

Purpose Verify that interface ge-1/0/0 is managed by OVSDB.

Action From operational mode, enter the **show ovsdb interface** command, and verify that logical interfaces ge-1/0/0.10 and ge-1/0/0.20 are managed by OVSDB.

```
user@switch> show ovsdb interface
Interface  VLAN ID Bridge-domain
ge-1/0/0   10      28805c1d-0122-495d-85df-19abd647d772
ge-1/0/0   20      9acc24b3-7b0a-4c2e-b572-3370c3e1acff
```

Meaning The output shows that logical interfaces **ge-1/0/0.10** and **ge-1/0/0.20** are managed by OVSDB. It also indicates that interface **ge-1/0/0.10** is associated with VXLAN **28805c1d-0122-495d-85df-19abd647d772** and interface **ge-1/0/0.20** is associated with VXLAN **9acc24b3-7b0a-4c2e-b572-3370c3e1acff**.

Release History Table

Release	Description
14.1X53-D15	Starting with Junos OS Release 14.1X53-D15 for QFX5100 switches, 15.1X53-D10 for QFX10002 switches, 15.1X53-D30 for QFX10008 switches, 15.1X53-D60 for QFX10016 switches, 15.1X53-D210 for QFX5110 and QFX5200 switches, and 18.1R1 for QFX5210 switches, the dynamic configuration of trunk interfaces and their association with an OVSDB-managed VXLAN is supported.

Verifying That a Logical Switch and Corresponding Junos OS OVSDB-Managed VXLAN Are Working Properly

Purpose Verify the following:

- A logical switch, which is configured in an NSX environment, or a virtual network, which is configured in a Contrail environment, is learning MAC addresses in their respective environments.
- The corresponding OVSDB-managed Virtual Extensible LAN (VXLAN), which is configured on a Juniper Networks device, is learning MAC addresses in the Junos OS environment.
- The logical switch or virtual network and OVSDB-managed VXLAN are exchanging the MAC addresses learned in their respective environments so that virtual and physical servers can communicate.

Action To verify that a logical switch or virtual network and its corresponding OVSDB-managed VXLAN are learning and exchanging MAC addresses in their respective environments, enter the **show ovsdb logical-switch** operational mode command.

```
user@device> show ovsdb logical-switch
Logical switch information:
Logical Switch Name: 28805c1d-0122-495d-85df-19abd647d772
Flags: Created by both
VNI: 100
```

 Copyright © 2018, Juniper Networks, Inc.

```
Num of Remote MAC: 1
Num of Local MAC: 0
```

NOTE: In the Open vSwitch Database (OVSDB) schema for physical devices, the logical switch table stores information about the Layer 2 broadcast domain that you configured in a VMware NSX or Contrail environment. In the NSX environment, the Layer 2 broadcast domain is known as a *logical switch*, while in the Contrail environment, the domain is known as a *virtual network*.

In the context of the **show ovsdb logical-switch** command, the term *logical switch* refers to the logical switch or virtual network that was configured in the NSX or Contrail environments, respectively, and the corresponding configuration that was pushed to the OVSDB schema.

Meaning The output in the Flags field (**Created by both**) indicates that the logical switch or virtual network and its corresponding OVSDB-managed VXLAN are both properly configured. In this state, the logical switch or virtual network and the VXLAN are learning and exchanging MAC addresses in their respective environments.

If the output in the Flags field displays a state other than **Created by both**, see "Troubleshooting a Nonoperational Logical Switch and Corresponding Junos OS OVSDB-Managed VXLAN" on page 87.

Related Documentation

- show ovsdb logical-switch on page 135

Copyright © 2018, Juniper Networks, Inc.

CHAPTER 3

Configuring VXLANs Without an SDN Controller

- Manually Configuring VXLANs on QFX Series and EX4600 Switches on page 71
- Examples: Manually Configuring VXLANs on QFX Series and EX4600 Switches on page 73
- Verifying That a Local VXLAN VTEP Is Configured Correctly on page 83
- Verifying MAC Learning from a Remote VTEP on page 83

Manually Configuring VXLANs on QFX Series and EX4600 Switches

You can configure QFX5100, QFX5110, QFX5200, QFX5210, and EX4600 switches to act as a VTEP. (If the switch is acting as a transit Layer 3 switch for downstream VTEPs, you do not need to perform the steps in this topic as no special configuration is needed.)

NOTE: To ensure that QFX Series and EX4600 switches that are configured to act as VTEPs function properly, you must enable a routing protocol, for example, OSPF, on the VTEPs' loopback interface and Layer 3 interfaces. For more information about configuring OSPF on a VTEP, see "Examples: Manually Configuring VXLANs on QFX Series and EX4600 Switches" on page 73.

- Configuring a Source IP Address on page 71
- Configuring PIM for VXLANs on page 72
- Configuring VXLANs on page 72

Configuring a Source IP Address

On a switch that will act as a VTEP, you must configure an IP address that will be used as the source address in the outer IP header of the VXLAN packet. This is the VXLAN tunnel source address.

1. Create a reachable IPv4 address on the loopback interface.

```
[edit]
user@switch# set interfaces lo0.0 unit 0 family inet address ip-address
```

2. Configure the address to be used as the tunnel source address.

```
[edit]
user@switch# set switch-options vtep-interface-source lo0.0
```

Configuring PIM for VXLANs

If you are not using an SDN controller to create a VXLAN control plane, you must enable PIM on the switch so that the VTEP can use multicast groups to establish reachability with other VTEPs and to forward BUM traffic.

1. Enable PIM on the interface that connects to the Layer 3 network. This is the interface that performs the VXLAN encapsulation and de-encapsulation.

```
[edit]
user@switch# set protocols pim interface interface-name
```

2. Configure the address of a PIM rendezvous point.

```
[edit]
user@switch# set protocols pim rp static address ip-address
```

Configuring VXLANs

You configure VXLANs under the **vlan** stanza (which is why QFX5100, QFX5110, QFX5200, QFX5210, and EX4600 switches support 4000 VXLANs). You must also configure the server-facing interfaces to be VLAN members.

1. Create a VLAN to VXLAN mapping and assign a multicast group address to the VXLAN. All members of a VXLAN must use the same multicast group address.

```
[edit]
user@switch# set vlans name vlan-id ID vxlan vni ID multicast-group multicast-group-address
```

2. (Optional) Configure the switch to retain the original VLAN tag (in the inner Ethernet packet) after VXLAN encapsulation. By default, the original tag is dropped when the packet is encapsulated.

```
[edit]
user@switch# set vlans name vxlan encapsulate-inner-vlan
```

3. (Optional) Configure the switch to de-encapsulate and accept original VLAN tags in VXLAN packets. By default, the original tag is dropped when the packet is encapsulated.

```
[edit]
user@switch# set protocols l2-learning decapsulate-accept-inner-vlan
```

4. Configure server-facing interfaces to support multiple VLANs.

```
[edit]
user@switch# set interfaces interface unit unit family ethernet-switching interface-mode
trunk
```


Copyright © 2018, Juniper Networks, Inc.

```
[edit]
user@switch# set interfaces interface unit unit family ethernet-switching vlan members all
```

You must create a VLAN to VXLAN mapping for each VLAN that will need Layer 2 connectivity over the Layer 3 network.

Related Documentation

- Understanding VXLANs on page 5

Examples: Manually Configuring VXLANs on QFX Series and EX4600 Switches

The following examples show use cases for manually configuring VXLANs on QFX5100, QFX5110, QFX5200, QFX5210, and EX4600 switches.

- Example: Configuring a VXLAN Transit Switch on page 73
- Example: Configuring a VXLAN Layer 2 Gateway on page 75

Example: Configuring a VXLAN Transit Switch

If a QFX Series or EX4600 switch acts as a transit switch for downstream devices acting as VTEPs, you do not need to configure any VXLAN information on the QFX Series or EX4600 switch. You do need to configure PIM on the switch so that it can form the multicast tree required so that the VTEPs can establish reachablity with each other.

- Requirements on page 73
- Overview on page 73
- Configuring PIM on the Transit Switches on page 74

Requirements

This example uses the following hardware and software components:

- Two QFX5100 switches
- Junos OS Release 14.1X53-D10

Overview

This example shows a simple use case in which QFX5100 switches are connected to downstream servers acting as VTEPs. The QFX5100 switches need to forward VXLAN packets between VM 1 on Server 1 and VM 2 on Server 2. Because this configuration allows Layer 2 connectivity between the VMs through the VXLAN tunnels, applications can VMotion between the VMs.

Topology

Figure 8 on page 74 shows QFX 5100 switches configured to forward VXLAN packets for downstream VTEPs.

Figure 8: QFX5100 Acting as a VXLAN Transit Switch

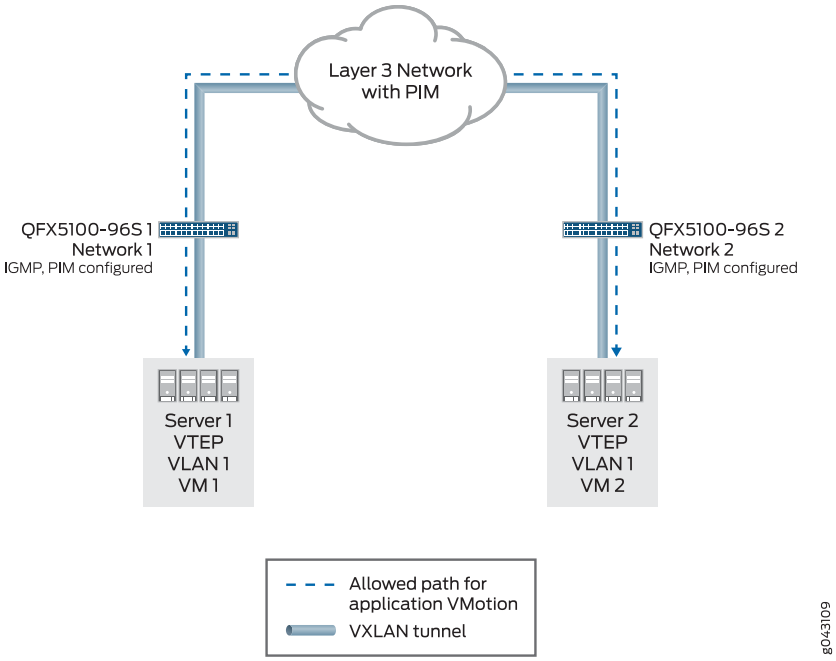

Configuring PIM on the Transit Switches

CLI Quick Configuration

To quickly configure this example, copy the following commands, paste them into a text file, remove any line breaks, change any details necessary to match your network configuration, and then copy and paste the commands into the CLI at the **[edit]** hierarchy level.

```
set protocols pim interface all
set protocols pim rp static address ip-address
```

Step-by-Step Procedure

If you are not using an SDN controller to create a VXLAN control plane, you must enable PIM on each switch so that the VTEP can use multicast groups to advertise its existence and to learn about other VTEPs. (Configuring PIM automatically enables IGMP.) You do not need to perform any VXLAN-specific configuration. Note that you also do not need to configure VLAN 1 on either switch.

1. Enable PIM.

```
[edit]
user@switch# set protocols pim interface all
```

2. Configure the address of a PIM rendezvous point.

```
[edit]
user@switch# set protocols pim rp static address ip-address
```


Copyright © 2018, Juniper Networks, Inc.

See Also

- Understanding VXLANs on page 5

Example: Configuring a VXLAN Layer 2 Gateway

If a QFX Series or EX4600 switch is connected to a downstream server that hosts a VM that needs Layer 2 connectivity with another VM that is reachable only through a Layer 3 network, you must do the following:

- Configure the switch to act as a VTEP—that is, a Layer 2 gateway for downstream Layer 2 devices.
- Configure PIM on the switch so that it can form the multicast tree required for reachability with other VTEPs and to allow BUM traffic to be forwarded between the VTEPs.
- Enable a routing protocol, for example, OSPF, on the VTEP's loopback interface and Layer 3 interfaces.

- Requirements on page 75
- Overview on page 75
- Configuring the Switches on page 76
- Verification on page 80

Requirements

This example uses the following hardware and software components:

- Two QFX5100 switches
- Junos OS Release 14.1X53-D10

Overview

This example shows a use case in which QFX5100 switches act as VTEPs that allow Layer 2 connectivity between VM 1 on Server 1 and VM 2 on Server 2 so that VMotion can occur between the VMs. The servers in this example can be in the same or different data centers—the only constraint is that there must be Layer 3 connectivity between the QFX5100 switches. This allows your network to be very agile in response to demand for server usage or changes in bandwidth requirements.

Note that because the same VLAN exists in both Layer 2 domains and both switches encapsulate the VLAN traffic into the same VXLAN, you do not need a gateway for the VXLAN traffic in the Layer 3 network. The Layer 3 VXLAN packets are routed normally and no de-encapsulation or re-encapsulation is required.

Topology

Figure 9 on page 76 shows QFX5100 switches configured to act as VTEPs.

Figure 9: QFX5100 Acting as a VTEP

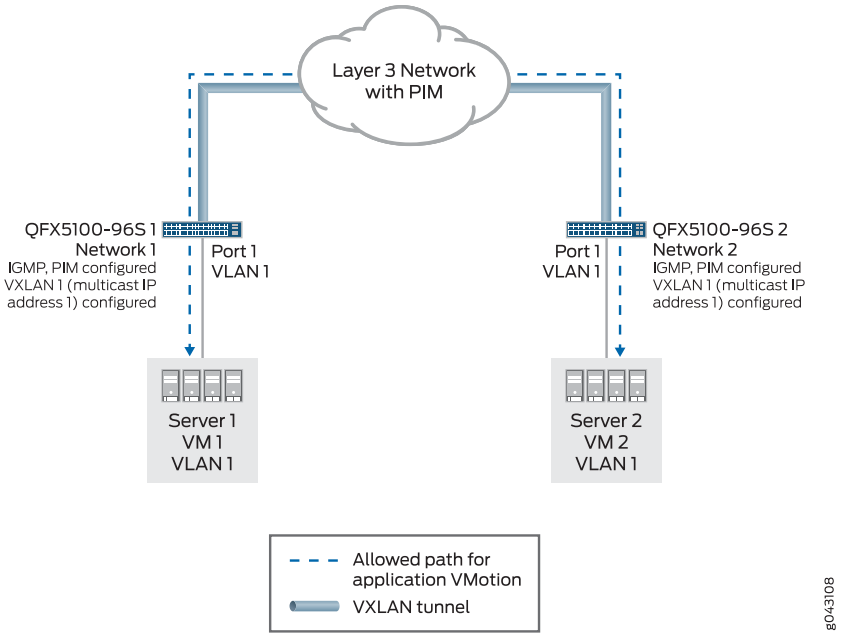

Configuring the Switches

CLI Quick Configuration

To quickly configure the QFX5100-96S 1 in this example, copy the following commands, paste them into a text file, remove any line breaks, change any details necessary to match your network configuration, and then copy and paste the commands into the CLI at the **[edit]** hierarchy level.

```
set interfaces lo0 unit 0 family inet address 10.1.1.1
set switch-options vtep–source-interface lo0.0
set protocols pim interface lo0.0
set protocols ospf area 0.0.0.0 interface lo0.0
set protocols pim interface xe-0/0/0.0
set protocols ospf area 0.0.0.0 interface xe-0/0/0.0
set protocols pim rp static address 10.2.2.2
set vlans VLAN1 vlan-id 100 vxlan vni 100 multicast-group 233.252.0.2
set vlans VLAN1 vxlan encapsulate-inner-vlan
set vlans VLAN1 vxlan unreachable-vtep-aging-timer 600
set protocols l2-learning decapsulate-accept-inner-vlan
set interfaces xe-0/0/0 unit 0 family inet address 10.2.2.100/24
set interfaces xe-0/0/1 unit 0 family ethernet-switching interface-mode trunk
set interfaces xe-0/0/1 unit 0 family ethernet-switching vlan members all
set protocols ospf enable
set protocols ospf area 0.0.0.0 interface em0.0 disable
set protocols ospf area 0.0.0.0 interface all
```

The configuration for QFX5100-96S 2 is identical except for changes to a few of the addresses:

Copyright © 2018, Juniper Networks, Inc.

```
set interfaces lo0 unit 0 family inet address 10.1.1.2
set switch-options vtep–source-interface lo0.0
set protocols pim interface lo0.0
set protocols ospf area 0.0.0.0 interface lo0.0
set protocols pim interface xe-0/0/0.0
set protocols ospf area 0.0.0.0 interface xe-0/0/0.0
set protocols pim rp static address 10.2.2.2
set vlans VLAN1 vlan-id 100 vxlan vni 100 multicast-group 233.252.0.2
set vlans VLAN1 vxlan encapsulate-inner-vlan
set vlans VLAN1 vxlan unreachable-vtep-aging-timer 600
set protocols l2-learning decapsulate-accept-inner-vlan
set interfaces xe-0/0/0 unit 0 family inet address 10.2.2.200/24
set interfaces xe-0/0/1 unit 0 family ethernet-switching interface-mode trunk
set interfaces xe-0/0/1 unit 0 family ethernet-switching vlan members all
set protocols ospf enable
set protocols ospf area 0.0.0.0 interface em0.0 disable
set protocols ospf area 0.0.0.0 interface all
```

NOTE: You must configure the same multicast group address for VLAN1 on both switches.

Step-by-Step Procedure

Perform the following procedure on both switches to set up the example configuration.

1. Create a reachable IPv4 address on the loopback interface.

   ```
   [edit]
   user@switch# set interfaces lo0 unit 0 family inet address 10.1.1.1
   ```

   For switch QFX5100-96S 2, use address **10.1.1.2.**

2. Configure the loopback interface—and therefore, its associated address—to be used as the tunnel source address.

   ```
   [edit]
   user@switch# set switch-options vtep-source-interface lo0.0
   ```

3. Enable PIM on the loopback interface.

   ```
   [edit]
   user@switch# set protocols pim interface lo0.0
   ```

4. Add the loopback interface to OSPF area 0.0.0.0.

   ```
   [edit]
   user@switch# set protocols ospf area 0.0.0.0 interface lo0.0
   ```

5. Enable PIM on the interface that connects to the Layer 3 network.

   ```
   [edit]
   user@switch# set protocols pim interface xe-0/0/0.0
   ```

6. Add the interface that connects to the Layer 3 network to OSPF area 0.0.0.0.

```
[edit]
user@switch# set protocols ospf area 0.0.0.0 interface xe-0/0/0.0
```

7. Configure the address of a PIM rendezvous point.

```
[edit]
user@switch# set protocols pim rp static address 10.2.2.2
```

8. Create a VLAN, map it to a VXLAN, and assign a multicast group address to the VXLAN. All members of a VXLAN must use the same multicast group address.

```
[edit]
user@switch# set vlans VLAN1 vlan-id 100 vxlan vni 100 multicast-group 233.252.0.2
```

In this example, the **vlan-id** and **vni** are both set to **100**. This is done only for simplicity and clarity. You do not need to set the **vlan-id** and **vni** to the same value.

9. (Optional) Configure the switch to retain the original VLAN tag (in the inner Ethernet packet) after VXLAN encapsulation. By default, the original tag is dropped when the packet is encapsulated.

```
[edit]
user@switch# set vlans VLAN1 vxlan encapsulate-inner-vlan
```

10. (Optional) Configure the system to age out the address for the remote VTEP (the other QFX5100 switch) if all the MAC addresses learned from that VTEP age out. The address for the remote VTEP expires the configured number of seconds after the last learned MAC address expires.

```
[edit]
user@switch# set vlans VLAN1 vxlan unreachable-vtep-aging-timer 600
```

(Optional) Configure the switch to de-encapsulate and accept original VLAN tags in VXLAN packets. By default, a preserved VLAN tag is dropped when the packet is de-encapsulated.

```
[edit]
user@switch# set protocols l2-learning decapsulate-accept-inner-vlan
```

11. Configure the interface that connects to the Layer 3 network.

```
[edit]
user@switch# set interfaces xe-0/0/0 unit 0 family inet address 10.2.2.100/24
```

For switch QFX5100-96S 2, use address **10.2.2.200.**

12. Configure the server-facing interface to support multiple VLANs.

```
[edit]
user@switch# set interfaces xe-0/0/1 unit 0 family ethernet-switching interface-mode
trunk
```


Copyright © 2018, Juniper Networks, Inc.

```
[edit]
user@switch# set interfaces xe-0/0/1 unit 0 family ethernet-switching vlan members all
```

NOTE: Because this example shows only one VLAN, this step is not required for the example. In a real-world configuration, however, it would be required in order to support multiple VMs connected to multiple VLANs. In this case you would also need to configure additional VLAN to VXLAN mappings.

13. Enable OSPF on all interfaces that are mapped to area 0.0.0.0..

```
[edit]
user@switch# set protocols ospf enable
[edit]
user@switch# set protocols ospf area 0.0.0.0 interface em0.0 disable
[edit]
user@switch# set protocols ospf area 0.0.0.0 interface all
```

Results

From configuration mode, confirm your configuration by entering the following commands on QFX5100-96S 1. If the output does not display the intended configuration, repeat the instructions in this example to correct the configuration.

user@switch# show switch-options

```
vtep-source-interface lo0.0;
```

user@switch# show vlans

```
VLAN1 {
   vlan-id 100;
   vxlan {
      vni 100;
      multicast-group 233.252.0.2;
      encapsulate-inner-vlan;
   }
}
```

user@switch# show interfaces

```
xe-0/0/0 {
   unit 0 {
      family inet {
         address 10.2.2.100/24;
      }
   }
}
```

```
xe-0/0/1 {
   unit 0 {
      family ethernet-switching {
         interface-mode trunk;
         vlan {
            members all;
         }
      }
   }
}
lo0 {
   unit 0 {
      family inet {
         address 10.1.1.1/32;
      }
   }
}
```

user@switch# show protocols pim

```
rp {
   static {
      address 10.2.2.2;
   }
}
interface xe-0/0/0.0
```

Verification

Confirm that the configuration is working properly.

- Verifying VXLAN Reachability on page 80
- Verifying That the Local VTEP Is Configured Correctly on page 81
- Verifying MAC Learning from the Remote VTEP on page 81
- Monitor the Remote Interface on page 82
- Verifying OSPF Neighbor on page 83

Verifying VXLAN Reachability

Purpose On QFX5100-96S 1, verify that there is connectivity with the remote VTEP (QFX5100-96S 2).

Copyright © 2018, Juniper Networks, Inc.

Action **user@switch> show ethernet-switching vxlan-tunnel-end-point remote**

```
Logical System Name       Id  SVTEP-IP         IFL   L3-Idx
<default>                 0   10.1.1.2     lo0.0    0
RVTEP-IP         IFL-Idx   NH-Id
10.1.1.2         559       1728
VNID             MC-Group-IP
100              233.252.0.2
```

Meaning The VTEP on QFX5100-96S 2 is reachable because its IP address (the address assigned to the loopback interface) appears in the output. The output also shows that the VXLAN (VNI 100) and corresponding multicast group are configured correctly on the remote VTEP.

Verifying That the Local VTEP Is Configured Correctly

Purpose On QFX5100-96S 1, verify that the tunnel endpoint is correct.

Action **user@switch> show ethernet-switching vxlan-tunnel-end-point source**

```
Logical System Name       Id  SVTEP-IP         IFL   L3-Idx
<default>                 0   10.1.1.1     lo0.0    0
L2-RTT                  Bridge Domain              VNID     MC-Group-IP
default-switch          VLAN1+100                  100      233.252.0.2
```

Meaning The VTEP on QFX5100-96S 1 shows the correct tunnel source IP address (assigned to the loopback interface), VLAN, and multicast group for the VXLAN.

Verifying MAC Learning from the Remote VTEP

Purpose On QFX5100-96S 1, verify that it is learning MAC addresses from the remote VTEP.

Action **user@switch> show ethernet-switching table**

```
MAC flags (S - static MAC, D - dynamic MAC, L - locally learned, P - Persistent
static
           SE - statistics enabled, NM - non configured MAC, R - remote PE MAC)
Ethernet switching table : 2 entries, 2 learned
Routing instance : default-switch
    Vlan                MAC                 MAC         Age    Logical
    name                address             flags              interface
    VLAN1                00:00:00:ff:ff:ff   D             -   vtep.12345
    VLAN1                00:10:94:00:00:02   D         -       xe-0/0/0.0
```

Meaning The output shows the MAC addresses learned from the remote VTEP (in addition to those learned on the normal Layer 2 interfaces). It also shows the logical name of the remote VTEP interface (**vtep.12345** in the above output).

Monitor the Remote Interface

Purpose On QFX5100-96S 1, monitor traffic details for the remote VTEP interface.

Action **user@switch> show interface vtep.12345 detail**

```
M    Flags: Up SNMP-Traps Encapsulation: ENET2
    VXLAN Endpoint Type: Remote, VXLAN Endpoint Address: 10.1.1.2, L2 Routing
Instance: default-switch, L3 Routing Instance: default
    Traffic statistics:
     Input  bytes  :         228851738624
     Output bytes  :                    0
     Input  packets:            714162415
     Output packets:                    0
    Local statistics:
     Input  bytes  :                    0
     Output bytes  :                    0
     Input  packets:                    0
     Output packets:                    0
    Transit statistics:
     Input  bytes  :         228851738624                   0 bps
     Output bytes  :                    0                   0 bps
     Input  packets:            714162415                   0 pps
     Output packets:                    0                   0 pps
    Protocol eth-switch, MTU: 1600, Generation: 277, Route table: 5
```

Meaning The output shows traffic details for the remote VTEP interface. To get this information, you must supply the logical name of the remote VTEP interface (vtep.12345 in the above output), which you can learn by using the **show ethernet-switching table** command.

 Copyright © 2018, Juniper Networks, Inc.

Verifying OSPF Neighbor

Purpose On QFX5100-96S 1, verify that the remote VTEP (QFX5100-96S 2) has established itself as an OSPF neighbor.

Action **user@switch> show ospf neighbor**

```
Address          Interface              State     ID               Pri  Dead
10.2.2.200       xe-0/0/0.0             Full      10.2.3.2          128    38
```

Meaning The output shows that interface xe-0/0/0.0 on QFX5100-96S 2 is in the **Full** state, which means that QFX5100-96S 2 is a fully adjacent neighbor. The **Full** state also means that Layer 3 connectivity exists between QFX5100-96S 1 and QFX5100-96S 2.

See Also
- Understanding VXLANs on page 5

Related Documentation
- Understanding VXLANs on page 5
- VXLAN Constraints on QFX Series and EX4600 Switches on page 12

Verifying That a Local VXLAN VTEP Is Configured Correctly

Purpose Verify that a local VTEP is correct.

Action **user@switch> show ethernet-switching vxlan-tunnel-end-point source**

```
Logical System Name       Id  SVTEP-IP         IFL   L3-Idx
<default>                  0   10.1.1.1     lo0.0    0
L2-RTT                   Bridge Domain              VNID     MC-Group-IP
default-switch           VLAN1+100                  100      233.252.0.1
```

Meaning The output shows the correct tunnel source IP address (loopback address), VLAN, and multicast group for the VXLAN.

Related Documentation
- Understanding VXLANs on page 5

Verifying MAC Learning from a Remote VTEP

Purpose Verify that a local VTEP is learning MAC addresses from a remote VTEP.

Action

user@switch> show ethernet-switching table

```
MAC flags (S - static MAC, D - dynamic MAC, L - locally learned, P - Persistent
static
           SE - statistics enabled, NM - non configured MAC, R - remote PE MAC)
Ethernet switching table : 2 entries, 2 learned
Routing instance : default-switch
    Vlan                MAC                 MAC         Age    Logical
    name                address             flags              interface
    VLAN1                00:00:00:ff:ff:ff   D             -   vtep.12345
    VLAN1                00:10:94:00:00:02   D         -       xe-0/0/0.0
```

Meaning

The output shows the MAC addresses learned from the remote VTEP (in addition to those learned on the normal Layer 2 interfaces). It also shows the logical name of the remote VTEP interface (**vtep.12345** in the above output).

Related Documentation

- Understanding VXLANs on page 5
- Manually Configuring VXLANs on QFX Series and EX4600 Switches on page 71
- Examples: Manually Configuring VXLANs on QFX Series and EX4600 Switches on page 73

Copyright © 2018, Juniper Networks, Inc.

PART 3

Troubleshooting

- Troubleshooting Tasks on page 87

Copyright © 2018, Juniper Networks, Inc.

CHAPTER 4

Troubleshooting Tasks

- Troubleshooting a Nonoperational Logical Switch and Corresponding Junos OS OVSDB-Managed VXLAN on page 87
- Verifying VXLAN Reachability on page 89
- Monitoring a Remote VTEP Interface on page 90
- Example: Troubleshooting a VXLAN Overlay Network By Using Overlay Ping and Traceroute on QFX Series Switches on page 91

Troubleshooting a Nonoperational Logical Switch and Corresponding Junos OS OVSDB-Managed VXLAN

Problem

Description: The Flags field in the **show ovsdb logical-switch** operational mode command output is one of the following:

- **Created by Controller**
- **Created by L2ALD**
- **Tunnel key mismatch**

Cause

- If the Flags field displays **Created by Controller**, a logical switch is configured in the NSX environment or a virtual network is configured in the Contrail environment. However, an equivalent VXLAN is not configured or is improperly configured on the Juniper Networks device.
- If the Flags field displays **Created by L2ALD**, a VXLAN is configured on the Juniper Networks device. However, an equivalent logical switch is not configured in the NSX environment or an equivalent virtual network is not configured in the Contrail environment.
- If the Flags field displays **Tunnel key mismatch**, the VXLAN network identifier (VNI) specified in the logical switch configuration or the VXLAN identifier specified in the virtual network configuration do not match the VNI in the equivalent VXLAN configuration.

Solution

If the Flags field displays **Created by Controller**, take the following action:

- On a QFX Series switch, verify that the **set switch-options ovsdb-managed** configuration command was issued in the Junos OS CLI. Issuing this command and committing the configuration enable the Juniper Networks device to dynamically create OVSDB-managed VXLANs.

  Another possible cause is that the L2ALD daemon has become nonfunctional. If this is the case, wait for a few seconds, reissue the **show ovsdb logical-switch** operational mode command, and recheck the setting of the Flags field.

  Another possible cause is that the Juniper Networks device dynamically configured the VXLAN and its associated logical interface, but there is an error in the configuration of these entities themselves or in an entity that was committed in the same transaction. If there is an issue with one or more of the configurations in a transaction, all configurations in the transaction, even the ones that are correctly configured, remain uncommitted and in a queue until you troubleshoot and resolve the configuration issues. As a result, the Juniper Networks device was unable to commit all configurations in the transaction. Starting with Junos OS Release 14.1X53-D26 for QFX5100 switches, Junos OS Release 15.1X53-D210 for QFX5110 and QFX5200 switches, and 18.1R1 for QFX5210 switches, you can enter the **show ovsdb commit failures** operational mode command to determine which configurations in a transaction are erroneous. After resolving the errors, enter the **clear ovsdb commit failures** command to remove the transaction from the queue and then retry committing all configurations in the transaction. Issues that can cause commitment errors include but are not limited to the detection of the same VXLAN name or VXLAN network identifier (VNI) in a dynamically configured VXLAN and in a VXLAN that was previously configured using the Junos OS CLI.

- On all other Juniper Networks devices that support VXLAN and OVSDB, determine whether a VXLAN equivalent to the logical switch configuration or virtual network configuration exists on the device. If the VXLAN is not configured, configure it using the procedure in *Configuring OVSDB-Managed VXLANs*. If a VXLAN is configured, check the VXLAN name to make sure that it is the same as the universally unique identifier (UUID) of the logical switch (NSX) or virtual network (Contrail) configuration. Also, check the VNI to make sure that the value is the same as the value in the logical switch (NSX) or virtual network (Contrail) configuration.

If the Flags field displays **Created by L2ALD**, take the following action:

- On a QFX Series switch, two issues exist. First, despite the fact that the Juniper Networks device dynamically creates OVSDB-managed VXLANs, this VXLAN was configured by using the Junos OS CLI. Second, a corresponding logical switch (NSX) or virtual network (Contrail) was not configured. To resolve both issues, configure a logical switch in the NSX environment or a virtual network in the Contrail environment. After the software-defined networking (SDN) controller pushes relevant logical switch or virtual network information to the Juniper Networks device, the device dynamically creates a corresponding VXLAN and deletes the VXLAN configured using the Junos OS CLI.

- On all other Juniper Networks devices that support VXLAN and OVSDB, determine whether an equivalent logical switch is configured in the NSX environment or a virtual network is configured in the Contrail environment. If a logical switch or virtual network is not configured, configure one, keeping in mind that a UUID is automatically generated

 Copyright © 2018, Juniper Networks, Inc.

for the logical switch or virtual network and that this UUID must be used as the name of the VXLAN. That is, the VXLAN name must be reconfigured with the logical switch or virtual network UUID.

Another possibility is that the logical switch or virtual network configuration might exist, but the UUID of the entity might not match the VXLAN name. In the NSX or Contrail environment, check for a logical switch or virtual network, respectively, that has the same configuration as the VXLAN but has a different UUID.

If the Flags field displays **Tunnel key mismatch**, take the following action:

- For a QFX Series switch, check the configuration of the VNI in the NSX environment or the VXLAN identifier in the Contrail environment to see whether it was changed after the Juniper Networks device dynamically created the equivalent VXLAN. If it was changed, update the VNI on the QFX Series switch using the Junos OS CLI.
- On all other Juniper Networks devices that support VXLAN and OVSDB, check the value of the VNI in the NSX environment or the VXLAN identifier in the Contrail environment and the Junos OS CLI. Change the incorrect value.

Release History Table

Release	Description
14.1X53-D26	Starting with Junos OS Release 14.1X53-D26 for QFX5100 switches, Junos OS Release 15.1X53-D210 for QFX5110 and QFX5200 switches, and 18.1R1 for QFX5210 switches, you can enter the **show ovsdb commit failures** operational mode command to determine which configurations in a transaction are erroneous.

Related Documentation

- Understanding Dynamically Configured VXLANs in an OVSDB Environment on page 39
- *Understanding How to Manually Configure OVSDB-Managed VXLANs*
- **show ovsdb logical-switch on page 135**
- **show ovsdb commit failures on page 128**
- **clear ovsdb commit failures on page 126**

Verifying VXLAN Reachability

Purpose On the local VTEP, verify that there is connectivity with the remote VTEP.

Action **user@switch> show ethernet-switching vxlan-tunnel-end-point remote**

```
Logical System Name       Id  SVTEP-IP         IFL   L3-Idx
<default>                 0   10.1.1.2     lo0.0    0
RVTEP-IP         IFL-Idx   NH-Id
10.1.1.2         559       1728
VNID             MC-Group-IP
100              233.252.0.1
```

Meaning The remote VTEP is reachable because its IP address appears in the output. The output also shows that the VXLAN (VNI 100) and corresponding multicast group are configured correctly on the remote VTEP.

Related Documentation

- Understanding VXLANs on page 5
- Manually Configuring VXLANs on QFX Series and EX4600 Switches on page 71
- Examples: Manually Configuring VXLANs on QFX Series and EX4600 Switches on page 73

Monitoring a Remote VTEP Interface

Purpose Monitor traffic details for a remote VTEP interface.

Action **user@switch> show interface *logical-name* detail**

```
M    Flags: Up SNMP-Traps Encapsulation: ENET2
    VXLAN Endpoint Type: Remote, VXLAN Endpoint Address: 10.1.1.2, L2 Routing
Instance: default-switch, L3 Routing Instance: default
    Traffic statistics:
     Input  bytes  :         228851738624
     Output bytes  :                    0
     Input  packets:            714162415
     Output packets:                    0
    Local statistics:
     Input  bytes  :                    0
     Output bytes  :                    0
     Input  packets:                    0
     Output packets:                    0
    Transit statistics:
     Input  bytes  :         228851738624                    0 bps
     Output bytes  :                    0                    0 bps
     Input  packets:            714162415                    0 pps
     Output packets:                    0                    0 pps
    Protocol eth-switch, MTU: 1600, Generation: 277, Route table: 5
```

Meaning The output shows traffic details for the remote VTEP interface. To get this information, you must supply the logical name of the remote VTEP interface (vtep.12345 in the above output), which you can learn by using the **show ethernet-switching table** command.

 Copyright © 2018, Juniper Networks, Inc.

Related Documentation

- Understanding VXLANs on page 5
- Manually Configuring VXLANs on QFX Series and EX4600 Switches on page 71
- Examples: Manually Configuring VXLANs on QFX Series and EX4600 Switches on page 73

Example: Troubleshooting a VXLAN Overlay Network By Using Overlay Ping and Traceroute on QFX Series Switches

In a Virtual Extensible LAN (VXLAN) overlay network, the existing **ping** and **traceroute** commands can verify the basic connectivity between two Juniper Networks devices that function as virtual tunnel endpoints (VTEPs) in the underlying physical network. However, in between the two VTEPs, there could be multiple routes through intermediary devices to the same destinations, and the ping and traceroute packets might successfully reach their destinations, while a connectivity issue exists in another route along which the data packets are typically forwarded.

With the introduction of the **overlay** parameter and other options in Junos OS Release 14.1X53-D30 for QFX5100 switches, you can use the **ping** and **traceroute** commands to troubleshoot a VXLAN overlay network.

For ping and traceroute mechanisms to work in a VXLAN overlay network, the ping and traceroute packets, also referred to as Operations, Administration, and Management (OAM) packets, must be encapsulated with the same VXLAN UDP headers (outer headers) as the data packets forwarded over the VXLAN segment with possible connectivity issues. If any connectivity issues arise, the overlay OAM packet would experience the same issues as the data packet.

This example shows how to use overlay ping and traceroute on a VTEP to verify the following in a VXLAN overlay network:

- Scenario 1—Verify that a particular VXLAN is configured on another VTEP.
- Scenario 2—Verify that the MAC address of a particular endpoint is associated with a VXLAN on another VTEP.
- Scenario 3—Verify that no issues exist in a particular data flow between sending and receiving endpoints.

NOTE: When issuing the **ping overlay** and **traceroute overlay** commands, the source VTEP on which you issue the command and the destination VTEP that receives the ping or traceroute packet must be Juniper Networks devices that support overlay ping and traceroute.

Requirements

This example uses the following hardware and software components:

- Three physical (bare-metal) servers on which applications directly run.

- Two QFX5100 switches running Junos OS Release 14.1X53-D30 or later software. These switches function as VTEPs.
- Two Layer 3 routers, which can be Juniper Networks routers or routers provided by another vendor.

Before issuing the **ping overlay** and **traceroute overlay** commands, gather the information needed for each parameter—for example, IP addresses or MAC addresses—used for a particular scenario. See Table 17 on page 93 to determine which parameters are used for each scenario.

Overview and Topology

The VXLAN overlay network topology shown in Figure 10 on page 92 includes physical servers A, B, and C on which applications directly run. The applications on physical servers A and B need to communicate with the applications on physical server C. These servers are on the same subnet, so the communication between the applications occurs at the Layer 2 level, and VXLAN encapsulation or tunnels are used to transport their data packets over a Layer 3 network.

Figure 10: Using Overlay Ping and Traceroute to Troubleshoot a VXLAN Overlay Network

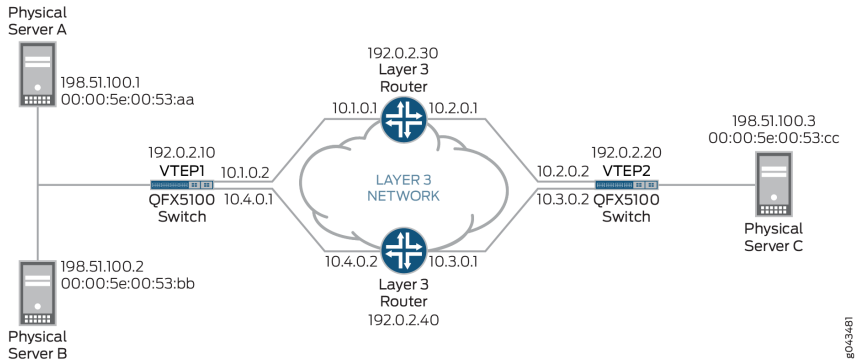

In this topology, there are two QFX5100 switches that function as VTEPs. VTEP1 initiates and terminates VXLAN tunnels for physical servers A and B, and VTEP2 does the same for physical server C. VTEP1 and VTEP2 are in VXLAN 100.

A data packet sent from physical server A is typically routed to the Layer 3 router with the IP address of 192.0.2.30 to reach physical server C.

In this VXLAN overlay network topology, a communication issue arises between physical servers A and C. To troubleshoot the issue with this data flow, you can initiate the **ping overlay** and **traceroute overlay** commands on VTEP1 (the source VTEP or **tunnel-src**) and specify that VTEP2 is the destination VTEP or **tunnel-dst**.

The **ping overlay** and **traceroute overlay** commands include several parameters. Table 17 on page 93 explains the purpose and provides a value for each of the parameters used in scenarios 1, 2, and 3.

Table 17 on page 93 does not include all available **ping overlay** and **traceroute overlay** parameters. This example uses the default values of these omitted parameters.

 Copyright © 2018, Juniper Networks, Inc.

Table 17: Ping and Traceroute Overlay Parameter Values For Scenarios 1, 2, and 3

ping overlay and traceroute overlay Parameters	Description	Scenario to Which Parameter Applies	Value
tunnel-type	Identifies type of tunnel that you are troubleshooting.	All	vxlan
vni	VXLAN network identifier (VNI) of VXLAN used in this example.	All	100
tunnel-src	IP address of VTEP1, on which you initiate overlay ping or traceroute.	All	192.0.2.10
tunnel-dst	IP address of VTEP2, which receives the overlay ping or traceroute packets.	All	192.0.2.20
mac	MAC address of physical server C, which is the destination endpoint.	Scenarios 2 and 3 only	00:00:5E:00:53:cc
count	Number of overlay ping requests that VTEP1 sends. NOTE: The count parameter does not apply to overlay traceroute.	All	5
hash-source-mac	MAC address of physical server A, which is the source endpoint.	Scenario 3 only	00:00:5E:00:53:aa
hash-destination-mac	MAC address of physical server C, which is the destination endpoint. NOTE: When specifying this parameter for scenario 3, the MAC address must be the same MAC address as specified for the **mac** parameter.	Scenario 3 only	00:00:5E:00:53:cc
hash-source-address	IP address of physical server A.	Scenario 3 only	198.51.100.1
hash-destination-address	IP address of physical server C.	Scenario 3 only	198.51.100.3

Copyright © 2018, Juniper Networks, Inc.

Table 17: Ping and Traceroute Overlay Parameter Values For Scenarios 1, 2, and 3 (continued)

ping overlay and traceroute overlay Parameters	Description	Scenario to Which Parameter Applies	Value
hash-vlan	VLAN ID of source endpoint. NOTE: If the source endpoint is not a member of a VLAN, you do not need to use this parameter.	Scenario 3 only	150
hash-input-interface	VTEP1 interface on which data flow originates.	Scenario 3 only	xe-0/0/2
hash-protocol	A value for the protocol used in the data flow.	Scenario 3 only	17
hash-source-port	A value for the outer TCP/UDP source port.	Scenario 3 only	4456
hash-destination-port	A value for the outer UDP destination port.	Scenario 3 only	4540

Table 17 on page 93 includes several hash parameters, which are used for scenario 3. For each of these parameters, you must specify a value associated with the data flow that you are troubleshooting. Based on the values that you specify, the system calculates a VXLAN UDP header source port hash, which is included in the VXLAN UDP header of the overlay ping and traceroute packets. Including the calculated hash in the VXLAN UDP header enables the overlay ping and traceroute packets to emulate data packets in the flow that you are troubleshooting.

BEST PRACTICE: When using the hash parameters, we recommend that you specify a value for each parameter. The exception to this guideline is the hash-vlan parameter, which you do not have to use if the source endpoint is not a member of a VLAN. This practice ensures that the overlay ping and traceroute processes are successful and that the output for each command is accurate. If you do not specify a value for one or more of the hash parameters, the system sends an OAM request that might include incorrect hash values and generates a warning message.

Verification

This section includes the following verification tasks:

- Scenario 1: Verifying That VXLAN 100 Is Configured on VTEP2 on page 95
- Scenario 2: Verifying That the MAC Address of the Destination Endpoint Is on VTEP2 on page 97
- Scenario 3: Verifying a Data Flow on page 100

Copyright © 2018, Juniper Networks, Inc.

Scenario 1: Verifying That VXLAN 100 Is Configured on VTEP2

Purpose Verify that a VXLAN with the VNI of 100 is configured on VTEP2. You can use either overlay ping or traceroute to perform this verification.

Overlay Ping

Action

On VTEP1, initiate an overlay ping:

`user@switch>` **ping overlay tunnel-type vxlan vni 100 tunnel-src 192.0.2.10 tunnel-dst 192.0.2.20 count 5**

```
ping-overlay protocol vxlan

        vni 100
        tunnel src ip 192.0.2.10
        tunnel dst ip 192.0.2.20
        mac address 00:00:00:00:00:00
        count 5
        ttl 255

   WARNING: following hash-parameters are missing -
                hash computation may not succeed

                end-host smac
                end-host dmac
                end-host src ip
                end-host dst ip
                end-host vlan
                end-host input interface
                end-host protocol
                end-host l4-src-port
                end-host l4-dst-port

Request for seq 1, to 192.0.2.20, at 09-24 22:03:16 PDT.033 msecs

Response for seq 1, from 192.0.2.20, at 09-24 22:03:16 PDT.036 msecs, rtt 10 msecs


  Overlay-segment  not present at RVTEP 192.0.2.20


Request for seq 2, to 192.0.2.20, at 09-24 22:03:16 PDT.044 msecs

Response for seq 2, from 192.0.2.20, at 09-24 22:03:16 PDT.046 msecs, rtt 10 msecs


  Overlay-segment  not present at RVTEP 192.0.2.20


Request for seq 3, to 192.0.2.20, at 09-24 22:03:16 PDT.054 msecs

Response for seq 3, from 192.0.2.20, at 09-24 22:03:16 PDT.057 msecs, rtt 10 msecs


  Overlay-segment  not present at RVTEP 192.0.2.20
```

Copyright © 2018, Juniper Networks, Inc.

```
Request for seq 4, to 192.0.2.20, at 09-24 22:03:16 PDT.065 msecs

Response for seq 4, from 192.0.2.20, at 09-24 22:03:16 PDT.069 msecs, rtt 10 msecs


  Overlay-segment  not present at RVTEP 192.0.2.20

Request for seq 5, to 192.0.2.20, at 09-24 22:03:16 PDT.076 msecs

Response for seq 5, from 192.0.2.20, at 09-24 22:03:16 PDT.079 msecs, rtt 10 msecs


  Overlay-segment  not present at RVTEP 192.0.2.20
```

Overlay Traceroute

On VTEP1, initiate an overlay traceroute:

user@switch> **traceroute overlay tunnel-type vxlan vni 100 tunnel-src 192.0.2.10 tunnel-dst 192.0.2.20**

```
traceroute-overlay protocol vxlan

        vni 100
        tunnel src ip 192.0.2.10
        tunnel dst ip 192.0.2.20
        mac address 00:00:00:00:00:00
        ttl 255

   WARNING: following hash-parameters are missing -
                hash computation may not succeed

                end-host smac
                end-host dmac
                end-host src ip
                end-host dst ip
                end-host vlan
                end-host input interface
                end-host protocol
                end-host l4-src-port
                end-host l4-dst-port

ttl  Address    Sender Timestamp               Receiver Timestamp
Response Time
  1   10.1.0.1   09-25 00:51:10 PDT.599 msecs            *
10 msecs
  2   192.0.2.20   09-25 00:51:10 PDT.621 msecs   09-25 00:51:10 PDT.635 msecs
 21 msecs

  Overlay-segment not present at RVTEP 192.0.2.20
```

Meaning The sample overlay ping output indicates the following:

- VTEP1 sent five ping requests to VTEP2, and VTEP2 responded to each request.
- VTEP2 indicated that the VNI of 100 is not configured (**Overlay-segment not present at RVTEP 192.0.2.20**) and included this information in its response to VTEP1.

 Copyright © 2018, Juniper Networks, Inc.

The sample overlay traceroute output indicates the following:

- Upon receiving an overlay traceroute packet with a time-to-live (TTL) value of 1 hop, the Layer 3 router responds to VTEP1.
- Upon receiving an overlay traceroute packet with a TTL value of 2 hops, VTEP2 responds to VTEP1.
- VTEP2 indicated that the VNI of 100 is not configured (**Overlay-segment not present at RVTEP 192.0.2.20**) and included this information in its response to VTEP1.

NOTE: The asterisk (*) in the Receiver Timestamp column of the overlay traceroute output indicates that the Layer 3 router that received the overlay traceroute packet is not a Juniper Networks device or is a Juniper Networks device that does not support overlay traceroute.

Given that the output of both overlay ping and traceroute indicates that VXLAN 100 is not present, check for this configuration on VTEP2. If you must configure a VNI of 100 on VTEP2, use the **vni** configuration statement at the **[edit vlans *vlan-id* vxlan]** hierarchy level, and reissue the **ping overlay** or **traceroute overlay** command to verify that VXLAN 100 is now recognized.

Scenario 2: Verifying That the MAC Address of the Destination Endpoint Is on VTEP2

Purpose Verify that the MAC address (00:00:5E:00:53:cc) of physical server C, which is the destination endpoint, is in the forwarding table of VTEP2. You can use either overlay ping or traceroute to perform this verification.

Overlay Ping

Action

On VTEP1, initiate an overlay ping:

`user@switch>` **ping overlay tunnel-type vxlan vni 100 tunnel-src 192.0.2.10 tunnel-dst 192.0.2.20 mac 00:00:5E:00:53:cc count 5**

```
ping-overlay protocol vxlan

        vni 100
        tunnel src ip 192.0.2.10
        tunnel dst ip 192.0.2.20
        mac address 00:00:5E:00:53:cc
        count 5
        ttl 255

   WARNING: following hash-parameters are missing -
                hash computation may not succeed

                end-host smac
                end-host dmac
                end-host src ip
```

```
                end-host dst ip
                end-host vlan
                end-host input interface
                end-host protocol
                end-host l4-src-port
                end-host l4-dst-port

Request for seq 1, to 192.0.2.20, at 09-24 23:53:54 PDT.089 msecs

Response for seq 1, from 192.0.2.20, at 09-24 23:53:54 PDT.089 msecs, rtt 6 msecs


  Overlay-segment present at RVTEP 192.0.2.20

      End-System Not Present


Request for seq 2, to 192.0.2.20, at 09-24 23:53:54 PDT.096 msecs

Response for seq 2, from 192.0.2.20, at 09-24 23:53:54 PDT.100 msecs, rtt 10 msecs


  Overlay-segment present at RVTEP 192.0.2.20

      End-System Not Present


Request for seq 3, to 192.0.2.20, at 09-24 23:53:54 PDT.107 msecs

Response for seq 3, from 192.0.2.20, at 09-24 23:53:54 PDT.111 msecs, rtt 10 msecs


  Overlay-segment present at RVTEP 192.0.2.20

      End-System Not Present

Request for seq 4, to 192.0.2.20, at 09-24 23:53:54 PDT.118 msecs

Response for seq 4, from 192.0.2.20, at 09-24 23:53:54 PDT.122 msecs, rtt 11 msecs


  Overlay-segment present at RVTEP 192.0.2.20

      End-System Not Present


Request for seq 5, to 192.0.2.20, at 09-24 23:53:54 PDT.129 msecs

Response for seq 5, from 192.0.2.20, at 09-24 23:53:54 PDT.133 msecs, rtt 10 msecs


  Overlay-segment present at RVTEP 192.0.2.20

      End-System Not Present
```

Overlay Traceroute

On VTEP1, initiate an overlay traceroute:

Copyright © 2018, Juniper Networks, Inc.

user@switch> **traceroute overlay tunnel-type vxlan vni 100 tunnel-src 192.0.2.10 tunnel-dst 192.0.2.20 mac 00:00:5E:00:53:cc**

```
traceroute-overlay protocol vxlan

        vni 100
        tunnel src ip 192.0.2.10
        tunnel dst ip 192.0.2.20
        mac address 00:00:5E:00:53:cc
        ttl 255


   WARNING: following hash-parameters are missing -
                hash computation may not succeed

                end-host smac
                end-host dmac
                end-host src ip
                end-host dst ip
                end-host vlan
                end-host input interface
                end-host protocol
                end-host l4-src-port
                end-host l4-dst-port

ttl  Address    Sender Timestamp               Receiver Timestamp
Response Time
  1   10.1.0.1   09-25 00:56:17 PDT.663 msecs            *
10 msecs
  2   192.0.2.20   09-25 00:56:17 PDT.684 msecs   09-25 00:56:17 PDT.689 msecs
 11 msecs

  Overlay-segment present at RVTEP 192.0.2.20

      End-System Not Present
```

Meaning The sample overlay ping output indicates the following:

- VTEP1 sent five ping requests to VTEP2, and VTEP2 responded to each request.
- VTEP2 verified that the VNI of 100 is configured (**Overlay-segment present at RVTEP 192.0.2.20**) but that the MAC address of physical server C is not in the forwarding table (**End-System Not Present**). VTEP2 included this information in its response to VTEP1.

The sample overlay traceroute output indicates the following:

- Upon receiving an overlay traceroute packet with a TTL value of 1 hop, the Layer 3 router responds to VTEP1.
- Upon receiving an overlay traceroute packet with a TTL value of 2 hops, VTEP2 responds to VTEP1.
- VTEP2 verified that the VNI of 100 is configured (**Overlay-segment present at RVTEP 192.0.2.20**) but that the MAC address of physical server C is not in the forwarding table (**End-System Not Present**). VTEP2 included this information in its response to VTEP1.

NOTE: The asterisk (*) in the Receiver Timestamp column of the overlay traceroute output indicates that the Layer 3 router that received the overlay traceroute packet is not a Juniper Networks device or is a Juniper Networks device that does not support overlay traceroute.

Given that the output of both overlay ping and traceroute indicates that the MAC address of physical server C is not known by VTEP2, you must further investigate to determine why this MAC address is not in the forwarding table of VTEP2.

Scenario 3: Verifying a Data Flow

Purpose Verify that there are no issues that might impede the flow of data from physical server A to physical server C. The networking devices that support this flow include VTEP1, the Layer 3 router with the IP address of 192.0.2.30, and VTEP2 (see Figure 10 on page 92).

Initially, use overlay ping, and if the overlay ping results indicate an issue, then use overlay traceroute to determine in which segment of the path the issue exists.

With both overlay ping and traceroute, use the hash parameters to specify information about the devices in this data flow so that the system can calculate a VXLAN UDP header source port hash, which is included in the VXLAN UDP header of the overlay ping and traceroute packets. With the calculated hash included in the VXLAN UDP header, the overlay ping and traceroute packets can emulate data packets in this flow, which should produce more accurate ping and traceroute results.

BEST PRACTICE: When using the hash parameters, we recommend specifying a value for each parameter. The exception to this guideline is the hash-vlan parameter, which you do not have to use if the source endpoint is not a member of a VLAN. This practice ensures that the overlay ping and traceroute processes are successful and that the output for each command is accurate. If you do not specify a value for one or more of the hash parameters, the system sends an OAM request that might include incorrect hash values and generates a warning message.

Overlay Ping

Action

On VTEP1, initiate an overlay ping:

```
user@switch> ping overlay tunnel-type vxlan vni 100 tunnel-src 192.0.2.10 tunnel-dst 192.0.2.20
mac 00:00:5E:00:53:cc count 5 hash-source-mac 00:00:5E:00:53:aa hash-destination-mac
00:00:5E:00:53:cc hash-source-address 198.51.100.1 hash-destination-address 198.51.100.3
hash-vlan 150 hash-input-interface xe-0/0/2 hash-protocol 17 hash-source-port 4456
hash-destination-port 4540
```


Copyright © 2018, Juniper Networks, Inc.

```
ping-overlay protocol vxlan

        vni 100
        tunnel src ip 192.0.2.10
        tunnel dst ip 192.0.2.20
        mac address 00:00:5E:00:53:cc
        count 5
        ttl 255

        hash-parameters:
                input-ifd-idx 653
                end-host smac 00:00:5E:00:53:aa
                end-host dmac 00:00:5E:00:53:cc
                end-host src ip 198.51.100.1
                end-host dst ip 198.51.100.3
                end-host protocol 17
                end-host l4-src-port 4456
                end-host l4-dst-port 4540
                end-host vlan 150

Request for seq 1, to 192.0.2.20, at 09-24 19:15:33 PDT.352 msecs

Request for seq 2, to 192.0.2.20, at 09-24 19:15:33 PDT.363 msecs

Request for seq 3, to 192.0.2.20, at 09-24 19:15:33 PDT.374 msecs

Request for seq 4, to 192.0.2.20, at 09-24 19:15:33 PDT.385 msecs

Request for seq 5, to 192.0.2.20, at 09-24 19:15:33 PDT.396 msecs
```

Overlay Traceroute

If needed, on VTEP1, initiate an overlay traceroute:

`user@switch>` **traceroute overlay tunnel-type vxlan vni 100 tunnel-src 192.0.2.10 tunnel-dst 192.0.2.20 mac 00:00:5E:00:53:cc hash-source-mac 00:00:5E:00:53:aa hash-destination-mac 00:00:5E:00:53:cc hash-source-address 198.51.100.1 hash-destination-address 198.51.100.3 hash-vlan 150 hash-input-interface xe-0/0/2 hash-protocol 17 hash-source-port 4456 hash-destination-port 4540**

```
traceroute-overlay protocol vxlan

        vni 100
        tunnel src ip 192.0.2.10
        tunnel dst ip 192.0.2.20
        mac address 00:00:5E:00:53:cc
        ttl 255

        hash-parameters:
                input-ifd-idx 653
                end-host smac 00:00:5E:00:53:aa
                end-host dmac 00:00:5E:00:53:cc
                end-host src ip 198.51.100.1
                end-host dst ip 198.51.100.3
                end-host protocol 17
                end-host l4-src-port 4456
                end-host l4-dst-port 4540
                end-host vlan 150

ttl  Address    Sender Timestamp               Receiver Timestamp
```

```
Response Time
  1   10.1.0.1   09-25 00:56:17 PDT.663 msecs            *
10 msecs
```

Meaning

The sample overlay ping output indicates that VTEP1 sent five ping requests to VTEP2, but VTEP2 did not respond to any of the requests. The lack of response from VTEP2 indicates that a connectivity issue exists along the path between VTEP1 and the Layer 3 router or the path between the Layer 3 router and VTEP2.

To further troubleshoot in which path the issue lies, overlay traceroute is used. The sample overlay traceroute output indicates the following:

- Upon receiving an overlay traceroute packet with a TTL value of 1 hop, the Layer 3 router responds to VTEP1, which indicates that the path between VTEP1 and the Layer 3 router is up.
- VTEP2 does not respond to the overlay traceroute packet, which indicates that the path between the Layer 3 router and VTEP2 might be down.

NOTE: The asterisk (*) in the Receiver Timestamp column of the overlay traceroute output indicates that the Layer 3 router that received the overlay traceroute packet is not a Juniper Networks device or is a Juniper Networks device that does not support overlay traceroute.

Given that the overlay traceroute output indicates that there is a connectivity issue between the Layer 3 router and VTEP2, you must further investigate this path segment to determine the source of the issue.

Related Documentation

- Understanding Overlay ping and traceroute Packet Support on page 23
- ping overlay on page 156
- traceroute overlay on page 201

Copyright © 2018, Juniper Networks, Inc.

PART 4

Configuration Statements and Operational Commands

- OVSDB Configuration Statements on page 105
- VXLAN Configuration Statements on page 117
- OVSDB Operational Commands on page 125
- VXLAN Operational Commands on page 155

Copyright © 2018, Juniper Networks, Inc.

CHAPTER 5

OVSDB Configuration Statements

- controller (OVSDB) on page 106
- inactivity-probe-duration on page 107
- interfaces (OVSDB) on page 108
- maximum-backoff-duration on page 109
- ovsdb on page 110
- ovsdb-managed on page 111
- port (OVSDB) on page 112
- protocol (OVSDB) on page 113
- traceoptions (OVSDB) on page 114

controller (OVSDB)

Syntax

```
controller ip-address {
  inactivity-probe-duration milliseconds;
  maximum-backoff-duration milliseconds;
  protocol protocol {
    port number;
  }
}
```

Hierarchy Level

[edit protocols ovsdb]

Release Information

Statement introduced in Junos OS Release 14.1R2.
Statement introduced in Junos OS Release 14.1X53-D10 for QFX Series switches.
Statement introduced in Junos OS Release 14.2 for EX Series switches.

Description

Configure a connection between a Juniper Networks device running the Open vSwitch Database (OVSDB) management protocol and a software-defined networking (SDN) controller. You can connect a Juniper Networks device to more than one SDN controller for redundancy.

In a VMware NSX environment, one cluster of NSX controllers typically includes three or five controllers. To implement the OVSDB management protocol on a Juniper Networks device, you must explicitly configure a connection to one NSX controller, using the Junos OS CLI. If the NSX controller to which you explicitly configure a connection is in a cluster, the controller pushes information about other controllers in the same cluster to the device, and the device establishes connections with the other controllers. However, you can also explicitly configure connections with the other controllers in the cluster, using the Junos OS CLI.

To implement the OVSDB management protocol on a Juniper Networks device in a Contrail environment, you must configure a connection to a Contrail controller, using the Junos OS CLI.

Connections to all SDN controllers are made on the management interface of the Juniper Networks device.

Options

ip-address—IPv4 address of the SDN controller.

The remaining statements are explained separately. See CLI Explorer.

Required Privilege Level

admin—To view this statement in the configuration.
admin-control—To add this statement to the configuration.

Related Documentation

- Setting Up OVSDB on Juniper Networks Devices That Support the Dynamic Configuration of VXLANs on page 38

Copyright © 2018, Juniper Networks, Inc.

- *Setting Up the OVSDB Protocol on Juniper Networks Devices that Support Manual Configuration of VXLANs*
- Understanding How to Set Up OVSDB Connections on a Juniper Networks Device on page 36

inactivity-probe-duration

Syntax

```
inactivity-probe-duration milliseconds;
```

Hierarchy Level

[edit protocols ovsdb controller]

Release Information

Statement introduced in Junos OS Release 14.1R2.
Statement introduced in Junos OS Release 14.1X53-D10 for QFX Series switches.
Statement introduced in Junos OS Release 14.2 for EX Series switches.

Description

Configure the maximum amount of time, in milliseconds, that the connection between a Juniper Networks device that supports the Open vSwitch Database (OVSDB) management protocol and a software-defined networking (SDN) controller can be inactive before an inactivity probe is sent.

Options

milliseconds—Number of milliseconds that the connection can be inactive before an inactivity probe is sent.

Range: 0 through 4,294,967,295

Default: 0. This value indicates that an inactivity probe is never sent.

Required Privilege Level

admin—To view this statement in the configuration.
admin-control—To add this statement to the configuration.

Related Documentation

- Understanding How to Set Up OVSDB Connections on a Juniper Networks Device on page 36

interfaces (OVSDB)

Syntax

interfaces *interface-name*;

Hierarchy Level

[edit protocols ovsdb]

Release Information

Statement introduced in Junos OS Release 14.1R2.
Statement introduced in Junos OS Release 14.1X53-D10 for QFX Series switches.
Statement introduced in Junos OS Release 14.2 for EX Series switches.

Description

Specify the physical interfaces on a Juniper Networks device that you want the Open vSwitch Database (OVSDB) protocol to manage. Typically, the only interfaces that need to be managed by OVSDB are interfaces that are connected to physical servers.

Options

interface-name—Name of the interface.

Required Privilege Level

admin—To view this statement in the configuration.
admin-control—To add this statement to the configuration.

Related Documentation

- *Setting Up the OVSDB Protocol on Juniper Networks Devices that Support Manual Configuration of VXLANs*
- Setting Up OVSDB on Juniper Networks Devices That Support the Dynamic Configuration of VXLANs on page 38

Copyright © 2018, Juniper Networks, Inc.

maximum-backoff-duration

Syntax

maximum-backoff-duration *milliseconds*;

Hierarchy Level

[edit protocols ovsdb controller]

Release Information

Statement introduced in Junos OS Release 14.1R2.
Statement introduced in Junos OS Release 14.1X53-D10 for QFX Series switches.
Statement introduced in Junos OS Release 14.2 for EX Series switches.

Description

Specify (in milliseconds) how long a Juniper Networks device that supports the Open vSwitch Database (OVSDB) management protocol waits before it tries again to connect with a software-defined networking (SDN) controller after a previous attempt has failed.

Options

milliseconds—Number of milliseconds a Juniper Networks device waits before it tries again to connect with an SDN controller.

Range: 1000 through 4,294,967,295

Default: 1000

Required Privilege Level

admin—To view this statement in the configuration.
admin-control—To add this statement to the configuration.

Related Documentation

- Understanding How to Set Up OVSDB Connections on a Juniper Networks Device on page 36

ovsdb

Syntax

```
ovsdb {
  controller ip-address {
    inactivity-probe-duration milliseconds;
    maximum-backoff-duration milliseconds;
    protocol protocol {
      port number;
    }
  }
  interfaces interface-name;
  traceoptions {
    file <filename> <files number> <match regular-expression> <no-world-readable |
      world-readable> <size size>;
    flag flag;
    no-remote-trace;
  }
}
```

Hierarchy Level

[edit protocols]

Release Information

Statement introduced in Junos OS Release 14.1R2.
Statement introduced in Junos OS Release 14.1X53-D10 for QFX Series switches.
Statement introduced in Junos OS Release 14.2 for EX Series switches.

Description

Configure support for the Open vSwitch Database (OVSDB) management protocol on a Juniper Networks device.

The remaining statements are explained separately. See CLI Explorer.

Default

The OVSDB management protocol is disabled on Juniper Networks devices.

Required Privilege Level

admin—To view this statement in the configuration.
admin-control—To add this statement to the configuration.

Related Documentation

- Understanding the OVSDB Protocol Running on Juniper Networks Devices on page 15

Copyright © 2018, Juniper Networks, Inc.

ovsdb-managed

Syntax

```
ovsdb-managed;
```

Hierarchy Level

```
[edit bridge-domains bridge-domain-name vxlan],
[edit routing-instances routing-instance-name bridge-domains bridge-domain-name vxlan],
[edit routing-instances routing-instance-name switch-options],
[edit routing-instances routing-instance-name vlans vlan-name vxlan],
[edit routing-instances routing-instance-name vxlan],
[edit switch-options],
[edit vlans vlan-name vxlan]
```

Release Information

Statement introduced in Junos OS Release 14.1R2.
Statement introduced in Junos OS Release 14.1X53-D10 for QFX Series switches.
Statement introduced in Junos OS Release 14.2 for EX Series switches.

Description

Disable a Juniper Networks device from learning about other Juniper Networks devices that function as hardware virtual tunnel endpoints (VTEPs) in a specified Virtual Extensible LAN (VXLAN) and the media access control (MAC) addresses learned by the hardware VTEPs. Instead, the Juniper Networks device uses the Open vSwitch Database (OVSDB) management protocol to learn about the hardware VTEPs in the VXLAN and the MAC addresses learned by the hardware VTEPs.

The specified VXLAN must have a VXLAN network identifier (VNI) configured, using the **vni** statement in the **[edit bridge-domains *bridge-domain-name* vxlan]**, **[edit routing-instance *routing-instance-name* vxlan]**, or **[edit vlans *vlan-name* vxlan]** hierarchy.

Also, for OVSDB-managed VXLANs, the multicast scheme described in "Understanding How Layer 2 BUM and Layer 3 Routed Multicast Traffic Are Handled with OVSDB" on page 20 is used. Therefore, specifying the **multicast-group** statement in the **[edit bridge-domains *bridge-domain-name* vxlan]**, **[edit routing-instances *routing-instance-name* vxlan]**, or **[edit vlans *vlan-name* vxlan]** hierarchy has no effect.

Required Privilege Level

admin—To view this statement in the configuration.
admin-control—To add this statement to the configuration.

Related Documentation

- Understanding Dynamically Configured VXLANs in an OVSDB Environment on page 39
- *Configuring OVSDB-Managed VXLANs*

port (OVSDB)

Syntax

port *number*;

Hierarchy Level

[edit protocols ovsdb controller protocol]

Release Information

Statement introduced in Junos OS Release 14.1R2.
Statement introduced in Junos OS Release 14.1X53-D10 for QFX Series switches.
Statement introduced in Junos OS Release 14.2 for EX Series switches.

Description

Specify the software-defined networking (SDN) controller port to which a Juniper Networks device that supports the Open vSwitch Database (OVSDB) management protocol connects.

Options

number—Number of SDN controller port.

Range: 1024 through 65,535

Default: 6632

Required Privilege Level

admin—To view this statement in the configuration.
admin-control—To add this statement to the configuration.

Related Documentation

- Understanding How to Set Up OVSDB Connections on a Juniper Networks Device on page 36

Copyright © 2018, Juniper Networks, Inc.

protocol (OVSDB)

Syntax

```
protocol protocol {
   port number;
}
```

Hierarchy Level

[edit protocols ovsdb controller]

Release Information

Statement introduced in Junos OS Release 14.1R2.
Statement introduced in Junos OS Release 14.1X53-D10 for QFX Series switches.
Statement introduced in Junos OS Release 14.2 for EX Series switches.

Description

Configure the security protocol that protects the connection between a Juniper Networks device that supports the Open vSwitch Database (OVSDB) management protocol and a software-defined networking (SDN) controller.

The Secure Sockets Layer (SSL) connection requires a private key and certificates, which must be stored in the **/var/db/certs** directory of the Juniper Networks device. See "Creating and Installing an SSL Key and Certificate on a Juniper Networks Device for Connection with SDN Controllers" on page 37.

Options

protocol—Establish a secure connection to the SDN controller, using SSL or TCP.

NOTE: **SSL is the only supported connection protocol.**

Default: ssl

The remaining statement is explained separately. See CLI Explorer.

Required Privilege Level

admin—To view this statement in the configuration.
admin-control—To add this statement to the configuration.

Related Documentation

- Understanding How to Set Up OVSDB Connections on a Juniper Networks Device on page 36

traceoptions (OVSDB)

Syntax

```
traceoptions {
  file <filename> <files number> <match regular-expression> <no-world-readable |
    world-readable> <size size>;
  flag flag;
  no-remote-trace;
}
```

Hierarchy Level

[edit protocols ovsdb]

Release Information

Statement introduced in Junos OS Release 14.1R2.
Statement introduced in Junos OS Release 14.1X53-D10 for QFX Series switches.
Statement introduced in Junos OS Release 14.2 for EX Series switches.

Description

Define tracing operations for the Open vSwitch Database (OVSDB) management protocol, which is supported on Juniper Networks devices.

Default

If you do not include this statement, OVSDB-specific tracing operations are not performed.

Options

file ***filename***—Name of file in which the system places the output of the tracing operations. By default, the system places all files in the **/var/log** directory.

Default: /var/log/vgd

files ***number***—(Optional) Maximum number of trace files. When a trace file reaches the size specified by the **size** option, the filename is appended with 0 and compressed. For example, a trace file named **trace-file.gz** would be renamed **trace-file.0.gz**. When **trace-file.0.gz** reaches the specified size, it is renamed **trace-file.1.gz** and its contents are compressed to **trace-file.0.gz**. This renaming scheme continues until the maximum number of trace files is reached. Then the oldest trace file is overwritten.

If you specify a maximum number of files, you also must specify a maximum file size with the **size** option and a filename.

Range: 2 through 1000 files

Default: 10 files

flag ***flag***—Tracing operation to perform. You can include one or more of the following flags:

all—All OVSDB events.

configuration—OVSDB configuration events.

core—OVSDB core events.

function—OVSDB function events.

Copyright © 2018, Juniper Networks, Inc.

interface—OVSDB interface events.

l2-client—OVSDB Layer 2 client events.

netconf-client—(QFX Series switches only) Events for the dynamic configuration of Virtual Extensible LANs (VXLANs).

ovs-client—OVSDB client events.

match *regular-expression*—(Optional) Only log lines that match the regular expression.

no-remote-trace—(Optional) Disable tracing and logging operations that track normal operations, error conditions, and packets that are generated by or passed through the Juniper Networks device.

no-world-readable—Restrict access to the trace files to the owner.

Default: no-world-readable

size *size*—(Optional) Maximum size of each trace file in bytes, kilobytes (KB), megabytes (MB), or gigabytes (GB). If you do not specify a unit, the default is bytes. If you specify a maximum file size, you also must specify a maximum number of trace files by using the **files** option and a filename by using the **file** option.

Syntax: *size* to specify bytes, *size*k to specify KB, *size*m to specify MB, or *size*g to specify GB.

Range: 10,240 through 1,073,741,824 bytes

Default: 128 KB

world-readable—Enable any user to access the trace files.

Required Privilege Level

admin—To view this statement in the configuration.
admin-control—To add this statement to the configuration.

Copyright © 2018, Juniper Networks, Inc.

CHAPTER 6

VXLAN Configuration Statements

- decapsulate-accept-inner-vlan on page 117
- encapsulate-inner-vlan on page 118
- multicast-group on page 119
- ovsdb-managed on page 120
- unreachable-vtep-aging-timer on page 121
- vni on page 122
- vtep-source-interface on page 123
- vxlan on page 124

decapsulate-accept-inner-vlan

Syntax

```
decapsulate-accept-inner-vlan
```

Hierarchy Level

```
[edit protocols l2-learning]
```

Release Information

Statement modified in Junos OS Release 14.1X53 for the QFX Series.

Description

Configure the switch to de-encapsulate and accept original VLAN tags in Virtual Extensible LAN (VXLAN) packets.

Required Privilege Level

routing—To view this statement in the configuration.
routing-control—To add this statement to the configuration.

Related Documentation

- Understanding VXLANs on page 5
- **encapsulate-inner-vlan on page 118**

encapsulate-inner-vlan

Syntax

```
encapsulate-inner-vlan
```

Hierarchy Level

[edit routing-instances *routing-instance-name* vlans *vlan-name* vxlan],
[edit vlans *vlan-name* vxlan]

Release Information

Statement introduced in Junos OS Release 14.1R2 for MX Series Routers.
Statement introduced in Junos OS Release 14.1X53-D10 for QFX Series.
Statement introduced in Junos OS Release 17.3R1 for EX9200 switches.

Description

Configure the switch to preserve the original VLAN tag (in the inner Ethernet packet) when performing Virtual Extensible LAN (VXLAN) encapsulation.

Default

The original tag is dropped when the packet is encapsulated.

Required Privilege Level

routing—To view this statement in the configuration.
routing-control—To add this statement to the configuration.

Related Documentation

- Understanding VXLANs on page 5
- Manually Configuring VXLANs on QFX Series and EX4600 Switches on page 71
- Examples: Manually Configuring VXLANs on QFX Series and EX4600 Switches on page 73
- **decapsulate-accept-inner-vlan on page 117**

Copyright © 2018, Juniper Networks, Inc.

multicast-group

Syntax

multicast-group *address*

Hierarchy Level

[edit vlans*vlan-name* vxlan]

Release Information

Statement introduced in Junos OS Release 14.1R2 for MX Series Routers.
Statement introduced in Junos OS Release 14.1X53-D10 for QFX Series.

Description

Assign a multicast group address to a Virtual Extensible LAN (VXLAN). All members of a VXLAN must use the same multicast group address.

Required Privilege Level

routing—To view this statement in the configuration.
routing-control—To add this statement to the configuration.

Related Documentation

- Understanding VXLANs on page 5
- Manually Configuring VXLANs on QFX Series and EX4600 Switches on page 71
- Examples: Manually Configuring VXLANs on QFX Series and EX4600 Switches on page 73

ovsdb-managed

Syntax

```
ovsdb-managed;
```

Hierarchy Level

```
[edit bridge-domains bridge-domain-name vxlan],
[edit routing-instances routing-instance-name bridge-domains bridge-domain-name vxlan],
[edit routing-instances routing-instance-name switch-options],
[edit routing-instances routing-instance-name vlans vlan-name vxlan],
[edit routing-instances routing-instance-name vxlan],
[edit switch-options],
[edit vlans vlan-name vxlan]
```

Release Information

Statement introduced in Junos OS Release 14.1R2.
Statement introduced in Junos OS Release 14.1X53-D10 for QFX Series switches.
Statement introduced in Junos OS Release 14.2 for EX Series switches.

Description

Disable a Juniper Networks device from learning about other Juniper Networks devices that function as hardware virtual tunnel endpoints (VTEPs) in a specified Virtual Extensible LAN (VXLAN) and the media access control (MAC) addresses learned by the hardware VTEPs. Instead, the Juniper Networks device uses the Open vSwitch Database (OVSDB) management protocol to learn about the hardware VTEPs in the VXLAN and the MAC addresses learned by the hardware VTEPs.

The specified VXLAN must have a VXLAN network identifier (VNI) configured, using the **vni** statement in the **[edit bridge-domains *bridge-domain-name* vxlan]**, **[edit routing-instance *routing-instance-name* vxlan]**, or **[edit vlans *vlan-name* vxlan]** hierarchy.

Also, for OVSDB-managed VXLANs, the multicast scheme described in "Understanding How Layer 2 BUM and Layer 3 Routed Multicast Traffic Are Handled with OVSDB" on page 20 is used. Therefore, specifying the **multicast-group** statement in the **[edit bridge-domains *bridge-domain-name* vxlan]**, **[edit routing-instances *routing-instance-name* vxlan]**, or **[edit vlans *vlan-name* vxlan]** hierarchy has no effect.

Required Privilege Level

admin—To view this statement in the configuration.
admin-control—To add this statement to the configuration.

Related Documentation

- Understanding Dynamically Configured VXLANs in an OVSDB Environment on page 39
- *Configuring OVSDB-Managed VXLANs*

Copyright © 2018, Juniper Networks, Inc.

unreachable-vtep-aging-timer

Syntax

```
unreachable-vtep-aging-timer [300–1800]
```

Hierarchy Level

[edit vlans*vlan-name* vxlan]

Release Information

Statement introduced in Junos OS Release 14.1R2 for MX Series routers.
Statement introduced in Junos OS Release 14.1X53-D10 for QFX Series switches.

Description

Configure the system to age out the address for the remote virtual tunnel endpoint (VTEP) if all the MAC addresses learned from that VTEP age out. The address for the remote VTEP expires the configured number of seconds after the last learned media access control (MAC) address expires.

Required Privilege Level

routing—To view this statement in the configuration.
routing-control—To add this statement to the configuration.

Related Documentation

- Understanding VXLANs on page 5
- Manually Configuring VXLANs on QFX Series and EX4600 Switches on page 71
- Examples: Manually Configuring VXLANs on QFX Series and EX4600 Switches on page 73

vni

Syntax

vni [1–16777214]

Hierarchy Level

[edit routing-instances *routing-instance-name* vlans *vlan-name* vxlan]
[edit vlans *vlan-name* vxlan]

Release Information

Statement introduced in Junos OS Release 14.1R2 for MX Series routers.
Statement introduced in Junos OS Release 14.1X53-D10 for QFX Series switches.
Statement introduced in Junos OS Release 17.3R1 for EX9200 switches.

Description

Assign a numeric value to identify a Virtual Extensible LAN (VXLAN). All members of a VXLAN must use the same VNI.

Options

vni—Value to specify in the **vni** attribute.

Range: 0 through 16,777,215

Required Privilege Level

routing—To view this statement in the configuration.
routing-control—To add this statement to the configuration.

Related Documentation

- Understanding VXLANs on page 5
- Manually Configuring VXLANs on QFX Series and EX4600 Switches on page 71
- Examples: Manually Configuring VXLANs on QFX Series and EX4600 Switches on page 73

Copyright © 2018, Juniper Networks, Inc.

vtep-source-interface

Syntax

```
vtep-source-interface;
interface-name;
(inet | inet6 );
```

Hierarchy Level

```
[edit switch-options]
[edit routing-instances routing-instance-name]
```

Release Information

Statement introduced in Junos OS Release 14.1X53-D10.
Support at the **[edit routing-instances *routing-instance-name*]** hierarchy level introduced in Junos OS Release 17.3.

Description

Configure a source interface for a Virtual Extensible LAN (VXLAN) tunnel. You must provide the name of a logical interface configured on the loopback interface.

Options

interface-name—Loopback interface name.

inet—IPv4 source address.

inet6—IPv6 source address.

Required Privilege Level

routing—To view this statement in the configuration.
routing-control—To add this statement to the configuration.

Related Documentation

- Understanding VXLANs on page 5
- Manually Configuring VXLANs on QFX Series and EX4600 Switches on page 71
- Examples: Manually Configuring VXLANs on QFX Series and EX4600 Switches on page 73

vxlan

Syntax

```
vxlan {
  encapsulate-inner-vlan;
  ingress-node-replication;
  multicast-group;
  ovsdb-managed;
  unreachable-vtep-aging-timer
  vni;
  multicast-group multicast-group;
  }
}
```

Hierarchy Level

```
[edit vlans]
[edit bridge-domains bridge-domain-name]
```

Release Information

Statement introduced in Junos OS Release 14.1X53-D10.
ingress-node-replication option added for EVPN VXLAN on QFX5100 switches in Junos OS Release 14.1X53-D30.
multicast-group*multicast-group* option added for MX series routers with MPC and MIC interfaces in Junos OS Release 17.2.

Description

Configure support for Virtual Extensible LANs (VXLANs) on a Juniper Networks device.

Options

multicast-group *mulicast-group*—Multicast group (IPv4 or IPv6 addresses) registered for VXLAN segment.

The remaining statements are explained separately. See CLI Explorer.

Required Privilege Level

routing—To view this statement in the configuration.
routing-control—To add this statement to the configuration.

Related Documentation

- Understanding VXLANs on page 5
- Manually Configuring VXLANs on QFX Series and EX4600 Switches on page 71
- Examples: Manually Configuring VXLANs on QFX Series and EX4600 Switches on page 73

Copyright © 2018, Juniper Networks, Inc.

CHAPTER 7

OVSDB Operational Commands

- clear ovsdb commit failures
- show ovsdb commit failures
- show ovsdb controller
- show ovsdb interface
- show ovsdb logical-switch
- show ovsdb mac
- show ovsdb statistics interface
- show ovsdb tunnels
- show ovsdb virtual-tunnel-end-point
- show vpls mac-table

Copyright © 2018, Juniper Networks, Inc.

clear ovsdb commit failures

Syntax

```
clear ovsdb commit failures
<transaction-id>
```

Release Information

Command introduced in Junos OS Release 14.1X53-D26 for QFX Series switches.

Description

Remove a transaction from a queue maintained by a Juniper Networks switch that supports the Open vSwitch Database (OVSDB) management protocol and Virtual Extensible LANs (VXLANs). The transaction includes OVSDB-managed VXLANs and associated logical interfaces that the Juniper Networks switch dynamically configured and tried to commit but was unable to because of an issue with one or more of the configurations. In addition to removing the transaction, entering the **clear ovsdb commit failures** command causes the Juniper Networks switch to automatically retry committing all configurations in the transaction.

If there is an issue with one or more of the configurations in a transaction, this causes all configurations in the transaction, even the ones that are correctly configured, to remain uncommitted and in the queue until you troubleshoot and resolve the configuration issue(s).

You can display an erroneous transaction by entering the **show ovsdb commit failures** command. In the output that appears, you must determine which configuration(s) are erroneous and therefore prevent the Juniper Networks switch from committing the configurations in the transaction.

Issues that can cause commitment errors include but are not limited to the detection of the same VXLAN name or VXLAN network identifier (VNI) in a dynamically configured VXLAN and in a VXLAN that was previously configured using the Junos OS CLI.

To monitor for issues with dynamically configured OVSDB-managed VXLANs and their associated interfaces, we recommend checking for system log messages and traceoptions files for OVSDB.

After resolving the error(s), enter the **clear ovsdb commit failures** command to remove the transaction from the queue and retry committing all configurations in the transaction.

NOTE: **While an erroneous transaction exists in the queue, the Juniper Networks switch cannot commit the dynamic configurations of additional VXLANs and their associated logical interfaces. The commitment of these VXLANs and logical interfaces remain in a pending state until all VXLAN and logical interface configurations in the erroneous transaction are resolved and successfully committed.**

Options

none—Remove the transaction that currently appears in the **show ovsdb commit failures** command output, and retry committing all configurations in the transaction.

Copyright © 2018, Juniper Networks, Inc.

transaction-id—Remove the transaction with the specified numerical ID, and retry committing the configurations in the transaction.

Required Privilege Level clear

Related Documentation

- show ovsdb commit failures on page 128

List of Sample Output

clear ovsdb commit failures on page 127
clear ovsdb commit failures (Specific Transaction) on page 127

Sample Output

clear ovsdb commit failures

```
user@host> clear ovsdb commit failures
```

clear ovsdb commit failures (Specific Transaction)

```
user@host> clear ovsdb commit failures 1
```

show ovsdb commit failures

Syntax

```
show ovsdb commit failures
<transaction-id>
```

Release Information Command introduced in Junos OS Release 14.1X53-D26 for QFX Series switches.

Description Display configurations of Open vSwitch Database (OVSDB)-managed Virtual Extensible LANs (VXLANs) and associated logical interfaces that the Juniper Networks switch dynamically configured but was unable to commit.

For each OVSDB-managed VXLAN and associated logical interface that you plan to implement in a Junos OS environment, you must configure equivalent entities in NSX Manager or in the NSX API for an NSX environment, or in the Contrail Web user interface for a Contrail environment. The software-defined networking (SDN) controller pushes these configurations to the connected Juniper Networks switch by way of the OVSDB schema for physical devices. After the Juniper Networks switch receives these configurations, it dynamically configures a Junos OS-equivalent VXLAN and associated logical interface, and attempts to commit the configurations.

During the commitment of the dynamic configurations, If there is an issue with one or more of the configurations, all configurations in the transaction, even the ones that are correctly configured, remain uncommitted and are saved in a queue. All configurations in the transaction remain uncommitted and in the queue until you troubleshoot and resolve the configuration issues. After you resolve the configuration issues, you must use the clear ovsdb commit failures command to remove the transaction from the queue and retry committing the configurations.

NOTE: **While an erroneous transaction exists in the queue, the Juniper Networks switch cannot commit the dynamic configurations of additional VXLANs and their associated logical interfaces. The commitment of these VXLANs and logical interfaces remain in a pending state until all VXLAN and logical interface configurations in the erroneous transaction are resolved and successfully committed.**

Issues that can cause commitment errors include but are not limited to the detection of the same VXLAN name or VXLAN network identifier (VNI) in a dynamically configured VXLAN and in a VXLAN that was previously configured using the Junos OS CLI.

To monitor for issues with dynamically configured OVSDB-managed VXLANs and their associated interfaces, we recommend checking for system log messages and traceoptions files for OVSDB.

Options **none**—Display information about an erroneous transaction.

 Copyright © 2018, Juniper Networks, Inc.

transaction-id—Display information about the transaction with the specified numerical ID.

Required Privilege Level admin

Related Documentation

- Understanding Dynamically Configured VXLANs in an OVSDB Environment on page 39
- traceoptions (OVSDB) on page 114

List of Sample Output

show ovsdb commit failures on page 129
show ovsdb commit failure (Specific Transaction) on page 129

Output Fields Table 18 on page 129 lists the output fields for the **show ovsdb commit failures** command. Output fields are listed in the approximate order in which they appear.

Table 18: show ovsdb commit failures Output Fields

Field Name	Field Description
Txn ID	ID assigned to a transaction by the Juniper Networks switch.
Logical-switch	Name of the VXLAN that the Juniper Networks switch dynamically configured but was unable to commit the configuration of.
Port	Name of an OVSDB-managed physical interface that is associated with the VXLAN.
VLAN ID	ID that is assigned to the VXLAN.

Sample Output

show ovsdb commit failures

```
user@host> show ovsdb commit failures

Txn ID      Logical-switch                          Port             VLAN ID
1           28805c1d-0122-495d-85df-19abd647d772
1                                                   xe-0/0/5:0       1016
1           9acc24b3-7b0a-4c2e-b572-3370c3e1acff
1                                                   xe-0/0/5:0       1017
...
```

show ovsdb commit failure (Specific Transaction)

```
user@host> how ovsdb commit failures 1

Txn ID      Logical-switch                          Port             VLAN ID
1           28805c1d-0122-495d-85df-19abd647d772
1                                                   xe-0/0/5:0       1016
1           9acc24b3-7b0a-4c2e-b572-3370c3e1acff
1                                                   xe-0/0/5:0       1017
...
```

Copyright © 2018, Juniper Networks, Inc.

show ovsdb controller

Syntax

```
show ovsdb controller
<address ip-address>
```

Release Information

Command introduced in Junos OS Release 14.1R2.
Command introduced in Junos OS Release 14.1X53-D10 for QFX Series switches.
Command introduced in Junos OS Release 14.2 for EX Series switches.

Description

Display information and connection status for software-defined networking (SDN) controllers to which the Juniper Networks device is connected.

Options

none—Display information about all SDN controllers to which the Juniper Networks device is connected.

address *ip-address*—Display information about the SDN controller at the specified IP address.

Required Privilege Level

admin

Related Documentation

- *Setting Up the OVSDB Protocol on Juniper Networks Devices that Support Manual Configuration of VXLANs*
- Setting Up OVSDB on Juniper Networks Devices That Support the Dynamic Configuration of VXLANs on page 38
- Understanding How to Set Up OVSDB Connections on a Juniper Networks Device on page 36

List of Sample Output

show ovsdb controller on page 132
show ovsdb controller address on page 132

Output Fields

Table 19 on page 131 lists the output fields for the **show ovsdb controller** command. Output fields are listed in the approximate order in which they appear.

Table 19: show ovsdb controller Output Fields

Field Name	Field Description
Controller IP address	IP address of the SDN controller to which the Juniper Networks device is connected.
Controller protocol	Protocol used by the Juniper Networks device to initiate the connection.
Controller port	Port to which the Juniper Networks device is connected.
Controller connection	State of the connection with the SDN controller.

Table 19: show ovsdb controller Output Fields (continued)

Field Name	Field Description
Controller seconds-since-connect	Number of seconds since the connection with the SDN controller was established.
Controller seconds-since-disconnect	Number of seconds since the connection with the SDN controller was dropped.
Controller connection status	Status of the connection with the SDN controller.

Sample Output

show ovsdb controller

```
user@host> show ovsdb controller
VTEP controller information:
Controller IP address: 10.168.66.189
Controller protocol: ssl
Controller port: 6632
Controller connection: up
Controller seconds-since-connect: 56290
Controller seconds-since-disconnect: 0
Controller connection status: active

Controller IP address: 10.168.181.54
Controller protocol: ssl
Controller port: 6632
Controller connection: up
Controller seconds-since-connect: 56292
Controller seconds-since-disconnect: 0
Controller connection status: active

Controller IP address: 10.168.182.45
Controller protocol: ssl
Controller port: 6632
Controller connection: up
Controller seconds-since-connect: 56292
Controller seconds-since-disconnect: 0
Controller connection status: active
```

show ovsdb controller address

```
user@host> show ovsdb controller address 10.168.182.45
VTEP controller information:
Controller IP address: 10.168.182.45
Controller protocol: ssl
Controller port: 6632
Controller connection: up
Controller seconds-since-connect: 56347
Controller seconds-since-disconnect: 0
Controller connection status: active
```


Copyright © 2018, Juniper Networks, Inc.

show ovsdb interface

Syntax

```
show ovsdb interface
<interface-name>
```

Release Information

Command introduced in Junos OS Release 14.1R2.
Command introduced in Junos OS Release 14.1X53-D10 for QFX Series switches.
Command introduced in Junos OS Release 14.2 for EX Series switches.

Description

Display information about Open vSwitch Database (OVSDB)-managed interfaces configured by using the **interfaces** ***interface-name*** statement in the [**edit protocols ovsdb**] hierarchy.

Options

none—Display information about all OVSDB-managed interfaces.

interface-name—Display information about the specified OVSDB-managed interface.

Required Privilege Level

admin

Related Documentation

- *Setting Up the OVSDB Protocol on Juniper Networks Devices that Support Manual Configuration of VXLANs*
- Setting Up OVSDB on Juniper Networks Devices That Support the Dynamic Configuration of VXLANs on page 38

List of Sample Output

show ovsdb interface on page 134
show ovsdb (Specific Interface) on page 134

Output Fields

Table 20 on page 133 lists the output fields for the **show ovsdb interface** command. Output fields are listed in the approximate order in which they appear.

Table 20: show ovsdb interface Output Fields

Field Name	Field Description
Interface	Name of interface.
VLAN ID	ID of Virtual Extensible LAN (VXLAN) with which the interface is associated. NOTE: This field is not supported by MX Series routers or EX9200 switches.
Bridge domain or VLAN	Bridge domain or VLAN under which the VXLAN is created. NOTE: This field is not supported by MX Series routers or EX9200 switches.

Sample Output

show ovsdb interface

```
user@host> show ovsdb interface
Interface               VLAN ID         Bridge-domain
ge-7/0/9.0
ge-7/0/9.1
irb.11
irb.12
irb.2
irb.3
xe-10/3/0.0
xe-10/3/0.1
```

show ovsdb (Specific Interface)

```
user@host> show ovsdb interface ge-7/0/9.0
Interface               VLAN ID         Bridge-domain
ge-7/0/9.0
```


Copyright © 2018, Juniper Networks, Inc.

show ovsdb logical-switch

Syntax

```
show ovsdb logical-switch
<logical-switch-name>
```

Release Information

Command introduced in Junos OS Release 14.1R2.
Command introduced in Junos OS Release 14.1X53-D10 for QFX Series switches.
Command introduced in Junos OS Release 14.2 for EX Series switches.

Description

NOTE: In the Open vSwitch Database (OVSDB) schema for physical devices, the logical switch table stores information about the Layer 2 broadcast domain that you configured in a VMware NSX or Contrail environment. In the NSX environment, the Layer 2 broadcast domain is known as a *logical switch*, while in the Contrail environment, the domain is known as a *virtual network*.

In the context of the **show ovsdb logical-switch** command, the term *logical switch* refers to the logical switch or virtual network that was configured in the NSX or Contrail environments, respectively, and the corresponding configuration that was pushed to the OVSDB schema.

Display information about logical switches and the corresponding Virtual Extensible LANs (VXLANs), which were configured on the Juniper Networks device.

In the command output, each logical switch is identified by a universally unique identifier (UUID), which in the context of this command, is also known as a logical switch name.

The **show ovsdb logical-switch** command displays the state of the logical switch (**Flags**), which can be one of the following:

Created by Controller—A logical switch is configured. However, a corresponding VXLAN is not yet configured. In this state, the logical switch and corresponding VXLAN are not yet operational.

Created by L2ALD—A VXLAN is configured. However, a corresponding logical switch is not yet configured. In this state, the logical switch and corresponding VXLAN are not yet operational.

Created by both—A logical switch and a corresponding VXLAN are configured. In this state, the logical switch and corresponding VXLAN are operational.

Tunnel key mismatch—The VNIs specified in the logical switch and corresponding VXLAN configurations do not match. In this state, the logical switch and corresponding VXLAN are not yet operational.

Options

none—Display information about all logical switches that are present in the OVSDB schema for physical devices.

logical-switch-name—Display information about the specified logical switch.

Required Privilege Level admin

Related Documentation

- OVSDB Schema for Physical Devices on page 17
- Troubleshooting a Nonoperational Logical Switch and Corresponding Junos OS OVSDB-Managed VXLAN on page 87

List of Sample Output

show ovsdb logical-switch on page 136
show ovsdb logical-switch (Specific Logical Switch) on page 137

Output Fields Table 21 on page 136 lists the output fields for the **show ovsdb logical-switch** command. Output fields are listed in the approximate order in which they appear.

Table 21: show ovsdb logical-switch Output Fields

Field Name	Field Description
Logical Switch Name	UUID that is automatically generated and assigned to the logical switch. When you configure the corresponding VXLAN in the Junos OS CLI, you must specify the same UUID as the VXLAN name.
Flags	State of the logical switch. For possible states, see the Description section of this topic.
VNI	VNI that is configured for the logical switch and corresponding VXLAN.
Num of Remote MAC	The total number of remote media access control (MAC) addresses associated with the logical switch. These addresses are learned by software and hardware virtual tunnel endpoints (VTEPs).
Num of Local MAC	The total number of local MAC addresses associated with the logical switch. *Local MAC addresses* are addresses learned on the local physical ports.

Sample Output

show ovsdb logical-switch

```
user@host> show ovsdb logical-switch
Logical switch information:
Logical Switch Name: 24a76aff-7e61-4520-a78d-3eca26ad7510
Flags: Created by both
VNI: 3
Num of Remote MAC: 13
Num of Local MAC: 12
Logical Switch Name: 9b4f880e-dac8-4612-a832-97ad9dec270f
Flags: Created by Controller
VNI: 50
Num of Remote MAC: 0
Num of Local MAC: 0
Logical Switch Name: bc0da2da-6c16-44bf-b655-442484294ded
```

 Copyright © 2018, Juniper Networks, Inc.

```
Flags: Created by Controller
VNI: 51
Num of Remote MAC: 0
Num of Local MAC: 0
```

show ovsdb logical-switch (Specific Logical Switch)

```
user@host> show ovsdb logical-switch 24a76aff-7e61-4520-a78d-3eca26ad7510
```

```
Logical switch information:
Logical Switch Name: 24a76aff-7e61-4520-a78d-3eca26ad7510
Flags: Created by both
VNI: 3
Num of Remote MAC: 13
Num of Local MAC: 12
```

show ovsdb mac

Syntax

```
show ovsdb mac
<address mac-address>
<local>
<logical-switch logical-switch-uuid>
<multicast>
<remote>
<unicast>
```

Release Information

Command introduced in Junos OS Release 14.1R2.
Command introduced in Junos OS Release 14.1X53-D10 for QFX Series switches.
Command introduced in Junos OS Release 14.2 for EX Series switches.

Description

Display media access control (MAC) addresses, as well as information about the MAC addresses, learned by a Juniper Networks device that functions as a hardware virtual tunnel endpoint (VTEP). Using the Open vSwitch Database (OVSDB) management protocol, this hardware VTEP can learn about MAC addresses directly or from other software or hardware VTEPs. The MAC addresses learned directly by the hardware VTEP are known as *local addresses*, while the addresses learned from other software or hardware VTEPs are known as *remote addresses*.

Options

Use one or more of the following options to display a more specific list of MAC addresses and information about the MAC addresses. For example, to display a list of local unicast MAC addresses, you can issue the **show ovsdb mac local unicast** command.

none—Display all MAC addresses, which includes all local, remote, unicast, and multicast addresses associated with all logical switches.

address *mac-address*—Display the specified MAC address.

count—(All Juniper Networks devices that support OVSDB except EX9200 switches) Display the number of MAC addresses learned by the Juniper Networks device. Using this option alone, the number includes all local, remote, unicast, and multicast MAC addresses associated with all logical switches in the logical switch table of the OVSDB schema for physical devices. You can use this option with one or more of the other options to display a more specific count of MAC addresses. For example, to display the number of local and remote unicast MAC addresses, you can issue the **show ovsdb mac count local remote unicast** command.

local—Display all local MAC addresses.

logical-switch *logical-switch-uuid*—Display all MAC addresses associated with the specified logical switch in the logical switch table of the OVSDB schema for physical devices.

multicast—Display all multicast MAC addresses.

remote—Display all remote MAC addresses.

Copyright © 2018, Juniper Networks, Inc.

unicast—Display all unicast MAC addresses.

Required Privilege Level admin

Related Documentation
- OVSDB Schema for Physical Devices on page 17

List of Sample Output
show ovsdb mac on page 139
show ovsdb mac address on page 140
show ovsdb mac logical-switch on page 140
show ovsdb mac local unicast on page 141
show ovsdb mac (Count of All Local, Remote, Unicast, and Multicast MAC Addresses for All Logical Switches) on page 141

Output Fields Table 22 on page 139 lists the output fields for the **show ovsdb mac** command. Output fields are listed in the approximate order in which they appear.

Table 22: show ovsdb mac Output Fields

Field Name	Field Description
Logical Switch Name	Universally unique identifier (UUID) of the logical switch.
MAC Address	MAC addresses of virtual machines (VMs).
IP Address	IP address of VMs. NOTE: If the IP addresses of VMs are not published by the SDN controller, this field displays **0.0.0.0**.
Encapsulation	Encapsulation type.
VTEP Address	IP address of the hardware or software VTEP from which the MAC address was learned. Further, this VTEP can forward VM traffic to the associated host.
MAC Count	NOTE: This field is supported by all Juniper Networks devices that support OVSDB except EX9200 switches. Number of all or specified MAC addresses learned by the Juniper Networks device.

Sample Output

show ovsdb mac

```
user@host> show ovsdb mac
```

```
Logical Switch Name: 24a76aff-7e61-4520-a78d-3eca26ad7510
  Mac                   IP                Encapsulation      Vtep
  Address               Address                              Address
  02:00:00:00:03:01     0.0.0.0           Vxlan over Ipv4    10.255.18.22
  02:00:00:00:03:02     0.0.0.0           Vxlan over Ipv4    10.255.18.22
```

```
  02:00:00:00:03:03      0.0.0.0            Vxlan over Ipv4    10.255.18.22
  02:00:00:00:03:04      0.0.0.0            Vxlan over Ipv4    10.255.18.22
  02:00:00:00:03:05      0.0.0.0            Vxlan over Ipv4    10.255.18.22
  04:00:00:00:03:05      0.0.0.0            Vxlan over Ipv4    10.255.18.22
  06:00:00:00:03:01      0.0.0.0            Vxlan over Ipv4    10.255.18.22
  06:00:00:00:03:02      0.0.0.0            Vxlan over Ipv4    10.255.18.22
  06:00:00:00:03:03      0.0.0.0            Vxlan over Ipv4    10.255.18.22
  06:00:00:00:03:04      0.0.0.0            Vxlan over Ipv4    10.255.18.22
  06:00:00:00:03:05      0.0.0.0            Vxlan over Ipv4    10.255.18.22
  40:b4:f0:06:6f:f0      0.0.0.0            Vxlan over Ipv4    10.255.18.22
  ff:ff:ff:ff:ff:ff      0.0.0.0            Vxlan over Ipv4    10.100.100.1

Logical Switch Name: bf6d4fd4-f5f6-430c-8c37-4033ef1c55ab
  Mac                    IP                 Encapsulation      Vtep
  Address                Address                               Address
  02:00:00:00:11:01      0.0.0.0            Vxlan over Ipv4    10.1.1.29
  02:00:00:00:11:02      0.0.0.0            Vxlan over Ipv4    10.1.1.29
  02:00:00:00:11:03      0.0.0.0            Vxlan over Ipv4    10.1.1.29
  02:00:00:00:11:04      0.0.0.0            Vxlan over Ipv4    10.1.1.29
  02:00:00:00:11:05      0.0.0.0            Vxlan over Ipv4    10.1.1.29
  04:00:00:00:11:05      0.0.0.0            Vxlan over Ipv4    10.1.1.29
  06:00:00:00:11:01      0.0.0.0            Vxlan over Ipv4    10.1.1.29
  06:00:00:00:11:02      0.0.0.0            Vxlan over Ipv4    10.1.1.29
  06:00:00:00:11:03      0.0.0.0            Vxlan over Ipv4    10.1.1.29
  06:00:00:00:11:04      0.0.0.0            Vxlan over Ipv4    10.1.1.29
  06:00:00:00:11:05      0.0.0.0            Vxlan over Ipv4    10.1.1.29
  40:b4:f0:06:6f:f0      0.0.0.0            Vxlan over Ipv4    10.1.1.29
  00:23:9c:5e:a7:f0      0.0.0.0            Vxlan over Ipv4    10.255.18.22
  08:00:00:00:11:01      0.0.0.0            Vxlan over Ipv4    10.255.18.22
  08:00:00:00:11:02      0.0.0.0            Vxlan over Ipv4    10.255.18.22
  08:00:00:00:11:03      0.0.0.0            Vxlan over Ipv4    10.255.18.22
  08:00:00:00:11:04      0.0.0.0            Vxlan over Ipv4    10.255.18.22
  08:00:00:00:11:05      0.0.0.0            Vxlan over Ipv4    10.255.18.22
  ff:ff:ff:ff:ff:ff      0.0.0.0            Vxlan over Ipv4    10.110.110.1
...
```

show ovsdb mac address

```
user@host> show ovsdb mac address 02:00:00:00:03:01

  Mac                    IP                 Encapsulation      Vtep
  Address                Address                               Address
  02:00:00:00:03:01      0.0.0.0            Vxlan over Ipv4    10.255.18.22
```

show ovsdb mac logical-switch

```
user@host> show ovsdb mac logical-switch bf6d4fd4-f5f6-430c-8c37-4033ef1c55ab

Logical Switch Name: bf6d4fd4-f5f6-430c-8c37-4033ef1c55ab
  Mac                    IP                 Encapsulation      Vtep
  Address                Address                               Address
  02:00:00:00:11:01      0.0.0.0            Vxlan over Ipv4    10.1.1.29
  02:00:00:00:11:02      0.0.0.0            Vxlan over Ipv4    10.1.1.29
  02:00:00:00:11:03      0.0.0.0            Vxlan over Ipv4    10.1.1.29
  02:00:00:00:11:04      0.0.0.0            Vxlan over Ipv4    10.1.1.29
  02:00:00:00:11:05      0.0.0.0            Vxlan over Ipv4    10.1.1.29
  04:00:00:00:11:05      0.0.0.0            Vxlan over Ipv4    10.1.1.29
  06:00:00:00:11:01      0.0.0.0            Vxlan over Ipv4    10.1.1.29
```


Copyright © 2018, Juniper Networks, Inc.

```
  06:00:00:00:11:02      0.0.0.0            Vxlan over Ipv4    10.1.1.29
  06:00:00:00:11:03      0.0.0.0            Vxlan over Ipv4    10.1.1.29
  06:00:00:00:11:04      0.0.0.0            Vxlan over Ipv4    10.1.1.29
  06:00:00:00:11:05      0.0.0.0            Vxlan over Ipv4    10.1.1.29
  40:b4:f0:06:6f:f0      0.0.0.0            Vxlan over Ipv4    10.1.1.29
  00:23:9c:5e:a7:f0      0.0.0.0            Vxlan over Ipv4    10.255.18.22
  08:00:00:00:11:01      0.0.0.0            Vxlan over Ipv4    10.255.18.22
  08:00:00:00:11:02      0.0.0.0            Vxlan over Ipv4    10.255.18.22
  08:00:00:00:11:03      0.0.0.0            Vxlan over Ipv4    10.255.18.22
  08:00:00:00:11:04      0.0.0.0            Vxlan over Ipv4    10.255.18.22
  08:00:00:00:11:05      0.0.0.0            Vxlan over Ipv4    10.255.18.22
  ff:ff:ff:ff:ff:ff      0.0.0.0            Vxlan over Ipv4    10.110.110.1
```

show ovsdb mac local unicast

```
user@host> show ovsdb mac local unicast
```

```
Logical Switch Name: 24a76aff-7e61-4520-a78d-3eca26ad7510
  Mac                    IP                 Encapsulation      Vtep
  Address                Address                               Address
  02:00:00:00:03:01      0.0.0.0            Vxlan over Ipv4    10.255.181.72
  02:00:00:00:03:02      0.0.0.0            Vxlan over Ipv4    10.255.181.72
  02:00:00:00:03:03      0.0.0.0            Vxlan over Ipv4    10.255.181.72
  02:00:00:00:03:04      0.0.0.0            Vxlan over Ipv4    10.255.181.72
  02:00:00:00:03:05      0.0.0.0            Vxlan over Ipv4    10.255.181.72
  04:00:00:00:03:05      0.0.0.0            Vxlan over Ipv4    10.255.181.72
  06:00:00:00:03:01      0.0.0.0            Vxlan over Ipv4    10.255.181.72
  06:00:00:00:03:02      0.0.0.0            Vxlan over Ipv4    10.255.181.72
  06:00:00:00:03:03      0.0.0.0            Vxlan over Ipv4    10.255.181.72
  06:00:00:00:03:04      0.0.0.0            Vxlan over Ipv4    10.255.181.72
  06:00:00:00:03:05      0.0.0.0            Vxlan over Ipv4    10.255.181.72
  40:b4:f0:06:6f:f0      0.0.0.0            Vxlan over Ipv4    10.255.181.72
...
```

show ovsdb mac (Count of All Local, Remote, Unicast, and Multicast MAC Addresses for All Logical Switches)

```
user@host> show ovsdb mac count
```

```
MAC count: 6877
```

show ovsdb statistics interface

Syntax

```
show ovsdb statistics interface
<interface-name>
```

Release Information

Command introduced in Junos OS Release 14.1R2.
Command introduced in Junos OS Release 14.1X53-D10 for QFX Series switches.
Command introduced in Junos OS Release 14.2 for EX Series switches.

Description

Display statistics for Open vSwitch Database (OVSDB)-managed interfaces configured by using the **interfaces** ***interface-name*** statement in the [**edit protocols ovsdb**] hierarchy.

When an interface is configured as OVSDB-managed, the collection of statistics for that interface begins, and the statistics displayed at any given time reflects the data collected up to that point.

Options

none—Display statistics for all configured OVSDB-managed interfaces.

interface-name—Display statistics for the specified interface.

Required Privilege Level

admin

Related Documentation

- interfaces on page 108

List of Sample Output

show ovsdb statistics interface on page 143
show ovsdb statistics interface (Specific Interface) on page 143

Output Fields

Table 23 on page 142 lists the output fields for the **show ovsdb statistics interface** command. Output fields are listed in the approximate order in which they appear.

Table 23: show ovsdb statistics interface Output Fields

Field Name	Field Description
Num of rx pkts	Number of packets received by the interface.
Num of tx pkts	Number of packets sent by the interface.
Num of rx bytes	Number of bytes received by the interface.
Num of tx bytes	Number of bytes sent by the interface.

Copyright © 2018, Juniper Networks, Inc.

Sample Output

show ovsdb statistics interface

user@host> **show ovsdb statistics interface**

```
Interface Name: ge-7/0/9.0
Num of rx pkts: 945                    Num of tx pkts: 113280890
Num of rx bytes: 56700                  Num of tx bytes: 57531319540
Interface Name: ge-7/0/10.0
Num of rx pkts: 459                    Num of tx pkts: 473840856
Num of rx bytes: 84747                  Num of tx bytes: 45830738532
Interface Name: ge-7/0/11.0
Num of rx pkts: 305                    Num of tx pkts: 367483456
Num of rx bytes: 98974                  Num of tx bytes: 33495468092
```

show ovsdb statistics interface (Specific Interface)

user@host> **show ovsdb statistics interface ge-7/0/9.0**

```
Interface Name: ge-7/0/9.0
Num of rx pkts: 945                    Num of tx pkts: 113280890
Num of rx bytes: 56700                  Num of tx bytes: 57531319540
```

show ovsdb tunnels

Syntax

```
show ovsdb tunnels
<destination-address ip-address>
<source-address ip-address>
```

Release Information Command introduced in Junos OS Release 14.1X53-D40 for QFX Series switches.

Description Display the status of tunnels established between Juniper Networks devices that act as hardware virtual tunnel endpoints (VTEPs), and software VTEPs and service nodes that replicate Layer 2 broadcast, unknown unicast, and multicast (BUM) packets within a Virtual Extensible LAN (VXLAN) managed by the Open vSwitch Database (OVSDB) protocol. (In this topic, the software VTEPs and service nodes are known collectively as *replicators*.)

In this topology with VMware NSX controllers deployed, the hardware VTEP uses the Bidirectional Forwarding Detection (BFD) protocol to monitor replicators learned by the NSX controllers. In this situation, BFD is used to decrease the possibility that BUM packets are forwarded to non-functional replicators and eventually dropped.

To monitor the status of the replicators, the hardware VTEP, replicators, and NSX controllers must all be BFD-capable. (Juniper Networks switches that support OVSDB and VXLAN are BFD-capable.) In addition, the NSX controller must enable BFD on the hardware VTEP and replicators. When the NSX controller has enabled BFD on the hardware VTEP and replicators, their BFD status is considered to be enabled. If the NSX controller cannot enable BFD on these entities (for example, the entity is not BFD-capable), their BFD status is considered to be disabled,

With the BFD protocol enabled on a hardware VTEP, upon receipt of a BUM packet on an OVSDB-managed interface, the hardware VTEP can choose a functional replicator to handle the packet.

In the output of the **show ovsdb tunnels** command, each tunnel is identified by the IP addresses of the source and destination entities at the ends of the tunnel. Each tunnel that appears is from the perspective of the hardware VTEP. The hardware VTEP provides information about its end of a particular tunnel, while the NSX controller collects the same information from the replicator at the other end of the tunnel. Both hardware VTEP and NSX controller push the information to the tunnel table in the OVSDB schema for physical devices.

Some settings of the **BFD Enabled** and **BFD Status** fields in the **show ovsdb tunnels** output can indicate issues:

- A tunnel with a **BFD Enabled** setting of **Enabled** and a **BFD Status** of **Down** usually indicates that there is an issue with the replicator.
- A tunnel with a **BFD Enabled** setting of **Disabled** and a **BFD Status** of **AdminDown** indicates that either the hardware VTEP, the NSX controller, or the replicator is not

 Copyright © 2018, Juniper Networks, Inc.

BFD-capable or is having an issue with BFD. As a result, a BFD session between the hardware VTEP and the replicator cannot be enabled.

Options Use one or more of the following options to display a more specific list of tunnels.

none—Display all tunnels.

destination-address *ip-address*(Optional)—Display tunnels that have the specified destination address.

source-address *ip-address*(Optional)—Display tunnels that have the specified source address.

Required Privilege Level admin

Related Documentation

- Understanding BFD in a VMware NSX Environment with OVSDB and VXLAN on page 21

List of Sample Output

show ovsdb tunnels on page 146
show ovsdb tunnels (Specific Destination) on page 146
show ovsdb tunnels (Specific Source) on page 146

Output Fields Table 24 on page 145 lists the output fields for the **show ovsdb tunnels** command. Output fields are listed in the approximate order in which they appear.

Table 24: show ovsdb tunnels Output Fields

Field Name	Field Descriptions
SRC IP Address	IP address of the OVSDB-managed physical interface from which the BFD control packet is received.
DST IP Address	IP address of the replicator to which the BFD control packet is sent.
BFD Enabled	Status of the BFD protocol on the hardware VTEP and replicator at either ends of the tunnel (**Enabled** or **Disabled**).
BFD Status	Status of a BFD session between a hardware VTEP and a replicator. Possible values include: • **Up**—The BFD session is enabled and up. • **Down**—The BFD session is considered to be down if a replicator does not respond to three BFD control messages. • **AdminDown**—The BFD session is disabled by the NSX controller.

Sample Output

show ovsdb tunnels

```
user@host> show ovsdb tunnels
SRC IP Address       DST IP Address       BFD Enabled     BFD Status
192.168.110.110      192.168.100.1        Enabled         Up
192.168.110.110      192.168.100.2        Disabled        AdminDown
192.168.110.120      192.168.100.20       Enabled         Down
```

show ovsdb tunnels (Specific Destination)

```
user@host> show ovsdb tunnels destination-address 192.168.100.1
SRC IP Address       DST IP Address       BFD Enabled     BFD Status
192.168.110.110      192.168.100.1        Enabled         Up
```

show ovsdb tunnels (Specific Source)

```
user@host> show ovsdb tunnels source-address 192.168.110.110
SRC IP Address       DST IP Address       BFD Enabled     BFD Status
192.168.110.110      192.168.100.1        Enabled         Up
192.168.110.110      192.168.100.2        Disabled        AdminDown
```


Copyright © 2018, Juniper Networks, Inc.

show ovsdb virtual-tunnel-end-point

Syntax

```
show ovsdb virtual-tunnel-end-point
address <ip-address>
encapsulation <encapsulation-type>
```

Release Information

Command introduced in Junos OS Release 14.1R2.
Command introduced in Junos OS Release 14.1X53-D10 for QFX Series switches.
Command introduced in Junos OS Release 14.2 for EX Series switches.

Description

Display information about the following entities that the Juniper Networks device has learned:

- Other Juniper Networks devices that function as hardware virtual tunnel endpoints (VTEPs)
- Software VTEPs
- Service nodes
- Top-of-rack service nodes (TSNs)

Options

none—Display information about all VTEPs, service nodes, and TSNs that the Juniper Networks device has learned.

address *ip-address*—Display information about the entity with the specified IP address.

encapsulation *encapsulation-type*—Display information about all entities with the specified encapsulation type.

Required Privilege Level

admin

List of Sample Output

show ovsdb virtual-tunnel-end-point on page 148
show ovsdb virtual-tunnel-end-point address (Specific Address) on page 148
show ovsdb virtual-tunnel-end-point encapsulation (Specific Encapsulation) on page 148
show ovsdb virtual-tunnel-end-point address (Specific Address) encapsulation (Specific Encapsulation) on page 148

Output Fields

Table 25 on page 147 lists the output fields for the **show ovsdb virtual-tunnel-end-point** command. Output fields are listed in the approximate order in which they appear.

Table 25: show ovsdb virtual-tunnel-end-point Output Fields

Field Name	Field Description
Encapsulation	Encapsulation type of entity.
IP Address	IP address of entity.

Table 25: show ovsdb virtual-tunnel-end-point Output Fields (continued)

Field Name	Field Description
Num of MACs	Number of media access control (MAC) addresses learned by the entity.

Sample Output

show ovsdb virtual-tunnel-end-point

```
user@host> show ovsdb virtual-tunnel-end-point
Encapsulation              Ip Address                        Num of MAC's
VXLAN over IPv4            10.255.181.43                     24
VXLAN over IPv4            10.255.181.50                     12
VXLAN over IPv4            10.255.181.72                     24
```

show ovsdb virtual-tunnel-end-point address (Specific Address)

```
user@host> show ovsdb virtual-tunnel-end-point address 10.255.181.43
Encapsulation              Ip Address                        Num of MAC's
VXLAN over IPv4            10.255.181.43                     24
```

show ovsdb virtual-tunnel-end-point encapsulation (Specific Encapsulation)

```
user@host> show ovsdb virtual-tunnel-end-point encapsulation vxlan-over-ipv4
Encapsulation              Ip Address                        Num of MAC's
VXLAN over IPv4            10.255.181.43                     24
VXLAN over IPv4            10.255.181.50                     12
VXLAN over IPv4            10.255.181.72                     24
```

show ovsdb virtual-tunnel-end-point address (Specific Address) encapsulation (Specific Encapsulation)

```
user@host> show ovsdb virtual-tunnel-end-point address 10.255.181.43 encapsulation
vxlan-over-ipv4
Encapsulation              Ip Address                        Num of MAC's
VXLAN over IPv4            10.255.181.43                     24
```


Copyright © 2018, Juniper Networks, Inc.

show vpls mac-table

Syntax

```
show vpls mac-table
<age>
<brief | detail | extensive | summary>
<bridge-domain bridge-domain-name>
<instance instance-name>
<interface interface-name>
<logical-system (all | logical-system-name)>
<mac-address>
<vlan-id vlan-id-number>
```

Release Information

Command introduced in Junos OS Release 8.5.
Command introduced in Junos OS Release 15.1.

Description

Display learned virtual private LAN service (VPLS) media access control (MAC) address information.

Options

none—Display all learned VPLS MAC address information.

age— (Optional) Display age of a single mac-address.

brief | detail | extensive | summary—(Optional) Display the specified level of output.

bridge-domain *bridge-domain-name*—(Optional) Display learned VPLS MAC addresses for the specified bridge domain.

instance *instance-name*—(Optional) Display learned VPLS MAC addresses for the specified instance.

interface *interface-name*—(Optional) Display learned VPLS MAC addresses for the specified instance.

logical-system (all | *logical-system-name*)—(Optional) Display learned VPLS MAC addresses for all logical systems or for the specified logical system.

mac-address—(Optional) Display the specified learned VPLS MAC address information..

vlan-id *vlan-id-number*—(Optional) Display learned VPLS MAC addresses for the specified VLAN.

Required Privilege Level

view

List of Sample Output

show vpls mac-table on page 151
show vpls mac-table (with Layer 2 Services over GRE Interfaces) on page 151
show vpls mac-table (with VXLAN enabled) on page 151
show vpls mac-table age (for GE interface) on page 152
show vpls mac-table age (for AE interface) on page 152

show vpls mac-table count on page 152
show vpls mac-table detail on page 153
show vpls mac-table extensive on page 153

Output Fields Table 26 on page 150 describes the output fields for the **show vpls mac-table** command. Output fields are listed in the approximate order in which they appear.

Table 26: show vpls mac-table Output fields

Field Name	Field Description
Age	Age of a single mac-address.
Routing instance	Name of the routing instance.
Bridging domain	Name of the bridging domain.
MAC address	MAC address or addresses learned on a logical interface.
MAC flags	Status of MAC address learning properties for each interface: • **S**—Static MAC address configured. • **D**—Dynamic MAC address learned. • **SE**—MAC accounting is enabled. • **NM**—Nonconfigured MAC.
Logical interface	Name of the logical interface.
MAC count	Number of MAC addresses learned on a specific routing instance or interface.
Learning interface	Logical interface or logical Label Switched Interface (LSI) the address is learned on.
Base learning interface	Base learning interface of the MAC address. This field is introduced in Junos OS Release 14.2.
Learn VLAN ID/VLAN	VLAN ID of the routing instance or bridge domain in which the MAC address was learned.
VXLAN ID/VXLAN	VXLAN Network Identifier (VNI)
Layer 2 flags	Debugging flags signifying that the MAC address is present in various lists.
Epoch	Spanning Tree Protocol epoch number identifying when the MAC address was learned. Used for debugging.
Sequence number	Sequence number assigned to this MAC address. Used for debugging.
Learning mask	Mask of Packet Forwarding Engines where this MAC address was learned. Used for debugging.
IPC generation	Creation time of the logical interface when this MAC address was learned. Used for debugging.

 Copyright © 2018, Juniper Networks, Inc.

Sample Output

show vpls mac-table

```
user@host> show vpls mac-table

MAC flags (S -static MAC, D -dynamic MAC,
           SE -Statistics enabled, NM -Non configured MAC)

Routing instance : vpls_ldp1
VLAN : 223
   MAC                 MAC      Logical
   address             flags    interface
   00:00:5e:00:53:5d   D        ge-0/2/5.400

MAC flags (S -static MAC, D -dynamic MAC,
           SE -Statistics enabled, NM -Non configured MAC)

Routing instance : vpls_red
VLAN : 401
   MAC                 MAC      Logical
   address             flags    interface
   00:00:5e:00:53:12   D        lsi.1051138
   00:00:5e:00:53:f0   D        lsi.1051138
```

show vpls mac-table (with Layer 2 Services over GRE Interfaces)

```
user@host> show vpls mac-table

MAC flags (S -static MAC, D -dynamic MAC, L -locally learned
           SE -Statistics enabled, NM -Non configured MAC, R -Remote PE MAC)

Routing instance : vpls_4site:1000
 Bridging domain : __vpls_4site:1000__,   MAC                 MAC      Logical
   address             flags    interface
   00:00:5e:00:53:f4   D,SE     ge-4/2/0.1000
   00:00:5e:00:53:33   D,SE     lsi.1052004
   00:00:5e:00:53:32   D,SE     lsi.1048840
   00:00:5e:00:53:14   D,SE     lsi.1052005
   00:00:5e:00:53:f7   D,SE     gr-1/2/10.10
```

show vpls mac-table (with VXLAN enabled)

```
user@host> show vpls mac-table

MAC flags (S -static MAC, D -dynamic MAC, L -locally learned
           SE -Statistics enabled, NM -Non configured MAC, R -Remote PE MAC)

Routing instance : vpls_4site:1000
 Bridging domain : __vpls_4site:1000__, VLAN : 4094,4093
  VXLAN: Id : 300, Multicast group: 233.252.0.1
   MAC                 MAC      Logical
   address             flags    interface
   00:00:5e:00:53:f4   D,SE     ge-4/2/0.1000
   00:00:5e:00:53:33   D,SE     lsi.1052004
   00:00:5e:00:53:32   D,SE     lsi.1048840
   00:00:5e:00:53:14   D,SE     lsi.1052005
   00:00:5e:00:53:f7   D,SE     vtep.1052010
   00:00:5e:00:53:3f   D,SE     vtep.1052011
```

show vpls mac-table age (for GE interface)

```
user@host> show vpls mac-table age 00:00:5e:00:53:1a instance vpls_instance_1

MAC Entry Age information
Current Age: 4 seconds
```

show vpls mac-table age (for AE interface)

```
user@host> show vpls mac-table age 000:00:5e:00:53:1a instance vpls_instance_1

MAC Entry Age information
Current Age on FPC1: 102 seconds
Current Age on FPC2: 94 seconds
```

show vpls mac-table count

```
user@host> show vpls mac-table count

0 MAC address learned in routing instance __example_private1__

  MAC address count per interface within routing instance:
    Logical interface        MAC count
    lc-0/0/0.32769                   0
    lc-0/1/0.32769                   0
    lc-0/2/0.32769                   0
    lc-2/0/0.32769                   0
    lc-0/3/0.32769                   0
    lc-2/1/0.32769                   0
    lc-9/0/0.32769                   0
    lc-11/0/0.32769                  0
    lc-2/2/0.32769                   0
    lc-9/1/0.32769                   0
    lc-11/1/0.32769                  0
    lc-2/3/0.32769                   0
    lc-9/2/0.32769                   0
    lc-11/2/0.32769                  0
    lc-11/3/0.32769                  0
    lc-9/3/0.32769                   0

  MAC address count per learn VLAN within routing instance:
    Learn VLAN ID            MAC count
                0                    0

1 MAC address learned in routing instance vpls_ldp1

  MAC address count per interface within routing instance:
    Logical interface        MAC count
    lsi.1051137                      0
    ge-0/2/5.400                     1

  MAC address count per learn VLAN within routing instance:
    Learn VLAN ID            MAC count
                0                    1

1 MAC address learned in routing instance vpls_red

  MAC address count per interface within routing instance:
    Logical interface        MAC count
    ge-0/2/5.300                     1
```


Copyright © 2018, Juniper Networks, Inc.

```
  MAC address count per learn VLAN within routing instance:
    Learn VLAN ID            MAC count
                0                    1
```

show vpls mac-table detail

user@host> **show vpls mac-table detail**

```
MAC address: 00:00:5e:00:53:5d
  Routing instance: vpls_ldp1
   Learning interface: ge-0/2/5.400
   Layer 2 flags: in_ifd, in_ifl, in_vlan, kernel
   Epoch: 0                            Sequence number: 1
   Learning mask: 0x1                  IPC generation: 0

MAC address: 00:00:5e:00:53:5d
  Routing instance: vpls_red
   Learning interface: ge-0/2/5.300
   Layer 2 flags: in_ifd, in_ifl, in_vlan, kernel
   Epoch: 0                            Sequence number: 1
   Learning mask: 0x1                  IPC generation: 0
```

show vpls mac-table extensive

user@host> **show vpls mac-table extensive**

```
MAC address: 00:00:5e:00:53:00
  Routing instance: vpls_1
   Bridging domain: __vpls_1__, VLAN : NA
   Learning interface: lsi.1049165
   Base learning interface: lsi.1049165
   Layer 2 flags: in_hash,in_ifd,in_ifl,in_vlan,in_rtt,kernel,in_ifbd
   Epoch: 0                            Sequence number: 1
   Learning mask: 0x00000001

MAC address: 00:00:5e:00:53:01
  Routing instance: vpls_1
   Bridging domain: __vpls_1__, VLAN : NA
   Learning interface: lsi.1049165
   Base learning interface: lsi.1049165
   Layer 2 flags: in_hash,in_ifd,in_ifl,in_vlan,in_rtt,kernel,in_ifbd
   Epoch: 0                            Sequence number: 1
   Learning mask: 0x00000001

MAC address: 00:00:5e:00:53:02
  Routing instance: vpls_1
   Bridging domain: __vpls_1__, VLAN : NA
   Learning interface: lsi.1049165
   Base learning interface: lsi.1049165
   Layer 2 flags: in_hash,in_ifd,in_ifl,in_vlan,in_rtt,kernel,in_ifbd
   Epoch: 0                            Sequence number: 1
   Learning mask: 0x00000001

MAC address: 00:00:5e:00:53:03
  Routing instance: vpls_1
   Bridging domain: __vpls_1__, VLAN : NA
   Learning interface: lsi.1049165
```

```
Base learning interface: lsi.1049165
Layer 2 flags: in_hash,in_ifd,in_ifl,in_vlan,in_rtt,kernel,in_ifbd
Epoch: 0                            Sequence number: 1
Learning mask: 0x00000001
```


Copyright © 2018, Juniper Networks, Inc.

CHAPTER 8

VXLAN Operational Commands

- ping overlay
- show bridge mac-table
- show multicast route
- show pim join
- show vpls mac-table
- traceroute overlay

ping overlay

Syntax

```
ping overlay
<tunnel-type>
vni vni
tunnel-src ip-source-address
tunnel-dst ip-destination-address
<mac mac-address>
<count requests>
<ttl value>
<hash-source-mac source-mac-address>
<hash-destination-mac destination-mac-address>
<hash-source-address source-IP-address>
<hash-destination-address destination-IP-address>
<hash-vlan vlan-id>
<hash-input-interface input-interface>
<hash-protocol protocol-id>
<hash-source-port source-layer4-port>
<hash-destination-port destination-layer4-port>
```

Release Information

Command introduced in Junos OS Release 14.1X53-D30 for QFX Series switches.
Command introduced in Junos OS Release 16.1 for EX Series switches.
Command introduced in Junos OS Release 16.2 for MX Series routers.

Description

Verify the presence of the Virtual Extensible LAN (VXLAN) tunnel endpoints (VTEPs), which can originate and terminate VXLAN tunnels, and service connectivity within the context of the overlay VXLAN segment. Use **ping overlay** as a fault detection tool to determine failure within an overlay VXLAN tunnel. Type **Ctrl+c** to interrupt a **ping overlay** command.

NOTE: The ping overlay command is not supported for IPv6.

Options

tunnel-type—(Optional) Specify the overlay tunnel type used in a virtualized environment such as: VXLAN, Network Virtualization using Generic Routing Encapsulation (NVGRE), MPLS over User Datagram Protocol (UDP), and MPLS over General Routing Encapsulation (GRE) tunnels.

NOTE: Only VXLAN overlay tunnel types are supported.

vni *vni*—Specify the VNI of the VXLAN overlay segment.

tunnel-src *ip-source-address*—Specify the IP address of the source entity at the end of the tunnel, such as the source VTEP.

Copyright © 2018, Juniper Networks, Inc.

tunnel-dst ***ip-destination-address***—Specify the IP address of the destination entity at the end of the tunnel, such as a remote VTEP.

mac ***mac-address***—(Optional) Include the physical or hardware address on the end host system you are trying to reach.

count ***requests***—(Optional) Number of ping requests to send.

For QFX and EX9200 switches, the range of values is **1** through **65,535**. The default value is **10**.

For MX Series routers, the range of values is **1** through **2,000,000,000**. The default value is **5**.

ttl ***value***—(Optional) Time-to-live (TTL) value to include in the ping request.

For QFX and EX9200 switches, the range of values is **1** through **255**. The default value is **255**.

For MX Series routers, the range of values is **0** through **255**. The default value is **255**.

hash-source-mac ***source-mac-address***—(Optional) Specify the MAC address of the source end host system.

NOTE: The hash parameters provide values that correspond to a particular data flow that the **ping overlay** command debugs. Based on the values that you specify, the system calculates a VXLAN UDP header source port hash, which is included in the VXLAN UDP header of the overlay ping and traceroute packets. Including the calculated hash in the VXLAN header enables the overlay ping and traceroute packets to emulate data packets in the flow that you are troubleshooting.

When using the hash parameters, we recommend that you specify a value for each parameter. The exception to this guideline is the hash-vlan parameter, which you do not have to use if the source endpoint is not a member of a VLAN. This practice ensures that the overlay ping and traceroute processes are successful and that the output for each command is accurate. If you do not specify a value for one or more of the hash parameters, the system sends an OAM request that might include incorrect hash values and generates a warning message.

Hash computation supports TCP and UDP protocols only.

hash-destination-mac ***destination-mac-address***—(Optional) Specify the MAC address of the destination end host system.

hash-source-address ***source-IP-address***—(Optional) Specify the IP address of the source end host system.

hash-destination-address ***destination-IP-address***—(Optional) Specify the IP address of the destination end host system.

hash-vlan ***vlan-id***—(Optional, QFX switches only) Specify the VLAN ID of the end host system.

hash-input-interface ***input-interface***—(Optional, QFX switches only) Specify the ingress interface of the flow on the Juniper Networks device.

hash-protocol ***protocol-id***—(Optional) Specify the TCP/UDP IP protocol ID. The range of values is **1** through **255**.

hash-source-port ***source-layer4-port***—(Optional) Specify the Layer 4 source port. The range of values is **1** through **65,535**.

hash-destination-port ***destination-layer4-port***—(Optional) Specify the Layer 4 destination port. The range of values is **1** through **65,535**.

Required Privilege Level

network

Related Documentation

- Understanding Overlay ping and traceroute Packet Support on page 23
- Example: Troubleshooting a VXLAN Overlay Network By Using Overlay Ping and Traceroute on QFX Series Switches on page 91
- **traceroute overlay on page 201**

List of Sample Output

run ping overlay on page 159

Output Fields

When you enter this command, you are provided feedback on the status of your request. An exclamation point (**!**) indicates that an echo reply was received. A period (**.**) indicates that an echo reply was not received within the timeout period. An **x** indicates that an echo reply was received with an error code. These packets are not counted in the received packets count. They are accounted for separately.

Table 27 on page 158 lists the output fields for the **ping overlay** command. Output fields are listed in the approximate order in which they appear.

Table 27: ping overlay Output Fields

Field Name	Field Description
vni	The VNI of the VXLAN overlay segment.
tunnel src ip	The IP address of the source end of the tunnel.
tunnel dst ip	The IP address of the destination end of the tunnel.
mac address	The physical or hardware address on the end host system you are trying to reach.

Copyright © 2018, Juniper Networks, Inc.

Table 27: ping overlay Output Fields (continued)

Field Name	Field Description
count	Number of ping requests sent.
ttl	TTL value for maximum number of pings.
hash-parameters	The hash parameters provide the input-interface, source MAC address, destination MAC address, source IP address, destination IP address, and the VLAN of the two end hosts within an overlay segment. Hash parameters enable platform-specific hash computation to use as the source port in the outer UDP header.
Request/Response for seq *x* to/from *address* at *timestamp*	Number of ping request and response counts for determining overlay segments in tunnel.

Sample Output

run ping overlay

`user@host>` **ping overlay tunnel-type vxlan vni 100 tunnel-src 192.0.2.10 tunnel-dst 192.0.2.20 mac 00:00:5E:00:53:cc count 5 hash-source-mac 00:00:5E:00:53:aa hash-destination-mac 00:00:5E:00:53:cc hash-source-address 198.51.100.1 hash-destination-address 198.51.100.3 hash-vlan 150 hash-input-interface xe-0/0/2 hash-protocol 17 hash-source-port 4456 hash-destination-port 4540**

```
vni 100
        tunnel src ip 192.0.2.10
        tunnel dst ip 192.0.2.20
        mac address 00:00:5E:00:53:cc
        count 5
        ttl 255

        hash-parameters:
                input-ifd-idx 653
                end-host smac 00:00:5E:00:53:aa
                end-host dmac 00:00:5E:00:53:cc
                end-host src ip 198.51.100.1
                end-host dst ip 198.51.100.3
                end-host protocol 17
                end-host l4-src-port 4456
                end-host l4-dst-port 4540
                end-host vlan 150

Request for seq 1, to 192.0.2.20, at 09-24 19:15:33 PDT.352 msecs

Response for seq 1, from 192.0.2.20, at 09-24 19:15:33 PDT.359 msecs, rtt 11 msecs


  Overlay-segment present at RVTEP 192.0.2.20

      End-System Present


Request for seq 2, to 192.0.2.20, at 09-24 19:15:33 PDT.363 msecs
```

```
Response for seq 2, from 192.0.2.20, at 09-24 19:15:33 PDT.370 msecs, rtt 10 msecs

  Overlay-segment present at RVTEP 192.0.2.20

      End-System  Present

Request for seq 3, to 192.0.2.20, at 09-24 19:15:33 PDT.374 msecs

Response for seq 3, from 192.0.2.20, at 09-24 19:15:33 PDT.381 msecs, rtt 10 msecs

  Overlay-segment present at RVTEP 192.0.2.20

      End-System Present

Request for seq 4, to 192.0.2.20, at 09-24 19:15:33 PDT.385 msecs

Response for seq 4, from 192.0.2.20, at 09-24 19:15:33 PDT.392 msecs, rtt 10 msecs

  Overlay-segment present at RVTEP 192.0.2.20

      End-System Present

Request for seq 5, to 192.0.2.20, at 09-24 19:15:33 PDT.396 msecs

Response for seq 5, from 192.0.2.20, at 09-24 19:15:33 PDT.403 msecs, rtt 11 msecs

  Overlay-segment present at RVTEP 192.0.2.20

      End-System Present
```


Copyright © 2018, Juniper Networks, Inc.

show bridge mac-table

Syntax

```
show bridge mac-table
<age>
<brief | count | detail | extensive>
<bridge-domain (all | bridge-domain-name)>
<global-count>
<instance instance-name>
<interface interface-name>
<mac-address>
<instance instance-name>
<vlan-id (all-vlan | vlan-id)>
```

Release Information

Command introduced in Junos OS Release 8.4.
Command introduced in Junos OS Release 15.1
Support for PBB-EVPN instance added in Junos OS Release 16.1
MAC Flag P to indicate a MAC Pinned interface introduced in Junos OS 16.2

Description

(MX Series routers only) Display Layer 2 MAC address information.

Options

none—Display all learned Layer 2 MAC address information.

age— (Optional) Display age of a single mac-address.

brief | count | detail | extensive—(Optional) Display the specified level of output.

bridge-domain (all | *bridge-domain-name*)—(Optional) Display learned Layer 2 MAC addresses for all bridging domains or for the specified bridging domain.

global-count—(Optional) Display the total number of learned Layer 2 MAC addresses on the system.

instance *instance-name*—(Optional) Display learned Layer 2 MAC addresses for the specified routing instance.

interface *interface-name*—(Optional) Display learned Layer 2 MAC addresses for the specified interface.

mac-address—(Optional) Display the specified learned Layer 2 MAC address information.

vlan-id (all-vlan | *vlan-id*)—(Optional) Display learned Layer 2 MAC addresses for all VLANs or for the specified VLAN.

Additional Information

When Layer 2 protocol tunneling is enabled, the tunneling MAC address 01:00:0c:cd:cd:d0 is installed in the MAC table. When the Cisco Discovery Protocol (CDP), Spanning Tree Protocol (STP), or VLAN Trunk Protocol (VTP) is configured for Layer 2 protocol tunneling on an interface, the corresponding protocol MAC address is installed in the MAC table.

Copyright © 2018, Juniper Networks, Inc.

Required Privilege Level view

List of Sample Output

show bridge mac-table on page 163
show bridge mac-table (with Layer 2 Services over GRE Interfaces) on page 163
show bridge mac-table (with VXLAN enabled) on page 164
show bridge mac-table age (for GE interface) on page 164
show bridge mac-table age (for AE interface) on page 164
show bridge mac-table count on page 164
show bridge mac-table detail on page 165
show bridge mac-table instance pbb-evpn on page 165
show bridge mac-table on page 165

Output Fields Table 28 on page 162 describes the output fields for the **show bridge mac-table** command. Output fields are listed in the approximate order in which they appear.

Table 28: show bridge mac-table Output Fields

Field Name	Field Description
Age	Age of a single mac-address.
Routing instance	Name of the routing instance.
Bridging domain	Name of the bridging domain.
MAC address	MAC address or addresses learned on a logical interface.
MAC flags	Status of MAC address learning properties for each interface: • **S**—Static MAC address is configured. • **D**—Dynamic MAC address is configured. • **L**—Locally learned MAC address is configured. • **C**—Control MAC address is configured. • **SE**—MAC accounting is enabled. • **NM**—Non-configured MAC. • **R**—Remote PE MAC address is configured. • **P**—MAC Pinned interface is configured
Logical interface	Name of the logical interface.
MAC count	Number of MAC addresses learned on the specific routing instance or interface.
Learning interface	Name of the logical interface on which the MAC address was learned.
Learning VLAN	VLAN ID of the routing instance or bridge domain in which the MAC address was learned.
VXLAN ID/VXLAN	VXLAN Network Identifier (VNI).

Copyright © 2018, Juniper Networks, Inc.

Table 28: show bridge mac-table Output Fields (continued)

Field Name	Field Description
Layer 2 flags	Debugging flags signifying that the MAC address is present in various lists.
Epoch	Spanning Tree Protocol epoch number identifying when the MAC address was learned. Used for debugging.
Sequence number	Sequence number assigned to this MAC address. Used for debugging.
Learning mask	Mask of the Packet Forwarding Engines where this MAC address was learned. Used for debugging.
IPC generation	Creation time of the logical interface when this MAC address was learned. Used for debugging.

Sample Output

show bridge mac-table

user@host> **show bridge mac-table**

```
MAC flags (S -static MAC, D -dynamic MAC, L -locally learned, C -Control MAC
           SE -Statistics enabled, NM -Non configured MAC, R -Remote PE MAC)

Routing instance : default-switch
 Bridging domain : test1, VLAN : 1
   MAC                 MAC      Logical          NH     RTR
   address             flags    interface        Index  ID
   01:00:0c:cc:cc:cc   S,NM     NULL
   01:00:0c:cc:cc:cd   S,NM     NULL
   01:00:0c:cd:cd:d0   S,NM     NULL
   64:87:88:6a:17:d0   D        ae0.1
   64:87:88:6a:17:f0   D        ae0.1
```

show bridge mac-table (with Layer 2 Services over GRE Interfaces)

user@host> **show bridge mac-table**

```
MAC flags (S -static MAC, D -dynamic MAC, L -locally learned
           SE -Statistics enabled, NM -Non configured MAC, R -Remote PE MAC)

Routing instance : default-switch
 Bridging domain : vlan-1, VLAN : 1
   MAC                 MAC      Logical
   address             flags    interface
   00:01:01:00:01:f7   D,SE     gr-1/2/10.0
   00:03:00:32:01:f7   D,SE     gr-1/2/10.0
   00:00:21:11:11:10   DL       ge-1/0/0.0
   00:00:21:11:11:11   DL       ge-1/1/0.0


Routing instance : default-switch
 Bridging domain : vlan-2, VLAN : 2
   MAC                 MAC      Logical
```

```
  address             flags    interface
  00:02:01:33:01:f7   D,SE     gr-1/2/10.1
  00:00:21:11:21:10   DL       ge-1/0/0.1
  00:00:21:11:21:11   DL       ge-1/1/0.1
```

show bridge mac-table (with VXLAN enabled)

```
user@host> show bridge mac-table
MAC flags (S -static MAC, D -dynamic MAC, L -locally learned
           SE -Statistics enabled, NM -Non configured MAC, R -Remote PE MAC)

Routing instance : default-switch
 Bridging domain : vlan-1, VLAN : 1
  VXLAN: Id : 100, Multicast group: 233.252.0.1
   MAC                 MAC      Logical
   address             flags    interface
   00:01:01:00:01:f7   D,SE     vtep.1052010
   00:03:00:32:01:f7   D,SE     vtep.1052011
   00:00:21:11:11:10   DL       ge-1/0/0.0
   00:00:21:11:11:11   DL       ge-1/1/0.0


Routing instance : default-switch
 Bridging domain : vlan-2, VLAN : 2, VXLAN : 200
  VXLAN: Id : 200, Multicast group: 233.252.0.2
   MAC                 MAC      Logical
   address             flags    interface
   00:02:01:33:01:f7   D,SE     vtep.1052010
   00:04:00:14:01:f7   D,SE     vtep.1052011
   00:00:21:11:21:10   DL       ge-1/0/0.1
   00:00:21:11:21:11   DL       ge-1/1/0.1
```

show bridge mac-table age (for GE interface)

```
user@host> show vpls mac-table age 00:02:03:aa:bb:1a instance vpls_instance_1
MAC Entry Age information
Current Age: 4 seconds
```

show bridge mac-table age (for AE interface)

```
user@host> show vpls mac-table age 00:02:03:aa:bb:1a instance vpls_instance_1
MAC Entry Age information
Current Age on FPC1: 102 seconds
Current Age on FPC2: 94 seconds
```

show bridge mac-table count

```
user@host> show bridge mac-table count
2 MAC address learned in routing instance vs1 bridge domain vlan100

  MAC address count per interface within routing instance:
    Logical interface        MAC count
    ge-11/0/3.0                      1
    ge-11/1/4.100                    0
```


Copyright © 2018, Juniper Networks, Inc.

```
    ge-11/1/1.100                    0
    ge-11/1/0.100                    0
    xe-10/2/0.100                    1
    xe-10/0/0.100                    0

  MAC address count per learn VLAN within routing instance:
    Learn VLAN ID            MAC count
                0                    2

0 MAC address learned in routing instance vs1 bridge domain vlan200

  MAC address count per interface within routing instance:
    Logical interface        MAC count
    ge-11/1/0.200                    0
    ge-11/1/1.200                    0
    ge-11/1/4.200                    0
    xe-10/0/0.200                    0
    xe-10/2/0.200                    0

  MAC address count per learn VLAN within routing instance:
    Learn VLAN ID            MAC count
                0                    0
```

show bridge mac-table detail

user@host> **show bridge mac-table detail**

```
MAC address: 00:00:00:19:1c:db
  Routing instance: vs1
   Bridging domain: vlan100
   Learning interface: ge-11/0/3.0     Learning VLAN: 0
   Layer 2 flags: in_ifd, in_ifl, in_vlan, kernel
   Epoch: 4                            Sequence number: 0
   Learning mask: 0x800                IPC generation: 0

MAC address: 00:00:00:59:3a:2f
  Routing instance: vs1
   Bridging domain: vlan100
   Learning interface: xe-10/2/0.100   Learning VLAN: 0
   Layer 2 flags: in_ifd, in_ifl, in_vlan, kernel
   Epoch: 7                            Sequence number: 0
   Learning mask: 0x400                IPC generation: 0
```

show bridge mac-table instance pbb-evpn

user@host> **show bridge mac-table instance pbb-evpn**

```
Routing instance : pbb-evpn
 Bridging domain : isid-bd10000, ISID : 10000
   MAC                     MAC      Logical          NH     RTR
   address                flags      interface        Index  ID
   00:19:e2:b0:76:eb   D         cbp.1000
   aa:bb:cc:dd:ee:f2   DC                        1048576 1048576
   aa:bb:cc:dd:ee:f3   DC                        1048575 1048575
```

show bridge mac-table

user@host>**run show bridge mac-table**

```
MAC flags (S -static MAC, D -dynamic MAC, L -locally learned, C -Control MAC
O -OVSDB MAC, SE -Statistics enabled, NM -Non configured MAC, R -Remote PE MAC,
P -Pinned MAC)

Routing instance : VS-541
Bridging domain : 541, VLAN : 541
MAC MAC Logical NH RTR
address flags interface Index ID
00:00:01:00:00:01 DPRC xe-0/0/3.0
00:00:02:00:00:01 DP xe-0/0/3.0
```


Copyright © 2018, Juniper Networks, Inc.

show multicast route

List of Syntax

Syntax on page 167
Syntax (EX Series Switch and the QFX Series) on page 167

Syntax

```
show multicast route
<brief | detail | extensive | summary>
<active | all | inactive>
<group group>
<inet | inet6>
<instance instance name>
<logical-system (all | logical-system-name)>
<oif-count>
<regular-expression>
<source-prefix source-prefix>
```

Syntax (EX Series Switch and the QFX Series)

```
show multicast route
<brief | detail | extensive | summary>
<active | all | inactive>
<group group>
<inet | inet6>
<instance instance name>
<regular-expression>
<source-prefix source-prefix>
```

Release Information

Command introduced before Junos OS Release 7.4.
Command introduced in Junos OS Release 9.0 for EX Series switches.
inet6 and **instance** options introduced in Junos OS Release 10.0 for EX Series switches.
Command introduced in Junos OS Release 11.3 for the QFX Series.
Support for bidirectional PIM added in Junos OS Release 12.1.
Command introduced in Junos OS Release 14.1X53-D20 for the OCX Series.
oif-count option introduced in Junos OS Release 16.1 for the MX Series.
xxxSupport for PIM NSR support for VXLAN added in Junos OS Release 16.2.

Description

Display the entries in the IP multicast forwarding table. You can display similar information with the **show route table inet.1** command.

NOTE: On all SRX Series devices, when a multicast route is not available, pending sessions are not torn down, and subsequent packets are queued. If no multicast route resolve comes back, then the traffic flow has to wait for the pending session to timed out. Then packets can trigger new pending session create and route resolve.

Options

none—Display standard information about all entries in the multicast forwarding table for all routing instances.

brief | detail | extensive | summary—(Optional) Display the specified level of output.

active | all | inactive—(Optional) Display all active entries, all entries, or all inactive entries, respectively, in the multicast forwarding table.

group ***group***—(Optional) Display the cache entries for a particular group.

inet | inet6—(Optional) Display multicast forwarding table entries for IPv4 or IPv6 family addresses, respectively.

instance ***instance-name***—(Optional) Display entries in the multicast forwarding table for a specific multicast instance.

logical-system (all | ***logical-system-name*****)**—(Optional) Perform this operation on all logical systems or on a particular logical system.

oif-count —(Optional) Display a count of outgoing interfaces rather than listing them.

regular-expression—(Optional) Display information about the multicast forwarding table entries that match a UNIX OS-style regular expression.

source-prefix ***source-prefix***—(Optional) Display the cache entries for a particular source prefix.

Required Privilege Level

view

Related Documentation

- *Example: Configuring Multicast-Only Fast Reroute in a PIM Domain*

List of Sample Output

show multicast route on page 170
show multicast route (Bidirectional PIM) on page 171
show multicast route brief on page 171
show multicast route summary on page 171
show multicast route detail on page 172
show multicast route extensive (Bidirectional PIM) on page 172
show multicast route extensive (Ingress Router, Multipoint LDP Inband Signaling for Point-to-Multipoint LSPs) on page 173
show multicast route instance <instance-name> extensive on page 174
show multicast route extensive instance <instance-name> on page 175
show multicast route extensive (PIM NSR support for VXLAN on master Routing Engine) on page 176
show multicast route extensive (PIM NSR support for VXLAN on backup Routing Engine) on page 176
show multicast route extensive (PIM NSR support for VXLAN on backup Routing Engine) on page 177

Output Fields

Table 29 on page 169 describes the output fields for the **show multicast route** command. Output fields are listed in the approximate order in which they appear.

Copyright © 2018, Juniper Networks, Inc.

Table 29: show multicast route Output Fields

Field Name	Field Description	Level of Output
family	IPv4 address family (**INET**) or IPv6 address family (**INET6**).	All levels
Group	Group address. For any-source multicast routes, for example for bidirectional PIM, the group address includes the prefix length.	All levels
Source	Prefix and length of the source as it is in the multicast forwarding table.	All levels
Incoming interface list	List of interfaces that accept incoming traffic. Only shown for routes that do not use strict RPF-based forwarding, for example for bidirectional PIM.	All levels
Upstream interface	Name of the interface on which the packet with this source prefix is expected to arrive.	All levels
Upstream rpf interface list	When multicast-only fast reroute (MoFRR) is enabled, a PIM router propagates join messages on two upstream RPF interfaces to receive multicast traffic on both links for the same join request.	All levels
Downstream interface list	List of interface names to which the packet with this source prefix is forwarded. **distributed-gmp**— Added in Junos OS Release 17.4R1 to indicate that line cards with *distributed* IGMP interfaces are receiving multicast traffic for a given (s,g).	All levels
Number of outgoing interfaces	Total number of outgoing interfaces for each (S,G) entry.	**extensive**
Session description	Name of the multicast session.	**detail extensive**
Statistics	Rate at which packets are being forwarded for this source and group entry (in Kbps and pps), and number of packets that have been forwarded to this prefix. If one or more of the kilobits per second packet forwarding statistic queries fails or times out, the statistics field displays **Forwarding statistics are not available**. NOTE: On QFX Series switches and OCX Series switches, this field does not report valid statistics.	**detail extensive**
Next-hop ID	Next-hop identifier of the prefix. The identifier is returned by the routing device's Packet Forwarding Engine and is also displayed in the output of the **show multicast nexthops** command.	**detail extensive**
Incoming interface list ID	For bidirectional PIM, incoming interface list identifier. Identifiers for interfaces that accept incoming traffic. Only shown for routes that do not use strict RPF-based forwarding, for example for bidirectional PIM.	**detail extensive**

Table 29: show multicast route Output Fields (continued)

Field Name	Field Description	Level of Output
Upstream protocol	The protocol that maintains the active multicast forwarding route for this group or source. When the **show multicast route extensive** command is used with the **display-origin-protocol** option, the field name is only **Protocol** and not **Upstream Protocol**. However, this field also displays the protocol that installed the active route.	**detail extensive**
Route type	Type of multicast route. Values can be (S,G) or (*,G).	**summary**
Route state	Whether the group is **Active** or **Inactive**.	**summary extensive**
Route count	Number of multicast routes.	**summary**
Forwarding state	Whether the prefix is pruned or forwarding.	**extensive**
Cache lifetime/timeout	Number of seconds until the prefix is removed from the multicast forwarding table. A value of **never** indicates a permanent forwarding entry. A value of **forever** indicates routes that do not have keepalive times.	**extensive**
Wrong incoming interface notifications	Number of times that the upstream interface was not available.	**extensive**
Uptime	Time since the creation of a multicast route.	**extensive**

Sample Output

Starting in Junos OS Release16.1, **show multicast route** displays the top-level hierarchical next hop.

show multicast route

```
user@host> show multicast route
Family: INET

Group: 233.252.0.0
    Source: 10.255.14.144/32
    Upstream interface: local
    Downstream interface list:
        so-1/0/0.0

Group: 233.252.0.1
    Source: 10.255.14.144/32
    Upstream interface: local
    Downstream interface list:
        so-1/0/0.0

Group: 233.252.0.1
    Source: 10.255.70.15/32
    Upstream interface: so-1/0/0.0
```


Copyright © 2018, Juniper Networks, Inc.

```
    Downstream interface list:
        mt-1/1/0.1081344

Family: INET6
```

show multicast route (Bidirectional PIM)

user@host> **show multicast route**

```
Family: INET

Group: 233.252.0.1/24
    Source: *
    Incoming interface list:
        lo0.0 ge-0/0/1.0
    Downstream interface list:
        ge-0/0/1.0

Group: 233.252.0.3/24
    Source: *
    Incoming interface list:
        lo0.0 ge-0/0/1.0 xe-4/1/0.0
    Downstream interface list:
        ge-0/0/1.0

Group: 233.252.0.11/24
    Source: *
    Incoming interface list:
        lo0.0 ge-0/0/1.0
    Downstream interface list:
        ge-0/0/1.0

Group: 233.252.0.13/24
    Source: *
    Incoming interface list:
        lo0.0 ge-0/0/1.0 xe-4/1/0.0
    Downstream interface list:
        ge-0/0/1.0
Family: INET6
```

show multicast route brief

The output for the **show multicast route brief** command is identical to that for the **show multicast route** command. For sample output, see show multicast route on page 170 or show multicast route (Bidirectional PIM) on page 171.

show multicast route summary

user@host>**show multicast route summary**

```
Instance: master Family: INET

Route type   Route state    Route count
(S,G)             Active             2
(S,G)             Inactive           3

Instance: master Family: INET6
```

show multicast route detail

user@host> **show multicast route detail**

```
Family: INET

Group: 233.252.0.0
    Source: 10.255.14.144/32
    Upstream interface: local
    Downstream interface list:
        so-1/0/0.0
    Session description: Unknown
    Statistics: 8 kBps, 100 pps, 45272 packets
    Next-hop ID: 262142
    Upstream protocol: PIM

Group: 233.252.0.1
    Source: 10.255.14.144/32
    Upstream interface: local
    Downstream interface list:
        so-1/0/0.0
    Session description: Administratively Scoped
    Statistics: 0 kBps, 0 pps, 13404 packets
    Next-hop ID: 262142
    Upstream protocol: PIM

Group: 233.252.0.1
    Source: 10.255.70.15/32
    Upstream interface: so-1/0/0.0
    Downstream interface list:
        mt-1/1/0.1081344
    Session description: Administratively Scoped
    Statistics: 46 kBps, 1000 pps, 921077 packets

    Next-hop ID: 262143
    Upstream protocol: PIM

Family: INET6
```

show multicast route extensive (Bidirectional PIM)

user@host> **show multicast route extensive**

```
Family: INET

Group: 233.252.0.1/24
    Source: *
    Incoming interface list:
        lo0.0 ge-0/0/1.0
    Downstream interface list:
        ge-0/0/1.0
    Number of outgoing interfaces: 1
    Session description: NOB Cross media facilities
    Statistics: 0 kBps, 0 pps, 0 packets
    Next-hop ID: 2097153
    Incoming interface list ID: 585
    Upstream protocol: PIM
    Route state: Active
    Forwarding state: Forwarding
    Cache lifetime/timeout: forever
```


Copyright © 2018, Juniper Networks, Inc.

```
    Wrong incoming interface notifications: 0

Group: 233.252.0.3/24
    Source: *
    Incoming interface list:
        lo0.0 ge-0/0/1.0 xe-4/1/0.0
    Downstream interface list:
        ge-0/0/1.0
    Number of outgoing interfaces: 1
    Session description: NOB Cross media facilities
    Statistics: 0 kBps, 0 pps, 0 packets
    Next-hop ID: 2097153
    Incoming interface list ID: 589
    Upstream protocol: PIM
    Route state: Active
    Forwarding state: Forwarding
    Cache lifetime/timeout: forever
    Wrong incoming interface notifications: 0

Family: INET6
```

show multicast route extensive (Ingress Router, Multipoint LDP Inband Signaling for Point-to-Multipoint LSPs)

```
user@host> show multicast route extensive
 Family: INET

Group: 226.0.0.1
    Source: 200.1.0.2/32
    Upstream interface: xe-3/0/0.0
    Downstream interface list:
        ge-0/1/9.0
    Number of outgoing interfaces: 1
    Session description: Unknown
    Statistics: 78 kBps, 1000 pps, 34789 packets
    Next-hop ID: 1048582
    Upstream protocol: PIM
    Route state: Active
    Forwarding state: Forwarding
    Cache lifetime/timeout: 360 seconds
    Wrong incoming interface notifications: 0
    Uptime: 00:00:35

Group: 226.0.0.2
    Source: 200.1.0.2/32
    Upstream interface: xe-3/0/0.0
    Downstream interface list:
        ge-0/1/9.0
    Number of outgoing interfaces: 1
    Session description: Unknown
    Statistics: 78 kBps, 1000 pps, 34788 packets
    Next-hop ID: 1048583
    Upstream protocol: PIM
    Route state: Active
    Forwarding state: Forwarding
    Cache lifetime/timeout: 360 seconds
    Wrong incoming interface notifications: 0
    Uptime: 00:00:35

Group: 226.0.0.3
```

```
    Source: 200.1.0.2/32
    Upstream interface: xe-3/0/0.0
    Downstream interface list:
        ge-0/1/9.0
    Number of outgoing interfaces: 1
    Session description: Unknown
    Statistics: 78 kBps, 1000 pps, 34786 packets
    Next-hop ID: 1048580
    Upstream protocol: PIM
    Route state: Active
    Forwarding state: Forwarding
    Cache lifetime/timeout: 360 seconds
    Wrong incoming interface notifications: 0
    Uptime: 00:00:35

Group: 226.0.0.4
    Source: 200.1.0.2/32
    Upstream interface: xe-3/0/0.0
    Downstream interface list:
        ge-0/1/9.0
    Number of outgoing interfaces: 1
    Session description: Unknown
    Statistics: 78 kBps, 1000 pps, 34787 packets
    Next-hop ID: 1048581
    Upstream protocol: PIM
    Route state: Active
    Forwarding state: Forwarding
    Cache lifetime/timeout: 360 seconds
    Wrong incoming interface notifications: 0
    Uptime: 00:00:35

Instance: master Family: INET6
```

show multicast route instance <instance-name> extensive

```
user@host> show multicast route instance mvpn extensive
```

```
Family: INET
roup: 233.252.0.10
    Source: 10.0.0.2/32
    Upstream interface: xe-0/0/0.102
    Downstream interface list:
        xe-10/3/0.0 xe-0/3/0.0 xe-0/0/0.106 xe-0/0/0.105
        xe-0/0/0.103 xe-0/0/0.104 xe-0/0/0.107 xe-0/0/0.108
    Session description: Administratively Scoped
    Statistics: 256 kBps, 3998 pps, 670150 packets
    Next-hop ID: 1048579
    Upstream protocol: MVPN
    Route state: Active
    Forwarding state: Forwarding
    Cache lifetime/timeout: forever
    Wrong incoming interface notifications: 58
    Uptime: 00:00:04
```

```
Instance: master Family: INET

Group: 225.0.0.1
    Source: 101.0.0.2/32
    Upstream interface: ge-2/2/0.101
```


Copyright © 2018, Juniper Networks, Inc.

```
    Downstream interface list:
        distributed-gmp
    Number of outgoing interfaces: 1
    Session description: Unknown
    Statistics: 105 kBps, 2500 pps, 4153361 packets
    Next-hop ID: 1048575
    Upstream protocol: PIM
    Route state: Active
    Forwarding state: Forwarding
    Cache lifetime/timeout: 360 seconds
    Wrong incoming interface notifications: 0
    Uptime: 00:31:46

Group: 225.0.0.1
    Source: 101.0.0.3/32
    Upstream interface: ge-2/2/0.101
    Downstream interface list:
        distributed-gmp
    Number of outgoing interfaces: 1
    Session description: Unknown
    Statistics: 105 kBps, 2500 pps, 4153289 packets
    Next-hop ID: 1048575
    Upstream protocol: PIM
    Route state: Active
    Forwarding state: Forwarding
    Cache lifetime/timeout: 360 seconds
    Wrong incoming interface notifications: 0
    Uptime: 00:31:46
```

show multicast route extensive instance <instance-name>

`user@host>` **show multicast route extensive instance VPN-A**

The double asterisks (**) indicate new output, specific to **min-rate** and **revert-delay** settings made under the **[edit routing-instances** *routing-instance-name* protocols mvpn *hot-root-standby*] hierarchy.

```
Instance: VPNA Family: INET

      Group: 227.1.1.1
          Source: 18.1.1.2/32
          Upstream rpf interface list:
              vt-2/0/10.1000 (P)
                Session Id: 0x156 Session Status: Up
                Min-rate: 10000 kbps Weight: 1
                  Sender Id: Label 299808
              vt-2/0/10.1000 (B)
                Session Id: 0x155 Session Status: Up
                Min-rate: 10000 kbps Weight: 65533
                Sender Id: Label 299824
          Downstream interface list:
              lt-2/0/10.0
          Number of outgoing interfaces: 1
          Session description: Unknown
          Statistics: 8258 kBps, 100707 pps, 513032034 packets
          RPF Next-hop ID: 803
          Next-hop ID: 1048580
          Upstream protocol: MVPN
          Route state: Active
```

```
        Forwarding state: Forwarding
        Cache lifetime/timeout: forever
        Wrong incoming interface notifications: 0
        Uptime: 01:24:55
```

show multicast route extensive (PIM NSR support for VXLAN on master Routing Engine)

```
user@host> show multicast route extensive
Instance: master Family: INET

Group: 233.252.0.1
    Source: 10.3.3.3/32
    Upstream interface: ge-3/1/2.0
    Downstream interface list:
        -(593)
    Number of outgoing interfaces: 1
    Session description: Organizational Local Scope
    Statistics: 0 kBps, 0 pps, 27 packets
    Next-hop ID: 1048576
    Upstream protocol: PIM
    Route state: Active
    Forwarding state: Forwarding (Forwarding state is set as 'Forwarding' in
master RE.)
    Cache lifetime/timeout: forever
    Wrong incoming interface notifications: 0
    Uptime: 00:06:38

Group: 233.252.0.1
    Source: 10.2.1.4/32
    Upstream interface: local
    Downstream interface list:
        ge-3/1/2.0
    Number of outgoing interfaces: 1
    Session description: Organizational Local Scope
    Statistics: 0 kBps, 0 pps, 86 packets
    Next-hop ID: 1048575
    Upstream protocol: PIM
    Route state: Active
    Forwarding state: Forwarding (Forwarding state is set as 'Forwarding' in
master RE.)
    Cache lifetime/timeout: forever
    Wrong incoming interface notifications: 0
    Uptime: 00:07:45

Instance: master Family: INET6
```

show multicast route extensive (PIM NSR support for VXLAN on backup Routing Engine)

```
user@host> show multicast route extensive
Instance: master Family: INET

Group: 233.252.0.1
    Source: 10.3.3.3/32
    Upstream interface: ge-3/1/2.0
    Number of outgoing interfaces: 0
    Session description: Organizational Local Scope
```


Copyright © 2018, Juniper Networks, Inc.

```
    Forwarding statistics are not available
    Next-hop ID: 0
    Upstream protocol: PIM
    Route state: Active
    Forwarding state: Pruned (Forwarding state is set as 'Pruned' in backup RE.)

    Cache lifetime/timeout: forever
    Wrong incoming interface notifications: 0
    Uptime: 00:06:46

Group: 233.252.0.1
    Source: 10.2.1.4/32
    Upstream interface: local
    Number of outgoing interfaces: 0
    Session description: Organizational Local Scope
    Forwarding statistics are not available
    Next-hop ID: 0
    Upstream protocol: PIM
    Route state: Active
    Forwarding state: Pruned  (Forwarding state is set as 'Pruned' in backup RE.)

    Cache lifetime/timeout: forever
    Wrong incoming interface notifications: 0
    Uptime: 00:07:54

Instance: master Family: INET6
```

show multicast route extensive (PIM NSR support for VXLAN on backup Routing Engine)

```
user@host> show multicast route extensive
Instance: master Family: INET

Group: 233.252.0.1
    Source: 10.3.3.3/32
    Upstream interface: ge-3/1/2.0
    Downstream interface list:
        -(593)
    Number of outgoing interfaces: 1
    Session description: Organisational Local Scope
    Statistics: 0 kBps, 0 pps, 0 packets
    Next-hop ID: 1048576
    Upstream protocol: PIM
    Route state: Active
    Forwarding state: Forwarding (Forwarding state is set as 'Forwarding' in
backup RE.)
    Cache lifetime/timeout: forever
    Wrong incoming interface notifications: 0
    Uptime: 00:06:38

Group: 233.252.0.1
    Source: 10.2.1.4/32
    Upstream interface: local
    Downstream interface list:
        ge-3/1/2.0
    Number of outgoing interfaces: 1
    Session description: Organisational Local Scope
    Statistics: 0 kBps, 0 pps, 0 packets
    Next-hop ID: 1048575
    Upstream protocol: PIM
```

```
    Route state: Active
    Forwarding state: Forwarding (Forwarding state is set as 'Forwarding' in
backup RE.)
    Cache lifetime/timeout: forever
    Wrong incoming interface notifications: 0
    Uptime: 00:07:45

Instance: master Family: INET6
```


Copyright © 2018, Juniper Networks, Inc.

show pim join

List of Syntax

Syntax on page 179
Syntax (EX Series Switch and the QFX Series) on page 179

Syntax

```
show pim join
<brief | detail | extensive | summary>
<bidirectional | dense | sparse>
<downstream-count>
<exact>
<inet | inet6>
<instance instance-name>
<logical-system (all | logical-system-name)>
<range>
<rp ip-address/prefix | source ip-address/prefix>
<sg | star-g>
```

Syntax (EX Series Switch and the QFX Series)

```
show pim join
<brief | detail | extensive | summary>
<dense | sparse>
<exact>
<inet | inet6>
<instance instance-name>
<range>
<rp ip-address/prefix | source ip-address/prefix>
<sg | star-g>
```

Release Information

Command introduced before Junos OS Release 7.4.
Command introduced in Junos OS Release 9.0 for EX Series switches.
summary option introduced in Junos OS Release 9.6.
inet6 and **instance** options introduced in Junos OS Release 10.0 for EX Series switches.
Support for bidirectional PIM added in Junos OS Release 12.1.
Command introduced in Junos OS Release 11.3 for the QFX Series.
Multiple new filter options introduced in Junos OS Release 13.2.
Command introduced in Junos OS Release 14.1X53-D20 for the OCX Series.
downstream-count option introduced in Junos OS Release 16.1.
Support for PIM NSR support for VXLAN added in Junos OS Release 16.2
Support for RFC 5496 (via **rpf-vector**) added in Junos OS Release 17.3R1.

Description

Display information about Protocol Independent Multicast (PIM) groups for all PIM modes.

For bidirectional PIM, display information about PIM group ranges (*,G-range) for each active bidirectional RP group range, in addition to each of the joined (*,G) routes.

Options

none—Display the standard information about PIM groups for all supported family addresses for all routing instances.

brief | detail | extensive | summary—(Optional) Display the specified level of output.

bidirectional | dense | sparse—(Optional) Display information about PIM bidirectional mode, dense mode, or sparse and source-specific multicast (SSM) mode entries.

downstream-count—(Optional) Display the downstream count instead of a list.

exact—(Optional) Display information about only the group that exactly matches the specified group address.

inet | inet6—(Optional) Display PIM group information for IPv4 or IPv6 family addresses, respectively.

instance ***instance-name***—(Optional) Display information about groups for the specified PIM-enabled routing instance only.

logical-system (all | ***logical-system-name*****)**—(Optional) Perform this operation on all logical systems or on a particular logical system.

range—(Optional) Address range of the group, specified as ***prefix/prefix-length***.

rp ***ip-address/prefix*** **| source** ***ip-address/prefix***—(Optional) Display information about the PIM entries with a specified rendezvous point (RP) address and prefix or with a specified source address and prefix. You can omit the prefix.

sg | star-g—(Optional) Display information about PIM (S,G) or (*,G) entries.

Required Privilege Level

view

Related Documentation

- *clear pim join*
- *Example: Configuring Multicast-Only Fast Reroute in a PIM Domain*
- *Example: Configuring Bidirectional PIM*
- *Example: Configuring PIM State Limits*

List of Sample Output

show pim join summary on page 184
show pim join (PIM Sparse Mode) on page 184
show pim join (Bidirectional PIM) on page 184
show pim join inet6 on page 185
show pim join inet6 star-g on page 186
show pim join instance <instance-name> on page 186
show pim join instance <instance-name> downstream-count on page 186
show pim join instance <instance-name> downstream-count extensive on page 187
show pim join detail on page 187
show pim join extensive (PIM Resolve TLV for Multicast in Seamless MPLS) on page 187
show pim join extensive (PIM Sparse Mode) on page 188
show pim join extensive (Bidirectional PIM) on page 189

Copyright © 2018, Juniper Networks, Inc.

show pim join extensive (Bidirectional PIM with a Directly Connected Phantom RP) on page 190
show pim join instance <instance-name> extensive on page 190
show pim join extensive (Ingress Node with Multipoint LDP Inband Signaling for Point-to-Multipoint LSPs) on page 191
show pim join extensive (Egress Node with Multipoint LDP Inband Signaling for Point-to-Multipoint LSPs) on page 192

Output Fields Table 30 on page 181 describes the output fields for the **show pim join** command. Output fields are listed in the approximate order in which they appear.

Table 30: show pim join Output Fields

Field Name	Field Description	Level of Output
Instance	Name of the routing instance.	**brief detail extensive summary** none
Family	Name of the address family: **inet** (IPv4) or **inet6** (IPv6).	**brief detail extensive summary** none
Route type	Type of multicast route: (S,G) or (*,G).	**summary**
Route count	Number of (S,G) routes and number of (*,G) routes.	**summary**
R	Rendezvous Point Tree.	**brief detail extensive** none
S	Sparse.	**brief detail extensive** none
W	Wildcard.	**brief detail extensive** none
Group	Group address.	**brief detail extensive** none
Bidirectional group prefix length	For bidirectional PIM, length of the IP prefix for RP group ranges.	All levels
Source	Multicast source: • * (wildcard value) • *ipv4-address* • *ipv6-address*	**brief detail extensive** none
RP	Rendezvous point for the PIM group.	**brief detail extensive** none
Flags	PIM flags: • **bidirectional**—Bidirectional mode entry. • **dense**—Dense mode entry. • **rptree**—Entry is on the rendezvous point tree. • **sparse**—Sparse mode entry. • **spt**—Entry is on the shortest-path tree for the source. • **wildcard**—Entry is on the shared tree.	**brief detail extensive** none

Table 30: show pim join Output Fields (continued)

Field Name	Field Description	Level of Output
Upstream interface	RPF interface toward the source address for the source-specific state (S,G) or toward the rendezvous point (RP) address for the non-source-specific state (*,G). For bidirectional PIM, **RP Link** means that the interface is directly connected to a subnet that contains a phantom RP address. A pseudo multipoint LDP (M-LDP) interface appears on egress nodes in M-LDP point-to-multipoint LSPs with inband signaling.	**brief detail extensive** none
Upstream neighbor	Information about the upstream neighbor: **Direct**, **Local**, **Unknown**, or a specific IP address. For bidirectional PIM, **Direct** means that the interface is directly connected to a subnet that contains a phantom RP address. The multipoint LDP (M-LDP) root appears on egress nodes in M-LDP point-to-multipoint LSPs with inband signaling.	**extensive**
Upstream rpf-vector	Information about the upstream Reverse Path Forwarding (RPF) vector; appears in conjunction with the **rpf-vector** command.	**extensive**
Active upstream interface	When multicast-only fast reroute (MoFRR) is configured in a PIM domain, the upstream interface for the active path. A PIM router propagates join messages on two upstream RPF interfaces to receive multicast traffic on both links for the same join request. Preference is given to two paths that do not converge to the same immediate upstream router. PIM installs appropriate multicast routes with upstream neighbors as RPF next hops with two (primary and backup) interfaces.	**extensive**
Active upstream neighbor	On the MoFRR primary path, the IP address of the neighbor that is directly connected to the active upstream interface.	**extensive**
MoFRR Backup upstream interface	The MoFRR upstream interface that is used when the primary path fails. When the primary path fails, the backup path is upgraded to primary, and traffic is forwarded accordingly. If there are alternate paths available, a new backup path is calculated and the appropriate multicast route is updated or installed.	**extensive**
MoFRR Backup upstream neighbor	IP address of the MoFRR upstream neighbor.	extensive

Copyright © 2018, Juniper Networks, Inc.

Table 30: show pim join Output Fields (continued)

Field Name	Field Description	Level of Output
Upstream state	Information about the upstream interface: • **Join to RP**—Sending a join to the rendezvous point. • **Join to Source**—Sending a join to the source. • **Local RP**—Sending neither join messages nor prune messages toward the RP, because this routing device is the rendezvous point. • **Local Source**—Sending neither join messages nor prune messages toward the source, because the source is locally attached to this routing device. • **No Prune to RP**—Automatically sent to RP when SPT and RPT are on the same path. • **Prune to RP**—Sending a prune to the rendezvous point. • **Prune to Source**—Sending a prune to the source. NOTE: RP group range entries have **None** in the **Upstream state** field because RP group ranges do not trigger actual PIM join messages between routing devices.	**extensive**
Downstream neighbors	Information about downstream interfaces: • **Interface**—Interface name for the downstream neighbor. A pseudo PIM-SM interface appears for all IGMP-only interfaces. A pseudo multipoint LDP (Pseudo-MLDP) interface appears on ingress root nodes in M-LDP point-to-multipoint LSPs with inband signaling. • **Interface address**—Address of the downstream neighbor. • **State**—Information about the downstream neighbor: **join** or **prune**. • **Flags**—PIM join flags: **R (RPtree)**, **S (Sparse)**, **W (Wildcard)**, or **zero**. • **Uptime**—Time since the downstream interface joined the group. • **Time since last Join**—Time since the last join message was received from the downstream interface. • **Time since last Prune**—Time since the last prune message was received from the downstream interface. • **rpf-vector**—IP address of the RPF vector TLV .	**extensive**
Number of downstream interfaces	Total number of outgoing interfaces for each (S,G) entry.	**extensive**
Assert Timeout	Length of time between assert cycles on the downstream interface. Not displayed if the assert timer is null.	**extensive**
Keepalive timeout	Time remaining until the downstream join state is updated (in seconds). If the downstream join state is not updated before this keepalive timer reaches zero, the entry is deleted. If there is a directly connected host, **Keepalive timeout** is **Infinity**.	**extensive**
Uptime	Time since the creation of (S,G) or (*,G) state. The uptime is not refreshed every time a PIM join message is received for an existing (S,G) or (*,G) state.	**extensive**

Table 30: show pim join Output Fields (continued)

Field Name	Field Description	Level of Output
Bidirectional accepting interfaces	Interfaces on the routing device that forward bidirectional PIM traffic. The reasons for forwarding bidirectional PIM traffic are that the interface is the winner of the designated forwarder election (**DF Winner**), or the interface is the reverse path forwarding (RPF) interface toward the RP (**RPF**).	**extensive**

Sample Output

show pim join summary

```
user@host> show pim join summary
Instance: PIM.master Family: INET

Route type            Route count
(s,g)                 2
(*,g)                 1

Instance: PIM.master Family: INET6
```

show pim join (PIM Sparse Mode)

```
user@host> show pim join
Instance: PIM.master Family: INET
R = Rendezvous Point Tree, S = Sparse, W = Wildcard

Group: 233.252.0.1
    Source: *
    RP: 10.255.14.144
    Flags: sparse,rptree,wildcard
    Upstream interface: Local

Group: 233.252.0.1
    Source: 10.255.14.144
    Flags: sparse,spt
    Upstream interface: Local

Group: 233.252.0.1
    Source: 10.255.70.15
    Flags: sparse,spt
    Upstream interface: so-1/0/0.0

Instance: PIM.master Family: INET6
R = Rendezvous Point Tree, S = Sparse, W = Wildcard
```

show pim join (Bidirectional PIM)

```
user@host> show pim join
Instance: PIM.master Family: INET
R = Rendezvous Point Tree, S = Sparse, W = Wildcard
```


Copyright © 2018, Juniper Networks, Inc.

```
Group: 233.252.0.1
    Bidirectional group prefix length: 24
    Source: *
    RP: 10.10.13.2
    Flags: bidirectional,rptree,wildcard
    Upstream interface: ge-0/0/1.0

Group: 233.252.0.2
    Bidirectional group prefix length: 24
    Source: *
    RP: 10.10.1.3
    Flags: bidirectional,rptree,wildcard
    Upstream interface: ge-0/0/1.0 (RP Link)

Group: 233.252.0.3
    Bidirectional group prefix length: 24
    Source: *
    RP: 10.10.13.2
    Flags: bidirectional,rptree,wildcard
    Upstream interface: ge-0/0/1.0

Group: 233.252.0.4
    Bidirectional group prefix length: 24
    Source: *
    RP: 10.10.1.3
    Flags: bidirectional,rptree,wildcard
    Upstream interface: ge-0/0/1.0 (RP Link)

Instance: PIM.master Family: INET6
R = Rendezvous Point Tree, S = Sparse, W = Wildcard
```

show pim join inet6

user@host> **show pim join inet6**

```
Instance: PIM.master Family: INET6
 R = Rendezvous Point Tree, S = Sparse, W = Wildcard

 Group: 2001:db8::e000:101
     Source: *
     RP: ::46.0.0.13
     Flags: sparse,rptree,wildcard
     Upstream interface: Local

 Group: 2001:db8::e000:101
     Source: ::1.1.1.1
     Flags: sparse
     Upstream interface: unknown (no neighbor)

 Group: 2001:db8::e800:101
     Source: ::1.1.1.1
     Flags: sparse
     Upstream interface: unknown (no neighbor)

 Group: 2001:db8::e800:101
     Source: ::1.1.1.2
     Flags: sparse
     Upstream interface: unknown (no neighbor)
```

show pim join inet6 star-g

```
user@host> show pim join inet6 star-g
Instance: PIM.master Family: INET6
 R = Rendezvous Point Tree, S = Sparse, W = Wildcard

 Group: 2001:db8::e000:101
     Source: *
     RP: ::46.0.0.13
     Flags: sparse,rptree,wildcard
     Upstream interface: Local
```

show pim join instance <instance-name>

```
user@host> show pim join instance VPN-A
Instance: PIM.VPN-A Family: INET
R = Rendezvous Point Tree, S = Sparse, W = Wildcard

Group: 233.252.0.2
    Source: *
    RP: 10.10.47.100
    Flags: sparse,rptree,wildcard
    Upstream interface: Local

Group: 233.252.0.2
    Source: 192.168.195.74
    Flags: sparse,spt
    Upstream interface: at-0/3/1.0

Group: 233.252.0.2
    Source: 192.168.195.169
    Flags: sparse
    Upstream interface: so-1/0/1.0

Instance: PIM.VPN-A Family: INET6
R = Rendezvous Point Tree, S = Sparse, W = Wildcard
```

show pim join instance <instance-name> downstream-count

```
user@host> show pim join instance VPN-A downstream-count
Instance: PIM.SML_VRF_4 Family: INET
R = Rendezvous Point Tree, S = Sparse, W = Wildcard

Group: 233.252.0.1
    Source: *
    RP: 10.11.11.6
    Flags: sparse,rptree,wildcard
    Upstream interface: mt-1/2/10.32813
    Number of downstream interfaces: 4

Group: 233.252.0.1
    Source: 10.1.1.1
    Flags: sparse,spt
    Upstream interface: ge-0/0/3.5
    Number of downstream interfaces: 5
```


Copyright © 2018, Juniper Networks, Inc.

show pim join instance <instance-name> downstream-count extensive

user@host> **show pim join instance VPN-A downstream-count extensive**

```
Instance: PIM.SML_VRF_4 Family: INET
R = Rendezvous Point Tree, S = Sparse, W = Wildcard

Group: 233.252.0.1
    Source: *
    RP: 10.11.11.6
    Flags: sparse,rptree,wildcard
    Upstream interface: mt-1/2/10.32813
    Upstream neighbor: 10.2.2.7 (assert winner)
    Upstream state: Join to RP
    Uptime: 02:51:41
    Number of downstream interfaces: 4
    Number of downstream neighbors: 4

Group: 233.252.0.1
    Source: 10.1.1.1
    Flags: sparse,spt
    Upstream interface: ge-0/0/3.5
    Upstream neighbor: 10.1.1.17
    Upstream state: Join to Source, Prune to RP
    Keepalive timeout: 0
    Uptime: 02:51:42
    Number of downstream interfaces: 5
    Number of downstream neighbors: 7
```

show pim join detail

user@host> **show pim join detail**

```
Instance: PIM.master Family: INET
R = Rendezvous Point Tree, S = Sparse, W = Wildcard

Group: 233.252.0.1
    Source: *
    RP: 10.255.14.144
    Flags: sparse,rptree,wildcard
    Upstream interface: Local

Group: 233.252.0.1
    Source: 10.255.14.144
    Flags: sparse,spt
    Upstream interface: Local

Group: 233.252.0.1
    Source: 10.255.70.15
    Flags: sparse,spt
    Upstream interface: so-1/0/0.0

Instance: PIM.master Family: INET6
R = Rendezvous Point Tree, S = Sparse, W = Wildcard
```

show pim join extensive (PIM Resolve TLV for Multicast in Seamless MPLS)

user@host> **show pim join extensive**

```
Group: 228.26.1.5
    Source: 60.0.0.101
    Flags: sparse,spt
    Upstream interface: ge-5/0/0.1
    Upstream neighbor: 10.100.1.13
    Upstream state: Join to Source
Upstream rpf-vector: 10.100.20.1
    Keepalive timeout: 178
    Uptime: 17:44:38
    Downstream neighbors:
        Interface: xe-2/0/3.1
            203.21.2.190 State: Join Flags: S Timeout: 156
            Uptime: 17:44:38 Time since last Join: 00:00:54
            rpf-vector: 10.100.20.1
        Interface: xe-2/0/2.1
            203.21.1.190 State: Join Flags: S Timeout: 156
            Uptime: 17:44:38 Time since last Join: 00:00:54
            rpf-vector: 10.100.20.2
    Number of downstream interfaces: 2
    Number of downstream neighbors: 2
```

show pim join extensive (PIM Sparse Mode)

```
user@host> show pim join extensive
```

```
Instance: PIM.master Family: INET
R = Rendezvous Point Tree, S = Sparse, W = Wildcard

Group: 233.252.0.1
    Source: *
    RP: 10.255.14.144
    Flags: sparse,rptree,wildcard
    Upstream interface: Local
    Upstream neighbor: Local
    Upstream state: Local RP
    Uptime: 00:03:49
    Downstream neighbors:
        Interface: so-1/0/0.0
            10.111.10.2 State: Join Flags: SRW Timeout: 174
            Uptime: 00:03:49 Time since last Join: 00:01:49
        Interface: mt-1/1/0.32768
            10.10.47.100 State: Join Flags: SRW  Timeout: Infinity
            Uptime: 00:03:49 Time since last Join: 00:01:49
    Number of downstream interfaces: 2

Group: 233.252.0.1
    Source: 10.255.14.144
    Flags: sparse,spt
    Upstream interface: Local
    Upstream neighbor: Local
    Upstream state: Local Source, Local RP
    Keepalive timeout: 344
    Uptime: 00:03:49
    Downstream neighbors:
        Interface: so-1/0/0.0
            10.111.10.2 State: Join Flags: S Timeout: 174
            Uptime: 00:03:49 Time since last Prune: 00:01:49
        Interface: mt-1/1/0.32768
            10.10.47.100 State: Join Flags: S   Timeout: Infinity
            Uptime: 00:03:49 Time since last Prune: 00:01:49
```


Copyright © 2018, Juniper Networks, Inc.

```
    Number of downstream interfaces: 2

Group: 233.252.0.1
    Source: 10.255.70.15
    Flags: sparse,spt
    Upstream interface: so-1/0/0.0
    Upstream neighbor: 10.111.10.2
    Upstream state: Local RP, Join to Source
    Keepalive timeout: 344
    Uptime: 00:03:49
    Downstream neighbors:
        Interface: Pseudo-GMP
            fe-0/0/0.0 fe-0/0/1.0 fe-0/0/3.0
        Interface: so-1/0/0.0 (pruned)
            10.111.10.2 State: Prune Flags: SR Timeout: 174
            Uptime: 00:03:49 Time since last Prune: 00:01:49
        Interface: mt-1/1/0.32768
            10.10.47.100 State: Join Flags: S   Timeout: Infinity
            Uptime: 00:03:49 Time since last Prune: 00:01:49
    Number of downstream interfaces: 3

Instance: PIM.master Family: INET6
R = Rendezvous Point Tree, S = Sparse, W = Wildcard
```

show pim join extensive (Bidirectional PIM)

```
user@host> show pim join extensive
Instance: PIM.master Family: INET
R = Rendezvous Point Tree, S = Sparse, W = Wildcard

Group: 233.252.0.0
    Bidirectional group prefix length: 24
    Source: *
    RP: 10.10.13.2
    Flags: bidirectional,rptree,wildcard
    Upstream interface: ge-0/0/1.0
    Upstream neighbor: 10.10.1.2
    Upstream state: None
    Uptime: 00:03:49
    Bidirectional accepting interfaces:
        Interface: ge-0/0/1.0    (RPF)
        Interface: lo0.0         (DF Winner)
    Number of downstream interfaces: 0

Group: 233.252.0.1
    Bidirectional group prefix length: 24
    Source: *
    RP: 10.10.13.2
    Flags: bidirectional,rptree,wildcard
    Upstream interface: ge-0/0/1.0
    Upstream neighbor: 10.10.1.2
    Upstream state: None
    Uptime: 00:03:49
    Bidirectional accepting interfaces:
        Interface: ge-0/0/1.0    (RPF)
        Interface: lo0.0         (DF Winner)
     Downstream neighbors:
         Interface: lt-1/0/10.24
             10.0.24.4 State: Join   RW  Timeout: 185
```

```
        Interface: lt-1/0/10.23
            10.0.23.3 State: Join   RW  Timeout: 184
     Number of downstream interfaces: 2

Group: 233.252.0.2
    Bidirectional group prefix length: 24
    Source: *
    RP: 10.10.1.3
    Flags: bidirectional,rptree,wildcard
    Upstream interface: ge-0/0/1.0 (RP Link)
    Upstream neighbor: Direct
    Upstream state: Local RP
    Uptime: 00:03:49
    Bidirectional accepting interfaces:
        Interface: ge-0/0/1.0    (RPF)
        Interface: lo0.0         (DF Winner)
        Interface: xe-4/1/0.0    (DF Winner)
    Number of downstream interfaces: 0

Instance: PIM.master Family: INET6
R = Rendezvous Point Tree, S = Sparse, W = Wildcard
```

show pim join extensive (Bidirectional PIM with a Directly Connected Phantom RP)

user@host> **show pim join extensive**

```
Instance: PIM.master Family: INET
R = Rendezvous Point Tree, S = Sparse, W = Wildcard

Group: 233.252.0.0
    Bidirectional group prefix length: 24
    Source: *
    RP: 10.10.1.3
    Flags: bidirectional,rptree,wildcard
    Upstream interface: ge-0/0/1.0 (RP Link)
    Upstream neighbor: Direct
    Upstream state: Local RP
    Uptime: 00:03:49
    Bidirectional accepting interfaces:
        Interface: ge-0/0/1.0    (RPF)
        Interface: lo0.0         (DF Winner)
        Interface: xe-4/1/0.0    (DF Winner)
    Number of downstream interfaces: 0
```

show pim join instance <instance-name> extensive

user@host> **show pim join instance VPN-A extensive**

```
Instance: PIM.VPN-A Family: INET
R = Rendezvous Point Tree, S = Sparse, W = Wildcard

Group: 233.252.0.2
    Source: *
    RP: 10.10.47.100
    Flags: sparse,rptree,wildcard
    Upstream interface: Local
    Upstream neighbor: Local
    Upstream state: Local RP
    Uptime: 00:03:49
```


Copyright © 2018, Juniper Networks, Inc.

```
    Downstream neighbors:
        Interface: mt-1/1/0.32768
            10.10.47.101 State: Join Flags: SRW Timeout: 156
            Uptime: 00:03:49 Time since last Join: 00:01:49
    Number of downstream interfaces: 1

Group: 233.252.0.2
    Source: 192.168.195.74
    Flags: sparse,spt
    Upstream interface: at-0/3/1.0
    Upstream neighbor: 10.111.30.2
    Upstream state: Local RP, Join to Source
    Keepalive timeout: 156
    Uptime: 00:14:52

Group: 233.252.0.2
    Source: 192.168.195.169
    Flags: sparse
    Upstream interface: so-1/0/1.0
    Upstream neighbor: 10.111.20.2
    Upstream state: Local RP, Join to Source
    Keepalive timeout: 156
    Uptime: 00:14:52
```

show pim join extensive (Ingress Node with Multipoint LDP Inband Signaling for Point-to-Multipoint LSPs)

```
user@host> show pim join extensive
Instance: PIM.master Family: INET
R = Rendezvous Point Tree, S = Sparse, W = Wildcard

Group: 233.252.0.1
    Source: 192.168.219.11
    Flags: sparse,spt
    Upstream interface: fe-1/3/1.0
    Upstream neighbor: Direct
    Upstream state: Local Source
    Keepalive timeout:
    Uptime: 11:27:55
    Downstream neighbors:
        Interface: Pseudo-MLDP
        Interface: lt-1/2/0.25
            10.2.5.2 State: Join Flags: S   Timeout: Infinity
            Uptime: 11:27:55 Time since last Join: 11:27:55

Group: 233.252.0.2
    Source: 192.168.219.11
    Flags: sparse,spt
    Upstream interface: fe-1/3/1.0
    Upstream neighbor: Direct
    Upstream state: Local Source
    Keepalive timeout:
    Uptime: 11:27:41
    Downstream neighbors:
        Interface: Pseudo-MLDP

Group: 233.252.0.3
    Source: 192.168.219.11
    Flags: sparse,spt
    Upstream interface: fe-1/3/1.0
```

```
    Upstream neighbor: Direct
    Upstream state: Local Source
    Keepalive timeout:
    Uptime: 11:27:41
    Downstream neighbors:
        Interface: Pseudo-MLDP

Group: 233.252.0.22
    Source: 10.2.7.7
    Flags: sparse,spt
    Upstream interface: lt-1/2/0.27
    Upstream neighbor: Direct
    Upstream state: Local Source
    Keepalive timeout:
    Uptime: 11:27:25
    Downstream neighbors:
        Interface: Pseudo-MLDP

Instance: PIM.master Family: INET6
R = Rendezvous Point Tree, S = Sparse, W = Wildcard

Group: 2001:db8::1:2
    Source: 2001:db8::1:2:7:7
    Flags: sparse,spt
    Upstream interface: lt-1/2/0.27
    Upstream neighbor: Direct
    Upstream state: Local Source
    Keepalive timeout:
    Uptime: 11:27:26
    Downstream neighbors:
        Interface: Pseudo-MLDP
```

show pim join extensive (Egress Node with Multipoint LDP Inband Signaling for Point-to-Multipoint LSPs)

```
user@host> show pim join extensive
Instance: PIM.master Family: INET
R = Rendezvous Point Tree, S = Sparse, W = Wildcard

Group: 233.252.0.0
    Source: *
    RP: 10.1.1.1
    Flags: sparse,rptree,wildcard
    Upstream interface: Local
    Upstream neighbor: Local
    Upstream state: Local RP
    Uptime: 11:31:33
    Downstream neighbors:
        Interface: fe-1/3/0.0
            192.168.209.9 State: Join Flags: SRW  Timeout: Infinity
            Uptime: 11:31:33 Time since last Join: 11:31:32

Group: 233.252.0.1
    Source: 192.168.219.11
    Flags: sparse,spt
    Upstream protocol: MLDP
    Upstream interface: Pseudo MLDP
    Upstream neighbor: MLDP LSP root <10.1.1.2>
    Upstream state: Join to Source
    Keepalive timeout:
```


Copyright © 2018, Juniper Networks, Inc.

```
    Uptime: 11:31:32
    Downstream neighbors:
        Interface: so-0/1/3.0
            192.168.92.9 State: Join Flags: S   Timeout: Infinity
            Uptime: 11:31:30 Time since last Join: 11:31:30
    Downstream neighbors:
        Interface: fe-1/3/0.0
            192.168.209.9 State: Join Flags: S   Timeout: Infinity
            Uptime: 11:31:32 Time since last Join: 11:31:32

Group: 233.252.0.2
    Source: 192.168.219.11
    Flags: sparse,spt
    Upstream protocol: MLDP
    Upstream interface: Pseudo MLDP
    Upstream neighbor: MLDP LSP root <10.1.1.2>
    Upstream state: Join to Source
    Keepalive timeout:
    Uptime: 11:31:32
    Downstream neighbors:
        Interface: so-0/1/3.0
            192.168.92.9 State: Join Flags: S   Timeout: Infinity
            Uptime: 11:31:30 Time since last Join: 11:31:30
    Downstream neighbors:
        Interface: lt-1/2/0.14
            10.1.4.4 State: Join Flags: S Timeout: 177
            Uptime: 11:30:33 Time since last Join: 00:00:33
    Downstream neighbors:
        Interface: fe-1/3/0.0
            192.168.209.9 State: Join Flags: S   Timeout: Infinity
            Uptime: 11:31:32 Time since last Join: 11:31:32

Group: 233.252.0.3
    Source: 192.168.219.11
    Flags: sparse,spt
    Upstream protocol: MLDP
    Upstream interface: Pseudo MLDP
    Upstream neighbor: MLDP LSP root <10.1.1.2>
    Upstream state: Join to Source
    Keepalive timeout:
    Uptime: 11:31:32
    Downstream neighbors:
        Interface: fe-1/3/0.0
            192.168.209.9 State: Join Flags: S   Timeout: Infinity
            Uptime: 11:31:32 Time since last Join: 11:31:32

Group: 233.252.0.22
    Source: 10.2.7.7
    Flags: sparse,spt
    Upstream protocol: MLDP
    Upstream interface: Pseudo MLDP
    Upstream neighbor: MLDP LSP root <10.1.1.2>
    Upstream state: Join to Source
    Keepalive timeout:
    Uptime: 11:31:30
    Downstream neighbors:
        Interface: so-0/1/3.0
            192.168.92.9 State: Join Flags: S   Timeout: Infinity
            Uptime: 11:31:30 Time since last Join: 11:31:30
```

```
Instance: PIM.master Family: INET6
R = Rendezvous Point Tree, S = Sparse, W = Wildcard

Group: 2001:db8::1:2
    Source: 2001:db8::1:2:7:7
    Flags: sparse,spt
    Upstream protocol: MLDP
    Upstream interface: Pseudo MLDP
    Upstream neighbor: MLDP LSP root <10.1.1.2>
    Upstream state: Join to Source
    Keepalive timeout:
    Uptime: 11:31:32
    Downstream neighbors:
        Interface: fe-1/3/0.0
           2001:db8::21f:12ff:fea5:c4db State: Join Flags: S   Timeout: Infinity

            Uptime: 11:31:32 Time since last Join: 11:31:32
```


Copyright © 2018, Juniper Networks, Inc.

show vpls mac-table

Syntax

```
show vpls mac-table
<age>
<brief | detail | extensive | summary>
<bridge-domain bridge-domain-name>
<instance instance-name>
<interface interface-name>
<logical-system (all | logical-system-name)>
<mac-address>
<vlan-id vlan-id-number>
```

Release Information

Command introduced in Junos OS Release 8.5.
Command introduced in Junos OS Release 15.1.

Description

Display learned virtual private LAN service (VPLS) media access control (MAC) address information.

Options

none—Display all learned VPLS MAC address information.

age— (Optional) Display age of a single mac-address.

brief | detail | extensive | summary—(Optional) Display the specified level of output.

bridge-domain *bridge-domain-name*—(Optional) Display learned VPLS MAC addresses for the specified bridge domain.

instance *instance-name*—(Optional) Display learned VPLS MAC addresses for the specified instance.

interface *interface-name*—(Optional) Display learned VPLS MAC addresses for the specified instance.

logical-system (all | *logical-system-name*)—(Optional) Display learned VPLS MAC addresses for all logical systems or for the specified logical system.

mac-address—(Optional) Display the specified learned VPLS MAC address information..

vlan-id *vlan-id-number*—(Optional) Display learned VPLS MAC addresses for the specified VLAN.

Required Privilege Level

view

List of Sample Output

show vpls mac-table on page 197
show vpls mac-table (with Layer 2 Services over GRE Interfaces) on page 197
show vpls mac-table (with VXLAN enabled) on page 197
show vpls mac-table age (for GE interface) on page 198
show vpls mac-table age (for AE interface) on page 198

show vpls mac-table count on page 198
show vpls mac-table detail on page 199
show vpls mac-table extensive on page 199

Output Fields Table 26 on page 150 describes the output fields for the **show vpls mac-table** command. Output fields are listed in the approximate order in which they appear.

Table 31: show vpls mac-table Output fields

Field Name	Field Description
Age	Age of a single mac-address.
Routing instance	Name of the routing instance.
Bridging domain	Name of the bridging domain.
MAC address	MAC address or addresses learned on a logical interface.
MAC flags	Status of MAC address learning properties for each interface: • **S**—Static MAC address configured. • **D**—Dynamic MAC address learned. • **SE**—MAC accounting is enabled. • **NM**—Nonconfigured MAC.
Logical interface	Name of the logical interface.
MAC count	Number of MAC addresses learned on a specific routing instance or interface.
Learning interface	Logical interface or logical Label Switched Interface (LSI) the address is learned on.
Base learning interface	Base learning interface of the MAC address. This field is introduced in Junos OS Release 14.2.
Learn VLAN ID/VLAN	VLAN ID of the routing instance or bridge domain in which the MAC address was learned.
VXLAN ID/VXLAN	VXLAN Network Identifier (VNI)
Layer 2 flags	Debugging flags signifying that the MAC address is present in various lists.
Epoch	Spanning Tree Protocol epoch number identifying when the MAC address was learned. Used for debugging.
Sequence number	Sequence number assigned to this MAC address. Used for debugging.
Learning mask	Mask of Packet Forwarding Engines where this MAC address was learned. Used for debugging.
IPC generation	Creation time of the logical interface when this MAC address was learned. Used for debugging.

 Copyright © 2018, Juniper Networks, Inc.

Sample Output

show vpls mac-table

```
user@host> show vpls mac-table

MAC flags (S -static MAC, D -dynamic MAC,
           SE -Statistics enabled, NM -Non configured MAC)

Routing instance : vpls_ldp1
VLAN : 223
   MAC                 MAC      Logical
   address             flags    interface
   00:00:5e:00:53:5d   D        ge-0/2/5.400

MAC flags (S -static MAC, D -dynamic MAC,
           SE -Statistics enabled, NM -Non configured MAC)

Routing instance : vpls_red
VLAN : 401
   MAC                 MAC      Logical
   address             flags    interface
   00:00:5e:00:53:12   D        lsi.1051138
   00:00:5e:00:53:f0   D        lsi.1051138
```

show vpls mac-table (with Layer 2 Services over GRE Interfaces)

```
user@host> show vpls mac-table

MAC flags (S -static MAC, D -dynamic MAC, L -locally learned
           SE -Statistics enabled, NM -Non configured MAC, R -Remote PE MAC)

Routing instance : vpls_4site:1000
 Bridging domain : __vpls_4site:1000__,   MAC                 MAC      Logical
   address             flags    interface
   00:00:5e:00:53:f4   D,SE     ge-4/2/0.1000
   00:00:5e:00:53:33   D,SE     lsi.1052004
   00:00:5e:00:53:32   D,SE     lsi.1048840
   00:00:5e:00:53:14   D,SE     lsi.1052005
   00:00:5e:00:53:f7   D,SE     gr-1/2/10.10
```

show vpls mac-table (with VXLAN enabled)

```
user@host> show vpls mac-table

MAC flags (S -static MAC, D -dynamic MAC, L -locally learned
           SE -Statistics enabled, NM -Non configured MAC, R -Remote PE MAC)

Routing instance : vpls_4site:1000
 Bridging domain : __vpls_4site:1000__, VLAN : 4094,4093
  VXLAN: Id : 300, Multicast group: 233.252.0.1
   MAC                 MAC      Logical
   address             flags    interface
   00:00:5e:00:53:f4   D,SE     ge-4/2/0.1000
   00:00:5e:00:53:33   D,SE     lsi.1052004
   00:00:5e:00:53:32   D,SE     lsi.1048840
   00:00:5e:00:53:14   D,SE     lsi.1052005
   00:00:5e:00:53:f7   D,SE     vtep.1052010
   00:00:5e:00:53:3f   D,SE     vtep.1052011
```

Copyright © 2018, Juniper Networks, Inc.

show vpls mac-table age (for GE interface)

```
user@host> show vpls mac-table age 00:00:5e:00:53:1a instance vpls_instance_1

MAC Entry Age information
Current Age: 4 seconds
```

show vpls mac-table age (for AE interface)

```
user@host> show vpls mac-table age 000:00:5e:00:53:1a instance vpls_instance_1

MAC Entry Age information
Current Age on FPC1: 102 seconds
Current Age on FPC2: 94 seconds
```

show vpls mac-table count

```
user@host> show vpls mac-table count

0 MAC address learned in routing instance __example_private1__

  MAC address count per interface within routing instance:
    Logical interface        MAC count
    lc-0/0/0.32769                   0
    lc-0/1/0.32769                   0
    lc-0/2/0.32769                   0
    lc-2/0/0.32769                   0
    lc-0/3/0.32769                   0
    lc-2/1/0.32769                   0
    lc-9/0/0.32769                   0
    lc-11/0/0.32769                  0
    lc-2/2/0.32769                   0
    lc-9/1/0.32769                   0
    lc-11/1/0.32769                  0
    lc-2/3/0.32769                   0
    lc-9/2/0.32769                   0
    lc-11/2/0.32769                  0
    lc-11/3/0.32769                  0
    lc-9/3/0.32769                   0

  MAC address count per learn VLAN within routing instance:
    Learn VLAN ID            MAC count
                0                    0

1 MAC address learned in routing instance vpls_ldp1

  MAC address count per interface within routing instance:
    Logical interface        MAC count
    lsi.1051137                      0
    ge-0/2/5.400                     1

  MAC address count per learn VLAN within routing instance:
    Learn VLAN ID            MAC count
                0                    1

1 MAC address learned in routing instance vpls_red

  MAC address count per interface within routing instance:
    Logical interface        MAC count
    ge-0/2/5.300                     1
```


Copyright © 2018, Juniper Networks, Inc.

```
  MAC address count per learn VLAN within routing instance:
    Learn VLAN ID            MAC count
                0                    1
```

show vpls mac-table detail

user@host> **show vpls mac-table detail**

```
MAC address: 00:00:5e:00:53:5d
  Routing instance: vpls_ldp1
   Learning interface: ge-0/2/5.400
   Layer 2 flags: in_ifd, in_ifl, in_vlan, kernel
   Epoch: 0                            Sequence number: 1
   Learning mask: 0x1                  IPC generation: 0

MAC address: 00:00:5e:00:53:5d
  Routing instance: vpls_red
   Learning interface: ge-0/2/5.300
   Layer 2 flags: in_ifd, in_ifl, in_vlan, kernel
   Epoch: 0                            Sequence number: 1
   Learning mask: 0x1                  IPC generation: 0
```

show vpls mac-table extensive

user@host> **show vpls mac-table extensive**

```
MAC address: 00:00:5e:00:53:00
  Routing instance: vpls_1
   Bridging domain: __vpls_1__, VLAN : NA
   Learning interface: lsi.1049165
   Base learning interface: lsi.1049165
   Layer 2 flags: in_hash,in_ifd,in_ifl,in_vlan,in_rtt,kernel,in_ifbd
   Epoch: 0                            Sequence number: 1
   Learning mask: 0x00000001

MAC address: 00:00:5e:00:53:01
  Routing instance: vpls_1
   Bridging domain: __vpls_1__, VLAN : NA
   Learning interface: lsi.1049165
   Base learning interface: lsi.1049165
   Layer 2 flags: in_hash,in_ifd,in_ifl,in_vlan,in_rtt,kernel,in_ifbd
   Epoch: 0                            Sequence number: 1
   Learning mask: 0x00000001

MAC address: 00:00:5e:00:53:02
  Routing instance: vpls_1
   Bridging domain: __vpls_1__, VLAN : NA
   Learning interface: lsi.1049165
   Base learning interface: lsi.1049165
   Layer 2 flags: in_hash,in_ifd,in_ifl,in_vlan,in_rtt,kernel,in_ifbd
   Epoch: 0                            Sequence number: 1
   Learning mask: 0x00000001

MAC address: 00:00:5e:00:53:03
  Routing instance: vpls_1
   Bridging domain: __vpls_1__, VLAN : NA
   Learning interface: lsi.1049165
```

```
Base learning interface: lsi.1049165
Layer 2 flags: in_hash,in_ifd,in_ifl,in_vlan,in_rtt,kernel,in_ifbd
Epoch: 0                            Sequence number: 1
Learning mask: 0x00000001
```


Copyright © 2018, Juniper Networks, Inc.

traceroute overlay

Syntax

```
traceroute overlay
<tunnel-type>
vni vni
tunnel-src source-ip-address
tunnel-dst destination-ip-address
<mac mac-address>
<ttl value>
<hash-input-interface input-interface>
<hash-source-mac source-mac-address>
<hash-destination-mac destination-mac-address>
<hash-source-address source-IP-address>
<hash-destination-address destination-IP-address>
<hash-vlan vlan-id>
<hash-protocol protocol-id>
<hash-source-port source-layer4-port>
<hash-destination-port destination-layer4-port>
```

Release Information

Command introduced in Junos OS Release 14.1X53-D30 for QFX Series switches.
Command introduced in Junos OS Release 16.1 for EX Series switches.
Command introduced in Junos OS Release 16.2 for MX Series routers.

Description

Display the route that packets take between two Virtual Extensible LAN (VXLAN) tunnel endpoints (VTEPs) and within the context of a VXLAN overlay segment. Use **traceroute overlay** as an isolation and debugging tool to locate points of failure within an overlay VXLAN tunnel. The output is useful for diagnosing a point of failure in the path from the device to the destination host, and for addressing network traffic latency and throughput problems.

NOTE: **The traceroute overlay command is not supported for IPv6.**

Options

tunnel-type—(Optional) Specify the overlay tunnel type used in a virtualized environment such as: VXLAN, Network Virtualization using Generic Routing Encapsulation (NVGRE), MPLS over User Datagram Protocol (UDP), and MPLS over General Routing Encapsulation (GRE) tunnels.

NOTE: **Only VXLAN overlay tunnel types are supported.**

vni *vni*—Specify the VNI of the VXLAN overlay segment.

Range: 1 through 16,777,215

tunnel-src ***source-ip-address***—Specify the IP address of the source entity at end of the tunnel, such as the source VTEP.

tunnel-dst ***destination-ip-address***—Specify the IP address of the destination entity at the end of the tunnel, such as the remote VTEP.

mac ***mac-address***—(Optional) Include the physical or hardware address on the end host you are trying to reach.

ttl ***value***—(Optional) Time-to-live (TTL) value to include as the maximum number of hops in the traceroute request.

For MX Series routers, the range of values is **0** through **255**. The default value is **255**.

Range: (QFX Series, EX9200 switches) 1 through 255

Default: 255

hash-source-mac ***source-mac-address***—(Optional) Specify the MAC address of the source end host.

NOTE: The hash parameters provide values that correspond to a particular data flow that the **traceroute overlay** command debugs. Based on the values that you specify, the system calculates a VXLAN UDP header source port hash, which is included in the VXLAN UDP header of the overlay ping and traceroute packets. Including the calculated hash in the VXLAN header enables the overlay ping and traceroute packets to emulate data packets in the flow that you are troubleshooting.

When using the hash parameters, we recommend that you specify a value for each parameter. The exception to this guideline is the hash-vlan parameter, which you do not have to use if the source endpoint is not a member of a VLAN. This practice ensures that the overlay ping and traceroute processes are successful and that the output for each command is accurate. If you do not specify a value for one or more of the hash parameters, the system sends an OAM request that might include incorrect hash values and generates a warning message.

Hash computation supports TCP and UDP protocols only.

hash-destination-mac ***destination-mac-address***—(Optional) Specify the MAC address of the destination end host.

hash-source-address ***source-IP-address***—(Optional) Specify the IP address of the source end host.

hash-destination-address ***destination-IP-address***—(Optional) Specify the IP address of the destination end host.

Copyright © 2018, Juniper Networks, Inc.

hash-vlan ***vlan-id***—(Optional, QFX Series switches only) Specify the VLAN ID of the end host.

Range: 1 through 4094

hash-input-interface ***interface-name***—(Optional, QFX Series switches only) Specify the ingress interface of the flow on the Juniper Networks device.

hash-protocol ***protocol-id***—(Optional) Specify the TCP/UDP IP protocol ID of the end host.

Range: 1 through 255

hash-source-port ***source-layer4-port***—(Optional) Specify the Layer 4 source port of the end host.

Range: 1 through 65,535

hash-destination-port ***destination-layer4-port***—(Optional) Specify the Layer 4 destination port of the end host.

Range: 1 through 65,535

Required Privilege Level

network

Related Documentation

- Understanding Overlay ping and traceroute Packet Support on page 23
- Example: Troubleshooting a VXLAN Overlay Network By Using Overlay Ping and Traceroute on QFX Series Switches on page 91
- ping overlay on page 156

List of Sample Output

run traceroute overlay on page 204

Output Fields

Use the **traceroute overlay** command to determine overlay segments within a VXLAN tunnel. The output is useful for diagnosing a point of failure in the path from the device to the destination host, and for addressing network traffic latency and throughput problems.

Table 32 on page 203 lists the output fields for the **traceroute overlay** command. Output fields are listed in the approximate order in which they appear.

Table 32: traceroute overlay Output Fields

Field Name	Field Description
vni	The VNI of the VXLAN overlay segment.
tunnel src ip	The IP address of the source end of the tunnel.
tunnel dst ip	The IP address of the destination end of the tunnel.

Table 32: traceroute overlay Output Fields (continued)

Field Name	Field Description
mac address	The physical or hardware address of the end host you are trying to reach.
ttl	TTL value for the maximum number of hops in the traceroute request.
hash-parameters	The hash parameters provide the input interface, source MAC address, destination MAC address, source IP address, destination IP address, and the VLAN ID of the two end hosts within an overlay segment. Hash parameters enable platform-specific hash computation to use as the source port in the outer UDP header.
ttl	Number of hops remaining in the traceroute message. The TTL is decremented at each hop.
Address	The sending IPv4 address.
Sender Timestamp	Timestamp in microseconds when hop was sent.
Receiver Timestamp	Timestamp in microseconds when hop was received.
Response Time	Time in microseconds for traceroute to respond.

Sample Output

run traceroute overlay

`user@host>` **traceroute overlay tunnel-type vxlan vni 100 tunnel-src 192.0.2.10 tunnel-dst 192.0.2.20 mac 00:00:5E:00:53:cc hash-source-mac 00:00:5E:00:53:aa hash-destination-mac 00:00:5E:00:53:cc hash-source-address 198.51.100.1 hash-destination-address 198.51.100.3 hash-vlan 150 hash-input-interface xe-0/0/2 hash-protocol 17 hash-source-port 4456 hash-destination-port 4540**

```
traceroute-overlay protocol vxlan

        vni 100
        tunnel src ip 192.0.2.10
        tunnel dst ip 192.0.2.20
        mac address 00:00:5E:00:53:cc
        ttl 255

        hash-parameters:
                input-ifd-idx 653
                end-host smac 00:00:5E:00:53:aa
                end-host dmac 00:00:5E:00:53:cc
                end-host src ip 198.51.100.1
                end-host dst ip 198.51.100.3
                end-host protocol 17
                end-host l4-src-port 4456
                end-host l4-dst-port 4540
                end-host vlan 150
```


Copyright © 2018, Juniper Networks, Inc.

```
ttl  Address    Sender Timestamp               Receiver Timestamp
Response Time
  1   10.1.0.1   09-25 00:56:17 PDT.663 msecs            *
10 msecs
  2   192.0.2.20 09-25 00:56:17 PDT.684 msecs   09-25 00:56:17 PDT.689 msecs
11 msecs

  Overlay-segment  present at RVTEP 192.0.2.20


      End-System  Present
```

Copyright © 2018, Juniper Networks, Inc.