Junos Fusion Data Center Feature Guide

Modified: 2018-09-05

Juniper Networks, Inc.
1133 Innovation Way
Sunnyvale, California 94089
USA
408-745-2000
www.juniper.net

Junos Fusion Data Center Feature Guide

The information in this document is current as of the date on the title page.

YEAR 2000 NOTICE

Juniper Networks hardware and software products are Year 2000 compliant. Junos OS has no known time-related limitations through the year 2038. However, the NTP application is known to have some difficulty in the year 2036.

END USER LICENSE AGREEMENT

The Juniper Networks product that is the subject of this technical documentation consists of (or is intended for use with) Juniper Networks software. Use of such software is subject to the terms and conditions of the End User License Agreement ("EULA") posted at https://www.juniper.net/support/eula/. By downloading, installing or using such software, you agree to the terms and conditions of that EULA.

Table of Contents

List of Figures

List of Tables

About the Documentation

Documentation and Release Notes

To obtain the most current version of all Juniper Networks® technical documentation, see the product documentation page on the Juniper Networks website at https://www.juniper.net/documentation/.

If the information in the latest release notes differs from the information in the documentation, follow the product Release Notes.

Juniper Networks Books publishes books by Juniper Networks engineers and subject matter experts. These books go beyond the technical documentation to explore the nuances of network architecture, deployment, and administration. The current list can be viewed at https://www.juniper.net/books.

Using the Examples in This Manual

If you want to use the examples in this manual, you can use the **load merge** or the **load merge relative** command. These commands cause the software to merge the incoming configuration into the current candidate configuration. The example does not become active until you commit the candidate configuration.

If the example configuration contains the top level of the hierarchy (or multiple hierarchies), the example is a *full example*. In this case, use the **load merge** command.

If the example configuration does not start at the top level of the hierarchy, the example is a *snippet*. In this case, use the **load merge relative** command. These procedures are described in the following sections.

Merging a Full Example

To merge a full example, follow these steps:

1. From the HTML or PDF version of the manual, copy a configuration example into a text file, save the file with a name, and copy the file to a directory on your routing platform.

   For example, copy the following configuration to a file and name the file **ex-script.conf**. Copy the **ex-script.conf** file to the **/var/tmp** directory on your routing platform.

   ```
   system {
     scripts {
       commit {
         file ex-script.xsl;
       }
     }
   }
   interfaces {
     fxp0 {
       disable;
       unit 0 {
         family inet {
           address 10.0.0.1/24;
         }
       }
     }
   }
   ```

2. Merge the contents of the file into your routing platform configuration by issuing the **load merge** configuration mode command:

   ```
   [edit]
   user@host# load merge /var/tmp/ex-script.conf
   load complete
   ```

Merging a Snippet

To merge a snippet, follow these steps:

1. From the HTML or PDF version of the manual, copy a configuration snippet into a text file, save the file with a name, and copy the file to a directory on your routing platform.

   For example, copy the following snippet to a file and name the file **ex-script-snippet.conf**. Copy the **ex-script-snippet.conf** file to the **/var/tmp** directory on your routing platform.

   ```
   commit {
     file ex-script-snippet.xsl; }
   ```

2. Move to the hierarchy level that is relevant for this snippet by issuing the following configuration mode command:

   ```
   [edit]
   ```

```
user@host# edit system scripts
[edit system scripts]
```

3. Merge the contents of the file into your routing platform configuration by issuing the **load merge relative** configuration mode command:

```
[edit system scripts]
user@host# load merge relative /var/tmp/ex-script-snippet.conf
load complete
```

For more information about the **load** command, see CLI Explorer.

Documentation Conventions

Table 1 on page xix defines notice icons used in this guide.

Table 1: Notice Icons

Icon	Meaning	Description
	Informational note	Indicates important features or instructions.
	Caution	Indicates a situation that might result in loss of data or hardware damage.
	Warning	Alerts you to the risk of personal injury or death.
	Laser warning	Alerts you to the risk of personal injury from a laser.
	Tip	Indicates helpful information.
	Best practice	Alerts you to a recommended use or implementation.

Table 2 on page xix defines the text and syntax conventions used in this guide.

Table 2: Text and Syntax Conventions

Convention	Description	Examples
Bold text like this	Represents text that you type.	To enter configuration mode, type the **configure** command: user@host> **configure**

Table 2: Text and Syntax Conventions (continued)

Convention	Description	Examples
`Fixed-width text like this`	Represents output that appears on the terminal screen.	`user@host>` **show chassis alarms** `No alarms currently active`
Italic text like this	• Introduces or emphasizes important new terms. • Identifies guide names. • Identifies RFC and Internet draft titles.	• A policy *term* is a named structure that defines match conditions and actions. • *Junos OS CLI User Guide* • RFC 1997, *BGP Communities Attribute*
Italic text like this	Represents variables (options for which you substitute a value) in commands or configuration statements.	Configure the machine's domain name: [edit] root@# **set system domain-name** *domain-name*
Text like this	Represents names of configuration statements, commands, files, and directories; configuration hierarchy levels; or labels on routing platform components.	• To configure a stub area, include the **stub** statement at the **[edit protocols ospf area area-id]** hierarchy level. • The console port is labeled **CONSOLE**.
< > (angle brackets)	Encloses optional keywords or variables.	**stub <default-metric** *metric***>;**
| (pipe symbol)	Indicates a choice between the mutually exclusive keywords or variables on either side of the symbol. The set of choices is often enclosed in parentheses for clarity.	**broadcast | multicast** (*string1* | *string2* | *string3*)
# (pound sign)	Indicates a comment specified on the same line as the configuration statement to which it applies.	**rsvp { # Required for dynamic MPLS only**
[ ] (square brackets)	Encloses a variable for which you can substitute one or more values.	**community name members [** *community-ids* **]**

Indention and braces ({ })	Identifies a level in the configuration hierarchy.	[edit]
		routing-options {
		static {
		route default {
		nexthop *address*;
		retain;
		}
		}
		}

; (semicolon)	Identifies a leaf statement at a configuration hierarchy level.	
GUI Conventions		
Bold text like this	Represents graphical user interface (GUI) items you click or select.	• In the Logical Interfaces box, select **All Interfaces**. • To cancel the configuration, click **Cancel**.

Table 2: Text and Syntax Conventions (continued)

Convention	Description	Examples
> (bold right angle bracket)	Separates levels in a hierarchy of menu selections.	In the configuration editor hierarchy, select **Protocols>Ospf**.

Documentation Feedback

We encourage you to provide feedback so that we can improve our documentation. You can use either of the following methods:

- Online feedback system—Click TechLibrary Feedback, on the lower right of any page on the Juniper Networks TechLibrary site, and do one of the following:

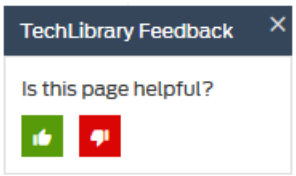

  - Click the thumbs-up icon if the information on the page was helpful to you.
  - Click the thumbs-down icon if the information on the page was not helpful to you or if you have suggestions for improvement, and use the pop-up form to provide feedback.

- E-mail—Send your comments to **techpubs-comments@juniper.net**. Include the document or topic name, URL or page number, and software version (if applicable).

Requesting Technical Support

Technical product support is available through the Juniper Networks Technical Assistance Center (JTAC). If you are a customer with an active J-Care or Partner Support Service support contract, or are covered under warranty, and need post-sales technical support, you can access our tools and resources online or open a case with JTAC.

- JTAC policies—For a complete understanding of our JTAC procedures and policies, review the *JTAC User Guide* located at https://www.juniper.net/us/en/local/pdf/resource-guides/7100059-en.pdf.
- Product warranties—For product warranty information, visit https://www.juniper.net/support/warranty/.
- JTAC hours of operation—The JTAC centers have resources available 24 hours a day, 7 days a week, 365 days a year.

Self-Help Online Tools and Resources

For quick and easy problem resolution, Juniper Networks has designed an online self-service portal called the Customer Support Center (CSC) that provides you with the following features:

- Find CSC offerings: https://www.juniper.net/customers/support/
- Search for known bugs: https://prsearch.juniper.net/
- Find product documentation: https://www.juniper.net/documentation/
- Find solutions and answer questions using our Knowledge Base: https://kb.juniper.net/
- Download the latest versions of software and review release notes: https://www.juniper.net/customers/csc/software/
- Search technical bulletins for relevant hardware and software notifications: https://kb.juniper.net/InfoCenter/
- Join and participate in the Juniper Networks Community Forum: https://www.juniper.net/company/communities/
- Open a case online in the CSC Case Management tool: https://www.juniper.net/cm/

To verify service entitlement by product serial number, use our Serial Number Entitlement (SNE) Tool: https://entitlementsearch.juniper.net/entitlementsearch/

Opening a Case with JTAC

You can open a case with JTAC on the Web or by telephone.

- Use the Case Management tool in the CSC at https://www.juniper.net/cm/.
- Call 1-888-314-JTAC (1-888-314-5822 toll-free in the USA, Canada, and Mexico).

For international or direct-dial options in countries without toll-free numbers, see https://www.juniper.net/support/requesting-support.html.

PART 1

Junos Fusion Data Center

CHAPTER 1

Junos Fusion Data Center Overview

Junos Fusion Data Center Overview

Junos Fusion provides a method of significantly expanding the number of available network interfaces on a device—called an *aggregation device*—by allowing the aggregation device to add interfaces through interconnections with *satellite devices*. The entire system—the interconnected aggregation device and satellite devices—is called a *Junos Fusion*. A Junos Fusion simplifies network topologies and administration because it appears to the larger network as a single, port-dense device that can be managed from one management IP address.

Junos Fusion Data Center brings the Junos Fusion technology to data center networks. In a Junos Fusion Data Center, QFX10002, QFX10008, and QFX10016 switches act as aggregation devices while EX4300, QFX5100, QFX5110, and QFX5200 switches act as satellite devices.

In a Junos Fusion Data Center, each satellite device has at least one connection to the aggregation device. The aggregation device acts as the single point of management for all devices in the Junos Fusion Data Center. The satellite devices provide network-facing interfaces that send and receive network traffic.

A basic Junos Fusion topology is composed of an aggregation device and multiple satellite devices. Each satellite device has at least one connection to the aggregation device. The satellite devices provide interfaces that send and receive network traffic. Network traffic can be forwarded over the aggregation device within the Junos Fusion. Figure 1 on page 4 provides an illustration of a basic Junos Fusion Data Center topology.

Figure 1: Basic Junos Fusion Data Center Topology

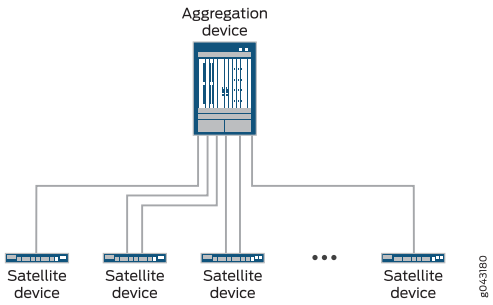

Junos Fusion Data Center supports up to four aggregation devices that can be multihomed to each satellite device. A multihomed topology with multiple aggregation devices provides load balancing and redundancy to the Junos Fusion Data Center topology. A Junos Fusion Data Center can support two aggregation devices using the ICCP protocol from MC-LAG to connect and maintain the Junos Fusion topology. Starting with Junos OS Release 18.1R2-S2, a Junos Fusion Data Center can support four aggregation devices using Ethernet VPN (EVPN) to connect and maintain the Junos Fusion topology. Figure 2 on page 4 shows a Junos Fusion Data Center with two aggregation devices using MC-LAG. , while Figure 3 on page 5 shows a Junos Fusion Data Center with four aggregation devices using EVPN.

Figure 2: Junos Fusion Data Center Topology with Dual Aggregation Devices Using MC-LAG

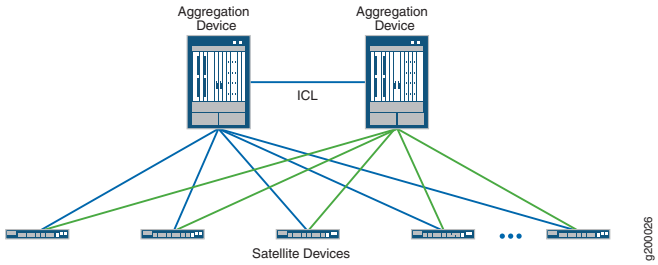

Figure 3: Junos Fusion Data Center Topology with Four Aggregation Devices Using EVPN

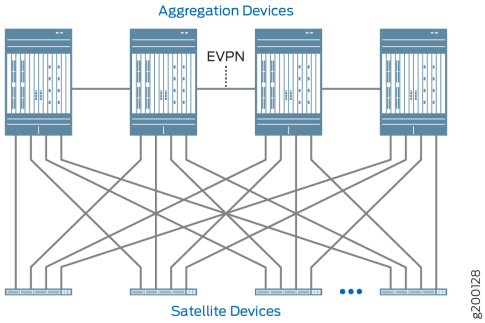

A QFX10002, QFX10008 or QFX10016 switch acting as an aggregation device in a Junos Fusion Data Center is responsible for almost all management tasks, including interface configuration for every satellite device interface in the topology. The aggregation device runs Junos OS software for the entire Junos Fusion Data Center, and the network-facing interfaces on the satellite devices—called *extended ports*—are configured from the aggregation device and support features that are supported by the version of Junos OS running on the aggregation device.

The satellite devices and the aggregation device maintain the control plane for the Junos Fusion Data Center using multiple internal satellite management protocols. Network traffic can be forwarded between satellite devices through the aggregation device. Junos Fusion Data Center supports the IEEE 802.1BR standard.

Junos Fusion Data Center provides the following benefits:

- Simplified network topology—You can combine multiple devices into a topology that appears to the larger network as a single device, and then manage the device from a single IP address.
- Port density—You can configure a large number of network-facing interfaces into a topology that operates as a single network device.
- Manageability—You can manage a Junos Fusion that supports a large number of network-facing interfaces from a single point. The single point of management, the aggregation device, runs Junos OS software for the entire Junos Fusion.
- Flexibility—You can easily expand the size of your Junos Fusion by adding satellite devices to the Junos Fusion as your networking needs grow.
- Investment protection—In environments that need to expand because the capabilities of the existing hardware are maximized, a Junos Fusion can be a logical upgrade option because it enables the network to evolve with minimal disruption to the existing network and without having to remove the existing, previously purchased devices from the network.

Release History Table

Release	Description
18.1R2-S2	Starting with Junos OS Release 18.1R2-S2, a Junos Fusion Data Center can support four aggregation devices using Ethernet VPN (EVPN) to connect and maintain the Junos Fusion topology.

Related Documentation

- *Enterprise Data Center: Junos Fusion Data Center Architecture*
- Understanding Junos Fusion Data Center Components on page 6
- Understanding Junos Fusion Ports on page 12
- Understanding the Flow of Data Packets in a Junos Fusion Topology on page 37
- Configuring or Expanding a Junos Fusion Data Center on page 47

Understanding Junos Fusion Data Center Components

This topic describes the components of a Junos Fusion Data Center. It covers:

Aggregation Devices

The aggregation device acts as the single point of management for all devices in the Junos Fusion. All Junos Fusion management responsibilities, including interface configuration for every satellite device interface in the Junos Fusion, are handled by the aggregation device. The aggregation device runs Junos OS software for the entire Junos Fusion, and the interfaces on the satellite devices are configured from the aggregation device and mostly support features that are supported by the version of Junos OS running on the aggregation device.

An aggregation device:

- Is a QFX10002, QFX10008 or QFX10016 switch in a Junos Fusion Data Center.
- Has at least one connection to each satellite device.

- Runs Junos OS software for the entire Junos Fusion.
- Manages the entire Junos Fusion. All Junos Fusion configuration management is handled on the aggregation device, including interface configuration of the satellite device interfaces.

The hardware specifications for aggregation devices in a Junos Fusion Data Center are discussed in greater detail in "Understanding Junos Fusion Data Center Software and Hardware Requirements" on page 21.

Dual Aggregation Device Topologies

Junos Fusion Data Center supports dual aggregation device topologies. The advantages of a dual aggregation device topology include:

- Load balancing. Traffic traversing the Junos Fusion Data Center can be load balanced across both aggregation devices.
- Redundancy. The Junos Fusion Data Center can pass traffic even in the unexpected event of an aggregation device failure.

A Junos Fusion Data Center supports multiple aggregation devices using Multichassis Link Aggregation (MC-LAG) groups and the Inter-Chassis Control Protocol (ICCP).

A Junos Fusion Data Center with dual aggregation devices is configured as an MC-LAG with one redundancy group. The redundancy group includes two peering chassis IDs—the aggregation devices—and all satellite devices in the Junos Fusion Data Center. The aggregation devices are connected using an interchassis link (ICL) in the MC-LAG topology.

ICCP runs inside the Junos Fusion on all dual aggregation topologies. ICCP parameters are automatically configured in a Junos Fusion Data Center by the automatic ICCP provisioning feature, which simplifies the ICCP configuration procedure. ICCP configuration can be customized, however. See "Understanding ICCP in a Junos Fusion using Dual Aggregation Devices" on page 25 for information on ICCP. See *Configuring Multichassis Link Aggregation on EX Series Switches* for information on configuring ICCP parameters.

Four Aggregation Device Topologies

Starting with Junos OS Release 18.1R2-S2, Junos Fusion Data Center enables all satellite devices to be multihomed to four aggregation devices. In this topology, the four aggregation devices comprise a core fabric in which EVPN is used to learn about the aggregation devices and advertise host and server MAC addresses, network reachability information, and other states among the aggregation devices.

A Junos Fusion Data Center with four aggregation devices is configured as one redundancy group. The redundancy group includes four peering chassis IDs—the aggregation devices—and all satellite devices in the Junos Fusion Data Center.

For more information about Junos Fusion Data Center with EVPN, including the benefits of using it, see "Understanding EVPN in a Junos Fusion Data Center" on page 26.

Satellite Devices

A satellite device:

- Is an EX4300, QFX5100, QFX5110, or QFX5200 switch in a Junos Fusion Data Center.
- Runs a version of satellite software after being converted into a satellite device.
- Has a direct connection to at least one aggregation device.
- Provides network interfaces to send and receive traffic for the Junos Fusion.
- Is managed and configured by the aggregation device.

The hardware specifications for satellite devices in a Junos Fusion Data Center are discussed in greater detail in Understanding Junos Fusion Data Center Software and Hardware Requirements.

Cascade Ports

A *cascade port* is a port on an aggregation device that sends and receives control and network traffic from an attached satellite device. All traffic passed between a satellite device and the aggregation device in a Junos Fusion traverses the cascade port.

The link that connects an aggregation device to a satellite device has an interface on each end of the link. The interface on the aggregation device end of the link is a cascade port. The interface on the satellite device end of the link is an uplink port.

Satellite devices are added to a Junos Fusion by configuring the interface on the aggregation device end of a link into a satellite device.

A cascade port is typically a 10-Gbps interface with an SFP+ transceiver or a 40-Gbps interface with a QSFP+ transceiver, but any interface on the aggregation device that connects to the satellite device can be converted into a cascade port.

The location of the cascade ports in a Junos Fusion are illustrated in Figure 4 on page 8.

Figure 4: Cascade Ports

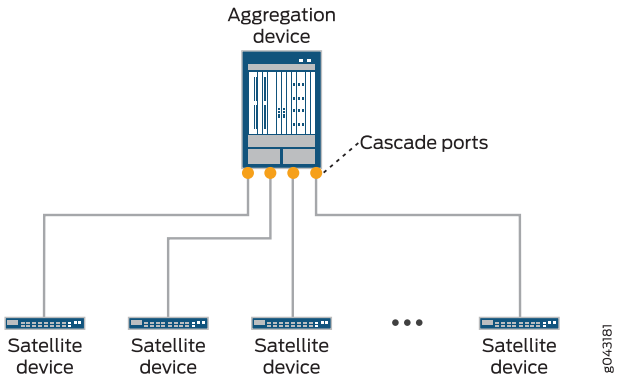

The hardware specifications for cascade ports for a Junos Fusion Data Center are discussed in greater detail in "Understanding Junos Fusion Data Center Software and Hardware Requirements" on page 21.

Uplink Ports

An *uplink port* is a physical interface on a satellite device that provides a connection to an aggregation device. All network and control traffic on a satellite device that is transported to an aggregation device is sent or received on the satellite device's uplink port.

The link that connects an aggregation device to a satellite device has an interface on each end of the link. The interface on the aggregation device end of the link is a cascade port. The interface on the satellite device end of the link is an uplink port.

Uplink ports are automatically created when a cascade port is configured on the aggregation device end of the link.

A single satellite device can have multiple uplink port connections to an aggregation device. The multiple uplink ports connections to a single aggregation device provide redundancy and additional bandwidth for satellite device to aggregation device connections.

Satellite devices in a Junos Fusion with multiple aggregation devices must have at least one uplink port connection to each aggregation device.

An uplink port is typically a 10-Gbps SFP+ interface or a 40-Gbps QSFP+ interface, but any 1-Gbps interface that connects a satellite device to an aggregation device can become an uplink port.

Figure 5 on page 9 labels the uplink port location in a Junos Fusion Data Center.

Figure 5: Junos Fusion Data Center Ports

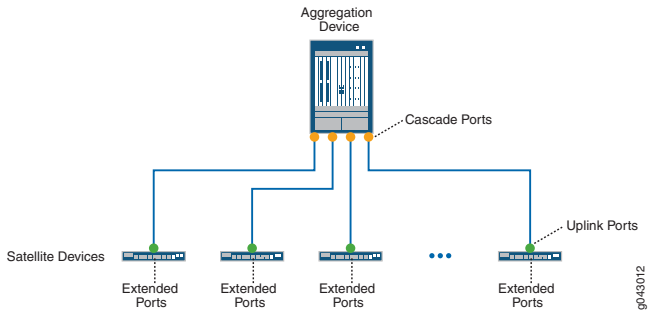

Extended Ports

An *extended port* is a network-facing port on a satellite device that transmits and receives network traffic for the Junos Fusion.

Network traffic received on an extended port is passed, when appropriate, to the aggregation device over the uplink port to cascade port link.

Each network-facing port on a satellite device in a Junos Fusion is also an extended port. A single cascade port is associated with multiple extended ports.

Figure 5 on page 9 labels the extended ports location in a Junos Fusion Data Center.

Understanding FPC Identifiers and Assignment in a Junos Fusion

In a Junos Fusion, each satellite device must have an Flexible PIC Concentrator identifier (FPC ID).

The FPC ID is in the range of 65-254, and is used for Junos Fusion configuration, monitoring, and maintenance. Interface names—which are identified using the *type-fpc / pic / port* format—use the FPC ID as the *fpc* variable when the satellite device is participating in a Junos Fusion. For instance, built-in port 2 on PIC 0 of a satellite device—a Gigabit Ethernet interface on a satellite device that is using 101 as its FPC ID— uses **ge-101/0/2** as its interface name.

A Junos Fusion provides two methods of assigning an FPC identifier:

- Unique ID-based FPC identification
- Connectivity-based FPC identification

In unique ID-based FPC identification, the FPC ID is mapped to the serial number or MAC address of the satellite device. For instance, if a satellite device whose serial number was **ABCDEFGHIJKL** was assigned to FPC ID 110 using unique ID-based FPC identification, the satellite device with the serial number **ABCDEFGHIJKL** will always be associated with FPC ID 110 in the Junos Fusion. If the satellite device with the serial number **ABCDEFGHIJKL** connects to the aggregation device using a different cascade port, the FPC ID for the satellite device remains 110.

In connectivity-based FPC identification, the FPC ID is mapped to the cascade port. For instance, connectivity-based FPC identification can be used to assign FPC ID 120 to the satellite device that connects to the aggregation device using cascade port **xe-0/0/2**. If the existing satellite device that connects to cascade port **xe-0/0/2** is replaced by a new satellite device, the new satellite device connected to the cascade port assumes FPC ID 120.

Unique ID-based FPC identification is configured using the serial-number or system-id statement in the [**edit chassis** satellite-management fpc ***slot-id***] hierarchy.

Connectivity-based FPC identification is configured using the cascade-ports statement in the [**edit chassis** satellite-management fpc ***slot-id***] hierarchy.

FPC ID configurations must be identical between aggregation devices in a Junos Fusion Data Center with multiple aggregation devices. A satellite device that has two FPC IDs because of mismatched aggregation device configurations goes offline until the configuration issue is fixed.

If a prospective satellite device is connected to a Junos Fusion without having a configured FPC slot ID, the prospective satellite device does not participate in the Junos Fusion until an FPC ID is associated with it. The **show chassis satellite unprovision** output includes a list of satellite devices that are not participating in a Junos Fusion because of an FPC ID association issue.

Understanding Software in a Junos Fusion Data Center

In a Junos Fusion, the aggregation device is responsible for all configuration and management within the Junos Fusion and runs Junos OS software.

The satellite devices, meanwhile, run satellite software that has the built-in intelligence to extend features on the Junos OS software onto the satellite device.

The role of Junos OS and satellite software is discussed in greater detail in "Understanding Software in a Junos Fusion Data Center" on page 17.

You can see software version compatibility information for any Junos Fusion Data Center using the Junos Fusion Hardware and Software Compatibility Matrices.

The software specifications for a Junos Fusion Data Center are discussed in greater detail in Understanding Junos Fusion Data Center Software and Hardware Requirements.

Understanding Interface Naming in a Junos Fusion

Network interfaces in Junos OS are specified as follows:

- *type-fpc / pic / port*

In a Junos Fusion, the interface names on the satellite devices follow this naming convention, where:

- The *type* does not change for the interface when it becomes part of a Junos Fusion. The *type* for an **xe** interface, for instance, remains **xe** regardless of whether the interface is or is not in a Junos Fusion.

  You will see internally created **sd** interfaces in a Junos Fusion. The **sd** interfaces map to uplink ports and are used internally by the Junos Fusion to process some types of traffic.

- The *fpc* identifier in a Junos Fusion, which is user-configurable, is the FPC slot identifier. See "Understanding FPC Identifiers and Assignment in a Junos Fusion" on page 10.

  For instance, built-in port 2 on PIC 0—a Gigabit Ethernet interface that is acting as an extended port—on the satellite device numbered as FPC slot 101 would be identified as:

  ge-101/0/2

Understanding Feature Configuration in a Junos Fusion Data Center

In a Junos Fusion, the aggregation device is responsible for all configuration and management within the Junos Fusion and runs Junos OS software.

In a Junos Fusion with one aggregation device, all configuration—whether it's a configuration statement that enables a feature globally or enables a feature on a specific extended port—is done on the lone aggregation device.

A Junos Fusion using multiple aggregation devices often requires that the configuration of a feature—for example, an extended port, and entities such as routing instances and

VLANs that include the extended port—must match on all aggregation devices. If a configuration statement for the feature—in this case, the extended port—is specified differently on one aggregation device, the statement on that particular aggregation device might be implemented in an unpredictable manner or might not be implemented at all.

Junos Fusion Data Center supports configuration synchronization, a feature that allows users to specify configuration statements within a group on one device and then share that group with other devices. In a Junos Fusion Data Center with multiple aggregation devices, configuration synchronization can be used to ensure identical configuration between aggregation devices by sharing configuration between aggregation devices. See *Enterprise Data Center: Junos Fusion Data Center Architecture* for a sample Junos Fusion Data Center configuration primarily configured using configuration synchronization.

In a Junos Fusion Data Center with EVPN, QFX10008 and QFX10016 switches, which support two Routing Engines, can function as aggregation devices. From the perspective of configuration synchronization, each Routing Engine in these switches is considered to be a configuration peer. When applying a configuration group to QFX10008 or QFX10016 switches, remember to apply the group to each Routing Engine.

See "Understanding Configuration Synchronization in a Junos Fusion" on page 20 for additional information on feature configuration in a Junos Fusion Data Center.

Related Documentation

- Configuring or Expanding a Junos Fusion Data Center on page 47
- *Enterprise Data Center: Junos Fusion Data Center Architecture*

Understanding Junos Fusion Ports

In a Junos Fusion topology, cascade, uplink, and extended ports are components that play key roles. Figure 6 on page 13 and Figure 7 on page 14 show sample Junos Fusion topologies, which serve as points of reference for this discussion of cascade, uplink, and extended ports.

In the Junos Fusion topology shown in Figure 6 on page 13, two aggregation devices and two satellite devices are deployed. The aggregation devices are connected to each other through a multichassis link aggregation group (MC-LAG). Each satellite device is connected to its respective aggregation device through one or two links.

In the Junos Fusion Data Center topology shown in Figure 7 on page 14, four aggregation devices and four satellite devices are deployed. The four aggregation devices form an EVPN core fabric wherein each satellite device is multihomed to each aggregation device. Also, in this topology, some hosts are single-homed to a satellite device, and other hosts are multihomed to two satellite devices.

On the aggregation devices in each illustration, each link is connected to a cascade port (for example, CP1 on Aggregation device 1), while on the satellite devices, each link is connected to an uplink port (for example, UP1 on Satellite device 1). Hosts 1 through 4 are connected to Satellite device 1 through extended ports EP1 through EP4, and so on.

Figure 6: Cascade, Uplink, and Extended Ports in a Junos Fusion Topology With Two Aggregation Devices and MC-LAG

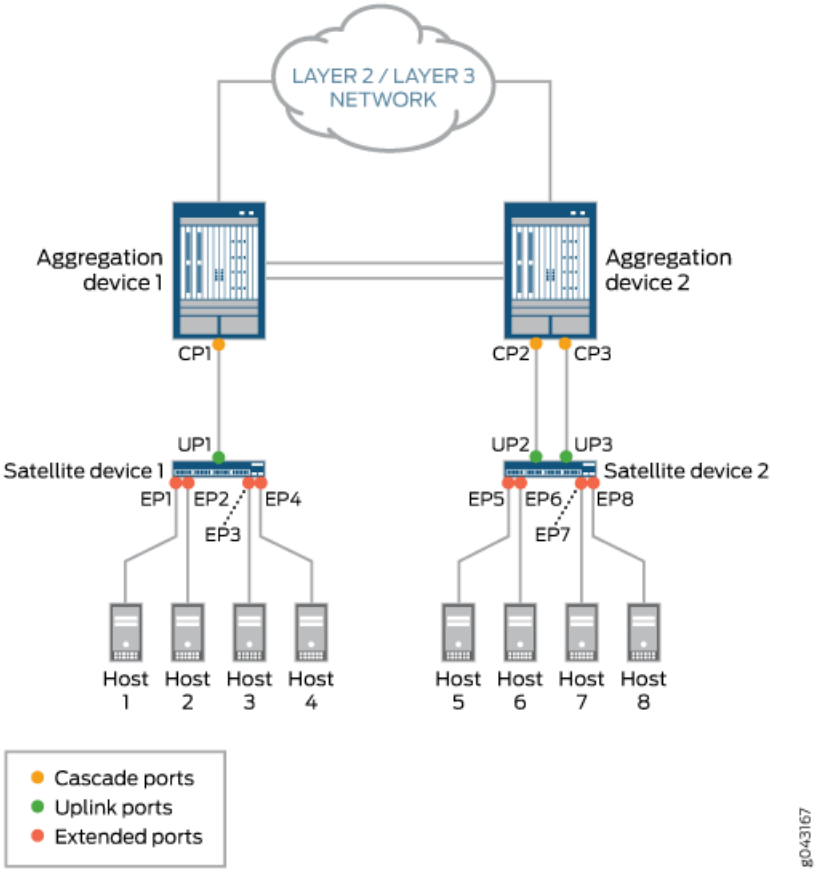

Figure 7: Cascade, Uplink, and Extended Ports in a Junos Fusion Data Center Topology With Four Aggregation Devices and EVPN

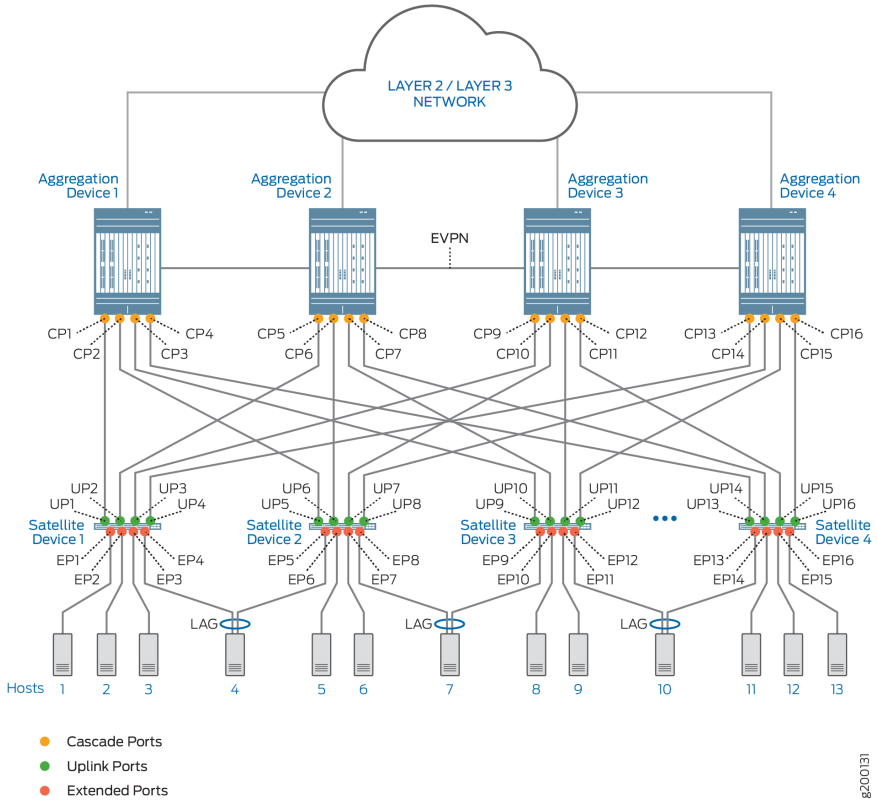

This topic provides the following information:

- Understanding Cascade Ports on page 14
- Understanding Uplink Ports on page 15
- Understanding Extended Ports on page 16

Understanding Cascade Ports

A *cascade port* is a physical interface on an aggregation device that provides a connection to a satellite device. A cascade port on an aggregation device connects to an uplink port on a satellite device.

On an aggregation device, you can set up one or more cascade port connections with a satellite device. For example, in the Junos Fusion topology shown in Figure 6 on page 13, Aggregation device 1 has one cascade port connection (CP1) to Satellite device 1, and Aggregation device 2 has two cascade port connections (CP2 and CP3) to Satellite device 2. In the Junos Fusion Data Center in Figure 7 on page 14, where EVPN multihoming is implemented, each aggregation device is connected to each satellite device through one cascade port. For example, on Aggregation device 1, cascade port CP1 is connected to the leftmost satellite device, cascade port CP2 is connected to the next satellite device, and so on.

When there are multiple cascade port connections to a satellite device, as shown in Figure 6 on page 13, the traffic handled by the ports is automatically load-balanced. For a packet destined for a satellite device, the cascade port over which to forward the packet is chosen based on a per-packet hash that is computed using key fields in the packet. To select the key fields to be used, you can specify the **hash-key** statement in the **[edit forwarding-options]** hierarchy or the **enhanced-hash-key** statement in the **[edit forwarding-options]**, **[edit logical-systems *logical-system-name* routing-instances *instance-name* forwarding-options]**, and **[edit routing-instances *instance-name* forwarding-options]** hierarchies.

NOTE: **The 802.1BR tag is not included in the load-balancing hash computation for cascade ports.**

In addition, a cascade port can handle the traffic for all extended ports on a particular satellite device. However, you cannot specify that a particular cascade port handle the traffic for a particular extended port.

After you configure an interface as a cascade port (for example, by issuing **set interfaces xe-0/0/1 cascade-port**), you cannot configure the interface as a Layer 2 interface (for example, by issuing **set interfaces xe-0/0/1 unit 0 family bridge**) or a Layer 3 interface (for example, **set interfaces xe-0/0/1 unit 0 family inet**). If you try to configure a cascade port as a Layer 2 or Layer 3 interface, you receive an error message.

On a cascade port, you can configure class-of-service (CoS) policies.

Understanding Uplink Ports

An *uplink port* is a physical interface on a satellite device that provides a connection to an aggregation device. An uplink port on a satellite device connects to a cascade port on an aggregation device.

After a cascade port is configured on the aggregation device end of a link, a corresponding uplink port is automatically created on the satellite device. From the aggregation device, you can monitor port and queue statistics for uplink ports. However, we do not recommend that you configure Layer 2 or Layer 3 forwarding features on uplink ports.

On a satellite device, you can set up one or more uplink port connections to an aggregation device. For example, in the Junos Fusion topology shown in Figure 6 on page 13, Satellite device 1 has one uplink port (UP1) to Aggregation device 1, and Satellite device 2 has two uplink ports (UP2 and UP3) to Aggregation device 2. In the Junos Fusion Data Center in Figure 7 on page 14, where EVPN multihoming is implemented, each satellite device is connected to each aggregation device through an uplink port. For example, on the leftmost satellite device, uplink port UP1 is connected to Aggregation device 1, uplink port UP2 is connected to Aggregation device 2, and so on.

When a satellite device has multiple uplink ports to an aggregation device, the traffic from the extended ports is automatically load-balanced among the uplink ports. For example, in the Junos Fusion topology shown in Figure 6 on page 13, the traffic from extended ports EP5 through EP8 is load balanced between uplink ports UP2 and UP3 to

reach Aggregation device 2. In this situation, each packet is examined, and if an IPv4 or IPv6 header is found, a load-balancing algorithm chooses the uplink port based on the header (source and destination IP addresses, and source and destination TCP/UDP ports). If an IPv4 or IPv6 header is not found, the load-balancing algorithm chooses the uplink port based on the Layer 2 header (destination and source MAC addresses, Ethertype, and outer VLAN ID) of the packet.

Understanding Extended Ports

An *extended port* is a physical interface on a satellite device that provides a connection to servers or endpoints. To an aggregation device, a satellite device appears as an additional Flexible PIC Concentrator (FPC) and the extended ports on the satellite device appear as additional interfaces to be managed by the aggregation device.

On aggregation devices, you can configure extended ports by using the same Junos OS CLI and naming convention used for Junos OS interfaces on standalone routers and switches. The only difference is that when you specify an extended port name, the FPC slot number must be in the range of 100 through 254 in Junos OS Release 14.2 and in the range of 65 through 254 in Junos OS Release 16.1 and later.

For example, for the four extended ports shown on Satellite device 1 in Figure 6 on page 13 and the leftmost satellite device in Figure 7 on page 14, the FPC slot number could be 100, the PIC slot number could be 0, the first extended port could be 1, the second extended port could be 2, the third extended port could be 3, and the fourth extended port could be 4. The complete 10-Gigabit Ethernet extended port names could be as follows:

xe-100/0/1

xe-100/0/2

xe-100/0/3

xe-100/0/4

You can configure the following features on extended ports:

- Layer 2 bridging protocols
- Integrated routing and bridging (IRB)
- Firewall filters

  NOTE: **In a Junos Fusion Data Center with EVPN wherein VXLAN encapsulation is used, firewall filters with next-interface or next-ip actions are not supported.**

- CoS policies

Related Documentation

- Understanding the Flow of Data Packets in a Junos Fusion Topology on page 37
- *hash-key*

- *enhanced-hash-key*

Understanding Software in a Junos Fusion Data Center

This topic discusses the role of software in a Junos Fusion Data Center. It covers:

Understanding Junos OS for the Aggregation Device in a Junos Fusion

An aggregation device in a Junos Fusion always runs Junos OS software and is responsible for almost all management tasks, including configuring all network-facing ports—the *extended ports*—on all satellite devices in the Junos Fusion. The extended ports in a Junos Fusion, therefore, typically support features that are supported by the version of Junos OS running on the aggregation device.

An aggregation device in a Junos Fusion runs the same Junos OS software regardless of whether it is or is not part of a Junos Fusion. Hence, Junos OS software is acquired, installed, and managed on an aggregation device in a Junos Fusion in the same manner that it is acquired, installed, and managed on a standalone device that is not part of a Junos Fusion.

NOTE: Before installing satellite software packages on a QFX10000 switch acting as an aggregation device, you must expand the /user disk partition to provide sufficient space for installing the software. To that end, you must issue the request system storage user-disk command once on each Routing Engine in your QFX10000 switch. (The QFX10002 switch supports one Routing Engine, and the QFX10008 and QFX10016 switches support two Routing Engines.)

Understanding Satellite Software for the Satellite Devices in a Junos Fusion

The satellite devices in a Junos Fusion run satellite software that has the built-in intelligence to extend features on the Junos OS software onto the satellite device. The satellite software is a Linux-based operating system that allows the satellite devices to communicate with the aggregation device for control plane data while also passing network traffic.

All satellite devices in a Junos Fusion must run the satellite software.

Different satellite devices can run different versions of satellite software within the same Junos Fusion.

You can download satellite software from the software center for any satellite device. See the Junos Fusion Hardware and Software Compatibility Matrices, which provides software requirements as well as links to satellite device and Junos OS software. Additionally, you have the option to order some switches with the satellite software preinstalled from the factory.

The satellite software packages are stored on the aggregation device after a satellite software package installation—which is typically managed from the aggregation device—has been executed. The satellite software packages remain in the file system even if the Junos OS on the aggregation device is upgraded. The satellite software packages on an individual satellite device can be updated manually using CLI commands on the aggregation device but are typically installed using software upgrade groups, which are discussed in more detail in this document.

A device cannot simultaneously run Junos OS and the satellite software. If you remove a satellite device from a Junos Fusion, you have to install the Junos OS onto the device before you can use it in your network as a standalone switch.

Satellite software is sometimes referred to as satellite network operating system (SNOS) software in the command-line interface and in the technical documentation.

The satellite software requirements for a Junos Fusion Data Center are discussed in Understanding Junos Fusion Data Center Software and Hardware Requirements.

Understanding Satellite Software Upgrade Groups

A *satellite software upgrade group* is a group of satellite devices that are designated to upgrade to the same satellite software version using the same satellite software package. One Junos Fusion can contain multiple software upgrade groups, and multiple software upgrade groups should be configured in most Junos Fusions to avoid network downtimes during satellite software installations.

When a satellite device is added to a Junos Fusion, the aggregation device checks if the satellite device is using an FPC ID that is included in a satellite software upgrade group. If the device is connected to a satellite device that is using an FPC ID that is part of a satellite software upgrade group, the device—unless it is already running the same version of satellite software—upgrades its satellite software using the satellite software associated with the satellite software upgrade group.

When the satellite software package associated with an existing satellite software group is changed, the satellite software for all member satellite devices is upgraded using a throttled upgrade. The throttled upgrade ensures that only a few satellite devices are updated at a time to minimize the effects of a traffic disruption due to too many satellite devices upgrading software simultaneously.

The two most common methods of installing satellite software—autoconverting a device into a satellite device when it is cabled into an aggregation device and manually converting a device that is cabled into an aggregation device into a satellite device—require the presence of a configured satellite software upgrade group.

Software upgrade groups are configured and managed on the aggregation device.

Understanding Satellite Software Requirements in a Multiple Aggregation Device Topology

The configuration of a satellite software upgrade group entails the following:

- Creating the software upgrade group.
- Identifying satellite devices that are members of the software upgrade group.

The configuration of a software upgrade group must be the same on each aggregation device. To ensure that a configuration is the same, we recommend using the configuration synchronization feature. For more information about this feature, see "Understanding Configuration Synchronization in a Junos Fusion" on page 20.

After the software upgrade group is configured and synchronized on each aggregation device, you must associate a satellite software image with the group.

For the software to be successfully upgraded on the satellite devices in the software upgrade group, the following conditions must be met:

- The same software upgrade group members must be configured on all aggregation devices.
- When you associate a software version with the software upgrade group on one aggregation device, one of the following conditions must exist:
  - The same software version is associated with the software upgrade group on the other aggregation devices.
  - A software version is not yet associated with the software upgrade group on the other aggregation devices.

Understanding the PPC Satellite Software Image

The PPC satellite software package is required to install satellite software onto an EX4300 switch that is not connected to an aggregation device.

Use the PPC satellite software package when you want to manually install satellite software onto an EX4300 switch using the **request chassis device-mode satellite *URL-to-satellite-software*** command before you interconnect that switch into a Junos Fusion.

You can identify the PPC version of the satellite software by looking for the *satellite-ppc* prefix in the satellite software image name; for example, **satellite-ppc-3.4R2.0-signed.tgz**.

Related Documentation

- Junos Fusion Hardware and Software Compatibility Matrices
- Understanding Junos Fusion Data Center Software and Hardware Requirements
- Configuring or Expanding a Junos Fusion Data Center on page 47

Understanding Configuration Synchronization in a Junos Fusion

All configuration and management for a Junos Fusion are done from the aggregation devices. which run Junos OS software.

In a Junos Fusion with one aggregation device, all configuration—whether it's a configuration statement that enables a feature globally or enables a feature on a specific extended port—is done from the lone aggregation device.

A Junos Fusion with multiple aggregation devices often requires that the configuration of a feature—for example, an extended port, and entities such as routing instances and VLANs that include the extended port—must match on all aggregation devices. If a configuration statement for the feature—in this case, the extended port—is specified differently on one aggregation device, the statement on that particular aggregation device might be implemented in an unpredictable manner or might not be implemented at all.

Junos Fusion supports configuration synchronization, a feature that allows users to specify configuration statements within a group on one aggregation device and then share that group with other aggregation devices.

We strongly recommend using configuration synchronization to configure software features in multiple aggregation device topologies. Configuration synchronization ensures configuration consistency by sharing the exact same configuration between aggregation devices. Configuration synchronization also simplifies administration of a Junos Fusion by allowing users to enter configuration statements once in a configuration group and apply the configuration group to all aggregation devices rather than repeating a configuration procedure manually on each aggregation device.

For more information about configuration synchronization, see "Enabling Configuration Synchronization Between Aggregation Devices in a Junos Fusion" on page 43, Understanding MC-LAG Configuration Synchronization, and Synchronizing and Committing MC-LAG Configurations.

See *Enabling Junos Fusion Enterprise on an Enterprise Campus Network* for a sample Junos Fusion Enterprise topology configured largely using configuration synchronization. See *Enterprise Data Center: Junos Fusion Data Center Architecture* for a sample Junos Fusion Data Center topology largely configured using configuration synchronization.

Configuration Synchronization and Aggregation Devices with Two Routing Engines in a Junos Fusion Data Center with EVPN

QFX10008 and QFX10016 switches, which support two Routing Engines, can function as aggregation devices in a Junos Fusion Data Center with EVPN. When a configuration group is applied to a QFX10008 or QFX10016 switch, the configuration must be shared with both Routing Engines on the switch.

You can identify each Routing Engine by configuring an IP address for the Routing Engine in slot 0 (re0) and another IP address for the Routing Engine in slot 1 (re1). We recommend

using management interface em0.0 for both re0 and re1, which you can configure using configuration groups for re0 and re1. For example:

```
[edit]
user@aggregation-device-1# set groups re0 interfaces em0 unit 0 family inet address
172.16.75.10/24
user@aggregation-device-1# set groups re1 interfaces em0 unit 0 family inet address
172.16.75.20/24
```

When applying a configuration group to a Routing Engine, you must specify the IP address assigned to the Routing Engine. For example, if a Junos Fusion Data Center with an EVPN architecture has four QFX10008 switches that serve as aggregation devices, you can apply a configuration group named overlay to Routing Engines re0 and re1 on each aggregation device as follows. This configuration is performed on aggregation device-1 (ad-1):

```
[edit]
user@aggregation-device-1# set groups overlay when peers 172.16.75.10 (ad-1, re0)
user@aggregation-device-1# set groups overlay when peers 172.16.75.20 (ad-1, re1)
user@aggregation-device-1# set groups overlay when peers 172.16.75.30 (ad-2, re0)
user@aggregation-device-1# set groups overlay when peers 172.16.75.40 (ad-2, re1)
user@aggregation-device-1# set groups overlay when peers 172.16.75.50 (ad-3, re0)
user@aggregation-device-1# set groups overlay when peers 172.16.75.60 (ad-3, re1)
user@aggregation-device-1# set groups overlay when peers 172.16.75.70 (ad-4, re0)
user@aggregation-device-1# set groups overlay when peers 172.16.75.80 (ad-4, re1)
```

Related Documentation

- Enabling Configuration Synchronization Between Aggregation Devices in a Junos Fusion on page 43
- *Enabling Junos Fusion Enterprise on an Enterprise Campus Network*
- *Enterprise Data Center: Junos Fusion Data Center Architecture*

Understanding Junos Fusion Data Center Software and Hardware Requirements

This topic describes the software and hardware requirements for a Junos Fusion Data Center. See Understanding Junos Fusion Provider Edge Software and Hardware Requirements or Understanding Junos Fusion Enterprise Software and Hardware Requirements for the software and hardware requirements for a Junos Fusion Provider Edge or a Junos Fusion Enterprise.

It covers:

Aggregation Device to Satellite Device Software Compatibility

A Junos Fusion Data Center includes an aggregation device or devices running Junos OS and satellite devices running satellite software. The version of Junos OS running on the

aggregation device must be compatible with the satellite software versions running on the satellite device in order for the Junos Fusion Data Center to function.

See Junos Fusion Hardware and Software Compatibility Matrices for software compatibility information for any Junos Fusion Data Center.

NOTE: When you upgrade the satellite software version to a release later than the recommend versions listed in the Junos Fusion Hardware and Software Compatibility Matrices, your Junos Fusion system will only benefit from the satellite software fixes. To acquire the full benefits of a satellite software release, including satellite software fixes and new features, we recommend you upgrade both the aggregation device software and its compatible satellite device software for a complete upgrade.

Aggregation Devices

This section details the hardware and software requirements for an aggregation device in a Junos Fusion Data Center. It covers:

- Aggregation Device Hardware Models on page 22
- Maximum Number of Aggregation Devices on page 22
- Cascade Ports on page 23

Aggregation Device Hardware Models

Table 3 on page 22 lists the hardware platforms that are supported as aggregation devices for a Junos Fusion Data Center. It also lists the Junos OS release where support for the aggregation device in a Junos Fusion Data Center was introduced.

Table 3: Supported Aggregation Device Hardware and Initial Junos OS Release

Hardware	Initial Junos OS Release
QFX10002-36Q Switch	17.2R1
QFX10002-72Q Switch	17.2R1
QFX10008 Switch	18.1R2-S2
QFX10016 Switch	18.1R2-S2

Maximum Number of Aggregation Devices

A Junos Fusion Data Center can support up to four aggregation devices. A Junos Fusion Data Center with more than two aggregation devices requires an EVPN-based architecture. See "Understanding Junos Fusion Data Center Components" on page 6.

Cascade Ports

A *cascade port* is a port on an aggregation device that sends and receives control and network traffic from an attached satellite device.

Table 4 on page 23 provides a list of interface types on a QFX10002 switch that can be converted into cascade ports, and the initial Junos OS release that introduced cascade port support for each interface type.

Table 4: QFX10002 Switch Cascade Port Support

Aggregation Device Switch Model	Interface Type	Initial Junos OS Release
QFX10002-36Q Switch	10-Gbps and 40-Gbps	17.2R1
	100-Gbps	18.1R2-S2
QFX10002-72Q Switch	10-Gbps and 40-Gbps	17.2R1
	100-Gbps	18.1R2-S2

Table 5 on page 23 provides a list of line cards on a QFX10008 or QFX10016 switch that have interfaces that can be converted into cascade ports, and the initial Junos OS release that introduced cascade port support for interfaces on the line card.

Table 5: Line Cards on QFX10008 or QFX10016 Switch Cascade Port Support

Line Card	Switch Model	Initial Junos OS Release
• QFX10000-36Q • QFX10000-30C	QFX10008	18.1R2-S2
	QFX10016	18.1R2-S2

Satellite Devices

This section details the hardware and software requirements for a satellite device in a Junos Fusion Data Center. It covers:

- Satellite Device Hardware Models on page 23
- Satellite Software to Junos OS Conversion Requirements on page 24
- Maximum Number of Satellite Devices or Extended Ports on page 24

Satellite Device Hardware Models

Table 6 on page 24 lists the hardware platforms that are supported as satellite devices for a Junos Fusion Data Center and the Junos OS Release in which support was introduced.

NOTE: To find the required satellite software version, as well as the minimum Junos OS release that must be running on the switch before it can be converted from a standalone Junos OS device to a Junos Fusion satellite device, see Junos Fusion Hardware and Software Compatibility Matrices.

Table 6: Supported Satellite Device Hardware and Initial Junos OS Release

Hardware	Support as Satellite Device Introduced in Junos OS Release
EX4300-24T	17.2R1
EX4300-32F	17.2R1
EX4300-48T	17.2R1
QFX5100-24Q	17.2R1
QFX5100-48S	17.2R1
QFX5100-48SH	17.2R1
QFX5100-48TH	17.2R1
QFX5100-48T	17.2R1
QFX5100-96S	17.2R1
QFX5110-48S	18.1R2-S2
QFX5200-32C	18.1R2-S2

Satellite Software to Junos OS Conversion Requirements

A satellite device can be removed from a Junos Fusion Enterprise and reinserted into a network as a switch running Junos OS. See "Converting a Satellite Device in a Junos Fusion to a Standalone Device" on page 128.

A device running satellite software must be converted to a version of Junos OS that supports satellite device conversion. For the minimum Junos OS versions that support satellite device conversion, see Junos Fusion Hardware and Software Compatibility Matrices.

Maximum Number of Satellite Devices or Extended Ports

A Junos Fusion Data Center supports up to 64 satellite devices.

Related Documentation

- Junos Fusion Hardware and Software Compatibility Matrices
- Configuring or Expanding a Junos Fusion Data Center on page 47

Understanding ICCP in a Junos Fusion using Dual Aggregation Devices

This topic describes the Inter-Chassis Control Protocol (ICCP) in a Junos Fusion. It covers:

- ICCP in a Junos Fusion Overview on page 25
- Automatic ICCP Provisioning on page 25

ICCP in a Junos Fusion Overview

Inter-Chassis Control Protocol (ICCP) is used in MC-LAG topologies to exchange control information between the devices in the topology. See Multichassis Link Aggregation Features, Terms, and Best Practices for additional information on ICCP.

A Junos Fusion with two aggregation devices is an MC-LAG topology, and is therefore always running ICCP as the control protocol. A Junos Fusion using a single aggregation device is not an MC-LAG topology and does not run ICCP.

A dedicated ICCP link is highly recommended in a Junos Fusion deployment, but is not required. ICCP traffic is transmitted across the ICL when an ICCP link is not configured. An ICCP link can be one link or an aggregated ethernet interface. In most Junos Fusion deployments, we recommend using a 40-Gbps link or an aggregated ethernet interface as the ICCP link.

Automatic ICCP Provisioning

Junos Fusion supports automatic ICCP provisioning, which automatically configures ICCP in a dual aggregation device setup without any user action. Automatic ICCP provisioning is enabled by default and is often the preferred method of enabling ICCP for a Junos Fusion in greenfield deployments that are not being integrated into an existing network. If you are installing your Junos Fusion in an environment that doesn't have to integrate into an existing campus network, you can usually ignore manual ICCP configuration processes and allow automatic ICCP provisioning to enable ICCP. Automatic ICCP provisioning is described in more detail in Understanding Automatic ICCP Provisioning and Automatic VLAN Provisioning of an Interchassis Link.

Many Junos Fusion installations occur in brownfield deployments and the Junos Fusion has to be integrated into an existing network. Brownfield deployments often have a need to maintain existing ICCP settings, in particular in scenarios where a Junos Fusion is replacing an MC-LAG topology or is supporting a network that includes other MC-LAG topologies. ICCP must be configured manually in these scenarios.

See *Enabling Junos Fusion Enterprise on an Enterprise Campus Network* for an example of a Junos Fusion Enterprise deployment that manually configures ICCP. See *Configuring Multichassis Link Aggregation on EX Series Switches* for comprehensive information on configuring ICCP manually.

Related Documentation

- *Enabling Junos Fusion Enterprise on an Enterprise Campus Network*
- Multichassis Link Aggregation Features, Terms, and Best Practices
- *Configuring or Expanding a Junos Fusion Enterprise*

Understanding EVPN in a Junos Fusion Data Center

Starting with Junos OS Release 18.1R2-S2, Junos Fusion Data Center introduces an Ethernet VPN (EVPN) architecture wherein each satellite device is multihomed for redundant connectivity in active-active mode to four aggregation devices. In this topology, the four aggregation devices comprise a core fabric in which EVPN is used to learn about the aggregation devices and advertise host and server MAC addresses, network reachability information, and other states among the aggregation devices.

Junos Fusion Data Center with EVPN implements IEEE 802.1BR processing between the aggregation devices and satellite devices.

The following sections cover relevant EVPN implementation details and areas in which the EVPN implementation is specific to Junos Fusion Data Center:

Benefits of Junos Fusion Data Center with EVPN

- Supports an architecture that enables you to multihome satellite devices to multiple aggregation devices for maximum up time and resiliency.
- Traffic traversing the Junos Fusion Data Center can be load balanced across all aggregation devices.
- Maintains a high level of redundancy. In the unexpected event of an aggregation device failure, the Junos Fusion Data Center retains 75 percent of its capacity to continue routing traffic.
- Automatic generation of Ethernet segment identifiers (ESIs).
- Despite the large number of extended ports supported, in a Junos Fusion Data Center, there are a maximum of four aggregation devices that you must access to manage the ports.
- Implements the open standards-based EVPN protocol, which opens the possibility of aggregation devices interoperating with networking devices from other vendors.

EVPN Ethernet Segments

When implementing an EVPN core fabric in Junos Fusion Data Center, it is important to understand the concept of *Ethernet segments*, which can be one of the following:

- A standalone extended port.
- A link aggregation group (LAG) of extended ports. For more information about LAGs of extended ports, see "Understanding Link Aggregation and Link Aggregation Control Protocol in a Junos Fusion" on page 873.

In the Junos Fusion Data Center topology shown in Figure 8 on page 27, four satellite devices are multihomed to four aggregation devices. Figure 8 on page 27 also shows hosts connected to satellite devices through a mix of standalone extended ports and LAGs of extended ports. For example, host 1 is single-homed to satellite device 1 by standalone extended port EP1, and host 4 is multihomed to satellite devices 1 and 2 by a LAG of extended ports, which includes extended port EP4 on satellite device 1 and extended port EP5 on satellite device 2.

Figure 8: Junos Fusion Data Center Topology With EVPN: Ethernet Segments

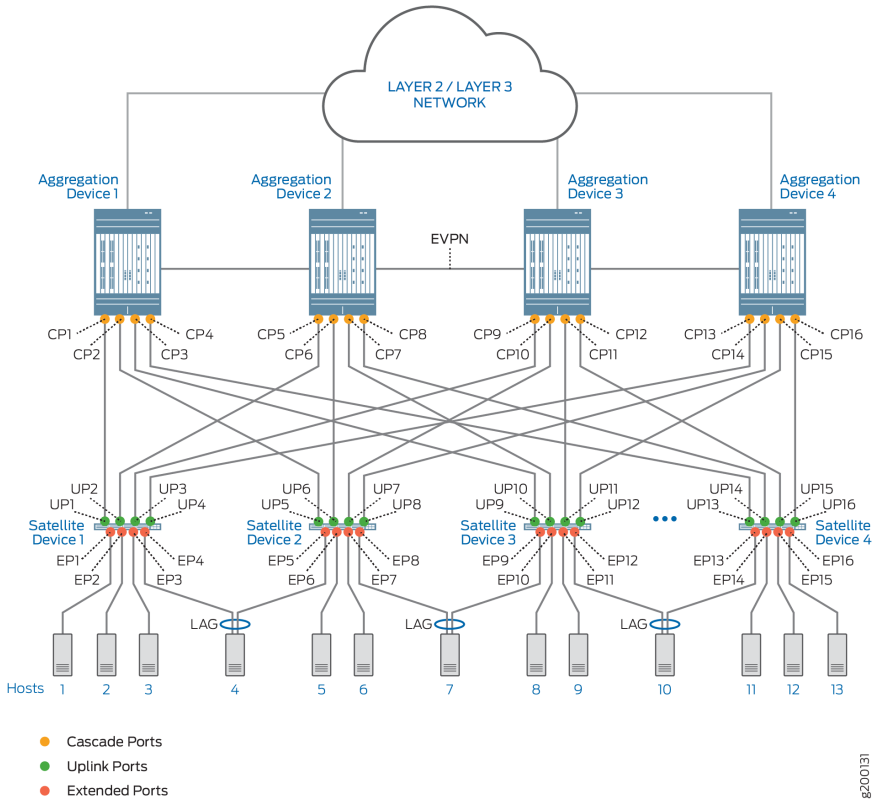

For each Ethernet segment, Junos Fusion Data Center automatically generates a unique 10-octet ESI. For standalone extended ports, the automatic generation of each ESI is based on extended port attributes such as the MAC address and slot ID of the satellite device, and the extended port ID. Although the satellite device attributes are common to all standalone extended ports associated with the same satellite device, the extended port ID makes the ESI and, therefore, the Ethernet segment itself unique.

For a LAG of extended ports, the ESI is based on attributes such as the redundancy group of which the LAG is a part and a global LAG interface identifier.

A sample ESI is 00:01:01:00:00:00:00:00:00:04.

The automatic generation of ESIs in a Junos Fusion Data Center frees you from manually configuring a large number of ESIs and prevents the possibility of inadvertently configuring the same ESI for multiple Ethernet segments.

The purpose of implementing Ethernet segments and their unique ESIs in the Junos Fusion Data Center is to identify the standalone and LAGs of extended ports.

After you finish performing a basic EVPN configuration for Junos Fusion Data Center, ESIs appear in the output of such EVPN-related command summaries as **show evpn instance extensive** commands, and BGP starts to advertise ESIs along with EVPN routes. For more information about a basic EVPN configuration for Junos Fusion Data Center, see "Configuring or Expanding a Junos Fusion Data Center" on page 47.

EVPN Instance

QFX Series switches that function as aggregation devices in the Junos Fusion Data Center are preconfigured with a single default-switch routing instance. The EVPN core fabric configuration—for example, the configuration of route targets, VLANs, and so on—on an aggregation device must be part of this routing instance. Therefore, when configuring EVPN, make sure not to define EVPN-related route targets, VLANs, and so on under an explicitly configured virtual-router routing instance (**set routing-instances *name* instance-type virtual-router**).

In the context of Junos Fusion Data Center, the default-switch routing instance is known as the *EVPN instance*. Junos Fusion Data Center supports a single EVPN instance. To support Ethernet VLAN services with a single EVPN instance, Junos Fusion Data Center supports the use of VLAN-aware bundle service. This service enables you to map the EVPN instance to many VLANs, each of which has its own bridging table.

Note the following about the VLANs that are mapped to the EVPN instance:

- Junos Fusion Data Center does not support VLAN translation. Therefore, each VLAN is represented by a single VLAN ID.
- All EVPN routes that include an Ethernet Tag ID field have the value of that field set to a VLAN ID.
- An extended port can be mapped to one or more VLANs.

EVPN Control Plane

The four aggregation devices in the Junos Fusion Data Center implement an EVPN control plane. As part of this control plane, after the system automatically generates ESIs for extended ports, BGP discovers and signals the extended ports in the topology. Most of the signaling of the extended ports and the implementation of EVPN network layer reachability information (NLRI) routes follow standard EVPN processes. The following subsections discuss the EVPN control plane infrastructure and how Junos Fusion Data Center implements EVPN NLRI routes.

Aggregation Devices as IBGP Peers

In a Junos Fusion Data Center, the IP underlay network is made up of the following entities:

- Aggregation devices, which are identified by IP addresses that you assign to their loopback interfaces.
- OSPF, which you configure to route between the aggregation devices.

All aggregation devices in Junos Fusion Data Center form Multiprotocol IBGP (MP-IBGP) peerings in a single BGP autonomous system (AS). As IBGP peers, the aggregation devices share network reachability information with adjacent aggregation devices using BGP Multiprotocol Extensions (RFC4760) with an address family identifier (AFI) of 25 (L2VPN) and a subsequent address family identifier (SAFI) of 70 (EVPN).

BEST PRACTICE: **With a relatively small number of IBGP peers, we recommend a full-mesh interconnection of IBGP peers instead of using a BGP route reflector to act as a focal point for the IBGP peers.**

Satellite devices run in IEEE 802.1BR mode and do not establish IBGP peerings.

Learning About Extended Ports Through Ethernet Autodiscovery Routes

For each extended port to which an aggregation device is directly connected, the aggregation device originates per-Ethernet segment and per-EVPN instance (EVI) autodiscovery routes. The per-Ethernet segment autodiscovery routes advertise NLRI information about a particular Ethernet segment in an EVI, while the per-EVI autodiscovery routes advertise NLRI information about all Ethernet segments in an EVPN instance.

For general information about BGP NLRIs, including the Ethernet autodiscovery routes discussed in this section, see *EVPN Multihoming Overview*. This section provides Junos Fusion Data Center-specific information about the Ethernet autodiscovery routes.

Junos Fusion Data Center uses per-EVI autodiscovery routes for the following reasons:

- In case a cascade port fails and an aggregation device cannot resolve the next hop for an extended port to a local cascade port. When this situation occurs, Junos Fusion Data Center resolves the next hop to each aggregation device that advertised that it can reach the extended port. After Junos Fusion Data Center is aware that each aggregation device can reach the extended port, data traffic destined for the extended port is load balanced between the aggregation devices.

  NOTE: **In the cascade port failure scenario, Junos Fusion Data Center uses a combination of per-Ethernet segment and per-EVI autodiscovery routes.**

- For the EVPN aliasing mechanism, which provides load-balancing information for remote EVPN peers, even if all aggregation devices do not advertise a particular MAC address.

Table 7 on page 30 provides attributes of the Ethernet autodiscovery routes and how the attribute fields are populated for each route type.

Table 7: Per-Ethernet Segment and per-EVI Ethernet Autodiscovery Route Format

Type of Ethernet Autodiscovery Route	Route Distinguisher	ESI	Ethernet Tag ID	MPLS Label
Per-Ethernet segment*	Loopback IP address of aggregation device	ESI of the Ethernet segment	MAX-ET (0xFFFFFFFF)	0
Per-EVI	• IP address of aggregation device • Discriminator value based on the EVI	ESI of each Ethernet segment in an EVI.	0	0

*Because Junos Fusion Data Center supports only a single EVPN instance, the per-Ethernet segment autodiscovery route includes only one EVI route target attribute.

Learning About Extended Ports Through EVPN Type 4 Routes

In a Junos Fusion Data Center, EVPN Type 4 Ethernet segment routes enable an aggregation device associated with an Ethernet segment to discover the other aggregation devices associated with the same Ethernet segment.

Ethernet segment routes include the ES-import route target extended community. The type field of this extended community is set to 0x06, which indicates that the value is a route target specified as a MAC address. In the type field, Junos Fusion Data Center automatically sets the route target value to the MAC address of the satellite device that is associated with the Ethernet segment.

All aggregation devices connected to the same extended port advertise the same route target membership information. Based on this premise, Junos Fusion Data Center implements a route target constraint process that limits the advertisement of Ethernet segments only to the aggregation devices that are associated with the same route target. This constraint prevents the needless distribution of routes to aggregation devices that are not connected to particular extended ports.

In an EVPN network that is not implemented in a Junos Fusion Data Center, the Ethernet segment route is a factor in electing designated forwarders (DFs), which forward broadcast, unknown unicast, and multicast (BUM) traffic. When the local replication feature is configured, Junos Fusion Data Center uses a proprietary mechanism that better accommodates the potentially large number of extended ports. To that end, Junos Fusion Data Center implements the DF election mechanism for extended ports at the satellite-device level.

Learning Host MAC Addresses Through EVPN Type 2 Routes

In a Junos Fusion Data Center, an aggregation device learns the MAC addresses of hosts that are connected to extended ports. When an aggregation device learns a host MAC address locally, the aggregation device originates an EVPN type 2 MAC/IP advertisement route and distributes the route to the other aggregation devices.

Junos Fusion Data Center implements the route distinguisher field In the EVPN type 2 MAC/IP advertisement route as a type-1 value. This value is comprised of the IP address

of the aggregation device that learned the MAC address followed by a 12-bit VLAN ID. Because Junos Fusion Data Center does not support VLAN translation, all aggregation devices use the same VLAN ID for this route.

Junos Fusion Data Center supports a single EVPN instance and the VLAN-aware bundle service, which in turn supports multiple VLANs, and therefore, multiple bridging tables. As a result, Junos Fusion Data Center implements the Ethernet Tag ID field as a non-zero value, namely, a 24-bit VXLAN network identifier (VNI) that maps to the VLAN associated with the route.

The EVPN type 2 MAC/IP advertisement route also includes route target attributes, for which Junos Fusion Data Center supplies a route target value. If you specified **vrf-target auto** at the [**edit switch-options**] hierarchy level, this value is automatically generated.

EVPN and IEEE 802.1BR Forwarding

In the EVPN core fabric, Junos Fusion Data Center implements EVPN forwarding, while in the fabric between the aggregation and satellite devices, it implements IEEE 802.1BR forwarding.

Data Encapsulation

The EVPN core fabric of a Junos Fusion Data Center uses Virtual Extensible LAN (VXLAN) encapsulation. As a result, when an aggregation device forwards a Layer 2 data packet to another aggregation device, the packet is encapsulated in a VXLAN UDP header and transported over the Layer 3 network.

Figure 9 on page 31 graphically depicts the VXLAN tunnels through which data packets are forwarded between the aggregation devices. The aggregation devices at each end of a tunnel function as VXLAN tunnel endpoints (VTEPs). Depending on the flow of packets, one aggregation device functions as a source VTEP that encapsulates the packet in the VXLAN UDP header, and the destination VTEP de-encapsulates the packet.

Figure 9: Junos Fusion Data Center Topology With EVPN: VXLAN Tunnels

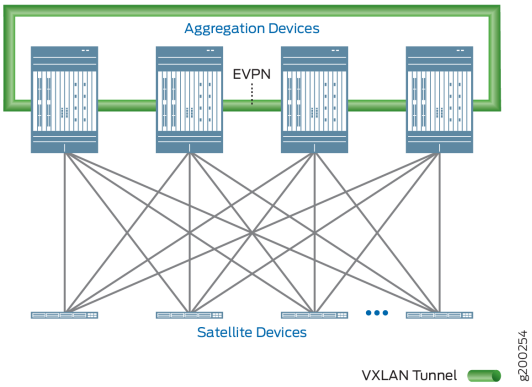

When configuring a VLAN, you must also configure a VNI that maps to that VLAN. In a Junos Fusion Data Center with EVPN-VXLAN, the VNI is used as follows:

- When a data packet is encapsulated in a VXLAN header, the VNI is included in the header.
- In a EVPN type 2 MAC/IP advertisement route, the VNI is included in the Ethernet tag ID field.

Layer 3 Default Gateway

Non-virtualized (bare-metal) servers connected to extended ports use a default Layer 3 gateway to route their traffic from one VLAN to another non-virtualized server or virtual machine (VM) in another VLAN. On an aggregation device, you enable the default gateway functionality by configuring an integrated routing and bridging (IRB) interface with a virtual gateway address (VGA). Specifying a VGA configures the IRB interface as a default Layer 3 gateway.

BEST PRACTICE: In a Junos Fusion Data Center, we recommend enabling the default gateway functionality on each aggregation device. We also recommend specifying the same VGA, which is an IP address, on each aggregation device.

When you specify an IPv4 address for the VGA, the aggregation device automatically generates 00:00:5e:00:01:01 as the media access control (MAC) address for the default gateway. When you specify an IPv6 address, the aggregation device automatically generates 00:00:5e:00:02:01 as the MAC address for the default gateway. If needed, you can explicitly configure an IPv4 or IPv6 MAC address for a default gateway by using the **virtual-gateway-v4-mac** or **virtual-gateway-v6-mac** configuration statement at the **[edit interfaces name irb unit logical-unit-number]** hierarchy level. After you perform this configuration, the automatically generated MAC address is overridden by the configured MAC address. Regardless of how a default gateway acquires its MAC address, we recommend that each default gateway has the same MAC address.

NOTE: Junos Fusion Data Center does not support the configuration of the same IP address for all IRB interfaces.

EVPN type 2 MAC/IP advertisement routes that include the default gateway extended community advertise default gateway information.

ARP Processing

In a Junos Fusion Data Center, Address Resolution Protocol (ARP) works as follows:

- **Proxy ARP**—Junos Fusion Data Center uses EVPN type 2 MAC/IP advertisement routes to learn and propagate host MAC and IP bindings. That is, aggregation devices originate EVPN type 2 MAC/IP advertisement routes, which include host MAC and IP addresses, and distribute the routes to other aggregation devices in the Junos Fusion Data Center. After all aggregation devices learn the MAC and IP address binding for a particular

host, any aggregation device in the Junos Fusion Data Center can act as a proxy and respond to ARP requests to determine the MAC address bound to a particular IP address. By using this mechanism, Junos Fusion Data Center reduces the flooding of ARP packets to hosts and aggregation devices.

- **ARP request for address of Layer 3 default gateway**—When a host sends an ARP request for the address of a default Layer 3 gateway, the aggregation device that receives the request sends a reply with the target MAC address set to the MAC address of the default gateway.
- **IP packet handling**—When an aggregation device receives an IP packet on an IRB interface, the device performs a destination IP lookup. The lookup results indicate whether the aggregation device forwards the packet from one of its local ports or encapsulates the packet with a VXLAN header and forwards the packet toward the destination aggregation device.

  At the same time, if the destination host's MAC address is not known, the aggregation device originates and sends an ARP request. If the aggregation device that receives the ARP reply is different than the one that originated it, the receiving aggregation device sends an EVPN type 2 MAC/IP advertisement to the other aggregation devices, thereby propagating the destination host's MAC address.

Inter-VLAN Packet Handling

In a Junos Fusion Data Center, the forwarding of a packet from one VLAN to another by way of an IRB interface works as follows:

- The aggregation device that receives the packet from an extended port, also known as the *source aggregation device*, performs a destination IP lookup and rewrites the incoming VLAN to the destination VLAN.
- If the lookup results indicate that the next hop extended port cannot be resolved to a local cascade port, the source aggregation device encapsulates the packet with a VXLAN header and forwards the packet toward a destination aggregation device. The destination aggregation device is determined by way of equal-cost multipath (ECMP) and load balancing. Upon receipt of the packet, the destination aggregation device processes the Layer 2 packet.

Release History Table

Release	Description
18.1R2-S2	Starting with Junos OS Release 18.1R2-S2, Junos Fusion Data Center introduces an Ethernet VPN (EVPN) architecture wherein each satellite device is multihomed for redundant connectivity in active-active mode to four aggregation devices. In this topology, the four aggregation devices comprise a core fabric in which EVPN is used to learn about the aggregation devices and advertise host and server MAC addresses, network reachability information, and other states among the aggregation devices.

Understanding Designated Event Forwarding of SNMP Traps in an EVPN Junos Fusion Data Center

Designated Event Forwarding in an EVPN Junos Fusion Overview

Starting with Junos OS Release 18.1R2-S2, you can enable SNMP on the aggregation device and designate SNMP trap forwarding in an EVPN topology in a Junos Fusion. In an EVPN topology, the satellite device generates an SNMP trap event when a change occurs on any of the associated satellite devices. This trap event information is sent to all connected aggregation devices who then send the trap request to the SNMP server. Because each aggregation device sends its own copy of the trap, the SNMP server receives multiple copies of the trap for the same event on the satellite device causing overhead to the SNMP server.

To prevent the SNMP trap from being generated from each aggregation device, you can enable **designated-event-forwarding** so that the trap request is only sent by the aggregation device selected as the designated router. When enabled, the aggregation device generates a trap request to the local snmp daemon. Otherwise, the trap event is ignored. You enable designated event forwarding under the [edit chassis **satellite-management**] hierarchy level. Designated event forwarding is disabled by default.

See *Understanding SNMP Implementation in Junos OS* for information on configuring SNMP.

See "Understanding EVPN in a Junos Fusion Data Center" on page 26 for a detailed overview of Junos Fusion Data Center with EVPN.

Limitations for Designated Event Forwarding of SNMP traps in an EVPN Junos Fusion

Consider the following limitations when you configure designated trap forwarding on SNMP traps:

- When the satellite device boots up, the FPC *online* trap is seen on the aggregation devices until the EVPN topology is converged and the designated forwarder information is updated.

- When the satellite device is powered off or rebooted, the FPC *offline* trap is seen on all aggregation devices because the designated forwarder information for the satellite device is unavailable.

Release History Table

Release	Description
18.1R2-S2	Starting with Junos OS Release 18.1R2-S2, you can enable SNMP on the aggregation device and designate SNMP trap forwarding in an EVPN topology in a Junos Fusion

Related Documentation

- designated-event-forwarding on page 85
- satellite-management on page 98
- Understanding EVPN in a Junos Fusion Data Center on page 26

Understanding Layer 2 Unicast Forwarding in a Junos Fusion Data Center

This topic discusses how Layer 2 unicast forwarding works on extended ports in a Junos Fusion Data Center with EVPN-VXLAN. It covers the following items:

Cascade Interface Resolution

When a remote MAC address is learned from a Type-2 MAC route advertisement, the aggregation device determines the corresponding extended port next hop from the Ethernet Segment Identifier (ESI) carried in the MAC route advertisement. This extended port next hop is resolved in the set of local cascade interfaces that are used to reach that extended port.

BGP Next-hop Resolution

Traffic sent to destination extended port only traverses the EVPN tunnel if the destination extended port cannot be resolved to a local cascade interface. For non-extended port destinations located on a remote aggregation device (or external Provider Edge (PE) device in the same EVPN), traffic is carried in the EVPN tunnel. When EVPN MAC aliasing is enabled, aggregation devices signal their reachability towards the destination extended port using the per-EVI Ethernet A-D route, so that a list of aggregation devices can be built for load-balancing even if those aggregation devices have not advertised that specific MAC route.

Layer 2 Unicast Traffic over a VXLAN Tunnel

When an aggregation device sends traffic to a destination on a remote aggregation device, it encapsulates the original Ethernet frame with a VXLAN header, a UDP header,

and the IP and Ethernet headers corresponding to the destination VTEP located on the destination aggregation device.

Understanding Satellite Policies in a Junos Fusion

This topic describes satellite policies in a Junos Fusion. It covers:

Satellite Policies Overview

Satellite policies are used in a Junos Fusion to define how certain features are configured for standalone satellite devices within a Junos Fusion. Satellite policies can be used to configure standalone satellite devices or all satellite devices in a satellite device cluster.

Environment monitoring of the satellite devices, uplink failure detection for satellite device uplink ports, and remapping uplinks—with port pinning, uplink selection, and local port mirroring—are configured using satellite policies. See "Understanding Environment Monitoring Satellite Policies" on page 36, "Understanding Uplink Failure Detection Satellite Policies" on page 37, and "Understanding Satellite Policies for Remapping Uplink Traffic Flows on a Junos Fusion Data Center" on page 37.

Satellite policies are configured as independent policies on the aggregation device, and then associated with the Junos Fusion configuration.

Understanding Environment Monitoring Satellite Policies

You can configure an environment monitoring satellite policy in a Junos Fusion to configure how a Junos Fusion responds to link-down alarms on satellite devices.

In the environment monitoring satellite policy, you define how you want a link-down alarm from a satellite device to be handled by the Junos Fusion. The Junos Fusion can treat the link-down alarm as a yellow or red alarm, or it can be configured to ignore the alarm.

The environment monitoring policy provides the flexibility to define different alarm handling based on user preference. You can, for instance, assign environment monitoring policies to individual satellite devices based on FPC ID. You can also configure environment monitoring policies based on the product model of the satellite devices, if desired. You can, for instance, specify that all link-down alarms from EX4300 switches acting as satellite devices are treated as yellow alarms, while all link-down alarms from QFX5100 switches acting as satellite devices are treated as red alarms.

Environment monitoring satellite policies are configured using the **environment-monitoring-policy** statement in the **[edit policy-options satellite-policies]** hierarchy level.

An environment monitoring policy is applied for a single satellite device in a Junos Fusion using the **environment-monitoring-policy** statement in the [edit *chassis* **satellite-management**] or the [edit *chassis* **satellite-management fpc** *slot-id*] hierarchy levels.

You can configure a different environment monitoring policy for a single satellite device in the **fpc *slot-id*** when an environment monitoring policy for all satellite devices is configured. The environment monitoring policy for the FPC is enabled in cases when both an individual and global environment monitoring policy is configured.

Understanding Uplink Failure Detection Satellite Policies

Satellite policies are used to configure uplink failure detection on satellite device uplink ports within a Junos Fusion.

For information on uplink failure detection within a Junos Fusion, see "Overview of Uplink Failure Detection on a Junos Fusion" on page 1049.

Understanding Satellite Policies for Remapping Uplink Traffic Flows on a Junos Fusion Data Center

Satellite policies are used to configure the remapping of uplink traffic flows within a Junos Fusion Data Center. You can configure uplink port pinning and flow-based uplink selection to improve load-balancing of traffic flows across uplink ports. You can use local port mirroring to troubleshoot and monitor applications.

See "Understanding Remapping Uplink Traffic Flows on a Junos Fusion Data Center" on page 1011.

Related Documentation

- *Configuring Junos Fusion Provider Edge*
- *Configuring or Expanding a Junos Fusion Enterprise*

Understanding the Flow of Data Packets in a Junos Fusion Topology

All Ethernet data packets that are exchanged between aggregation devices and satellite devices in a Junos Fusion topology include an E-channel tag (ETAG) header that carries an E-channel identifier (ECID) value. The ECID value, which is assigned by the aggregation device, identifies the source or destination extended port on one of the connected satellite devices.

In a sample Junos Fusion topology, where an aggregation device is connected to two satellite devices, the following Layer 2 unicast data packet flow scenarios can occur:

- Scenario 1—A host on one satellite device sends a packet to another host on the same satellite device. For example, Host 2 sends a unicast packet to Host 4. Both hosts are connected to Satellite device 1. (See Figure 10 on page 38.)
- Scenario 2—A host on one satellite device sends a packet to another host on the other satellite device. For example, Host 2, which is connected to Satellite device 1, sends a unicast packet to Host 7, which is connected to Satellite device 2. (See Figure 11 on page 39.).

Figure 10: Layer 2 Unicast Data Packet Flow Through a Junos Fusion Topology—Scenario 1

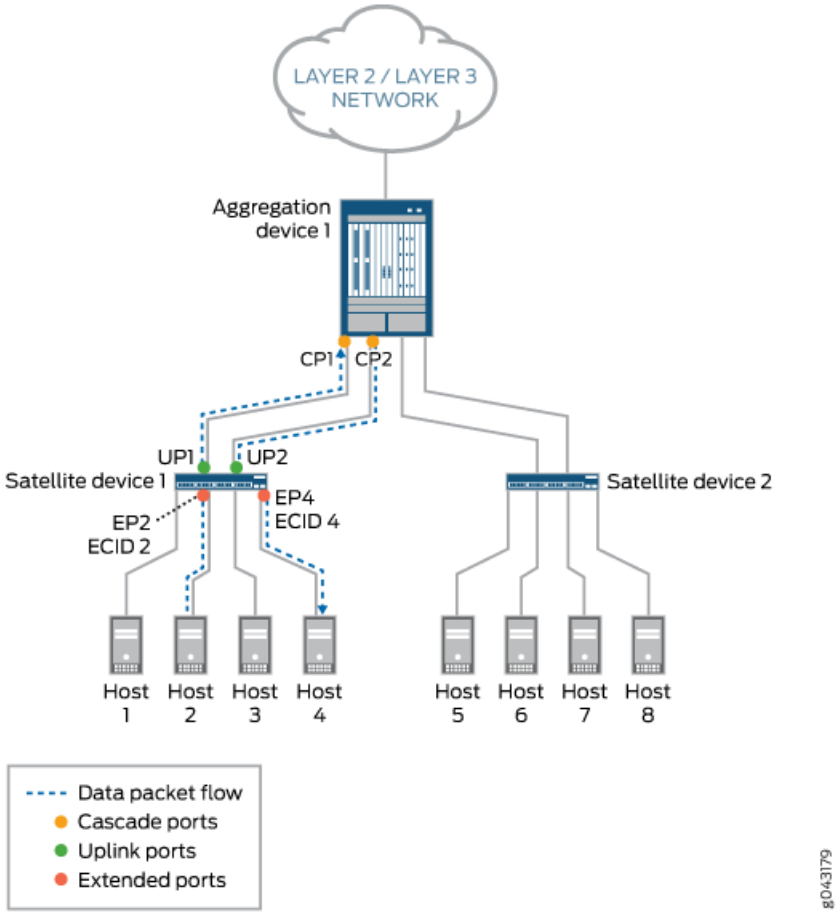

Figure 11: Layer 2 Unicast Data Packet Flow Through a Junos Fusion Topology—Scenario 2

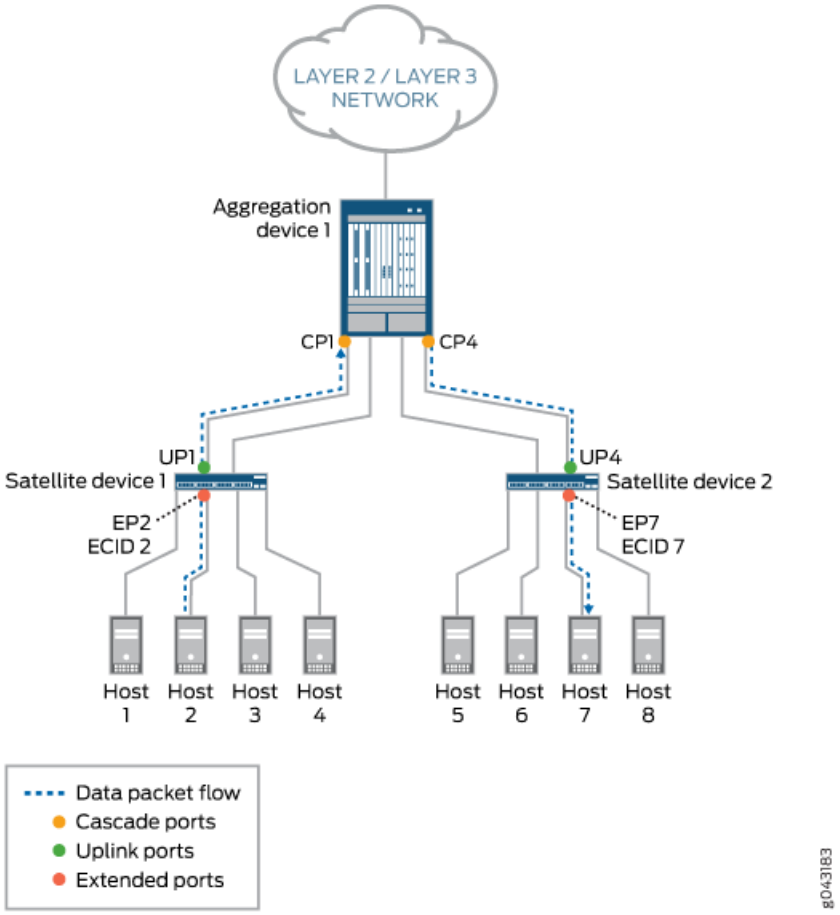

In scenario 1, where Host 2 sends a unicast data packet to Host 4, the following events occur:

NOTE: Only the events that are performed by Junos Fusion components are listed. Events handled by components that are not specific to the Junos Fusion topology are excluded.

1. Extended port EP2 on Satellite device 1 receives the packet from Host 2.

2. Satellite device 1 inserts an ETAG header in the packet. The ETAG header carries the ECID value (ECID 2), which is assigned by Aggregation device 1 to extended port EP2.

3. On Satellite device 1, two uplink ports (UP1 and UP2) are connected to Aggregation device 1. As a result, traffic between the devices can be load-balanced. In this case,

uplink port UP1 is chosen to forward the packet to cascade port CP1 on Aggregation device 1.

4. On receiving the packet, Aggregation device 1 extracts the ECID value (ECID 2) from the ETAG header of the packet and learns that the packet is from extended port EP2 on Satellite device 1. Aggregation device 1 then removes the ETAG header from the packet.

5. Aggregation device 1 performs a lookup for Host 4. The result of the lookup is extended port EP4 on Satellite device 1.

6. On Aggregation device 1, two cascade ports (CP1 and CP2) are connected to Satellite device 1. As a result, traffic between the devices can be load-balanced. In this case, cascade port CP2 is chosen to forward the packet to uplink port UP2 on Satellite device 1.

7. The packet is forwarded to cascade port CP2, where a new ETAG header and ECID value (ECID 4), which is assigned by Aggregation device 1 to extended port EP4, is added.

8. The packet is received by uplink port UP2 on Satellite device 1.

9. Satellite device 1 extracts the ECID value (ECID 4) from the ETAG header of the packet, then maps ECID 4 to extended port EP4.

10. Host 4 receives the packet from extended port EP4.

In scenario 2, where Host 2 sends a unicast data packet to Host 7, the events that occur are the same as for scenario 1 except for the following:

- Event 5—Aggregation device 1 performs a lookup for Host 7. The result of the lookup is extended port EP7 on Satellite device 2.
- Event 6—On Aggregation device 1, two cascade ports (CP3 and CP4) are connected to Satellite device 2. As a result, traffic between the devices can be load-balanced. In this case, cascade port CP4 is chosen to forward the packet to uplink port UP4 on Satellite device 2.
- Event 7—The packet is forwarded to cascade port CP4, where a new ETAG header and ECID value (ECID 7), which is assigned by Aggregation device 1 to extended port EP7, is added.
- Event 8—The packet is received by uplink port UP4 on Satellite device 2.
- Event 9—Satellite device 2 extracts the ECID value (ECID 7) from the ETAG header of the packet, and then maps ECID 7 to extended port EP7.
- Event 10—Host 7 receives the packet from extended port EP7.

Related Documentation

- *Understanding Junos Fusion Provider Edge Components*
- *Understanding Junos Fusion Enterprise Components*

CHAPTER 2

Junos Fusion Data Center Configuration

Enabling Configuration Synchronization Between Aggregation Devices in a Junos Fusion

A Junos Fusion using multiple aggregation devices often requires that the configuration of a feature—for example, an extended port, and entities such as routing instances and VLANs that include the extended port—must match on all aggregation devices. If a configuration statement for the feature—in this case, the extended port—is specified differently on one aggregation device, the statement on that aggregation device might be implemented in an unpredictable manner or might not be implemented at all.

Configuration synchronization can be used to ensure that configuration done in a configuration group is applied on all aggregation devices when committed. Configuration synchronization simplifies administration of a Junos Fusion by allowing users to enter configuration statements in a configuration group and apply the configuration group to all aggregation devices rather than repeating a configuration procedure manually on each aggregation device. Configuration synchronization also ensures configuration consistency in that the same configuration is applied to all aggregation devices.

We strongly recommend using configuration synchronization for software features that must be configured exactly the same on all aggregation devices.

In a Junos Fusion Data Center with EVPN, QFX10008 and QFX10016 switches, which support two Routing Engines, can function as aggregation devices. When applying a configuration group to aggregation devices that support two Routing Engines, you must apply the configuration group to each Routing Engine. For information about configuring an IP address for each Routing Engine, see "Understanding Configuration Synchronization in a Junos Fusion" on page 20.

The available group configuration options are beyond the scope of this document; see Understanding MC-LAG Configuration Synchronization and Synchronizing and Committing MC-LAG Configurations for additional information on using group configurations in an MC-LAG topology.

To enable configuration synchronization between aggregation devices in a Junos Fusion.

NOTE: For the sake of brevity, the examples in this procedure show the configuration on only two aggregation devices. Unless specifically called out, the examples for two aggregation devices also apply to topologies with four aggregation devices.

1. Ensure the aggregation devices are reachable from one another:

   Aggregation device 1:

   ```
   user@ad1> ping ad2 rapid
   PING ad2.host.example.net (192.168.255.41): 56 data bytes
   !!!!!
   mostly o--- ad2.example.net ping statistics ---
   5 packets transmitted, 5 packets received, 0% packet loss
   round-trip min/avg/max/stddev = 0.317/0.331/0.378/0.024 ms
   ```

   Aggregation device 2:

   ```
   user@ad2> ping ad1 rapid
   PING ad1.host.example.net (192.168.255.40): 56 data bytes
   !!!!!
   --- ad1.example.net ping statistics ---
   5 packets transmitted, 5 packets received, 0% packet loss
   round-trip min/avg/max/stddev = 0.317/0.331/0.378/0.024 ms
   ```

   If the devices cannot ping one another, try statically mapping the hostnames of each device's management IP address and retry the ping.

   Aggregation device 1:

   ```
   user@ad1# set system static-host-mapping inet 192.168.255.41
   user@ad1# commit
   user@ad1# run ping ad2 rapid
   ```

   Aggregation device 2:

   ```
   user@ad2# set system static-host-mapping ad1 inet 192.168.255.40
   user@ad2# commit
   user@ad2# run ping ad1 rapid
   ```

   If the devices cannot ping one another after the hostnames are statically mapped, see Connecting and Configuring an EX9200 Switch (CLI Procedure) or the Installation and Upgrade Guide for EX9200 Switches.

2. Enable configuration synchronization:

   Aggregation device 1:

   ```
   user@ad1# set system commit peers-synchronize
   ```

   Aggregation device 2:

```
user@ad2# set system commit peers-synchronize
```

3. Configure each aggregation device so that the other aggregation devices are identified as configuration peers. Enter the authentication credentials of each peer aggregation device to ensure group configurations on one aggregation device are committed to the other aggregation devices.

   WARNING: The password *password* is used in this configuration step for illustrative purposes only. Use a more secure password in your device configuration.

   NOTE: This step assumes a user with an authentication password has already been created on each Juniper Networks switch acting as an aggregation device. For instructions on configuring username and password combinations, see Connecting and Configuring an EX9200 Switch (CLI Procedure).

   Aggregation device 1:

   ```
   user@ad1# set system commit peers ad2 user root authentication password
   ```

   Aggregation device 2:

   ```
   user@ad2# set system commit peers ad1 user root authentication password
   ```

4. Enable the Network Configuration (NETCONF) protocol over SSH:

   Aggregation device 1:

   ```
   user@ad1# set system services netconf ssh
   ```

   Aggregation device 2:

   ```
   user@ad2# set system services netconf ssh
   ```

5. Commit the configuration:

   Aggregation device 1:

   ```
   user@ad1# commit
   ```

   Aggregation device 2:

   ```
   user@ad2# commit
   ```

6. (Optional) Create a configuration group for testing to ensure configuration synchronization is working.

   Example for Junos Fusion Enterprise and Junos Fusion Data Center with aggregation devices that have one Routing Engine:

Aggregation Device 1:

```
user@ad1# set groups TEST when peers [ad1 ad2]
user@ad1# set apply-groups TEST
```

Aggregation Device 2:

```
user@ad2# set apply-groups TEST
```

Example for Junos Fusion Data Center with EVPN architecture and QFX10008 or QFX10016 switches with two Routing Engines as aggregation devices:

Aggregation Device 1:

```
user@ad1# set groups TEST when peers 172.16.75.10 (ad1, re0)
user@ad1# set groups TEST when peers 172.16.75.20 (ad1, re1)
user@ad1# set groups TEST when peers 172.16.75.30 (ad2, re0)
user@ad1# set groups TEST when peers 172.16.75.40 (ad2, re1)
user@ad1# set groups TEST when peers 172.16.75.50 (ad3, re0)
user@ad1# set groups TEST when peers 172.16.75.60 (ad3, re1)
user@ad1# set groups TEST when peers 172.16.75.70 (ad4, re0)
user@ad1# set groups TEST when peers 172.16.75.80 (ad4, re1)
user@ad1# set apply-groups TEST
```

Aggregation Device 2:

```
user@ad2# set apply-groups TEST
```

Aggregation Device 3:

```
user@ad2# set apply-groups TEST
```

Aggregation Device 4:

```
user@ad2# set apply-groups TEST
```

7. (Optional) Configure and commit a group on aggregation device 1, and confirm it is implemented on aggregation device 2:

> NOTE: This step shows how to change one interface configuration using groups. Interface ranges cannot be specified within groups and synchronized between configuration peers in a Junos Fusion to configure multiple interfaces simultaneously.

Aggregation device 1:

```
user@ad1# set groups TEST interfaces ge-0/0/1 description testing123
user@ad1# commit
```

Aggregation device 2:

```
user@ad2# show groups TEST
when {
    peers [ ad1 ad2 ];
```

```
}
interfaces {
    ge-0/0/1 {
        description testing123;
    }
}
user@ad2# run show interfaces ge-0/0/1
Physical interface: ge-0/0/1, Enabled, Physical link is Down
  Interface index: 235, SNMP ifIndex: 743
  Description: testing123
  (additional output removed for brevity)
```

Perform the same procedure to verify configuration synchronization from aggregation device 2 to aggregation device 1, if desired.

Delete the test configuration group on each aggregation device.

Aggregation device 1:

```
user@ad1# delete groups test
```

Aggregation device 2:

```
user@ad2# delete groups test
```

For more information, see *Enabling Junos Fusion Enterprise on an Enterprise Campus Network* for a sample Junos Fusion Enterprise topology configured largely using configuration synchronization or *Enterprise Data Center: Junos Fusion Data Center Architecture* for a sample Junos Fusion Data Center topology largely configured using configuration synchronization.

Related Documentation

- *Enabling Junos Fusion Enterprise on an Enterprise Campus Network*
- *Enterprise Data Center: Junos Fusion Data Center Architecture*
- Network Configuration Example: Configuring MC-LAG on EX9200 Switches in the Core for Campus Networks
- Synchronizing and Committing MC-LAG Configurations
- Understanding MC-LAG Configuration Synchronization
- Understanding Configuration Synchronization in a Junos Fusion on page 20
- *Configuring or Expanding a Junos Fusion Enterprise*

Configuring or Expanding a Junos Fusion Data Center

This topic provides the instructions needed to configure a Junos Fusion Data Center—a Junos Fusion using QFX10000 switches as aggregation devices—and to add satellite devices or aggregation devices to an existing Junos Fusion Data Center. The following

table outlines the Junos Fusion Data Center configuration tasks and for which topologies the task must be performed.

Task	Junos Fusion Data Center with Multiple Aggregation Devices and EVPN?	Junos Fusion Data Center with Two Aggregation Devices and MC-LAG?	Junos Fusion Data Center with One Aggregation Device?
"Preparing the Aggregation Devices" on page 48	Yes	Yes	Yes
"Preparing a Switch Running Junos OS to Become a Satellite Device" on page 49	Yes	Yes	Yes
"Configuring the FPC Slot IDs and Cascade Ports on Aggregation Devices" on page 50	Yes	Yes	Yes
"Managing Software Upgrade Groups on the Aggregation Device" on page 52	Yes	Yes	Yes
"Enabling Configuration Synchronization Between Aggregation Devices in a Junos Fusion" on page 43	Yes	Yes	No
"Configuring the Dual Aggregation Device Topology (Dual Aggregation Device Topologies With MC-LAG Only)" on page 56	No	Yes	No
"Configuring a Junos Fusion Data Center With EVPN" on page 59	Yes	No	No
"Installing Satellite Software and Adding Satellite Devices to the Junos Fusion" on page 71	Yes	Yes	Yes

Preparing the Aggregation Devices

Ensure that each Routing Engine in each aggregation device is running a version of Junos OS software that is compatible with Junos Fusion Data Center. (The QFX10002 switch supports one Routing Engine, and the QFX10008 and QFX100016 switches support two Routing Engines.) See Junos Fusion Hardware and Software Compatibility Matrices and Understanding Junos Fusion Data Center Software and Hardware Requirements.

If each Routing Engine in each aggregation device does not have the correct version of Junos OS installed, upgrade the Junos OS. See Understanding Junos Fusion Data Center Software and Hardware Requirements for pointers to supported Junos OS images.

NOTE: This procedure shows one method of upgrading Junos OS software. The instructions assume that you understand the basics of Junos OS image file management and have already acquired the target Junos OS image. This upgrade procedure causes avoidable system downtime.

The number of Junos OS software upgrade options available for QFX10000 switches is beyond the scope of this document. For information about Junos OS software installation options for QFX10000 switches, see the *Software Installation and Upgrade Guide*.

```
user@aggregation-device> request system software add aggregation-device-package-name
```

```
user@aggregation-device> request system software add aggregation-device-package-name
re1
```

After performing the upgrade, reboot the Routing Engine to complete the software upgrade.

```
user@aggregation-device> request system reboot
```

Preparing a Switch Running Junos OS to Become a Satellite Device

Use this procedure to prepare all switches running Junos OS software to become satellite devices.

This section can be skipped if your satellite device is already running satellite software.

To prepare a switch running Junos OS software to become a satellite device:

1. Log into the device that will become a satellite device through the console port.

2. Ensure the device is running a version of Junos OS that allows it to be converted into a satellite device. See Understanding Junos Fusion Data Center Software and Hardware Requirements for information on Junos OS requirements.

   If you need to upgrade Junos OS on your satellite device before proceeding, see the *Software Installation and Upgrade Guide*.

3. Zeroize the device:

   ```
   user@satellite-device> request system zeroize
   ```

   NOTE: The device reboots to complete the procedure for zeroizing the device.

   If you are not logged into the device using the console port connection, your connection to the device is lost after entering the **request system zeroize** command.

If you lose your connection to the device, log in using the console port.

4. (EX4300 switch uplink ports only) After the reboot is complete, convert the built-in 40-Gbps interfaces with QSFP+ transceivers from Virtual Chassis ports (VCPs) into network ports:

   ```
   user@satellite-device> request virtual-chassis vc-port delete pic-slot 1 port port-number
   ```

   For example, to convert all four built-in 40-Gbps interfaces with QSFP+ transceivers on an EX4300-24P switch into network ports:

   ```
   user@satellite-device>request virtual-chassis vc-port delete pic-slot 1 port 0
   user@satellite-device> request virtual-chassis vc-port delete pic-slot 1 port 1
   user@satellite-device> request virtual-chassis vc-port delete pic-slot 1 port 2
   user@satellite-device> request virtual-chassis vc-port delete pic-slot 1 port 3
   ```

   The number of built-in 40-Gbps interfaces with QSFP+ transceivers varies by EX4300 switch model. See *EX4300 Switches Hardware Overview*.

   This step is required for the 40-Gbps interfaces with QSFP+ transceivers that will be used as uplink interfaces to directly connect to the aggregation device in a Junos Fusion Data Center, because zeroizing the devices restores the default settings and 40-Gbps interfaces with QSFP+ transceivers on EX4300 switches are configured into VCPs by default. VCPs cannot be configured into uplink ports to connect to aggregation devices in a Junos Fusion.

Configuring the FPC Slot IDs and Cascade Ports on Aggregation Devices

For more information on FPC slot IDs and cascade ports, see "Understanding Junos Fusion Data Center Components" on page 6.

To configure FPC slot IDs and cascade ports:

1. Configure the cascade ports, and commit the configuration.

   A cascade port is a port on an aggregation device that connects to a satellite device. Data and control traffic is passed between the aggregation device and the satellite devices over the cascade port link.

   To configure a cascade port:

   ```
   [edit]
   user@aggregation-device# set interfaces interface-name cascade-port
   ```

   where *interface-name* in the cascade port interface on the aggregation device.

   For example, to configure interface xe-0/0/1 on the aggregation device into a cascade port:

   ```
   [edit]
   user@aggregation-device# set interfaces xe-0/0/1 cascade-port
   ```

   Commit the configuration:


```
[edit]
user@aggregation-device# commit
```

If your aggregation device is a QFX10008 or QFX10016 switch with two Routing Engines, commit the configuration on both Routing Engines:

```
[edit]
user@aggregation-device# commit synchronize
```

2. Configure the FPC slot ID number of each satellite device.

   In a Junos Fusion Data Center, each satellite device must be mapped to an FPC identifier (FPC ID). The FPC ID is in the range of 65 through 255, and it is used for Junos Fusion Data Center configuration, monitoring, and maintenance. Interface names—which are identified using the *type-fpc / pic / port* format—use the FPC ID as the *fpc* variable when the satellite device is participating in a Junos Fusion Data Center.

   - To map the FPC slot ID to a satellite device's MAC address:

     ```
     [edit]
     user@aggregation-device# set chassis satellite-management fpc slot-id system-id
     mac-address
     ```

     where *slot-id* becomes the FPC slot ID of the satellite device and *mac-address* is the satellite device's MAC address. The FPC slot ID functions as the FPC slot identifier.

     For example, to map FPC slot ID 110 to the satellite device using MAC address 00:00:5E:00:53:00:

     ```
     [edit]
     user@aggregation-device# set chassis satellite-management fpc 110 system-id
     00:00:5E:00:53:00
     ```

   - To map the FPC slot ID to a satellite device's serial number:

     ```
     [edit]
     user@aggregation-device# set chassis satellite-management fpc slot-id serial-number
     serial-number
     ```

     where *slot-id* becomes the FPC slot ID of the satellite device and *serial-number* is the satellite device's serial number. The FPC slot ID must be 65 or larger, and it functions as the FPC slot identifier.

     For instance, to map FPC slot ID 101 to the satellite device using the serial number ABCDEFGHIJKL:

     ```
     [edit]
     user@aggregation-device# set chassis satellite-management fpc 101 serial-number
     ABCDEFGHIJKL
     ```

   - To map the FPC slot ID for a satellite device to a cascade port, enter:

     ```
     [edit]
     user@aggregation-device# set chassis satellite-management fpc slot-id cascade-ports
     interface-name
     ```

where *slot-id* becomes the FPC slot ID of the satellite device, and *interface-name* is the name of an interface that you configured as a cascade port.

For example, to configure the FPC slot ID of the satellite device that is connected to xe-0/0/1 to 101:

```
[edit]
user@aggregation-device# set chassis satellite-management fpc 101 cascade-ports
xe-0/0/1
```

If a prospective satellite device is connected to a Junos Fusion Data Center without having a configured FPC slot ID, the prospective satellite device does not participate in the Junos Fusion Data Center until an FPC ID is associated with it. The **show chassis satellite unprovision** output includes a list of satellite devices that are not participating in a Junos Fusion Data Center because of an FPC ID association issue.

The FPC slot ID configuration must match on each aggregation device in a topology with multiple aggregation devices and in which satellite devices are connected to multiple aggregation devices.

Managing Software Upgrade Groups on the Aggregation Device

A satellite software upgrade group is a group of satellite devices that is designated to run the same satellite software version using the same satellite software package. One Junos Fusion Data Center can contain multiple software upgrade groups, and multiple software upgrade groups should be configured in most Junos Fusion Data Centers to avoid network downtimes during satellite software installations.

When a satellite device is added to a Junos Fusion Data Center, the aggregation device checks if the satellite device is using an FPC ID that is included in a satellite software upgrade group. If the device is a satellite device that is using an FPC ID that is part of a satellite software upgrade group, the device—unless it is already running the same version of satellite software—upgrades its satellite software using the satellite software associated with the satellite software upgrade group.

When the satellite software package associated with an existing satellite software group is changed, the satellite software for all member satellite devices is upgraded using a throttled upgrade. The throttled upgrade ensures that only a few satellite devices are updated at a time to minimize the effects of a traffic disruption resulting from too many satellite devices upgrading software simultaneously.

The two most common methods for installing satellite software onto a satellite device—autoconverting a device into a satellite device when it is cabled into an aggregation device and manually converting a device that is cabled into an aggregation device into a satellite device—require that a satellite software upgrade group is configured.

Software upgrade groups are managed from the aggregation device.

In a Junos Fusion Data Center with multiple aggregation devices, the configuration for software upgrade groups must be the same on each aggregation device. To ensure that the configuration is the same on all aggregation devices, we recommend using the configuration synchronization feature. The procedure in this topic explains how to enter

software upgrade-related commands in a configuration group and apply the group to all aggregation devices. This procedure assumes that you have already enabled the configuration synchronization feature in your Junos Fusion Data Center. For more information about performing this task, see "Enabling Configuration Synchronization Between Aggregation Devices in a Junos Fusion" on page 43.

NOTE: When applying a configuration synchronization group to a QFX10008 or QFX10016 switch, which supports two Routing Engines, you must apply the group to both Routing Engines. The following procedure provides a sample configuration for this use case.

To manage a software upgrade group:

1. Log into an aggregation device.

2. Download the satellite software onto each aggregation device (recommended) or onto a remote server.

   The satellite software can be downloaded from the main Junos Fusion software download page:

   Junos Fusion - Download Software

3. (Multiple aggregation device topologies only.) Create a configuration group that includes the software upgrade group-related commands that you want synchronized to all aggregation devices. Apply the configuration group to all aggregation devices in the Junos Fusion Data Center.

   Example for a Junos Fusion Data Center with four QFX10002 switches as Aggregation Devices 1, 2, 3, and 4:

```
[edit]
user@aggregation-device-1# set groups configuration-group-name when peers
aggregation-device-management-ip-address
...
user@aggregation-device-1# set apply-groups configuration-group-name

[edit]
user@aggregation-device-1# set groups upgrade when peers 172.16.75.10 (AD1)
user@aggregation-device-1# set groups upgrade when peers 172.16.75.20 (AD2)
user@aggregation-device-1# set groups upgrade when peers 172.16.75.30 (AD3)
user@aggregation-device-1# set groups upgrade when peers 172.16.75.40 (AD4)
user@aggregation-device-1# set apply-groups upgrade
```

   Example for a Junos Fusion Data Center with four QFX10008 switches as Aggregation Devices 1, 2, 3, and 4:

   Before issuing the following commands, make sure that you have configured an IP address for each Routing Engine in the QFX10008 switch. For information about this subject, see "Understanding Configuration Synchronization in a Junos Fusion" on page 20.

```
[edit]
user@aggregation-device-1# set groups configuration-group-name when peers
em0.0-ip-address
...
user@aggregation-device-1# set apply-groups configuration-group-name

[edit]
user@aggregation-device-1# set groups upgrade when peers 172.16.75.10 (AD1, re0)
user@aggregation-device-1# set groups upgrade when peers 172.16.75.20 (AD1, re1)
user@aggregation-device-1# set groups upgrade when peers 172.16.75.30 (AD2, re0)
user@aggregation-device-1# set groups upgrade when peers 172.16.75.40 (AD2, re1)
user@aggregation-device-1# set groups upgrade when peers 172.16.75.50 (AD3, re0)
user@aggregation-device-1# set groups upgrade when peers 172.16.75.60 (AD3, re1)
user@aggregation-device-1# set groups upgrade when peers 172.16.75.70 (AD4, re0)
user@aggregation-device-1# set groups upgrade when peers 172.16.75.80 (AD4, re1)
```

4. Create a software upgrade group, and associate satellite devices with the group:

```
[edit]
user@aggregation-device# set groups configuration-synchronization-group-name chassis
satellite-management upgrade-groups upgrade-group-name satellite slot-id-number-or-range
```

NOTE: If you performed the configuration in step 3, include the groups *configuration-synchronization-group-name* configuration statement. Otherwise, you do not need to include this configuration statement.

The *upgrade-group-name* is the name of the upgrade group, and the *slot-id-number-or-range* is the FPC slot ID number or range of numbers of the satellite devices that are being added to the upgrade group.

NOTE: If you enter the name of an existing satellite software upgrade group as the *upgrade-group-name*, the specified satellite devices are added to the existing software upgrade group.

For example, to create a software upgrade group named **group1** that includes all satellite devices numbered 101 through 120 and include this command in the configuration synchronization group created in step 3:

```
[edit]
user@aggregation-device# set groups upgrade chassis satellite-management
upgrade-groups group1 satellite 101-120
```

5. Commit the configuration:

If you are configuring an aggregation device with two Routing Engines:

```
[edit]
user@aggregation-device# commit synchronize
```

If you are configuring an aggregation device with a single Routing Engine or want to commit the configuration to a single Routing Engine only:

```
[edit]
user@aggregation-device# commit
```

The configuration must be committed before associating a satellite software image with the satellite software upgrade group, which is done in Step 7.

6. On each Routing Engine on each aggregation device, expand the size of the /user disk partition to provide sufficient space for installing satellite packages. The system will reboot to complete the operation:

```
user@aggregation-device> request system storage user-disk
```

NOTE: A QFX10002 switch supports one Routing Engine, and QFX10008 and QFX10016 switches support two Routing Engines.

7. Associate the satellite software upgrade group with a satellite software image.

NOTE: In a Junos Fusion Data Center with multiple aggregation devices, you can perform this step on only one aggregation device provided that a satellite software version has not yet been associated with the group on the other aggregation devices.

If any of the other aggregation devices already has a satellite software version associated with the group, be aware that the version must be the same on all aggregation devices. The satellite software upgrade does not proceed unless all aggregation devices have the same or no satellite software version specified for the group.

```
user@aggregation-device> request system software add package-name upgrade-group
upgrade-group-name
```

where *package-name* is the URL or pathname to the satellite software package, and *upgrade-group-name* is the name that you assigned the software upgrade group in step 4.

For example, to associate a satellite software image named **satellite-3.4R2.0-signed.tgz** that is currently stored in the **/var/tmp** directory on the aggregation device to the software upgrade group named **group1**:

```
user@aggregation-device> request system software add
/var/tmp/satellite-3.4R2.0-signed.tgz upgrade-group group1
```

Associating a new satellite software image with a software upgrade group can trigger a software upgrade on satellite devices in the group that are not yet running the specified software version. A throttled satellite software upgrade might begin after entering the **request system software add** command. A satellite software upgrade

might also be triggered when a configuration that uses the software upgrade group is committed.

Configuring the Dual Aggregation Device Topology (Dual Aggregation Device Topologies With MC-LAG Only)

Use this procedure to connect and configure a second aggregation device into a Junos Fusion Data Center topology.

Before you begin:

- Ensure that a Junos Fusion topology has already been configured, and that the topology includes a satellite software upgrade group.
- Ensure that the aggregation devices are already cabled together and that all cabling to all satellite devices has been completed for both aggregation devices. For information on cabling requirements, see Understanding Junos Fusion Data Center Software and Hardware Requirements.

To configure a dual aggregation device topology:

1. (Required only if aggregation device was previously configured into single home mode) Delete single home configuration mode:

   On aggregation device 1 and 2:

   ```
   [edit]
   user@aggregation-device# delete chassis satellite-management single-home
   ```

2. Create and configure a redundancy group on the first aggregation device.

   A dual aggregation device topology in a Junos Fusion is a multichassis link aggregation group (MC-LAG) that uses the Inter-Chassis Communications Protocol (ICCP) to communicate between the aggregation devices. ICCP is typically used in an MC-LAG to exchange information between MC-LAG peers. The MC-LAG peers in a Junos Fusion dual aggregation topology are the aggregation devices.

   A redundancy group is required to enable ICCP in a Junos Fusion. A Junos Fusion topology supports one redundancy group that includes two member devices—the

aggregation devices—while also including a configuration parameter that allows users to specify that the satellite devices also belong to the redundancy group.

To create and configure the redundancy group on the first aggregation device:

a. Specify the redundancy group ID number on both aggregation devices. The redundancy group name is created and named as part of this process.

   The redundancy group ID number and name must match on both aggregation devices.

   On aggregation device 1 and 2:

   ```
   [edit chassis satellite-management redundancy-groups]
   user@aggregation-device# set redundancy-group-name redundancy-group-id
   redundancy-group-id-number
   ```

   For instance, to create a redundancy group named junos-fusion-data-center-network that uses redundancy group ID 1 on aggregation device 1:

   ```
   [edit chassis satellite-management redundancy-groups]
   user@aggregation-device# set junos-fusion-data-center-network redundancy-group-id
   1
   ```

   Repeat this procedure on aggregation device 2:

   ```
   [edit chassis satellite-management redundancy-groups]
   user@aggregation-device# set junos-fusion-data-center-network redundancy-group-id
   1
   ```

b. Define the chassis ID number of the each aggregation device:

   ```
   [edit chassis satellite-management redundancy-groups]
   user@aggregation-device# set chassis-id chassis-id-number
   ```

   For instance, to assign the aggregation device 1 the chassis ID of 1 for the junos-fusion-data-center-network redundancy group:

   ```
   [edit chassis satellite-management redundancy-groups]
   user@aggregation-device# set chassis-id 1
   ```

   To assign aggregation device 2 the chassis ID of 2 for the junos-fusion-data-center-network redundancy group:

   ```
   [edit chassis satellite-management redundancy-groups]
   user@aggregation-device# set chassis-id 2
   ```

   The chassis ID numbers cannot match and are used to create the ICL that interconnects the aggregation device in the Junos Fusion topology.

c. Define the peer chassis ID number—the chassis ID number of the other aggregation device—and interface to use for the ICL:

   ```
   [edit chassis satellite-management redundancy-groups]
   ```

```
user@aggregation-device# set redundancy-group-name peer-chassis-id
peer-chassis-id-number inter-chassis-link interface-name
```

For instance, to use the xe-0/0/1 interface on aggregation device 1 to create an ICL that connects to aggregation device 2:

```
[edit chassis satellite-management redundancy-groups]
user@aggregation-device# set junos-fusion-data-center-network peer-chassis-id 2
inter-chassis-link xe-0/0/1
```

To complete the configuration by defining the peer chassis ID and interface on aggregation device 2:

```
[edit chassis satellite-management redundancy-groups]
user@aggregation-device# set junos-fusion-data-center-network peer-chassis-id 1
inter-chassis-link xe-0/0/1
```

The ICL is used to pass traffic between the aggregation devices.

d. Define the satellite devices that are part of the redundancy group.

The satellite device devices added to the redundancy group in this step must match on both redundancy groups.

All satellite devices in the Junos Fusion should be added to the redundancy group in this step.

To add satellite devices to the redundancy group:

```
[edit chassis satellite-management redundancy-groups]
user@aggregation-device# set redundancy-group-name satellite satellite-device-fpc-IDs
```

For instance, to include satellite devices using FPC IDs 100-140 in the redundancy group:

```
[edit chassis satellite-management redundancy-groups]
user@aggregation-device# set junos-fusion-data-center-network satellite 100-140
```

3. (Recommended) Ensure at least one link besides the ICL is connecting the aggregation devices. This link automatically becomes the ICCP link.

An ICCP link can be one link or an aggregated ethernet interface. In most Junos Fusion deployments, we recommend using a 40-Gbps link or an aggregated ethernet interface as the ICCP link.

An ICCP link is recommended but is optional because ICCP traffic is transmitted across the ICL when a dedicated ICCP link is not configured.

ICCP configuration is not required. ICCP is automatically provisioned in a Junos Fusion using dual aggregation devices, by default. User configuration of ICCP is not required and is only recommended for expert users.

If you configure an ICCP parameter in a Junos Fusion, the user-configured parameter overrides the automatically provisioned parameter for the configured parameter only.

You can disable automatic ICCP provisioning using the **no-auto-iccp-provisioning** statement.

If you decide to configure ICCP, you must configure matching configurations on both aggregation devices.

4. Configure ICCP.

   ICCP can be configured in one of the following ways:

   - Automatic ICCP provisioning

     Automatic ICCP provisioning automatically configures ICCP in a dual aggregation device setup without any user action. Automatic ICCP provisioning is enabled by default and is often the preferred method of enabling ICCP for a Junos Fusion in greenfield deployments that are not being integrated into an existing network.

     No user action is required to configure ICCP if automatic ICCP provisioning is used.

   - Manual ICCP configuration.

     Manual ICCP configuration is typically used to integrate a Junos Fusion into an existing network or by expert users that want to finely tune ICCP settings.

     Many Junos Fusion Enterprise installations occur in brownfield deployments and the Junos Fusion has to be integrated into an existing network. Brownfield deployments often have a need to maintain existing ICCP settings, in particular in scenarios where a Junos Fusion is replacing an MC-LAG topology or is supporting a network that includes other MC-LAG topologies. ICCP must be configured manually in these scenarios.

     See *Configuring Multichassis Link Aggregation on EX Series Switches* for the steps and options available to configure ICCP.

     If you configure an ICCP parameter in a Junos Fusion, the user-configured parameter overrides the automatically provisioned parameter for the configured parameter only. You can disable all automatic ICCP provisioning using the **no-auto-iccp-provisioning** statement.

     If you decide to manually configure ICCP, you must configure matching configurations on both aggregation devices.

Configuring a Junos Fusion Data Center With EVPN

This section provides a basic configuration for Junos Fusion Data Center with Ethernet VPN (EVPN). For a more comprehensive non-Junos Fusion Data Center EVPN configuration, see *Example: Configuring IRB Interfaces in an EVPN-VXLAN Environment to Provide Layer 3 Connectivity for Hosts in a Data Center*.

Figure 12 on page 60 shows a Junos Fusion Data Center in which four aggregation devices comprise an EVPN core fabric. For ease of configuration, monitoring, and troubleshooting, we recommend deploying the same QFX10000 model for all aggregation devices in the EVPN core fabric. In the Junos Fusion Data Center in Figure 12 on page 60, four QFX10002 switches act as aggregation devices, which are directly connected to each other.

In Figure 12 on page 60, EX4300, QFX5100, QFX5110, and QFX5200 switches act as satellite devices, each of which is multihomed to each aggregation device.

Figure 12: Junos Fusion Data Center with EVPN Architecture

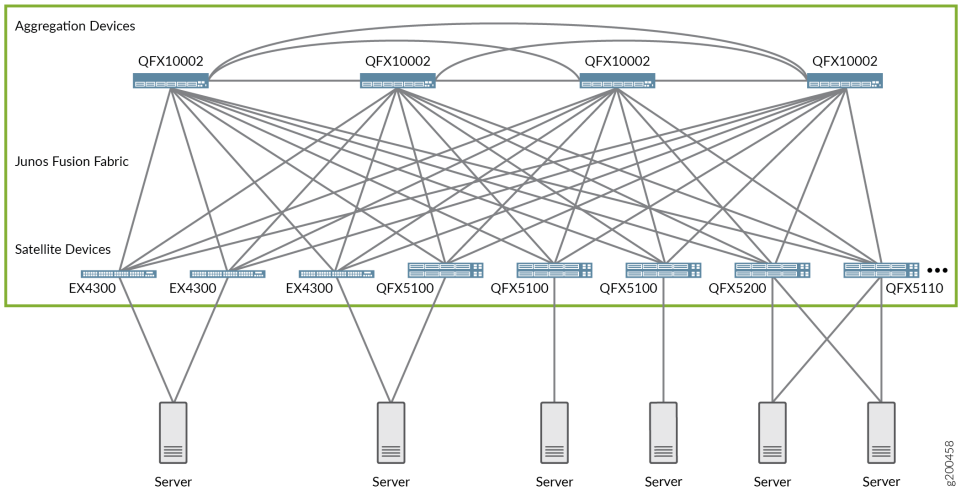

In this topology, you configure EVPN and Virtual Extensible LAN (VXLAN) on the aggregation devices only. The aggregation devices are part of an EVPN control plane that distributes server MAC address reachability and other states among themselves. Note that the EVPN processing among the aggregation devices co-exists with the IEEE 802.1BR processing that takes place between the aggregation and satellite devices. VXLAN enables an aggregation device to tunnel Layer 2 data traffic from servers in the topology to another aggregation device.

In a Junos Fusion Data Center with multiple aggregation devices, some of the basic configuration—for example, physical and integrated routing and bridging (IRB) interface configurations—is specific to a particular aggregation device. Other parts of the basic configuration—for example, extended port, VLAN, and routing instance configurations—should be exactly the same on all aggregation devices. To ensure that a configuration is the same on all aggregation devices, we recommend using the configuration synchronization feature. Where appropriate, the procedure in this section explains how to enter commands in a configuration group and apply the group to all aggregation devices. This procedure assumes that you have already enabled the configuration synchronization feature in your Junos Fusion Data Center. For more information about performing this task, see "Enabling Configuration Synchronization Between Aggregation Devices in a Junos Fusion" on page 43.

NOTE: **When applying a configuration synchronization group to a QFX10008 or QFX10016 switch, which supports two Routing Engines, you must apply the group to both Routing Engines. Where appropriate, the following procedure provides a sample configuration for this use case.**

For more about Junos Fusion Data Center with EVPN implementation details, see "Understanding EVPN in a Junos Fusion Data Center" on page 26.

Before you begin:

- Ensure that the aggregation devices are already cabled together and that cabling to all satellite devices has been completed for all aggregation devices. For information on cabling requirements, see Understanding Junos Fusion Data Center Software and Hardware Requirements.
- Ensure that a Junos Fusion Data Center topology has already been configured using following information:.
  - Preparing the Aggregation Devices on page 48
  - Preparing a Switch Running Junos OS to Become a Satellite Device on page 49
  - Configuring the FPC Slot IDs and Cascade Ports on Aggregation Devices on page 50
  - Managing Software Upgrade Groups on the Aggregation Device on page 52
  - Enabling Configuration Synchronization Between Aggregation Devices in a Junos Fusion on page 43

NOTE: The following procedure provides the configuration for one aggregation device only (aggregation device 1). The configuration for this aggregation device essentially serves as a template for the configuration of the other aggregation devices. For the configuration of the other aggregation devices, where appropriate, you can replace aggregation device 1-specific information with the information specific to the device you are configuring, add additional commands, and so on.

To configure Junos Fusion Data Center with EVPN:

1. Delete the single-home configuration.

   This step is required only if an aggregation device was previously set to single home mode.

   ```
   [edit]
   user@aggregation-device# delete chassis satellite-management single-home
   ```

2. Configure the interfaces.

   a. If you have not already, configure the cascade ports on the aggregation device as described in "Configuring the FPC Slot IDs and Cascade Ports on Aggregation Devices" on page 50.

   b. Configure interfaces for connection to each of the other aggregation devices.

      ```
      [edit interfaces]
      user@aggregation-device-1# set interface-name mtu bytes user@aggregation-device-1#
      set interface-name unit 0 family inet address ip-address/ip-prefix
      ```

      For example:

```
[edit interfaces]
user@aggregation-device-1# set et-0/0/2 mtu 9200
user@aggregation-device-1# set et-0/0/2 unit 0 description "To aggregation-device-2"
user@aggregation-device-1# set et-0/0/2 unit 0 family inet address 10.0.13.1/24
user@aggregation-device-1# set et-0/0/1 mtu 9200
user@aggregation-device-1# set et-0/0/1 unit 0 description "To aggregation-device-3"
user@aggregation-device-1# set et-0/0/1 unit 0 family inet address 10.0.14.1/24
user@aggregation-device-1# set et-0/0/34 mtu 9200
user@aggregation-device-1# set et-0/0/34 unit 0 description "To aggregation-device-4"
uuser@aggregation-device-1# set et-0/0/34 unit 0 family inet address 10.0.12.1/24
```

NOTE: On these aggregation device-to-aggregation device interfaces, the MTU is set to 9200 bytes to accommodate the transmission of VXLAN-encapsulated packets.

c. Configure a loopback address for aggregation device 1:

The loopback address is used to identify a particular aggregation device for features such as redundancy groups.

```
[edit interfaces]
user@aggregation-device-1# set lo0 unit 0 family inet address ip-address/ip-prefix
primary
```

For example:

```
[edit interfaces]
user@aggregation-device-1# set lo0 unit 0 family inet address 127.1.1.1/32 primary
```

d. Configure the management interface em0.0 with an IP address.

```
[edit interfaces]
user@aggregation-device-1# set em0 unit 0 family inet address
ip-address/ip-prefix
```

For example, to configure IP address 172.16.75.10/24 for em0.0 on a QFX10002 switch, which supports one Routing Engine:

```
[edit interfaces]
user@aggregation-device-1# set em0 unit 0 family inet address 172.16.75.10/24
```

On a QFX10008 or QFX10016 switch, which has two Routing Engines, you can identify each Routing Engine by configuring an IP address for the Routing Engine in slot 0 (re0) and another IP address for the Routing Engine in slot 1 (re1). We recommend using management interface em0.0 for both re0 and re1, which you can configure using configuration groups for re0 and re1. For example:

```
[edit]
user@aggregation-device-1# set groups re0 interfaces em0 unit 0 family inet address
172.16.75.10/24
user@aggregation-device-1# set groups re1 interfaces em0 unit 0 family inet address
172.16.75.20/24
```

3. Configure the routing options for aggregation device 1.

   a. Configure a router ID, which is the same IP address specified for the loopback interface.

      ```
      [edit routing-options]
      user@aggregation-device-1# set router-id loopback-ip-address
      ```

      For example:

      ```
      [edit routing-options]
      user@aggregation-device-1# set router-id 127.1.1.1
      ```

   b. Configure an autonomous system to be used by BGP.

      ```
      [edit routing-options]
      user@aggregation-device-1# set autonomous-system number
      ```

      For example:

      ```
      [edit routing-options]
      user@aggregation-device-1# set autonomous-system 64500
      ```

4. Create a redundancy group, which is an entity that includes all aggregation and satellite devices and enables EVPN on all aggregation devices in the Junos Fusion Data Center.

   a. Define a unique chassis ID number that identifies aggregation device 1:

      ```
      [edit chassis satellite-management redundancy-groups]
      user@aggregation-device-1# set chassis-id chassis-id-number
      ```

      For example, to assign aggregation device 1 the chassis ID of 1:

      ```
      [edit chassis satellite-management redundancy-groups]
      user@aggregation-device-1# set chassis-id 1
      ```

   b. Specify the name and ID number of the redundancy group on aggregation device 1.

      The redundancy group name and ID number must be the same on all aggregation devices.

      ```
      [edit chassis satellite-management redundancy-groups]
      user@aggregation-device-1# set redundancy-group-name redundancy-group-id
      redundancy-group-id-number
      ```

      For example, to create a redundancy group named evpn-red-grp that uses redundancy group ID 10 on aggregation device 1:

      ```
      [edit chassis satellite-management redundancy-groups]
      user@aggregation-device-1# set evpn-red-grp redundancy-group-id 10
      ```

   c. For each EVPN peer of aggregation device 1, specify the loopback IP address of the peer and enable EVPN:

      ```
      [edit chassis satellite-management redundancy-groups redundancy-group-name]
      ```

```
user@aggregation-device-1# set protocol evpn peer-ip IP address
...
```

For example, if the loopback addresses of aggregation devices 2, 3, and 4 are 127.2.2.2, 127.3.3.3, 127.4.4.4, respectively:

```
[edit chassis satellite-management redundancy-groups evpn-red-grp]
user@aggregation-device-1# set protocol evpn peer-ip 127.2.2.2
user@aggregation-device-1# set protocol evpn peer-ip 127.3.3.3
user@aggregation-device-1# set protocol evpn peer-ip 127.4.4.4
```

d. On aggregation device 1, define the satellite devices that are part of the redundancy group.

All satellite devices in the Junos Fusion Data Center should be included in the redundancy group.

The satellite device devices included in the redundancy group must be the same on all aggregation devices.

To add satellite devices to the redundancy group:

```
[edit chassis satellite-management redundancy-groups]
user@aggregation-device-1# set redundancy-group-name satellite
satellite-device-fpc-IDs
```

For example, to include satellite devices using FPC IDs 100-220 to the redundancy group named evpn-red-grp:

```
[edit chassis satellite-management redundancy-groups]
user@aggregation-device-1# set evpn-red-grp satellite 100-220
```

5. Configure OSPF as the internal routing protocol for the aggregation devices in the EVPN core fabric.

You configure OSPF by creating an OSPF area in which you include the loopback interface of aggregation device 1 and the interfaces that connect to aggregation devices 2, 3, and 4. Also, you must configure BFD liveness detection, which can quickly detect if an interface to a peer aggregation device is down. This feature is strongly recommended in the highly scaled Junos Fusion Data Center.

```
[edit protocols ospf]
user@aggregation-device-1# set area area-id interface loopback-interface passive
user@aggregation-device-1# set area area-id interface interface-to-aggregation-device-2
bfd-liveness-detection minimum-interval milliseconds
user@aggregation-device-1# set area area-id interface interface-to-aggregation-device-2
bfd-liveness-detection multiplier number
user@aggregation-device-1# set area area-id interface interface-to-aggregation-device-3
bfd-liveness-detection minimum-interval milliseconds
user@aggregation-device-1# set area area-id interface interface-to-aggregation-device-3
bfd-liveness-detection multiplier number
user@aggregation-device-1# set area area-id interface interface-to-aggregation-device-4
bfd-liveness-detection minimum-interval milliseconds
user@aggregation-device-1# set area area-id interface interface-to-aggregation-device-4
bfd-liveness-detection multiplier number
```

For example, to configure OSPF area 0.0.0.0, include the loopback interface of aggregation device 1 and the interfaces to aggregation devices 2, 3, and 4 in area 0, and configure BFD liveness detection:

```
[edit protocols ospf]
user@aggregation-device-1# set area 0.0.0.0 interface lo0.0 passive
user@aggregation-device-1# set area 0.0.0.0 interface et-0/0/2.0 bfd-liveness-detection
minimum-interval 1000
user@aggregation-device-1# set area 0.0.0.0 interface et-0/0/2.0 bfd-liveness-detection
multiplier 3
user@aggregation-device-1# set area 0.0.0.0 interface et-0/0/1.0 bfd-liveness-detection
minimum-interval 1000
user@aggregation-device-1# set area 0.0.0.0 interface et-0/0/1.0 bfd-liveness-detection
multiplier 3
user@aggregation-device-1# set area 0.0.0.0 interface et-0/0/34.0 bfd-liveness-detection
minimum-interval 1000
user@aggregation-device-1# set area 0.0.0.0 interface et-0/0/34.0 bfd-liveness-detection
multiplier 3
```

With the BFD liveness detection settings of 1000 milliseconds and a multiplier or 3, BFD declares that an interface with a peer aggregation device is down 3000 milliseconds after receiving the last reply from the interface.

6. Configure an IBGP overlay between the aggregation devices, and include the EVPN signaling network layer reachability information (NLRI) in the IBGP group.

```
[edit protocols bgp]
user@aggregation-device-1# set group group-name type internal
user@aggregation-device-1# set group group-name local-address
aggregation-device-1-loopback-ip-address
user@aggregation-device-1# set group group-name family evpn signaling
ser@aggregation-device-1# set group bgp-peers bfd-liveness-detection minimum-interval
milliseconds
user@aggregation-device-1# set group bgp-peers bfd-liveness-detection multiplier number
user@aggregation-device-1# set group group-name neighbor
aggregation-device-2-loopback-ip-address
user@aggregation-device-1# set group group-name neighbor
aggregation-device-3-loopback-ip-address
user@aggregation-device-1# set group group-name neighbor
aggregation-device-4-loopback-ip-address
```

For example, if the loopback addresses of aggregation devices 2, 3, and 4 are 127.2.2.2, 127.3.3.3, 127.4.4.4, respectively:

```
[edit protocols bgp]
user@aggregation-device-1# set group bgp-peers type internal
user@aggregation-device-1# set group bgp-peers local-address 127.1.1.1
user@aggregation-device-1# set group bgp-peers family evpn signaling
user@aggregation-device-1# set group bgp-peers bfd-liveness-detection minimum-interval
1000
user@aggregation-device-1# set group bgp-peers bfd-liveness-detection multiplier 3
user@aggregation-device-1# set group bgp-peers neighbor 127.2.2.2
user@aggregation-device-1# set group bgp-peers neighbor 127.3.3.3
user@aggregation-device-1# set group bgp-peers neighbor 127.4.4.4
```

With the BFD liveness detection settings of 1000 milliseconds and a multiplier or 3, BFD declares that a peer aggregation device is down 3000 milliseconds after receiving the last reply from the device.

7. For each VLAN you plan to set up, configure an integrated routing and bridging (IRB) interface.

   When configuring each IRB interface, also specify a virtual gateway address (VGA), which configures the IRB interface as a default Layer 3 gateway. This gateway enables non-virtualized (bare-metal) servers connected to extended ports to route their traffic from one VLAN to another non-virtualized server or virtual machine (VM) in another VLAN.

```
[edit interfaces]
user@aggregation-device-1# set irb unit logical-unit-identifier family inet address
irb-ip-address/ip-prefix virtual-gateway-address default-gateway-ip-address
...
```

   For example:

```
[edit interfaces]
user@aggregation-device-1# set irb unit 1001 family inet address 10.1.1.1/24
virtual-gateway-address 10.1.1.10
user@aggregation-device-1# set irb unit 2001 family inet address 10.1.2.1/24
virtual-gateway-address 10.1.2.10
user@aggregation-device-1# set irb unit 3001 family inet address 10.1.3.1/24
virtual-gateway-address 10.1.3.10
user@aggregation-device-1# set irb unit 1002 family inet address 10.2.1.1/24
virtual-gateway-address 10.2.1.10
user@aggregation-device-1# set irb unit 2002 family inet address 10.2.2.1/24
virtual-gateway-address 10.2.2.10
user@aggregation-device-1# set irb unit 3002 family inet address 10.2.3.1/24
virtual-gateway-address 10.2.3.10
user@aggregation-device-1# set irb unit 1003 family inet address 10.3.1.1/24
virtual-gateway-address 10.3.1.10
user@aggregation-device-1# set irb unit 2003 family inet address 10.3.2.1/24
virtual-gateway-address 10.3.2.10
user@aggregation-device-1# set irb unit 3003 family inet address 10.3.3.1/24
virtual-gateway-address 10.3.3.10
user@aggregation-device-1# set irb unit 1004 family inet address 10.4.1.1/24
virtual-gateway-address 10.4.1.10
user@aggregation-device-1# set irb unit 2004 family inet address 10.4.2.1/24
virtual-gateway-address 10.4.2.10
user@aggregation-device-1# set irb unit 3004 family inet address 10.4.3.1/24
virtual-gateway-address 10.4.3.10
user@aggregation-device-1# set irb unit 1005 family inet address 10.5.1.1/24
virtual-gateway-address 10.5.1.10
user@aggregation-device-1# set irb unit 2005 family inet address 10.5.2.1/24
virtual-gateway-address 10.5.2.10
user@aggregation-device-1# set irb unit 3005 family inet address 10.5.3.1/24
virtual-gateway-address 10.5.3.10
...
```

   This sample configuration does not explicitly specify a MAC address for the default gateway. This configuration uses the MAC address that is automatically generated by the aggregation device.

NOTE: When you specify an IPv4 address for the VGA, the aggregation device automatically generates 00:00:5e:00:01:01 as the media access control (MAC) address for the default gateway. When you specify an IPv6 address, the aggregation device automatically generates 00:00:5e:00:02:01 as the MAC address for the default gateway.

If needed, you can explicitly configure an IPv4 or IPv6 MAC address for a default gateway by using the **virtual-gateway-v4-mac** or **virtual-gateway-v6-mac** configuration statement at the **[edit interfaces name irb unit *logical-unit-number*]** hierarchy level. After you perform this configuration, the automatically generated MAC address is overridden by the configured MAC address.

8. Configure VLANs, extended ports, and routing instances on aggregation device 1. The configuration of these entities should be exactly the same on all aggregation devices, so we recommend using the configuration synchronization feature. To implement this feature, create a configuration group that includes commands that you want synchronized to the other aggregation devices, and apply the configuration group to the aggregation devices.

   Example for a Junos Fusion Data Center with four QFX10002 switches, which support one Routing Engine, as Aggregation Devices 1, 2, 3, and 4:

```
[edit]
user@aggregation-device-1# set groups configuration-group-name when peers
aggregation-device-management-ip-address
...
user@aggregation-device-1# set apply-groups configuration-group-name

[edit]
user@aggregation-device-1# set groups overlay when peers 172.16.75.10 (AD1)
user@aggregation-device-1# set groups overlay when peers 172.16.75.20 (AD2)
user@aggregation-device-1# set groups overlay when peers 172.16.75.30 (AD3)
user@aggregation-device-1# set groups overlay when peers 172.16.75.40 (AD4)
user@aggregation-device-1# set apply-groups overlay
```

   Example for a Junos Fusion Data Center with four QFX10008 switches, which support two Routing Engines, as Aggregation Devices 1, 2, 3, and 4

   The following sample configuration assumes that you configured an IP address for each Routing Engine on each aggregation device as described in step 2d.

```
[edit]
user@aggregation-device-1# set groups configuration-group-name when peers
em0.0-ip-address
...
user@aggregation-device-1# set apply-groups configuration-group-name

[edit]
user@aggregation-device-1# set groups overlay when peers 172.16.75.10 (AD1, re0)
user@aggregation-device-1# set groups overlay when peers 172.16.75.20 (AD1, re1)
user@aggregation-device-1# set groups overlay when peers 172.16.75.30 (AD2, re0)
```

```
user@aggregation-device-1# set groups overlay when peers 172.16.75.40 (AD2, re1)
user@aggregation-device-1# set groups overlay when peers 172.16.75.50 (AD3, re0)
user@aggregation-device-1# set groups overlay when peers 172.16.75.60 (AD3, re1)
user@aggregation-device-1# set groups overlay when peers 172.16.75.70 (AD4, re0)
user@aggregation-device-1# set groups overlay when peers 172.16.75.80 (AD4, re1)
user@aggregation-device-1# set apply-groups overlay
```

a. Configure VLANs, and map them to IRB interfaces and VXLAN network identifiers (VNIs).

```
[edit]
user@aggregation-device-1# set groups configuration-group-name vlans vlan-name
vlan-id vlan-id
user@aggregation-device-1# set groups configuration-group-name vlans vlan-name
l3-interface irb.logical-unit-identifier
user@aggregation-device-1# set groups configuration-group-name vlans vlan-name
vxlan vni vni
...
```

For example:

```
[edit]
user@aggregation-device-1# set groups overlay vlans VLAN-1001 vlan-id 1001
user@aggregation-device-1# set groups overlay vlans VLAN-1001 l3-interface irb.1001
user@aggregation-device-1# set groups overlay vlans VLAN-1001 vxlan vni 1001
user@aggregation-device-1# set groups overlay vlans VLAN-2001 vlan-id 2001
user@aggregation-device-1# set groups overlay vlans VLAN-2001 l3-interface irb.2001
user@aggregation-device-1# set groups overlay vlans VLAN-2001 vxlan vni 2001
user@aggregation-device-1# set groups overlay vlans VLAN-3001 vlan-id 3001
user@aggregation-device-1# set groups overlay vlans VLAN-3001 l3-interface irb.3001
user@aggregation-device-1# set groups overlay vlans VLAN-3001 vxlan vni 3001
user@aggregation-device-1# set groups overlay vlans VLAN-1002 vlan-id 1002
user@aggregation-device-1# set groups overlay vlans VLAN-1002 l3-interface irb.1002
user@aggregation-device-1# set groups overlay vlans VLAN-1002 vxlan vni 1002
user@aggregation-device-1# set groups overlay vlans VLAN-2002 vlan-id 2002
user@aggregation-device-1# set groups overlay vlans VLAN-2002 l3-interface irb.2002
user@aggregation-device-1# set groups overlay vlans VLAN-2002 vxlan vni 2002
user@aggregation-device-1# set groups overlay vlans VLAN-3002 vlan-id 3002
user@aggregation-device-1# set groups overlay vlans VLAN-3002 l3-interface irb.3002
user@aggregation-device-1# set groups overlay vlans VLAN-3002 vxlan vni 3002
```

b. Configure the extended ports.

In this sample configuration, extended ports 201/0/1 and 201/0/2 are both mapped to aggregated Ethernet interface ae2, on which a trunk port is established and VLANs 1001-1320, 2001-2320, and 3001-3320 are enabled.

```
[edit]
user@aggregation-device-1# set groups overlay chassis aggregated-devices ethernet
device-count 350
user@aggregation-device-1# set groups overlay interfaces xe-204/0/1 ether-options
802.3ad ae2
user@aggregation-device-1# set groups overlay interfaces xe-204/0/2 ether-options
802.3ad ae2
user@aggregation-device-1# set groups overlay interfaces ae2 mtu 9000
user@aggregation-device-1# set groups overlay interfaces ae2 aggregated-ether-options
lacp active
```

```
user@aggregation-device-1# set groups overlay interfaces ae2 aggregated-ether-options
lacp periodic fast
user@aggregation-device-1# set groups overlay interfaces ae2 unit 0 family
ethernet-switching interface-mode trunk
user@aggregation-device-1# set groups overlay interfaces ae2 unit 0 family
ethernet-switching vlan members 1001-1320
user@aggregation-device-1# set groups overlay interfaces ae2 unit 0 family
ethernet-switching vlan members 2001-2320
user@aggregation-device-1# set groups overlay interfaces ae2 unit 0 family
ethernet-switching vlan members 3001-3320
```

NOTE: On aggregated Ethernet interface ae0, the MTU is set to 9000 bytes to accommodate the transmission of E-channel tag (ETAG) headers, which are included in data packets exchanged between aggregation devices and satellite devices.

c. Configure the routing instances.

This sample configuration creates a virtual routing instance and includes IRB and loopback interfaces and OSPF area 0.0.0.0. An EBGP group is also created and included in the routing instance.

```
[edit]
user@aggregation-device-1# set groups overlay routing-instances routing-instance-name
instance-type virtual-router
user@aggregation-device-1# set groups overlay routing-instances routing-instance-name
interface irb.logical-unit-identifier
...
user@aggregation-device-1# set groups overlay routing-instances routing-instance-name
interface lo0.logical-unit-identifier
user@aggregation-device-1# set groups overlay routing-instances routing-instance-name
protocols bgp group external-peers type external
user@aggregation-device-1# set groups overlay routing-instances routing-instance-name
protocols bgp group external-peers export send-direct
user@aggregation-device-1# set groups overlay routing-instances routing-instance-name
protocols bgp group external-peers local-as autonomous-system-number
user@aggregation-device-1# set groups overlay routing-instances routing-instance-name
protocols bgp group external-peers multipath
user@aggregation-device-1# set groups overlay routing-instances routing-instance-name
protocols bgp group external-peers bfd-liveness-detection minimum-interval milliseconds
user@aggregation-device-1# set groups overlay routing-instances routing-instance-name
protocols bgp group external-peers bfd-liveness-detection multiplier number
user@aggregation-device-1# set groups overlay routing-instances routing-instance-name
protocols bgp group external-peers neighbor ip-address peer-as
autonomous-system-number
...
user@aggregation-device-1# set groups overlay routing-instances routing-instance-name
protocols ospf area area-number interface lo0.logical-unit-identifier
```

For example:

```
[edit]
user@aggregation-device-1# set groups overlay routing-instances VRF-T1 instance-type
virtual-router
```

```
user@aggregation-device-1# set groups overlay routing-instances VRF-T1 interface
irb.1001
user@aggregation-device-1# set groups overlay routing-instances VRF-T1 interface
irb.2001
user@aggregation-device-1# set groups overlay routing-instances VRF-T1interface
irb.3001
user@aggregation-device-1# set groups overlay routing-instances VRF-T1 interface
irb.1002
user@aggregation-device-1# set groups overlay routing-instances VRF-T1 interface
irb.2002
user@aggregation-device-1# set groups overlay routing-instances VRF-T1 interface
irb.3002
...
user@aggregation-device-1# set groups overlay routing-instances VRF-T1 interface
lo0.32
user@aggregation-device-1# set groups overlay routing-instances VRF-T1 protocols
bgp group external-peers type external
user@aggregation-device-1# set groups overlay routing-instances VRF-T1 protocols
bgp group external-peers export send-direct
user@aggregation-device-1# set groups overlay routing-instances VRF-T1 protocols
bgp group external-peers local-as 64500
user@aggregation-device-1# set groups overlay routing-instances VRF-T1 protocols
bgp group external-peers multipath
user@aggregation-device-1# set groups overlay routing-instances VRF-T1 protocols
bgp group external-peers bfd-liveness-detection minimum-interval 1000
user@aggregation-device-1# set groups overlay routing-instances VRF-T1 protocols
bgp group external-peers bfd-liveness-detection multiplier 3
user@aggregation-device-1# set groups overlay routing-instances VRF-T1 protocols
bgp group external-peers neighbor 172.0.0.254 peer-as 64501
user@aggregation-device-1# set groups overlay routing-instances VRF-T1 protocols
bgp group external-peers neighbor 172.0.0.253 peer-as 64502
user@aggregation-device-1# set groups overlay routing-instances VRF-T1 protocols
ospf area 0.0.0.0 interface lo0.32
```

9. Configure switch options to set a route distinguisher and VRF target, and to associate the loopback interface (lo0) with the aggregation device.

```
[edit switch-options]
user@aggregation-device-1# set vtep-source-interface lo0.logical-unit-identifier
user@aggregation-device-1# set route-distinguisher (as-number:id | ip-address:id)
user@aggregation-device-1# set vrf-target community-name
```

For example:

```
[edit switch-options]
user@aggregation-device-1# set vtep-source-interface lo0.0
user@aggregation-device-1# set route-distinguisher 127.1.1.1:1
user@aggregation-device-1# set vrf-target target:100:1
```

10. Configure EVPN, and specify VXLAN as the data plane encapsulation method.

```
[edit protocols evpn]
user@aggregation-device-1# set encapsulation vxlan
user@aggregation-device-1# set multicast-mode ingress-replication
user@aggregation-device-1# set default-gateway no-gateway-community
user@aggregation-device-1# set extended-vni-list all
```


Installing Satellite Software and Adding Satellite Devices to the Junos Fusion

Use this procedure to install satellite software onto a satellite device. A satellite device is not active in a Junos Fusion until satellite software is installed.

Before you begin:

- Ensure you have prepared your satellite device, as described in the "Preparing a Switch Running Junos OS to Become a Satellite Device" section.
- Complete the other steps in this document—created cascade ports, associated FPC slot IDs with satellite devices, and created the satellite software upgrade groups—to ensure the satellite software can be successfully installed.
- Expand the size of the /user disk partition on each Routing Engine in each aggregation device by issuing the **request system storage user-disk** command. The system will reboot to complete the operation.

NOTE: A QFX10002 switch supports one Routing Engine, and the QFX10008 and QFX10016 switches support two Routing Engines.

To install satellite software onto a satellite device and add it to the Junos Fusion Data Center.

1. Decide how satellite software will be installed onto the satellite devices:
   - Autoconversion (Recommended)—Satellite software is installed onto satellite device automatically when it is cabled to the aggregation device.
   - Manual conversion—Satellite software is installed when user enters a CLI command from aggregation device to install satellite software.
   - Pre-installation—Satellite software is installed on satellite device before the satellite device is cabled into the Junos Fusion Data Center.
2. Install the satellite software, or configure how it will be installed:
   - To enable autoconversion for a satellite device, enter the following commands from an aggregation device:

     ```
     [edit]
     user@aggregation-device# set chassis satellite-management auto-satellite-conversion satellite slot-id
     user@aggregation-device# commit
     ```

     For example, to automatically convert FPC **101** into a satellite device:

     ```
     [edit]
     user@aggregation-device# set chassis satellite-management auto-satellite-conversion satellite 101
     user@aggregation-device# commit
     ```

In this example, autoconversion installs the satellite software associated with FPC slot 101, which was defined in the satellite software upgrade group configuration.

The process to install the satellite software onto the satellite device with the specified FPC slot ID does not begin until the configuration is committed. In addition, the satellite device must meet the following conditions:

- Must run a Junos OS release that supports Junos Fusion Data Center.
- Must have factory-default settings or have autoconversion enabled.
- For an EX4300 switch that serves as a satellite device, the uplink port must not be a Virtual Chassis port (VCP).

- To manually install satellite software onto a satellite device, enter the following command from an aggregation device:

  `user@aggregation-device>` **request chassis satellite interface *interface-name* device-mode satellite**

  where *interface-name* is the cascade port interface on the aggregation device:

  For example, to manually configure the switch that is connecting the satellite device to interface xe-0/0/1 on the aggregation device into a satellite device:

  `user@aggregation-device>` **request chassis satellite interface xe-0/0/1 device-mode satellite**

- To pre-install software onto a satellite device before connecting it into the Junos Fusion Data Center:

  a. Copy a version of satellite software onto the satellite device running Junos OS.

     For EX4300 switches, you must install a PPC satellite software image in order to pre-install satellite software.

     Satellite software images can be downloaded from the Junos Fusion software download page.

  b. Enter the following command from the satellite device:

     `user@satellite-device>` **request chassis device-mode satellite *URL-to-satellite-software***

     For instance, to install the satellite software package **satellite-ppc-3.4R2.0-signed.tgz** stored in the **/var/tmp/** folder on an EX4300 switch:

     `user@satellite-device>` **request chassis device-mode satellite /var/tmp/satellite-ppc-3.4R2.0-signed.tgz**

  c. Cable the satellite device directly to the aggregation device.

NOTE: The satellite device version is compared against the satellite device version associated with the software upgrade group upon insertion into the Junos Fusion. If the satellite device is running a version of satellite software that is different than it's associated satellite software upgrade group, the satellite software upgrade group installs the satellite software associated with the satellite software upgrade group onto the satellite device.

Related Documentation

- Junos Fusion Hardware and Software Compatibility Matrices
- Understanding Junos Fusion Data Center Software and Hardware Requirements
- Verifying Connectivity, Device States, Satellite Software Versions, and Operations in a Junos Fusion on page 111
- Verifying EVPN Operations in a Junos Fusion Data Center on page 122
- Understanding Junos Fusion Data Center Components on page 6
- Understanding Software in a Junos Fusion Data Center on page 17

Configuring Satellite Device Alarm Handling Using an Environment Monitoring Satellite Policy in a Junos Fusion

This topic shows how to configure the alarm levels for link-down events on a satellite device in a Junos Fusion.

To configure system alarm handling in a Junos Fusion using an environment monitoring satellite policy:

1. Log in to the aggregation device.

2. Create and name the environment monitoring satellite policy:

   ```
   [edit]
   user@aggregation-device# set policy-options satellite-policies
   environment-monitoring-policy policy-name
   ```

   For example, to create an environment monitoring satellite policy named **linkdown-alarm-monitoring-1**:

   ```
   [edit]
   user@aggregation-device# set policy-options satellite-policies
   environment-monitoring-policy linkdown-alarm-monitoring-1
   ```

3. Configure the link-down alarm behavior for the Junos Fusion using one or both of the following methods:

- Set the default link-down alarm to one setting whenever it is experienced in a Junos Fusion:

  ```
  [edit policy-options satellite-policies environment-monitoring-policy
  policy-name]
  user@aggregation-device# set alarm linkdown [ignore | red | yellow]
  ```

  For example, to set the default link-down alarm to ignore for **linkdown-alarm-monitoring-1**:

  ```
  [edit policy-options satellite-policies environment-monitoring-policy
  linkdown-alarm-monitoring-1]
  user@aggregation-device# set alarm linkdown ignore
  ```

- Set the link-down alarm behavior for a specific satellite device hardware model using terms:

  ```
  [edit policy-options satellite-policies environment-monitoring-policy
  policy-name]
  user@aggregation-device# set term term-name from product-model model-name alarm
  linkdown [ignore | red | yellow]
  ```

  where *term-name* is the user-defined name of the term, and *model-name* defines the product model of the satellite device that uses the satellite policy.

  You can apply environment monitoring satellite policies individually or globally. You can, therefore, create multiple policies using the instructions in this step and apply them to different satellite devices in your Junos Fusion, when needed.

  You can use multiple terms in the same environment monitoring satellite policy.

  For example, if you wanted to configure EX4300 switches acting as satellite devices to send yellow alarms when link-down errors occur while QFX5100 switches acting as satellite devices send red alarms for the same condition:

  ```
  [edit policy-options satellite-policies environment-monitoring-policy
  linkdown-alarm-monitoring-1]
  user@aggregation-device# set term ex4300-yellow from product-model EX4300* alarm
  linkdown yellow
  user@aggregation-device# set term qfx5100-red from product-model QFX5100* alarm
  linkdown red
  ```

4. Associate the environment monitoring satellite policy with a Junos Fusion configuration.

   - To associate an environment monitoring satellite policy for all satellite devices in a Junos Fusion:

     ```
     [edit chassis satellite-management]
     user@aggregation-device# set environment-monitoring-policy policy-name
     ```

     For example, to associate an environment monitoring satellite policy named **linkdown-alarm-monitoring-1** for all satellite devices in a Junos Fusion:

     ```
     [edit chassis satellite-management]
     user@aggregation-device# set environment-monitoring-policy
     linkdown-alarm-monitoring-1
     ```

- To associate an environment monitoring satellite policy for select FPC IDs in a Junos Fusion:

  ```
  [edit chassis satellite-management fpc slot-id]
  user@aggregation-device# set environment-monitoring-policy policy-name
  ```

  For example, to associate an environment monitoring satellite policy named **linkdown-alarm-monitoring-1** for the satellite device associated with FPC ID 101 in a Junos Fusion:

  ```
  [edit chassis satellite-management fpc 101]
  user@aggregation-device# set environment-monitoring-policy
  linkdown-alarm-monitoring-1
  ```

You can configure a different environment monitoring policy for a single satellite device using the **fpc *slot-id*** when an environment monitoring policy for all satellite devices is configured. The environment monitoring policy for the FPC is enabled in cases when both an individual and global environment monitoring policy are configured.

5. Commit the configuration to both Routing Engines:

   ```
   [edit]
   user@aggregation-device# commit synchronize
   ```

   If you want to commit the configuration to the active Routing Engine only:

   ```
   [edit]
   user@aggregation-device# commit
   ```

Related Documentation

- *Configuring Junos Fusion Provider Edge*
- *Configuring or Expanding a Junos Fusion Enterprise*

CHAPTER 3

Junos Fusion Data Center Configuration Statements

aging-timer (Junos Fusion)

Syntax aging-timer *aging-timer*;

Hierarchy Level [edit chassis satellite-management]

Release Information Statement introduced in Junos OS Release 14.2R3 for Junos Fusion Provider Edge.
Statement introduced in Junos OS Release 17.2R1 for Junos Fusion Data Center.

Description Configure the aging timer on the aggregation device in a Junos Fusion.

The aging timer is used on the aggregation device to specify the amount of time, in minutes, to maintain the device state of an unreachable satellite device before deleting the satellite device from the Junos Fusion.

If the unreachable satellite device is discovered before the aging timer expires, the satellite device is reactivated in the Junos Fusion without having to restore its device state.

Default The default aging time is 10 minutes.

Options The remaining statements are explained separately.

Range: 2 through 60,000 minutes

Required Privilege Level admin—To view this statement in the configuration.
admin-control—To add this statement to the configuration.

Related Documentation

- *Configuring or Expanding a Junos Fusion Enterprise*
- *Configuring Junos Fusion Provider Edge*

alarm (Satellite Policies)

Syntax

```
alarm {
  linkdown [ignore | red | yellow]
}
```

Hierarchy Level

[edit policy-options satellite-policies environment-monitoring-policy *policy-name*]

Release Information

Statement introduced in Junos OS Release 14.2R3 for Junos Fusion Provider Edge.
Statement introduced in Junos OS Release 16.1R1 for Junos Fusion Enterprise.
Statement introduced in Junos OS Release 17.2R1 for Junos Fusion Data Center.

Description

Configure the link down alarm that is sent within the Junos Fusion whenever a satellite device experiences a link-down error.

Default

Link-down alarms are not sent on satellite devices in a Junos Fusion until an environment monitoring policy is configured.

Options

The remaining statements are explained separately.

Required Privilege Level

admin—To view this statement in the configuration.
admin-control—To add this statement to the configuration.

Related Documentation

- Configuring Satellite Device Alarm Handling Using an Environment Monitoring Satellite Policy in a Junos Fusion on page 73
- Understanding Satellite Policies in a Junos Fusion on page 36

alias (Junos Fusion)

Syntax alias *alias*;

Hierarchy Level [edit chassis satellite-management fpc *slot-id*]

Release Information Statement introduced in Junos OS Release 14.2R3 for Junos Fusion Provider Edge.
Statement introduced in Junos OS Release 16.1R1 for Junos Fusion Enterprise.
Statement introduced in Junos OS Release 17.2R1 for Junos Fusion Data Center.

Description Configure an alias to label a satellite device.

Satellite device alias configuration is optional, but recommended. In a Junos Fusion, satellite device aliases assist with administration tasks, such as monitoring satellite devices using **show** command outputs, as well as with some configuration tasks that provide an option to identify a satellite device by its alias.

Default Satellite devices are not assigned an alias, by default.

Options ***alias***—The user-defined text name of the alias.

Required Privilege Level admin—To view this statement in the configuration.
admin-control—To add this statement to the configuration.

Related Documentation

- *Configuring or Expanding a Junos Fusion Enterprise*
- *Configuring Junos Fusion Provider Edge*

auto-satellite-conversion (Junos Fusion)

Syntax

```
auto-satellite-conversion {
  satellite [slot-id | range | all];
}
```

Hierarchy Level

[edit chassis satellite-management]

Release Information

Statement introduced in Junos OS Release 14.2R3 for Junos Fusion Provider Edge.
Statement introduced in Junos OS Release 16.1R1 for Junos Fusion Enterprise.
Statement introduced in Junos OS Release 17.2R1 for Junos Fusion Data Center.

Description

Enable automatic satellite conversion in a Junos Fusion.

Automatic satellite conversion automatically configures a switch into a satellite device when it is cabled into the aggregation device.

Additional configuration steps are required to add satellite devices to a Junos Fusion using automatic satellite conversion. See *Configuring Junos Fusion Provider Edge* or *Configuring or Expanding a Junos Fusion Enterprise*.

Options

The remaining statements are explained separately.

Required Privilege Level

admin—To view this statement in the configuration.
admin-control—To add this statement to the configuration.

Related Documentation

- *Configuring or Expanding a Junos Fusion Enterprise*
- *Configuring Junos Fusion Provider Edge*

cascade-port

Syntax cascade-port;

Hierarchy Level [edit interfaces *interface-name*]

Release Information Statement introduced in Junos OS Release 14.2R3 for Junos Fusion Provider Edge.
Statement introduced in Junos OS Release 16.1R1 for Junos Fusion Enterprise.
Statement introduced in Junos OS Release 17.2R1 for Junos Fusion Data Center.

Description Configure the specified interface on the aggregation device in a Junos Fusion into a cascade port.

Additional configuration is required to configure cascade ports on a Junos Fusion. See *Configuring Junos Fusion Provider Edge* or *Configuring or Expanding a Junos Fusion Enterprise*.

Default No interfaces are cascade ports, by default.

Options ***interface-name***—Specifies the name of the interface.

Required Privilege Level admin—To view this statement in the configuration.
admin-control—To add this statement to the configuration.

Related Documentation

- *Configuring or Expanding a Junos Fusion Enterprise*
- *Configuring Junos Fusion Provider Edge*

cascade-ports

Syntax cascade-ports *interface-name*;

Hierarchy Level [edit chassis satellite-management fpc *slot-id*]

Release Information Statement introduced in Junos OS Release 14.2R3 for Junos Fusion Provider Edge.
Statement introduced in Junos OS Release 16.1R1 for Junos Fusion Enterprise.
Statement introduced in Junos OS Release 17.2R1 for Junos Fusion Data Center.

Description Associate a cascade port with an FPC slot ID number in a Junos Fusion.

The FPC slot ID of the satellite device is determined by the value entered as the FPC *slot-id*. For instance, if the **set chassis satellite-management fpc 105 cascade-ports xe-0/0/1** statement is used to configure interface xe-0/0/1 into a cascade port, the satellite device that connects to interface xe-0/0/1 has an FPC slot ID of 105 in the Junos Fusion.

A Junos Fusion provides two methods of assigning an FPC identifier: Unique ID-based FPC identification and connectivity-based FPC identification. Unique ID-based FPC identification maps an FPC slot ID to a satellite device's MAC address or serial number, while connectivity-based FPC identification maps an FPC slot ID to a cascade port. This statement is used to assign an FPC ID using connectivity-based FPC identification by mapping an FPC slot ID to a cascade port.

In a Junos Fusion, each satellite device must be mapped to an FPC identifier (FPC ID). The FPC ID is used for Junos Fusion configuration, monitoring, and maintenance. Interface names—which are identified using the *type-fpc / pic / port* format—use the FPC ID as the *fpc* variable when the satellite device is participating in a Junos Fusion. For instance, built-in port 2—a Gigabit Ethernet interface on a satellite device that is using 101 as it's FPC ID— uses ge-101/0/2 as its interface name.

For additional information on the role of FPC slot IDs in a Junos Fusion, see *Understanding Junos Fusion Provider Edge Components* or *Understanding Junos Fusion Enterprise Components*.

Default No FPC slot IDs are associated with satellite devices, by default.

Options ***interface-name***—Specifies the name of the interface.

Required Privilege Level admin—To view this statement in the configuration.
admin-control—To add this statement to the configuration.

Related Documentation
- *Configuring or Expanding a Junos Fusion Enterprise*
- *Configuring Junos Fusion Provider Edge*

description (Junos Fusion)

Syntax description *description*;

Hierarchy Level [edit chassis satellite-management fpc *slot-id*]

Release Information Statement introduced in Junos OS Release 14.2R3 for Junos Fusion Provider Edge.
Statement introduced in Junos OS Release 16.1R1 for Junos Fusion Enterprise.
Statement introduced in Junos OS Release 17.2R1 for Junos Fusion Data Center.

Description Configure a description for the satellite device.

The description is optional and used for information purposes only.

Default Satellite devices do not have descriptions, by default.

Options ***description***—A text description of the satellite device.

Required Privilege Level admin—To view this statement in the configuration.
admin-control—To add this statement to the configuration.

Related Documentation

- *Configuring Junos Fusion Provider Edge*
- *Configuring or Expanding a Junos Fusion Enterprise*

designated-event-forwarding (Junos Fusion)

Syntax designated-event-forwarding;

Hierarchy Level [edit chassis satellite-management]

Release Information Statement introduced in Junos OS Release 18.1R2-S2 for Junos Fusion Data Center.

Description Use this command to prevent an SNMP trap from being generated from each aggregation device in an EVPN Junos Fusion. When you enable **designated-event-forwarding**, an SNMP trap request is only sent by the aggregation device selected as the designated router.

Default Designated event forwarding is disabled.

Required Privilege Level admin—To view this statement in the configuration.
admin-control—To add this statement to the configuration.

Related Documentation

- Understanding Designated Event Forwarding of SNMP Traps in an EVPN Junos Fusion Data Center on page 34
- Understanding EVPN in a Junos Fusion Data Center on page 26

dual-dr

Syntax

```
dual-dr {
   enhanced;
}
```

Hierarchy Level

[edit dynamic-profiles *name* protocols pim interface *interface-name*],
[edit logical-systems *name* protocols pim interface *interface-name*],
[edit logical-systems *name* routing-instances *name* protocols pim interface *interface-name*],
[edit protocols pim interface *interface-name*]
[edit routing-instances *name* protocols pim interface *interface-name*]

Release Information

Statement introduced in Junos OS Release 13.2X51 for the QFX Series.
Statement introduced in Junos OS Release 16.1 for the MX Series.
Statement with **enhanced** option introduced in Junos OS Release 17.2R1 for Junos Fusion Data Center.

Description

Enable PIM dual designated router mode for a pair of Multichassis Link Aggregation Group (MC-LAG) peers managing VLAN multicast traffic and Layer 3 multicast traffic over IRB interfaces.

PIM dual designated router mode sets up one device in a pair of MC-LAG peers as a primary designated router (DR) and the other device as a standby or backup DR for redundancy in managing multicast packet forwarding. Both devices join the multicast forwarding tree and receive multicast traffic. If the primary device fails, the standby quickly takes over forwarding multicast packets with minimal traffic disruption.

In the default or backwards-compatible dual designated router mode (no **enhanced** option specified), both DRs forward packets for a short time while negotiating which device will forward the multicast traffic. After PIM forwarder negotiation, only one device continues to forward traffic. If the primary DR fails, the standby can take over forwarding multicast packets upon detecting the failure. When the primary DR comes back online and is receiving multicast traffic again, it resumes forwarding and invokes PIM forwarder negotiation again to reduce duplicate packet load.

In enhanced dual designated router mode (**enhanced** option specified), both the primary and standby DRs receive multicast traffic, but only the primary DR forwards the packets, skipping PIM forwarder negotiation. Upon primary DR failure, the standby takes over forwarding immediately, and also switches to primary role. When the prior primary DR comes back online, it assumes the standby role, receiving but not forwarding multicast traffic. The new primary DR continues forwarding multicast packets without any traffic interruption, and again no duplicate packet traffic is generated.

If you want to enable dual designated router mode, we recommend using the **enhanced** option, if available, to achieve optimal convergence time in resuming multicast traffic flow both when a DR fails and when it comes back online again.

Options

None—Enable default dual designated router mode (available for backwards compatibility).

enhanced—Enable enhanced PIM dual designated router mode (recommended if available).

Required Privilege Level

routing—To view this statement in the configuration.
routing-control—To add this statement to the configuration.

Related Documentation

- Understanding Layer 3 Multicast Convergence Enhancements for Dual Aggregation Devices in a Junos Fusion on page 955
- *Multichassis Link Aggregation Features, Terms, and Best Practices*

environment-monitoring-policy (satellite-management)

Syntax environment-monitoring-policy *policy-name*;

Hierarchy Level [edit chassis satellite-management]
[edit chassis satellite-management fpc *slot-id*]

Release Information Statement introduced in Junos OS Release 14.2R3 for Junos Fusion Provider Edge.
Statement introduced in Junos OS Release 16.1R1 for Junos Fusion Enterprise.
Statement introduced in Junos OS Release 17.2R1 for Junos Fusion Data Center.

Description Enable an environment monitoring policy in a Junos Fusion.

You configure environment monitoring policies for a Junos Fusion in the [**edit policy-options environment-monitoring-policy *policy-name***] hierarchy.

You can configure an environment monitoring policy in a Junos Fusion for a single satellite device using the **fpc *slot-id*** option, or for all satellite devices in the Junos Fusion by not specifying the **fpc *slot-id*** option.

You can configure a different environment monitoring policy for a single satellite device using the **fpc *slot-id*** when an environment monitoring policy for all satellite devices is configured. The environment monitoring policy for the FPC is enabled in cases when both an individual and global environment monitoring policy are configured.

Default No environment monitoring policies for the Junos Fusion are present.

If you enable an environment monitoring policy in a Junos Fusion without specifying the **fpc *slot-id*** option, the environment monitoring policy is applied for all satellite devices in the Junos Fusion.

Options ***policy-name***—Specifies the name of the environment monitoring policy.

The *policy-name* name is defined as part of the environment monitoring policy configuration procedure, which is handled in the [**edit policy-options environment-monitoring-policy *policy-name***] hierarchy.

Required Privilege Level admin—To view this statement in the configuration.
admin-control—To add this statement to the configuration.

Related Documentation

- Configuring Satellite Device Alarm Handling Using an Environment Monitoring Satellite Policy in a Junos Fusion on page 73
- Understanding Satellite Policies in a Junos Fusion on page 36

environment-monitoring-policy (satellite-policies)

Syntax

```
environment-monitoring-policy policy-name{
  alarm {
    linkdown [ignore | red | yellow]
  }
  term term-name{
    from {
      product-model model-name;
    }
  }
}
```

Hierarchy Level

[edit policy-options satellite-policies]

Release Information

Statement introduced in Junos OS Release 14.2R3 for Junos Fusion Provider Edge.
Statement introduced in Junos OS Release 16.1R1 for Junos Fusion Enterprise.
Statement introduced in Junos OS Release 17.2R1 for Junos Fusion Data Center.

Description

Configure an environment monitoring satellite policy for a device or devices in a Junos Fusion.

An environment monitoring satellite policy is used to configure alarm behavior on satellite devices in a Junos Fusion.

The environment monitoring policy is applied to a Junos Fusion using the environment-monitoring-policy statement in the [edit *chassis* satellite-management] or [edit *chassis* satellite-management fpc *slot-id*] hierarchy levels.

Options

policy-name—Specifies the user-defined name of the environment monitoring policy.

The remaining statements are explained separately.

Required Privilege Level

admin—To view this statement in the configuration.
admin-control—To add this statement to the configuration.

Related Documentation

- Configuring Satellite Device Alarm Handling Using an Environment Monitoring Satellite Policy in a Junos Fusion on page 73
- Understanding Satellite Policies in a Junos Fusion on page 36

fpc (Junos Fusion)

Syntax

```
fpc slot-id{
   alias alias;
   cascade-ports interface-name;
   description description;
   environment-monitoring-policy policy;
   serial-numberserial-number;
   system-id mac-address;
   uplink-failure-detection {
      candidate-uplink-policy policy;
   }
   local switching;
   selective-vlan-switching{
      routing-instance routing-instance;
   }
}
```

Hierarchy Level

[edit chassis satellite-management]

Release Information

Statement introduced in Junos OS Release 14.2R3 for Junos Fusion Provider Edge.
Statement introduced in Junos OS Release 16.1R1 for Junos Fusion Enterprise.
Statement introduced in Junos OS Release 17.2R1 for Junos Fusion Data Center.
local-switching and **selective-vlan-switching** introduced in Junos OS Release 17.2R1 for Junos Fusion Provider Edge.

Description

Configure an FPC identifier for a satellite device within a Junos Fusion, or modify the configuration of an existing satellite device in a Junos Fusion.

Options

slot-id—Specifies the FPC identifier of the device and functions as the FPC identifier in the interface name when configuring satellite device interfaces.

In a Junos Fusion Data Center, the *slot-id* must have a value in the range of 65 to 254.

In a Junos Fusion Enterprise or Junos Fusion Provider Edge, the *slot-id* must have a value of 34 or greater.

local switching—Enables local-switching for all the ports on the satellite device.

The remaining statements are explained separately.

Required Privilege Level

admin—To view this statement in the configuration.
admin-control—To add this statement to the configuration.

Related Documentation

- *Configuring Junos Fusion Provider Edge*
- *Configuring or Expanding a Junos Fusion Enterprise*

linkdown (satellite-policies alarm)

Syntax linkdown [ignore | red | yellow]

Hierarchy Level [edit policy-options satellite-policies environment-monitoring-policy *policy-name* alarm]

Release Information Statement introduced in Junos OS Release 14.2R3 for Junos Fusion Provider Edge.
Statement introduced in Junos OS Release 16.1R1 for Junos Fusion Enterprise.
Statement introduced in Junos OS Release 17.2R1 for Junos Fusion Data Center.

Description Configure the alarm behavior when an Ethernet link goes down on a satellite device in a Junos Fusion.

The configured alarm behavior can be applied to any satellite device in the Junos Fusion. The alarm behavior is applied to satellite devices using environment monitoring policies.

Options **ignore**—Do not signal an alarm when an Ethernet link-down event occurs.

red—Raise a major alarm when an Ethernet link-down event occurs.

yellow—Raise a minor alarm when an Ethernet link-down event occurs.

Required Privilege Level admin—To view this statement in the configuration.
admin-control—To add this statement to the configuration.

Related Documentation

- Configuring Satellite Device Alarm Handling Using an Environment Monitoring Satellite Policy in a Junos Fusion on page 73
- Understanding Satellite Policies in a Junos Fusion on page 36

peers-synchronize

Syntax peers-synchronize;

Hierarchy Level [edit system commit]

Release Information Statement introduced in Junos OS Release 14.2R6 for the MX Series and Junos Fusion.
Statement introduced in Junos OS Release 15.1X53-D60 for the QFX Series.
Statement introduced in Junos OS Release 16.1R1 for the EX Series.

Description Configure the **commit** command to automatically perform a **peers-synchronize** action between peers. The local peer (or requesting peer) on which you enable the **peers-synchronize** statement copies and loads its configuration to the remote (or responding) peer. Each peer then performs a syntax check on the configuration file being committed. If no errors are found, the configuration is activated and becomes the current operational configuration on both peers.

Required Privilege Level system—To view this statement in the configuration.
system-control—To add this statement to the configuration.

Related Documentation

- *delta-export*
- *fast-synchronize*
- *persist-groups-inheritance*
- *server*
- *synchronize*

redundancy-groups (Junos Fusion)

Syntax

```
redundancy-groups {
  chassis-id number;
  redundancy-group-name {
    redundancy-group-id redundancy-group-id-number;
    protocol {
      evpn {
        peer-ip [ IP address ]
      }
    }
    peer-chassis-id peer-chassis-id-number {
      inter-chassis-link interface-name;
      authentication-key string;
      liveness-detection {
      detection-time {
        threshold milliseconds;
      }
      minimum-interval milliseconds;
      minimum-receive-interval milliseconds;
      multiplier number;
      no-adaptation;
      transmit-interval {
        minimum-interval milliseconds;
        threshold milliseconds;
      }
      version (1 | automatic);
    }
    session-establishment-hold-time seconds;
    traceoptions;
    }
    no-auto-iccp-provisioning;
    no-auto-vlan-provisioning;
    satellite satellite-device-fpc-IDs;
    }
  }
}
```

Hierarchy Level [edit chassis satellite-management]

Release Information Statement introduced in Junos OS Release 17.2R1 for Junos Fusion Data Center.

Description Configure a redundancy group for Junos Fusion. A Junos Fusion topology supports one redundancy group that includes up to four devices—the aggregation devices—while also including a configuration parameter that allows users to specify that the satellite devices also belong to the redundancy group.

In a Junos Fusion with MC-LAG, a redundancy group is required to enable ICCP. ICCP is automatically provisioned on the interchassis link, but you can manually configure the ICCP parameters. Any ICCP parameter you configure overrides the default settings. You can also disable automatic ICCP provisioning.

In Junos Fusion Data Center with EVPN, a redundancy group configuration enables the EVPN protocol. ICCP configuration is not required when configuring Junos Fusion with EVPN.

Options The remaining statements are explained separately.

Required Privilege Level admin—To view this statement in the configuration.
admin-control—To add this statement to the configuration.

Related Documentation

- *Configuring or Expanding a Junos Fusion Enterprise*
- *Configuring Junos Fusion Provider Edge*
- Understanding Automatic ICCP Provisioning and Automatic VLAN Provisioning of an Interchassis Link on page 847

satellite (Junos Fusion Automatic Satellite Conversion)

Syntax satellite [*slot-id* | *range* | all];

Hierarchy Level [edit chassis satellite-management auto-satellite-conversion]

Release Information Statement introduced in Junos OS Release 14.2R3 for Junos Fusion Provider Edge.
Statement introduced in Junos OS Release 16.1R1 for Junos Fusion Enterprise.
Statement introduced in Junos OS Release 17.2R1 for Junos Fusion Data Center.

Description Specify the interface to enable automatic software conversion in a Junos Fusion.

The device that is cabled to the slot specified in this command is automatically converted into a satellite device.

Additional configuration steps are required to add satellite devices to a Junos Fusion using automatic satellite conversion. See *Configuring or Expanding a Junos Fusion Enterprise* or *Configuring Junos Fusion Provider Edge*.

Options ***slot-id***—Specifies the FPC slot identifier of the device that will be automatically converted into a satellite device.

The FPC identifier must be mapped to a cascade port interface before this command is operational. See *Configuring or Expanding a Junos Fusion Enterprise* or *Configuring Junos Fusion Provider Edge*.

range—Specifies a range of FPC slot identifiers that will automatically be converted into satellite devices. For instance, to specify that FPC IDs 103, 104, and 105 should be automatically converted into satellite devices, enter a *range* of **103-105**.

all—Specifies that all FPC slot identifiers in the Junos Fusion will automatically be converted into satellite devices.

Required Privilege Level admin—To view this statement in the configuration.
admin-control—To add this statement to the configuration.

Related Documentation

- *Configuring Junos Fusion Provider Edge*
- *Configuring or Expanding a Junos Fusion Enterprise*

satellite (Junos Fusion Satellite Device Homing)

Syntax satellite [*slot-id* |*slot-id-range* | all];

Hierarchy Level [edit chassis satellite-management single-home]

Release Information Statement introduced in Junos OS Release 14.2R3.
Statement introdcued in Junos OS Release 16.1R1 for Junos Fusion Enterprise.
Statement introdcued in Junos OS Release 17.2R1 for Junos Fusion Data Center.

Description Specify which satellite device links are single-homed to the aggregation device.

You must enter this statement to configure a Junos Fusion when the aggregation device is running Junos OS Release 14.2R3 or 14.2R4. You are not required to enter this command when the aggregation device is running Junos OS Release 14.2R5 or later.

Options ***slot-id***—Specifies that a link from a specified satellite device is single-homed to the aggregation device. The *slot-id* is the satellite device member number.

slot-id-range—Specifies that the links from a range of specified satellite devices are single-homed to the aggregation device. The *slot-id-range* includes the satellite device member numbers.

all—Specifies that all links from satellite devices are single-homed to the aggregation device.

Required Privilege Level admin—To view this statement in the configuration.
admin-control—To add this statement to the configuration.

Related Documentation

- *Configuring Junos Fusion Provider Edge*
- *Configuring or Expanding a Junos Fusion Enterprise*

satellite (Junos Fusion Satellite Software Upgrade Groups)

Syntax satellite [*slot-id* | *range* | all];

Hierarchy Level [edit chassis satellite-management upgrade-groups *upgrade-group-name*]

Release Information Statement introduced in Junos OS Release 14.2R3 for Junos Fusion Provider Edge.
Statement introduced in Junos OS Release 16.1R1 for Junos Fusion Enterprise.
Statement introduced in Junos OS Release 17.2R1 for Junos Fusion Data Center.

Description Specify the satellite device to add to the satellite software upgrade group.

This statement is entered on an aggregation device in a Junos Fusion. Software upgrade groups are configured and managed using the aggregation device.

Options ***slot-id***—Specifies the FPC slot identification number of the satellite device that is being added to the satellite software upgrade group.

range—Specifies a range of FPC slot identifiers to add to the satellite software upgrade group. For instance, to specify that FPC IDs 103, 104, and 105 should be automatically converted into satellite devices, enter a *range* of **103-105**.

all—Specifies that all FPC slot identifiers in the Junos Fusion are added to the satellite software upgrade group.

The remaining statements are explained separately.

Required Privilege Level admin—To view this statement in the configuration.
admin-control—To add this statement to the configuration.

Related Documentation

- *Configuring Junos Fusion Provider Edge*
- *Configuring or Expanding a Junos Fusion Enterprise*

satellite-management (Junos Fusion)

Syntax

```
satellite-management {
  aging-timer aging-timer;
  auto-satellite-conversion {
    satellite [slot-id | range | all];
  }
  cluster cluster-name{
    cascade-ports interface-name;
    cluster-id cluster-id-number;
    fpc slot-id{
      alias alias;
      description description;
      member-id member-id-number;
      system-id mac-address;
    }
    }
  designated-event-forwarding
  environment-monitoring-policy policy;
  firewall
    family family-name {
      filter filter-name {
        term term-name {
          from {
            match-conditions;
          }
          then {
            action;
            action-modifiers;
          }
        }
      }
    }
  fpc slot-id{
    alias alias;
    cascade-ports interface-name;
    description description;
    environment-monitoring-policy policy;
    serial-numberserial-number;
    system-id mac-address;
    uplink-failure-detection {
      candidate-uplink-policy policy;
    }
  }
  psu {
    redundancy {
      n-plus-n;
    }
  }
  redundancy-groups {
    chassis-id number;
    redundancy-group-name {
      redundancy-group-id redundancy-group-id-number;
      peer-chassis-id peer-chassis-id-number {
```

```
            inter-chassis-link interface-name;
            no-auto-iccp-provisioning;
            no-auto-vlan-provisioning;
            satellite satellite-device-fpc-IDs;
            }
        }
    }
    single-home {
        satellite [slot-id |slot-id-range | all];
    }
    upgrade-groups upgrade-group-name {
        satellite [slot-id | range | all];
    }
    uplink-failure-detection {
        candidate-uplink-policy policy;
    }
}
```

Hierarchy Level [edit chassis]

Release Information Statement introduced in Junos OS Release 14.2R3 for Junos Fusion Provider Edge.
Statement introduced in Junos OS Release 16.1R1 for Junos Fusion Enterprise.
Statement introduced in Junos OS Release 17.2R1 for Junos Fusion Data Center.

Description Configure and manage a Junos Fusion.

If you enter the **delete chassis satellite-management** command to delete a Junos Fusion configuration, we recommend also rebooting the Routing Engines on your device to maximize device performance.

NOTE: In a Junos Fusion Data Center with EVPN wherein VXLAN encapsulation is used, firewall filters with next-interface or next-ip actions are not supported.

Options The remaining statements are explained separately.

Required Privilege Level admin—To view this statement in the configuration.
admin-control—To add this statement to the configuration.

Related Documentation

- *Configuring or Expanding a Junos Fusion Enterprise*
- *Configuring Junos Fusion Provider Edge*

serial-number (Junos Fusion)

Syntax serial-number *serial-number*;

Hierarchy Level [edit chassis satellite-management fpc *slot-id*]

Release Information Statement introduced in Junos OS Release 14.2R3 for Junos Fusion Provider Edge.
Statement introdcued in Junos OS Release 16.1R1 for Junos Fusion Enterprise.
Statement introdcued in Junos OS Release 17.2R1 for Junos Fusion Data Center.

Description Bind the specified FPC slot ID to a satellite device based on the serial number.

A Junos Fusion provides two methods of assigning an FPC identifier: Unique ID-based FPC identification and connectivity-based FPC identification. Unique ID-based FPC identification maps an FPC slot ID to a satellite device's MAC address or serial number, while unique ID-based FPC identification maps an FPC slot ID to a cascade port. This statement is used to assign an FPC ID using unique ID-based FPC identification by mapping the FPC slot ID to the satellite device's serial number.

In a Junos Fusion, each satellite device must be mapped to an FPC identifier (FPC ID). The FPC ID is used for Junos Fusion configuration, monitoring, and maintenance. Interface names—which are identified using the *type-fpc / pic / port* format—use the FPC ID as the *fpc* variable when the satellite device is participating in a Junos Fusion. For instance, built-in port 2—a Gigabit Ethernet interface on a satellite device that is using 101 as its FPC ID—uses ge-101/0/2 as its interface name.

For additional information on the role of FPC slot IDs in a Junos Fusion, see *Understanding Junos Fusion Enterprise Components* or *Understanding Junos Fusion Provider Edge Components*.

If the serial number that is configured using this statement does not match the serial number of the satellite device, the device is not converted into a satellite device.

Default No FPC slot IDs are associated with satellite devices, by default.

Options ***serial-number***—Specifies the serial number of the satellite device.

Required Privilege Level admin—To view this statement in the configuration.
admin-control—To add this statement to the configuration.

Related Documentation

- *Configuring Junos Fusion Provider Edge*
- *Configuring or Expanding a Junos Fusion Enterprise*

single-home (Junos Fusion)

Syntax

```
single-home {
   satellite [slot-id |slot-id-range | all];
}
```

Hierarchy Level

[edit chassis satellite-management]

Release Information

Statement introduced in Junos OS Release 14.2R3 for Junos Fusion Provider Edge.
Statement introdcued in Junos OS Release 16.1R1 for Junos Fusion Enterprise.
Statement introdcued in Junos OS Release 17.2R1 for Junos Fusion Data Center.

Description

Specify that the links connecting the satellite device to the aggregation device are connected to the aggregation device only.

Options

The remaining statements are explained separately.

Required Privilege Level

admin—To view this statement in the configuration.
admin-control—To add this statement to the configuration.

Related Documentation

- *Configuring Junos Fusion Provider Edge*
- *Configuring or Expanding a Junos Fusion Enterprise*

system-id (Junos Fusion)

Syntax system-id *mac-address*;

Hierarchy Level [edit chassis satellite-management fpc *slot-id*]

Release Information Statement introduced in Junos OS Release 14.2R3 for Junos Fusion Provider Edge.
Statement introdcued in Junos OS Release 16.1R1 for Junos Fusion Enterprise.
Statement introdcued in Junos OS Release 17.2R1 for Junos Fusion Data Center.

Description Assign the specified FPC identifier to the satellite device based on the satellite device's MAC address.

For instance, if you wanted the satellite device using MAC address **01:02:03:AA:BB:CC** to be assigned FPC identifier 101, enter the **set chassis satellite-management fpc 101 system-id 01:02:03:AA:BB:CC** statement.

A Junos Fusion provides two methods of assigning an FPC identifier: Unique ID-based FPC identification and connectivity-based FPC identification. Unique ID-based FPC identification maps an FPC slot ID to a satellite device's MAC address or serial number, while connectivity-based FPC identification maps an FPC slot ID to a cascade port. This statement is used to assign an FPC ID using unique ID-based FPC identification by mapping the FPC slot ID to the satellite device's MAC address.

In a Junos Fusion, each satellite device must be mapped to an FPC identifier (FPC ID). The FPC ID is used for Junos Fusion configuration, monitoring, and maintenance. Interface names—which are identified using the *type-fpc / pic / port* format—use the FPC ID as the *fpc* variable when the satellite device is participating in a Junos Fusion. For instance, built-in port 2—a gigabit Ethernet interface on a satellite device that is using 101 as its FPC ID— uses ge-101/0/2 as its interface name.

For additional information on the role of FPC slot IDs in a Junos Fusion, see *Understanding Junos Fusion Provider Edge Components* or *Understanding Junos Fusion Enterprise Components*.

If the serial number that is configured using this statement does not match the serial number of the satellite device, the device is not converted into a satellite device.

If the MAC address that is configured using this statement does not match the MAC address of the satellite device, the device is not converted into a satellite device.

Default No FPC slot IDs are associated with satellite devices, by default.

Options ***mac-address***—Specifies the MAC address of the satellite device.

Required Privilege Level admin—To view this statement in the configuration.
admin-control—To add this statement to the configuration.

Related Documentation

- *Configuring Junos Fusion Provider Edge*
- *Configuring or Expanding a Junos Fusion Enterprise*

upgrade-groups (Junos Fusion)

Syntax

```
upgrade-groups upgrade-group-name {
  satellite [slot-id | range | all];
}
```

Hierarchy Level

[edit chassis satellite-management]

Release Information

Statement introduced in Junos OS Release 14.2R3 for Junos Fusion Provider Edge.
Statement introdcued in Junos OS Release 16.1R1 for Junos Fusion Enterprise.
Statement introdcued in Junos OS Release 17.2R1 for Junos Fusion Data Center.

Description

Create and name a satellite software upgrade group for a Junos Fusion, or specify an existing satellite software upgrade group to configure.

A satellite software upgrade group is a group of satellite devices that are designated to upgrade to the same satellite software version using the same satellite software package. One Junos Fusion can contain multiple software upgrade groups, and multiple software upgrade groups should be configured in most Junos Fusions to avoid network downtimes during satellite software installations.

The two most common methods of installing satellite software in a Junos Fusion—autoconverting a device into a satellite device when it is cabled into an aggregation device and manually converting a device that is cabled into an aggregation device into a satellite device—require a configured satellite software upgrade group.

Software upgrade groups are configured and managed from the aggregation device.

To associate a satellite software package with a satellite software upgrade group, use the **request system software add** ***package-name*** **upgrade-group** ***upgrade-group-name*** command.

This statement is entered on an aggregation device in a Junos Fusion. Software upgrade groups are configured and managed from the aggregation device.

The software upgrade group configurations must match exactly—including the same *package-name* and *upgrade-group-name*—in every Junos Fusion with dual aggregation devices to avoid satellite device downtime.

All satellite devices in a satellite device cluster are associated with a single satellite software upgrade group, which is automatically created when a satellite device cluster becomes part of a Junos Fusion. The satellite software upgrade group is named after the satellite device cluster name, and ensures that all satellite devices in the cluster run the same version of satellite software. See *Understanding Software in a Junos Fusion Enterprise* for additional information on software management for a satellite device cluster.

Default

No satellite software upgrade groups are present, by default.

A satellite software upgrade group with the name of the satellite device cluster is created automatically when a satellite device cluster is created.

Options

upgrade-group-name—Specifies the user-defined name for the satellite software upgrade group.

The remaining statements are explained separately.

Required Privilege Level

admin—To view this statement in the configuration.
admin-control—To add this statement to the configuration.

Related Documentation

- *Configuring or Expanding a Junos Fusion Enterprise*
- *Configuring Junos Fusion Provider Edge*

CHAPTER 4

Junos Fusion Data Center Administration

Managing Satellite Software Upgrade Groups in a Junos Fusion

This topic discusses maintaining satellite software upgrade groups in a Junos Fusion. For more information on the process for creating a satellite software upgrade group, see *Configuring Junos Fusion Provider Edge* or *Configuring or Expanding a Junos Fusion Enterprise*.

A satellite software upgrade group is a group of satellite devices that are designated to upgrade to the same satellite software version using the same satellite software package. One Junos Fusion can contain multiple software upgrade groups, and multiple software upgrade groups should be configured in most Junos Fusions to avoid network downtimes during satellite software installations.

When a satellite device is added to a Junos Fusion, the aggregation device checks if the satellite device is using an FPC ID that is included in a satellite software upgrade group. If the satellite device is using an FPC ID that is part of a satellite software upgrade group, the device upgrades its satellite software to the version of software associated with the satellite software upgrade group - unless it is already running the defined version.

When the satellite software package associated with an existing satellite software group is changed, the satellite software for all member satellite devices is upgraded using a throttled upgrade. The throttled upgrade ensures that the aggregation device is not overwhelmed with providing satellite software simultaneously to many satellite devices.

The two most common methods of installing satellite software—autoconverting a device into a satellite device when it is cabled into an aggregation device and manually converting a device that is cabled into an aggregation device into a satellite device—require a configured satellite software upgrade group.

Software upgrade groups are configured and managed from the aggregation device. All satellite devices in a satellite device cluster are part of the same software upgrade group, and a software upgrade group with the name of the satellite device cluster is automatically created when the satellite device cluster is created.

Creating a Satellite Software Upgrade Group

If your satellite device is a member of a satellite device cluster, a satellite software upgrade group with the name of the satellite device cluster is automatically created when the satellite device cluster is created. This satellite software upgrade group must be used to manage the satellite software for all member satellite devices in the satellite device cluster.

For information on creating a satellite software upgrade group for a satellite device that is not part of a satellite device cluster, see *Configuring Junos Fusion Provider Edge* or *Configuring or Expanding a Junos Fusion Enterprise*.

Adding Satellite Devices to a Satellite Software Upgrade Group

To add a satellite device to an existing satellite software upgrade group, enter the **set chassis satellite-management upgrade-groups** ***upgrade-group-name*** **satellite** ***slot-id-or-range*** command:

```
[edit]
user@aggregation-device# set chassis satellite-management upgrade-groups
upgrade-group-name satellite slot-id-or-range
```

where *upgrade-group-name* is the name of the existing satellite software upgrade group, and the *slot-id-or-range* is the FPC slot ID or range of FPC slot IDs of the satellite devices that are being added to the upgrade group.

For example, to add FPC slot IDs 121, 122, and 123 to a satellite software upgrade group named **group1**:

```
[edit]
user@aggregation-device# set chassis satellite-management upgrade-groups group1 satellite
121-123
```

Additionally, you can use the **all** statement as your *slot-id-or-range* to include all satellite devices in the Junos Fusion in the satellite software upgrade group.

For example, to add all satellite devices in the Junos Fusion to a satellite software upgrade group named **group1**:

```
[edit]
user@aggregation-device# set chassis satellite-management upgrade-groups group1 satellite
all
```

Removing a Satellite Device from a Satellite Software Upgrade Group

To remove a satellite device from an existing satellite software upgrade group, enter the **delete chassis satellite-management upgrade-groups *upgrade-group-name* satellite *slot-id-or-range*** statement to delete the statements that initially added the member satellite devices to the satellite software upgrade group.

```
[edit]
user@aggregation-device# delete chassis satellite-management upgrade-groups
upgrade-group-name satellite slot-id-or-range
```

where *upgrade-group-name* is the name of the existing satellite software upgrade group, and the *slot-id-or-range* is the FPC slot ID or range of FPC slot IDs of the satellite devices that are being added to the upgrade group.

In cases where you want to remove some FPC slot IDs that were configured within a range of FPC slot IDs, you might consider re-creating the satellite software group by first deleting it, then re-creating it. To delete the satellite software upgrade group:

```
[edit]
user@aggregation-device# delete chassis satellite-management upgrade-groups
upgrade-group-name
```

You can then re-create the satellite software upgrade group and add satellite devices using the **set chassis satellite-management upgrade-groups *upgrade-group-name* satellite *slot-id-or-range*** statement:

```
[edit]
user@aggregation-device# set chassis satellite-management upgrade-groups
upgrade-group-name satellite slot-id-or-range
```

For more information on the satellite software upgrade group creation process, see *Configuring Junos Fusion Provider Edge* or *Configuring or Expanding a Junos Fusion Enterprise*.

Modifying the Satellite Software Used by a Satellite Software Upgrade Group

To associate a new satellite software image with the software upgrade group:

Before you begin:

- Ensure that a satellite software package is downloaded to the location where you will use it to install the satellite software.

```
user@aggregation-device> request system software add package-name upgrade-group
upgrade-group-name
```

NOTE: A satellite software *upgrade-group-name* can be a user-configured upgrade group or the name of a satellite device cluster.

To associate a satellite software image named **satellite-2.0R1.2-signed.tgz** that is currently stored in the **/var/tmp/** directory from the aggregation device to the upgrade group named **group1**:

```
user@aggregation-device> request system software add /var/tmp/satellite-2.0R1.2-signed.tgz
upgrade-group group1
```

To associate a satellite software package that was previously installed on the aggregation device with a software upgrade group:

```
user@aggregation-device> request system software add version version upgrade-group group1
```

For instance:

```
user@aggregation-device> request system software add version 2.0R1.2 upgrade-group group1
```

The satellite software upgrade group is associated with the software package after either of these commands are entered.

NOTE: A satellite software upgrade group can be a user-configured upgrade group or the name of a satellite device cluster.

If the group was already associated with a satellite software upgrade group, the previous satellite software package associated with the software group remains the second option for updating satellite software for the satellite software upgrade group. You can disassociate any satellite software package from a satellite software upgrade group using the instructions in the next section.

Deleting Associated Satellite Software from a Satellite Software Upgrade Group

This section describes how to delete a satellite software package association from a satellite software upgrade group.

This procedure is always optional. You can always update the satellite software associated with a satellite software upgrade group using the procedure in the previous section, without deleting the satellite software from the satellite software upgrade group.

When a new satellite software package is associated with a satellite software upgrade, the previous satellite software package remains associated with the upgrade group as a backup option. The satellite software upgrade group can be associated with up to two satellite software packages, so no other satellite software packages can be associated with the satellite software upgrade group.

This process disassociates the specified satellite software package from the list of potential packages used by a satellite software upgrade group. It is useful for maintenance

purposes only, like if you wanted to ensure a satellite software upgrade group was never associated with a specific satellite software package.

To disassociate a satellite software image from a satellite software upgrade group:

```
user@aggregation-device> request system software delete upgrade-group upgrade-group-name
```

where the *upgrade-group-name* is the name of the upgrade group that was assigned by the user.

For example, to delete the current satellite software image association to the upgrade group named **group1**:

```
user@aggregation-device> request system software delete upgrade-group group1
```

Deleting Satellite Software on the Aggregation Device

This section describes how to remove a satellite software package from a Junos Fusion system. This will remove the software from the aggregation device as well as any association with any satellite software upgrade groups. This should be done when another satellite software version is available and will free up the space occupied by the software being removed.

NOTE: We recommend deleting satellite software that is not in use to free up space on a QFX10000 acting as an aggregation device.

```
user@aggregation-device> request system software delete version version
```

For example:

```
user@aggregation-device> request system software delete version 2.0R1.2
```

Related Documentation

- *Configuring Junos Fusion Provider Edge*
- *Configuring or Expanding a Junos Fusion Enterprise*

Verifying Connectivity, Device States, Satellite Software Versions, and Operations in a Junos Fusion

This topic provides information on common procedures to verify connectivity, device states, satellite software versions, and other operations in a Junos Fusion. It covers:

- Verifying the Satellite Software Version on page 120
- Verifying the Devices and Software Used in a Satellite Software Upgrade Group on page 121

Verifying a Junos Fusion Configuration

Purpose Verify that a device is recognized as a satellite device by the aggregation device.

Action Enter the **show chassis satellite** command and review the output.

NOTE: On a Junos Fusion Data Center with a QFX10000 switch in the aggregation device role, the number of the FPC in the interface name of the cascade ports is always 0.

```
user@aggregation-device> show chassis satellite
                         Device          Cascade      Port       Extended Ports
Alias            Slot    State           Ports        State      Total/Up
qfx5100-24q-01   100     Online          xe-0/0/1     online     9/2
                                         xe-1/3/0     online
qfx5100-24q-02   101     Online          xe-0/0/2     online     20/10
                                         xe-1/3/1     online
qfx5100-24q-03   102     Online          xe-0/0/3     online     16/4
                                         xe-1/3/2     online
qfx5100-24q-04   103     Online          xe-0/0/4     absent     13/3
                                         xe-1/3/3     online
ex4300-01        109     Online          xe-1/0/1     online     49/2
ex4300-02        110     Online          xe-1/0/2     online     49/2
```

Meaning Use the output of **show chassis satellite** to confirm the following connections in a Junos Fusion:

- Whether a satellite device is recognized at all by the aggregation device. If the satellite device does not appear in the **show chassis satellite** output, then it is not recognized by the aggregation device as a satellite device.
- The state of a particular satellite device, via the **Device State** output.
- The state of the cascade port connection, via the **Cascade State** output.

Verifying Basic Junos Fusion Connectivity

Purpose Verify that all satellite devices are recognized by the aggregation device, and that all cascade and extended ports are recognized.

Action Enter the **show chassis satellite** command on the aggregation device.

NOTE: On a Junos Fusion Data Center with a QFX10000 switch in the aggregation device role, the number of the FPC in the interface name of the cascade ports is always 0.

```
user@aggregation-device> show chassis satellite
                         Device          Cascade      Port       Extended Ports
Alias            Slot    State           Ports        State      Total/Up
qfx5100-24q-01   100     Online          xe-0/0/1     online     9/2
                                         xe-1/3/0     online
qfx5100-24q-02   101     Online          xe-0/0/2     online     20/12
                                         xe-1/3/1     online
qfx5100-24q-03   102     Online          xe-0/0/3     online     16/6
                                         xe-1/3/2     online
qfx5100-24q-04   103     Online          xe-0/0/4     online     16/4
                                         xe-1/3/3     online
qfx5100-24q-05   104     Online          xe-0/0/5     online     13/3
                                         xe-1/3/4     online
qfx5100-24q-06   105     Online          xe-0/0/6     online     24/15
                                         xe-1/3/5     online
qfx5100-24q-07   106     Online          xe-0/0/7     online     24/15
                                         xe-1/3/6     online
qfx5100-24q-08   107     Online          xe-0/0/8     online     21/12
                                         xe-1/3/7     online
ex4300-01        109     Online          xe-1/0/1     online     49/2
ex4300-02        110     Online          xe-1/0/2     online     49/2
ex4300-03        111     Online          xe-1/0/3     online     49/2
ex4300-04        112     Online          xe-1/0/4     online     49/11
ex4300-05        113     Online          xe-1/0/5     online     49/11
ex4300-06        114     Online          xe-1/0/6     online     49/11
ex4300-07        115     Online          xe-1/0/7     online     49/11
ex4300-08        116     Online          xe-1/1/0     online     49/11
ex4300-09        117     Online          xe-1/1/1     online     49/11
ex4300-10        118     Online          xe-1/1/2     online     49/11
ex4300-11        119     Online          xe-1/1/3     online     49/11
ex4300-12        120     Online          xe-1/1/4     online     49/11
ex4300-13        121     Online          xe-1/1/5     online     49/11
ex4300-14        122     Online          xe-1/1/6     online     49/11
ex4300-15        123     Online          xe-1/1/7     online     49/11
ex4300-16        124     Online          xe-1/2/1     online     49/11
ex4300-17        125     Online          xe-1/2/2     online     49/11
ex4300-18        126     Online          xe-1/2/3     online     49/2
ex4300-19        127     Online          xe-1/2/4     online     49/1
ex4300-20        128     Online          xe-1/2/5     online     49/1
ex4300-21        129     Online          xe-1/2/6     online     49/1
ex4300-22        130     Online          xe-1/2/7     online     49/1
```

Meaning The output confirms:

- Each listed satellite device—the satellite devices are listed by alias-name in the **Alias** column or by FPC slot ID in the **Slot** column—is recognized by the aggregation device, because the **Device State** output is **Online** for every listed satellite device.

- Each cascade port is operational, because **Port State** is **online** for every cascade port. The cascade port is the port on the aggregation device that connects to the satellite device.
- The number of available and active extended ports for each satellite device, using the **Extended Ports total** and **Extended Ports up** outputs. The number of extended ports varies by satellite devices, and in this output the total number of extended ports includes both network-facing extended ports as well as uplink ports.

Verifying the Satellite Device Hardware Model

Purpose Verify the hardware model of each satellite device in the Junos Fusion.

Action Enter the **show chassis satellite terse** command on the aggregation device.

```
user@aggregation-device> show chassis satellite terse
       Device                              Extended Ports
Slot   State            Model              Total/Up    Version
101    Online           QFX5100-48S-6Q     7/6         3.0R1.0
102    Online           QFX5100-48S-6Q     7/6         3.0R1.0
103    Online           QFX5100-48S-6Q     6/4         3.0R1.0
104    Online           QFX5100-48S-6Q     14/14       3.0R1.0
105    Online           QFX5100-48S-6Q     18/18       3.0R1.0
106    Online           QFX5100-48S-6Q     17/16       3.0R1.0
107    Online           EX4300-48T         52/6        3.0R1.0
108    Online           EX4300-48T         52/13       3.0R1.0
109    Online           EX4300-48T         51/13       3.0R1.0
110    Online           EX4300-48T         51/14       3.0R1.0
111    Online           EX4300-48T         51/13       3.0R1.0
112    Online           EX4300-48T         51/12       3.0R1.0
113    Online           EX4300-48T         51/13       3.0R1.0
114    Online           QFX5100-24Q-2P     17/13       3.0R1.0
```

Meaning The output shows the device model of each satellite device in the **Device Model** output, which are listed by FPC slot identification number using the **Slot** output.

This command is also useful for verifying the version satellite software running on each satellite device, as the version is listed in the **Version** output.

Verifying Cascade Port and Uplink Port State

Purpose Verify that the cascade port and uplink port interfaces are up.

Action Enter the **show chassis satellite interface** command:

```
user@aggregation-device> show chassis satellite interface

Interface          State        Type
lo0                Up           Loopback
```



```
sd-101/0/0        Up          Satellite
sd-102/0/0        Up          Satellite
sd-103/0/0        Up          Satellite
sd-104/0/0        Up          Satellite
sd-105/0/0        Up          Satellite
sd-106/0/0        Up          Satellite
sd-107/0/0        Up          Satellite
sd-108/0/0        Up          Satellite
sd-109/0/0        Up          Satellite
sd-110/0/0        Up          Satellite
sd-111/0/0        Up          Satellite
sd-112/0/0        Up          Satellite
sd-113/0/0        Up          Satellite
sd-114/0/0        Up          Satellite
xe-0/0/1          Up          Cascade
xe-0/0/2          Up          Cascade
xe-0/0/3          Up          Cascade
xe-0/0/4          Up          Cascade
xe-0/0/5          Up          Cascade
xe-0/0/6          Up          Cascade
xe-0/0/7          Up          Cascade
xe-0/0/8          Up          Cascade
xe-0/0/9          Up          Cascade
xe-0/2/0          Up          Cascade
xe-0/2/1          Up          Cascade
xe-0/2/2          Up          Cascade
xe-0/2/3          Up          Cascade
xe-0/2/4          Up          Cascade
xe-0/2/5          Up          Cascade
xe-0/2/6          Up          Cascade
xe-0/2/7          Up          Cascade
```

```
xe-1/0/1          Up          Cascade
xe-1/0/2          Up          Cascade
xe-1/0/3          Up          Cascade
xe-1/2/1          Up          Cascade
xe-1/2/2          Up          Cascade
xe-1/2/3          Up          Cascade
xe-2/0/0          Up          Cascade
xe-2/0/1          Up          Cascade
xe-2/0/2          Up          Cascade
xe-2/0/3          Up          Cascade
xe-2/0/4          Up          Cascade
xe-2/0/5          Up          Cascade
xe-2/0/6          Up          Cascade
xe-2/0/7          Up          Cascade
xe-2/1/0          Up          Cascade
xe-2/1/1          Up          Cascade
xe-2/1/2          Up          Cascade
xe-2/1/3          Up          Cascade
xe-2/1/4          Up          Cascade
xe-2/1/5          Up          Cascade
xe-2/1/6          Up          Cascade
xe-2/1/7          Up          Cascade
xe-2/2/0          Up          Cascade
xe-2/2/1          Up          Cascade
xe-2/2/2          Up          Cascade
xe-2/2/3          Up          Cascade
xe-2/2/4          Up          Cascade
xe-2/2/5          Up          Cascade
xe-2/2/6          Up          Cascade
xe-2/2/7          Up          Cascade
```

```
xe-2/3/0          Up          Cascade

xe-2/3/3          Dn          Cascade

xe-2/3/4          Up          Cascade

xe-2/3/5          Up          Cascade

xe-2/3/6          Up          Cascade

xe-2/3/7          Up          Cascade
```

Meaning The output shows:

- Whether the recognized port is up or down, using the **State** column output. The **State** column output is **Up** when the interface is up and **Dn** when the interface is down.

Verifying That a Cascade Port Recognizes a Satellite Device

Purpose Verify that a cascade port on an aggregation device recognizes a satellite device in the Junos Fusion. This procedure also provides a method of verifying the hardware and software information for each satellite device in the Junos Fusion.

Action Enter the **show chassis satellite neighbor** command:

```
user@aggregation-device> show chassis satellite neighbor
Interface   State      Port Info   System Name  Model           SW Version
xe-2/3/7    Init
xe-2/3/6    Init
xe-2/3/5    Init
xe-2/3/4    Init
xe-2/3/3    Dn
xe-2/3/0    Two-Way    xe-0/2/2        ex4300-29 EX4300-48T     0.1I20150224_182
7_dc-builder
xe-2/2/7    Two-Way    xe-0/2/2        ex4300-28 EX4300-48T     0.1I20150224_182
7_dc-builder
xe-2/2/6    Two-Way    xe-0/2/2        ex4300-27 EX4300-48T     0.1I20150224_182
7_dc-builder
xe-2/2/5    Two-Way    xe-0/2/2        ex4300-26 EX4300-48T     0.1I20150224_182
7_dc-builder
xe-2/2/4    Init
xe-2/2/3    Init
xe-2/2/2    Two-Way    xe-0/0/48:3 qfx5100-48s-06 QFX5100-48S-6Q 0.1I20150224_18
27_dc-builder
xe-2/2/1    Two-Way    xe-0/0/48:3 qfx5100-48s-05 QFX5100-48S-6Q 0.1I20150224_18
27_dc-builder
xe-2/2/0    Init
xe-2/1/7    Init
xe-2/1/6    Init
xe-2/1/5    Two-Way    xe-0/0/4:2  qfx5100-24q-09 QFX5100-24Q-2P 0.1I20150224_18
27_dc-builder
xe-2/1/4    Two-Way    xe-0/2/1        ex4300-31 EX4300-48T     0.1I20150224_182
7_dc-builder
xe-2/1/3    Two-Way    xe-0/2/1        ex4300-30 EX4300-48T     0.1I20150224_182
7_dc-builder
```

```
xe-2/1/2    Two-Way    xe-0/2/1        ex4300-29 EX4300-48T     0.1I20150224_182
7_dc-builder
xe-2/1/1    Two-Way    xe-0/2/1        ex4300-28 EX4300-48T     0.1I20150224_182
7_dc-builder
xe-2/1/0    Init
xe-2/0/7    Two-Way    xe-0/2/1        ex4300-26 EX4300-48T     0.1I20150224_182
7_dc-builder
xe-2/0/6    Init
xe-2/0/5    Init
xe-2/0/4    Init
xe-2/0/3    Init
xe-2/0/2    Two-Way    xe-0/0/48:2 qfx5100-48s-04 QFX5100-48S-6Q 0.1I20150224_18
27_dc-builder
xe-2/0/1    Two-Way    xe-0/0/48:2 qfx5100-48s-03 QFX5100-48S-6Q 0.1I20150224_18
27_dc-builder
xe-2/0/0    Init
xe-1/2/3    Two-Way    xe-0/0/0:0  qfx5100-24q-09 QFX5100-24Q-2P 0.1I20150224_18
27_dc-builder
xe-1/2/2    Two-Way    xe-0/2/0        ex4300-31 EX4300-48T     0.1I20150224_182
7_dc-builder
xe-1/2/1    Two-Way    xe-0/2/0        ex4300-30 EX4300-48T     0.1I20150224_182
7_dc-builder
xe-1/0/3    Two-Way    xe-0/2/0        ex4300-29 EX4300-48T     0.1I20150224_182
7_dc-builder
xe-1/0/2    Two-Way    xe-0/2/0        ex4300-28 EX4300-48T     0.1I20150224_182
7_dc-builder
xe-1/0/1    Two-Way    xe-0/2/0        ex4300-27 EX4300-48T     0.1I20150224_182
7_dc-builder
xe-0/2/7    Two-Way    xe-0/0/0:1  qfx5100-24q-09 QFX5100-24Q-2P 0.1I20150224_18
27_dc-builder
xe-0/2/6    Init
xe-0/2/5    Init
xe-0/2/4    Two-Way    xe-0/0/48:1 qfx5100-48s-05 QFX5100-48S-6Q 0.1I20150224_18
27_dc-builder
xe-0/2/3    Two-Way    xe-0/0/48:1 qfx5100-48s-04 QFX5100-48S-6Q 0.1I20150224_18
27_dc-builder
xe-0/2/2    Two-Way    xe-0/0/48:1 qfx5100-48s-03 QFX5100-48S-6Q 0.1I20150224_18
27_dc-builder
xe-0/2/1    Init
xe-0/2/0    Init
xe-0/0/9    Two-Way    xe-0/2/0        ex4300-26 EX4300-48T     0.1I20150224_182
7_dc-builder
xe-0/0/8    Two-Way    xe-0/2/0        ex4300-25 EX4300-48T     0.1I20150224_182
7_dc-builder
xe-0/0/7    Two-Way    xe-0/0/48:0 qfx5100-48s-07 QFX5100-48S-6Q 0.1I20150224_18
27_dc-builder
xe-0/0/6    Two-Way    xe-0/0/48:0 qfx5100-48s-06 QFX5100-48S-6Q 0.1I20150224_18
27_dc-builder
xe-0/0/5    Two-Way    xe-0/0/48:0 qfx5100-48s-05 QFX5100-48S-6Q 0.1I20150224_18
27_dc-builder
xe-0/0/4    Two-Way    xe-0/0/48:0 qfx5100-48s-04 QFX5100-48S-6Q 0.1I20150224_18
27_dc-builder
xe-0/0/3    Two-Way    xe-0/0/48:0 qfx5100-48s-03 QFX5100-48S-6Q 0.1I20150224_18
27_dc-builder
xe-0/0/2    Two-Way    xe-0/0/48:0 qfx5100-48s-02 QFX5100-48S-6Q 0.1I20150224_18
27_dc-builder
xe-0/0/1    Init
```

Meaning The output confirms:

- The cascade ports on the aggregation device that are recognized by the Junos Fusion. All recognized cascade port interfaces are listed in the **Interface** output.
- The uplink ports on the satellite devices that are connected to the cascade ports. The cascade port on each satellite device is identified in the **Port Info** column, and the satellite device itself is identified in the **System Name** output.
- Whether the cascade port to uplink port connection has initialized, using the **State** output. The **State** output is **Two-Way** when the satellite device is properly initialized, and traffic can be passed between the aggregation device and the satellite device over the link.
- The hardware model of each satellite device in the **Model** column, and the satellite software running on each satellite device in the **SW Version** output.

Verifying Extended Port Operation

Purpose Verify that a specific extended port is recognized by the aggregation device, and is operational.

Action Enter the **show chassis satellite extended-port** command on the aggregation device:

```
user@aggregation-device> show chassis satellite extended-port
Legend for interface types:
   * -- Uplink interface
                              Rx            Tx            Admin/Op IFD
Name           State          Request State Request State State    Idx   PCID
et-100/0/2     AddComplete    None          Ready         Up/Dn    838   110
et-104/0/2     AddComplete    None          Ready         Up/Dn    813   110
et-107/0/23    AddComplete    None          Ready         Up/Up    544   194
ge-109/0/0     AddComplete    None          Ready         Up/Up    402   115
ge-109/0/1     AddComplete    None          Ready         Up/Dn    403   114
ge-109/0/10    AddComplete    None          Ready         Up/Dn    412   113
ge-109/0/11    AddComplete    None          Ready         Up/Dn    413   112
ge-109/0/12    AddComplete    None          Ready         Up/Dn    414   123
ge-109/0/13    AddComplete    None          Ready         Up/Dn    415   122
ge-109/0/14    AddComplete    None          Ready         Up/Dn    416   125
ge-109/0/15    AddComplete    None          Ready         Up/Dn    417   124
ge-109/0/16    AddComplete    None          Ready         Up/Dn    418   131
ge-109/0/17    AddComplete    None          Ready         Up/Dn    419   130
ge-109/0/18    AddComplete    None          Ready         Up/Dn    420   133
ge-109/0/19    AddComplete    None          Ready         Up/Dn    421   132
ge-109/0/2     AddComplete    None          Ready         Up/Dn    404   117
ge-109/0/20    AddComplete    None          Ready         Up/Dn    422   127
ge-109/0/21    AddComplete    None          Ready         Up/Dn    423   126
ge-109/0/22    AddComplete    None          Ready         Up/Dn    424   129
ge-109/0/23    AddComplete    None          Ready         Up/Dn    425   128
ge-109/0/24    AddComplete    None          Ready         Up/Dn    426   103
ge-109/0/25    AddComplete    None          Ready         Up/Dn    427   102
ge-109/0/26    AddComplete    None          Ready         Up/Dn    428   105
ge-109/0/27    AddComplete    None          Ready         Up/Dn    429   104
ge-109/0/28    AddComplete    None          Ready         Up/Dn    430   107
ge-109/0/29    AddComplete    None          Ready         Up/Dn    431   106
ge-109/0/3     AddComplete    None          Ready         Up/Dn    405   116
ge-109/0/30    AddComplete    None          Ready         Up/Dn    432   109
ge-109/0/31    AddComplete    None          Ready         Up/Dn    433   108
```

```
ge-109/0/32     AddComplete     None            Ready           Up/Dn     434    135
ge-109/0/33     AddComplete     None            Ready           Up/Dn     435    134
ge-109/0/34     AddComplete     None            Ready           Up/Dn     436    137
ge-109/0/35     AddComplete     None            Ready           Up/Dn     437    136
ge-109/0/36     AddComplete     None            Ready           Up/Dn     438    144
ge-109/0/37     AddComplete     None            Ready           Up/Dn     439    143
ge-109/0/38     AddComplete     None            Ready           Up/Dn     440    146
ge-109/0/39     AddComplete     None            Ready           Up/Dn     441    145
ge-109/0/4      AddComplete     None            Ready           Up/Dn     406    119
ge-109/0/40     AddComplete     None            Ready           Up/Dn     442    140
ge-109/0/41     AddComplete     None            Ready           Up/Dn     443    139
ge-109/0/42     AddComplete     None            Ready           Up/Dn     444    142
ge-109/0/43     AddComplete     None            Ready           Up/Dn     445    141
ge-109/0/44     AddComplete     None            Ready           Up/Dn     446    148
ge-109/0/45     AddComplete     None            Ready           Up/Dn     447    147
ge-109/0/46     AddComplete     None            Ready           Up/Dn     448    150
ge-109/0/47     AddComplete     None            Ready           Up/Dn     449    149
ge-109/0/5      AddComplete     None            Ready           Up/Dn     407    118
ge-109/0/6      AddComplete     None            Ready           Up/Dn     408    121
ge-109/0/7      AddComplete     None            Ready           Up/Dn     409    120
ge-109/0/8      AddComplete     None            Ready           Up/Dn     410    111
ge-109/0/9      AddComplete     None            Ready           Up/Dn     411    110
ge-110/0/0      AddComplete     None            Ready           Up/Up     728    115
ge-110/0/1      AddComplete     None            Ready           Up/Dn     729    114
```

Meaning The output confirms:

- That an extended port is recognized by the aggregation device. All extended ports are listed in the **Name** column of the output.
- That the listed extended ports have been added to the Junos Fusion, as shown by the **AddComplete** output in the **State** column.
- The administrative and operational state of each extended port. An extended port is operating correctly when the **Admin State** and **Op State** outputs are both in the **Up** state.

Verifying the Satellite Software Version

Purpose Verify the satellite software versions available on the aggregation device in a Junos Fusion.

Action Enter the **show chassis satellite software** command on the aggregation device.

```
user@aggregation-device> show chassis satellite software
Version                         Platforms           Group
3.0R1.1                          i386 ppc            group1
                                                    group2
                                                    group3
                                                    group4
                                                    group5
3.0R1.0                          i386 ppc
```


For more detailed output, you can also enter the **show chassis satellite software detail** on the aggregation device.

```
Software package version: 3.0R1.6
Platforms supported by package: i386 ppc arm arm563xx
  Platform      Host Version  Models Supported
  i386          3.0.3         QFX5100-24Q-2P
                              QFX5100-48C-6Q
                              QFX5100-48S-6Q
                              QFX5100-48T-6Q
                              QFX5100-96S-8Q
                              QFX5100-48SH-6Q
                              QFX5100-48TH-6Q
  ppc           1.1.2         EX4300-24P
                              EX4300-24T
                              EX4300-48P
                              EX4300-48T
                              EX4300-48T-BF
                              EX4300-48T-DC
                              EX4300-48T-DC-BF
  arm           1.0.0         EX2300-24P
                              EX2300-24T-DC
                              EX2300-C-12T
                              EX4300-C-12P
  arm563xx      1.0.0         EX3400-24P
                              EX3400-24T
                              EX3400-48T
                              EX3400-48P
Current Groups: group1
                group2
                group3
                group4
                group5
```

Meaning The version of satellite software installed is displayed in the **Version** or **Software package version** column, and the satellite software upgrade group associated with each version of satellite software is listed in the **Group** or **Current Groups** output.

Verifying the Devices and Software Used in a Satellite Software Upgrade Group

Purpose Verify the satellite software upgrade groups in the Junos Fusion, and which satellite devices are part of which satellite software upgrade groups.

A satellite software upgrade group can be a user configured group or the name of a satellite device cluster.

Action Enter the **show chassis satellite upgrade-group** command on the aggregation device.

show chassis satellite upgrade-group

```
user@aggregation-device> show chassis satellite upgrade-group
                                                Group              Device
Group         Sw-Version                        State      Slot    State
__ungrouped__
group1        3.0R1.1                           in-sync    107     version-in-sync
```

```
                                                                108     version-in-sync

                                                                109     version-in-sync

                                                                110     version-in-sync

                                                                111     version-in-sync

                                                                112     version-in-sync

                                                                113     version-in-sync
group2        3.0R1.1                        in-sync            102     version-in-sync

                                                                103     version-in-sync

                                                                104     version-in-sync

                                                                105     version-in-sync

                                                                106     version-in-sync

                                                                114     version-in-sync
```

Meaning The output shows that two satellite software upgrade groups—**ex4300** and **qfx**—have been created, and that both are using satellite software version 1.0R1.1. The **Group Slot** output shows which satellite devices—listed by FPC slot ID number—are in which software group, and the **Device State** output showing **version-in-sync** confirms that the satellite devices are running the satellite software that is associated with the satellite software upgrade group.

Related Documentation

- *Configuring Junos Fusion Provider Edge*
- *Configuring or Expanding a Junos Fusion Enterprise*

Verifying EVPN Operations in a Junos Fusion Data Center

This topic enables you to verify the following basic operations in a Junos Fusion Data Center with EVPN:

- Verifying EVPN Connectivity on page 122
- Verifying that EVPN Routes Are Being Learned on page 124
- Verifying that Hosts and Servers Are Reachable on page 127

Verifying EVPN Connectivity

Purpose Verify that EVPN is properly configured and provides connectivity with the other aggregation devices in a Junos Fusion Data Center.

Action Enter the **show evpn instance extensive** command on each of the aggregation devices.

```
user@ad1>  show evpn instance extensive
...
Instance: default-switch
  Route Distinguisher: 192.168.1.11:1
  Encapsulation type: VXLAN
  Duplicate MAC detection threshold: 5
  Duplicate MAC detection window: 180
  MAC database status                     Local  Remote
    MAC advertisements:                      12      61
    MAC+IP advertisements:                   20      39
    Default gateway MAC advertisements:      18      27
  Number of local interfaces: 3 (3 up)
    Interface name  ESI                            Mode             Status     A

    .local..4       00:00:00:00:00:00:00:00:00:00  single-homed     Up         R

    ae0.0           05:00:64:00:00:00:00:00:00:00  all-active       Up
Root
    ae11.0          05:00:64:00:0b:00:00:00:00:0b  all-active       Up
Root
  Number of IRB interfaces: 9 (9 up)
    Interface name  VLAN   VNI    Status  L3 context
    irb.100                100     Up     TENANT1
    irb.101                101     Up     TENANT1
    irb.102                102     Up     TENANT2
    irb.103                103     Up     TENANT2
    irb.3001               3001    Up     TENANT1
    irb.3002               3002    Up     TENANT1
    irb.3003               3003    Up     TENANT2
    irb.3004               3004    Up     TENANT2
    irb.3005               3005    Up     TENANT1
  Number of protect interfaces: 0
  Number of bridge domains: 9
    VLAN  Domain ID   Intfs / up    IRB intf   Mode      MAC sync  IM route label
  IPv4 SG sync  IPv4 IM core nexthop  IPv6 SG sync  IPv6 IM core nexthop
    100   100            1    1     irb.100    Extended         Enabled   100
          Enabled   2097154           Disabled
    101   101            1    1     irb.101    Extended         Enabled   101
          Enabled   2097153           Disabled
    102   102            1    1     irb.102    Extended         Enabled   102
          Enabled   2097152           Disabled
...
     Number of neighbors: 3
    Address               MAC    MAC+IP        AD        IM        ES Leaf-label

    192.168.2.22           20        20         0         9         0
    192.168.3.33           21        18         0         9         0
    192.168.4.44           20        20         0         9         0
  Number of ethernet segments: 11
    ESI: 05:00:00:00:64:00:00:00:64:00
      Local interface: irb.100, Status: Up/Forwarding
      Number of remote PEs connected: 3
        Remote PE        MAC label  Aliasing label  Mode
        192.168.2.22     100        0               single-homed
        192.168.3.33     100        0               single-homed
        192.168.4.44     100        0               single-homed
    ESI: 05:00:00:00:64:00:00:00:65:00
      Local interface: irb.101, Status: Up/Forwarding
      Number of remote PEs connected: 3
```

```
        Remote PE        MAC label  Aliasing label  Mode
        192.168.2.22     101        0               single-homed
        192.168.3.33     101        0               single-homed
        192.168.4.44     101        0               single-homed
    ESI: 05:00:00:00:64:00:00:00:66:00
      Local interface: irb.102, Status: Up/Forwarding
      Number of remote PEs connected: 3
        Remote PE        MAC label  Aliasing label  Mode
        192.168.2.22     102        0               single-homed
        192.168.3.33     102        0               single-homed
        192.168.4.44     102        0               single-homed

...
```

Meaning The output shows:

- Configured EVPN entities—for example, interfaces, VLANs, and so on—are part of the default-switch routing instance. The output also confirms that the EVPN encapsulation type is VXLAN.
- The EVPN control plane is advertising MAC addresses.
- The three other aggregation devices in the EVPN core fabric are recognized as BGP neighbors.
- The EVPN Ethernet segments and interfaces are up and forwarding traffic.

Verifying that EVPN Routes Are Being Learned

Purpose Verify that EVPN is advertising and learning routes in the Junos Fusion Data Center topology.

Action Enter the **show route table bgp.evpn.0** command on each of the aggregation devices.

```
user@ad1> show route table bgp.evpn.0
bgp.evpn.0: 152 destinations, 152 routes (152 active, 0 holddown, 0 hidden)
+ = Active Route, - = Last Active, * = Both
...
```

EVPN type 2 (MAC with IP advertisement) routes

```
2:192.168.2.22:1::100::00:00:5e:00:01:01/304 MAC/IP
                   *[BGP/170] 1d 22:43:43, localpref 100, from 192.168.2.22
                      AS path: I, validation-state: unverified
                    > to 10.0.14.2 via et-0/0/50.0
2:192.168.2.22:1::100::00:31:46:e8:f9:d6/304 MAC/IP
                   *[BGP/170] 1d 22:43:43, localpref 100, from 192.168.2.22
                      AS path: I, validation-state: unverified
                    > to 10.0.14.2 via et-0/0/50.0
2:192.168.2.22:1::101::00:00:5e:00:01:01/304 MAC/IP
                   *[BGP/170] 1d 22:43:43, localpref 100, from 192.168.2.22
                      AS path: I, validation-state: unverified
                    > to 10.0.14.2 via et-0/0/50.0
2:192.168.2.22:1::101::00:31:46:e8:f9:d6/304 MAC/IP
                   *[BGP/170] 1d 22:43:43, localpref 100, from 192.168.2.22
```



```
                      AS path: I, validation-state: unverified
                    > to 10.0.14.2 via et-0/0/50.0
2:192.168.2.22:1::102::00:00:5e:00:01:01/304 MAC/IP
                   *[BGP/170] 1d 22:43:43, localpref 100, from 192.168.2.22
                      AS path: I, validation-state: unverified
                    > to 10.0.14.2 via et-0/0/50.0
2:192.168.2.22:1::102::00:31:46:e8:f9:d6/304 MAC/IP
                   *[BGP/170] 1d 22:43:43, localpref 100, from 192.168.2.22
                      AS path: I, validation-state: unverified
                    > to 10.0.14.2 via et-0/0/50.0
...
2:192.168.3.33:1::100::00:00:5e:00:01:01/304 MAC/IP
                   *[BGP/170] 1d 22:35:12, localpref 100, from 192.168.3.33
                      AS path: I, validation-state: unverified
                    > to 10.0.13.2 via et-0/0/16.0
2:192.168.3.33:1::100::7c:e2:ca:e4:05:9a/304 MAC/IP
                   *[BGP/170] 1d 22:35:12, localpref 100, from 192.168.3.33
                      AS path: I, validation-state: unverified
                    > to 10.0.13.2 via et-0/0/16.0
2:192.168.3.33:1::101::00:00:5e:00:01:01/304 MAC/IP
                   *[BGP/170] 1d 22:35:12, localpref 100, from 192.168.3.33
                      AS path: I, validation-state: unverified
                    > to 10.0.13.2 via et-0/0/16.0
2:192.168.3.33:1::101::7c:e2:ca:e4:05:9a/304 MAC/IP
                   *[BGP/170] 1d 22:35:12, localpref 100, from 192.168.3.33
                      AS path: I, validation-state: unverified
                    > to 10.0.13.2 via et-0/0/16.0
2:192.168.3.33:1::102::00:00:5e:00:01:01/304 MAC/IP
                   *[BGP/170] 1d 22:35:12, localpref 100, from 192.168.3.33
                      AS path: I, validation-state: unverified
                    > to 10.0.13.2 via et-0/0/16.0
2:192.168.3.33:1::102::7c:e2:ca:e4:05:9a/304 MAC/IP
                   *[BGP/170] 1d 22:35:12, localpref 100, from 192.168.3.33
                      AS path: I, validation-state: unverified
                    > to 10.0.13.2 via et-0/0/16.0
...
2:192.168.4.44:1::100::00:00:5e:00:01:01/304 MAC/IP
                   *[BGP/170] 1d 22:33:16, localpref 100, from 192.168.4.44
                      AS path: I, validation-state: unverified
                    > to 10.0.12.2 via et-0/0/17.0
2:192.168.4.44:1::100::7c:e2:ca:e2:75:7c/304 MAC/IP
                   *[BGP/170] 1d 22:33:16, localpref 100, from 192.168.4.44
                      AS path: I, validation-state: unverified
                    > to 10.0.12.2 via et-0/0/17.0
2:192.168.4.44:1::101::00:00:5e:00:01:01/304 MAC/IP
                   *[BGP/170] 1d 22:33:16, localpref 100, from 192.168.4.44
                      AS path: I, validation-state: unverified
                    > to 10.0.12.2 via et-0/0/17.0
2:192.168.4.44:1::101::7c:e2:ca:e2:75:7c/304 MAC/IP
                   *[BGP/170] 1d 22:33:16, localpref 100, from 192.168.4.44
                      AS path: I, validation-state: unverified
                    > to 10.0.12.2 via et-0/0/17.0
2:192.168.4.44:1::102::00:00:5e:00:01:01/304 MAC/IP
                   *[BGP/170] 1d 22:33:16, localpref 100, from 192.168.4.44
                      AS path: I, validation-state: unverified
                    > to 10.0.12.2 via et-0/0/17.0
2:192.168.4.44:1::102::7c:e2:ca:e2:75:7c/304 MAC/IP
                   *[BGP/170] 1d 22:33:16, localpref 100, from 192.168.4.44
                      AS path: I, validation-state: unverified
                    > to 10.0.12.2 via et-0/0/17.0
2:192.168.4.44:1::103::00:00:5e:00:01:01/304 MAC/IP
```

```
                    *[BGP/170] 1d 22:33:16, localpref 100, from 192.168.4.44
                       AS path: I, validation-state: unverified
                     > to 10.0.12.2 via et-0/0/17.0
2:192.168.4.44:1::103::7c:e2:ca:e2:75:7c/304 MAC/IP
                    *[BGP/170] 1d 22:33:16, localpref 100, from 192.168.4.44
                       AS path: I, validation-state: unverified
                     > to 10.0.12.2 via et-0/0/17.0
...
```

EVPN type 3 (inclusive multicast) routes

```
...
3:192.168.2.22:1::100::192.168.2.22/248 IM
                    *[BGP/170] 3d 05:10:39, localpref 100, from 192.168.2.22
                       AS path: I, validation-state: unverified
                     > to 10.0.14.2 via et-0/0/50.0
3:192.168.2.22:1::101::192.168.2.22/248 IM
                    *[BGP/170] 3d 05:10:39, localpref 100, from 192.168.2.22
                       AS path: I, validation-state: unverified
                     > to 10.0.14.2 via et-0/0/50.0
3:192.168.2.22:1::102::192.168.2.22/248 IM
                    *[BGP/170] 3d 05:10:39, localpref 100, from 192.168.2.22
                       AS path: I, validation-state: unverified
                     > to 10.0.14.2 via et-0/0/50.0
...
3:192.168.3.33:1::100::192.168.3.33/248 IM
                    *[BGP/170] 3d 05:02:09, localpref 100, from 192.168.3.33
                       AS path: I, validation-state: unverified
                     > to 10.0.13.2 via et-0/0/16.0
3:192.168.3.33:1::101::192.168.3.33/248 IM
                    *[BGP/170] 3d 05:02:09, localpref 100, from 192.168.3.33
                       AS path: I, validation-state: unverified
                     > to 10.0.13.2 via et-0/0/16.0
3:192.168.3.33:1::102::192.168.3.33/248 IM
                    *[BGP/170] 3d 05:02:09, localpref 100, from 192.168.3.33
                       AS path: I, validation-state: unverified
                     > to 10.0.13.2 via et-0/0/16.0

...
3:192.168.4.44:1::100::192.168.4.44/248 IM
                    *[BGP/170] 3d 05:00:11, localpref 100, from 192.168.4.44
                       AS path: I, validation-state: unverified
                     > to 10.0.12.2 via et-0/0/17.0
3:192.168.4.44:1::101::192.168.4.44/248 IM
                    *[BGP/170] 3d 05:00:11, localpref 100, from 192.168.4.44
                       AS path: I, validation-state: unverified
                     > to 10.0.12.2 via et-0/0/17.0
3:192.168.4.44:1::102::192.168.4.44/248 IM
                    *[BGP/170] 3d 05:00:11, localpref 100, from 192.168.4.44
                       AS path: I, validation-state: unverified
                     > to 10.0.12.2 via et-0/0/17.0
```

EVPN type 4 (Ethernet segment) routes

```
4:192.168.2.22:0::05006400000000000000:192.168.2.22/296 ES
                    *[BGP/170] 3d 04:41:27, localpref 100, from 192.168.2.22
                       AS path: I, validation-state: unverified
                     > to 10.0.14.2 via et-0/0/50.0
4:192.168.2.22:0::050064000b000000000b:192.168.2.22/296 ES
                    *[BGP/170] 3d 05:00:10, localpref 100, from 192.168.2.22
```



```
                      AS path: I, validation-state: unverified
                    > to 10.0.14.2 via et-0/0/50.0
4:192.168.3.33:0::05006400000000000000:192.168.3.33/296 ES
                   *[BGP/170] 3d 04:41:27, localpref 100, from 192.168.3.33
                      AS path: I, validation-state: unverified
                    > to 10.0.13.2 via et-0/0/16.0
4:192.168.3.33:0::050064000b000000000b:192.168.3.33/296 ES
                   *[BGP/170] 3d 05:00:10, localpref 100, from 192.168.3.33
                      AS path: I, validation-state: unverified
                    > to 10.0.13.2 via et-0/0/16.0
4:192.168.4.44:0::05006400000000000000:192.168.4.44/296 ES
                   *[BGP/170] 3d 04:41:27, localpref 100, from 192.168.4.44
                      AS path: I, validation-state: unverified
                    > to 10.0.12.2 via et-0/0/17.0
4:192.168.4.44:0::050064000b000000000b:192.168.4.44/296 ES
                   *[BGP/170] 3d 05:00:10, localpref 100, from 192.168.4.44
                      AS path: I, validation-state: unverified
                    > to 10.0.12.2 via et-0/0/17.0
```

Meaning The output confirms that the aggregation device has learned EVPN routes from the other aggregation devices in the EVPN core fabric.

NOTE: For the sake of brevity, the sample output shows EVPN type 2, 3, and 4 routes only. It does not show all possible EVPN routes types.

Verifying that Hosts and Servers Are Reachable

Purpose Verify that EVPN has learned about hosts and servers in the Junos Fusion Data Center.

Action Enter the show ethernet-switching table command on each of the aggregation devices.

```
user@ad1> show ethernet-switching table
MAC flags (S - static MAC, D - dynamic MAC, L - locally learned, P - Persistent
static
           SE - statistics enabled, NM - non configured MAC, R - remote PE MAC,
O - ovsdb MAC)

Ethernet switching table : 30 entries, 30 learned
Routing instance : default-switch
   Vlan                MAC                 MAC      Logical                Active

   name                address             flags    interface              source

   v100                00:31:46:e8:f9:d6   D        vtep.32768
192.168.2.22
   v100                7c:e2:ca:e2:75:7c   D        vtep.32771
192.168.4.44
   v100                7c:e2:ca:e4:05:9a   D        vtep.32770
192.168.3.33
   v101                00:31:46:e8:f9:d6   D        vtep.32768
192.168.2.22
   v101                7c:e2:ca:e2:75:7c   D        vtep.32771
```

```
192.168.4.44
   v101                7c:e2:ca:e4:05:9a   D        vtep.32770
192.168.3.33
   v102                00:31:46:e8:f9:d6   D        vtep.32768
192.168.2.22
   v102                7c:e2:ca:e2:75:7c   D        vtep.32771
192.168.4.44
   v102                7c:e2:ca:e4:05:9a   D        vtep.32770
192.168.3.33
...
```

Meaning The MAC table for the default-switch routing instance—also known as the EVPN instance—includes the MAC addresses of the hosts and servers in the topology. The table also maps each MAC address to the remote aggregation device on which the address was learned, and therefore, can be reached.

Related Documentation

- Understanding EVPN in a Junos Fusion Data Center on page 26
- Configuring or Expanding a Junos Fusion Data Center on page 47

Converting a Satellite Device in a Junos Fusion to a Standalone Device

In the event that you need to convert a satellite device to a standalone device, you will need to download and install a new Junos OS software package on the satellite device. The satellite device stops participating in the Junos Fusion topology once the software installation starts.

The following steps explain how to convert a satellite device that is participating in a Junos Fusion to a standalone device running Junos OS. If you have a standalone switch that is not part of a Junos Fusion but is running satellite software, and you want the switch to run Junos OS software, see "Installing Junos OS Software on a Standalone Device Running Satellite Software" on page 132.

NOTE: The QFX5100-48SH and QFX5100-48TH switch models are shipped from the factory with satellite device software. You cannot convert these switches to become standalone devices.

Conversion of EX2300 and EX3400 switches from satellite devices to standalone devices cannot be initiated from the aggregation device. To install Junos OS software on an EX2300 or EX3400 switch acting as a satellite device, see "Installing Junos OS Software on a Standalone Device Running Satellite Software" on page 132.

- Download Junos OS Software on page 129
- Disable the Automatic Conversion Configuration on page 130
- Install Junos OS Software on the Satellite Device on page 131

Download Junos OS Software

Before you install a new Junos OS software package on a satellite device, make sure you download the correct software package for that device:

- If the satellite device is a QFX5110, QFX5200 or EX4300 switch, you install a standard, signed **jinstall** version of Junos OS.
- If the satellite device is a QFX5100 switch that can be converted to a standalone device, you must install a Preboot eXecution Environment (PXE) version of Junos OS. The PXE version of Junos OS software supports the same feature set as the other Junos OS software packages for a release, but is specially engineered to install Junos OS onto a device running satellite software. The PXE Junos OS package name uses the format **install-media-pxe-qfx-5-*version*-domestic.tgz**.
- For Junos Fusion systems running Junos OS Release 17.2R1 and later, if the satellite device is a QFX5100 switch that can be converted to a standalone device, you must install a signed PXE version of Junos OS to convert the satellite device running satellite software to a standalone device running Junos OS software. The signed PXE Junos OS package name uses the format **install-media-pxe-qfx-5-*version*-domestic-signed.tgz**.

To download the version of Junos OS that you want to run on the satellite device after removing it from the Junos Fusion:

1. Using a Web browser, navigate to the Junos OS software download URL on the Juniper Networks webpage:

   https://www.juniper.net/support/downloads

2. Log in to the Juniper Networks authentication system using the username (generally your e-mail address) and password supplied by Juniper Networks representatives.

3. Select **By Technology > Junos Platform > Junos Fusion** from the drop-down list and select the switch platform series and model for your satellite device.

4. Select the version of Junos OS that you want to run on the satellite device after removing it from the Junos Fusion.

5. Review and accept the End User License Agreement.

6. Download the software to a local host.

7. Copy the software to the routing platform or to your internal software distribution site.

Disable the Automatic Conversion Configuration

Before removing a satellite device from an operational Junos Fusion, you must disable the configuration for automatic satellite conversion. If automatic satellite conversion is enabled for the FPC slot ID, the Junos OS installation cannot proceed.

For example, the following installation on an EX4300 satellite device is blocked:

```
[edit]
user@aggregation-device> request chassis satellite install fpc-slot 103
/var/tmp/jinstall-ex-4300-14.1X53-D43.7-domestic-signed.tgz
Convert satellite device to Junos standalone device? [yes,no] (no) yes

Verified jinstall-ex-4300-14.1X53-D43.7-domestic.tgz signed by
PackageProductionEc_2017 method ECDSA256+SHA256
Satellite 103 is configured in the auto-satellite-conversion list
Please remove it from the list before converting to standalone
```

You can check the automatic satellite conversion configuration by entering the **show** statement at the [**edit chassis satellite-management auto-satellite-conversion**] hierarchy level.

1. If automatic satellite conversion is enabled for the satellite device's FPC slot ID, remove the FPC slot ID from the automatic satellite conversion configuration.

   ```
   [edit]
   user@aggregation-device# delete chassis satellite-management auto-satellite-conversion
   satellite slot-id
   ```

   For example, to remove FPC slot ID 103 from the Junos Fusion.

   ```
   [edit]
   user@aggregation-device# delete chassis satellite-management auto-satellite-conversion
   satellite 103
   ```

2. Commit the configuration.

   - To commit the configuration to a single Routing Engine only:

     ```
     [edit]
     user@aggregation-device# commit
     ```

   - To commit the configuration to all Routing Engines in multiple-aggregation device topology:

     ```
     [edit]
     user@aggregation-device# commit synchronize
     ```

Install Junos OS Software on the Satellite Device

1. To install the Junos OS software on the satellite device to convert the device to a standalone device, use the following CLI command:

   ```
   [edit]
   user@aggregation-device> request chassis satellite install fpc-slot slot-id
   URL-to-software-package
   ```

   For example, to install a software package stored in the **var/tmp** folder on the aggregation device onto an EX4300 switch acting as the satellite device using FPC slot 103:

   ```
   [edit]
   user@aggregation-device> request chassis satellite install fpc-slot 103
   /var/tmp/jinstall-ex-4300-14.1X53-D43.7-domestic-signed.tgz
   Convert satellite device to Junos standalone device? [yes,no] (no) yes

   Verified jinstall-ex-4300-14.1X53-D43.7-domestic.tgz signed by
   PackageProductionEc_2017 method ECDSA256+SHA256
   Initiating Junos standalone conversion on device 103...
   Response from device: Conversion started
   ```

   NOTE: If you are converting a QFX5100 switch and the Junos Fusion is running a Junos OS release earlier than 17.2R1, you must install the unsigned PXE software package on the QFX5100 switch:

   ```
   [edit]
   user@aggregation-device> request chassis satellite install fpc-slot 103
   /var/tmp/install-media-pxe-qfx-5-14.1X53-D43.7-domestic.tgz
   ```

   The satellite device stops participating in the Junos Fusion topology once the software installation starts. The software upgrade starts after this command is entered.

2. To check the progress of the conversion, issue the **show chassis satellite fpc-slot** command:

   ```
   [edit]
   user@aggregation-device> show chassis satellite fpc-slot 103 extensive
                           Device          Cascade      Port       Extended
   Alias            Slot   State           Ports        State      Ports
   ex4300-24t-16    103    Online          xe-1/0/3     online     52/29
       xe-2/0/3     online

   When                 Event                          Action
   Nov 30 15:48:22.914  Rx SW-Update JSON-RPC response Conversion started
   Nov 30 15:47:54.375  Start-SW-Update                Junos conversion
   ```

3. Wait for the reboot that accompanies the software installation to complete.

4. When you are prompted to log back into your device, uncable the device from the Junos Fusion topology. See *Removing a Transceiver*. Your device has been removed from Junos Fusion.

NOTE: **The device uses a factory-default configuration after the Junos OS installation is complete.**

Release History Table

Release	Description
17.2R1	For Junos Fusion systems running Junos OS Release 17.2R1 and later, if the satellite device is a QFX5100 switch that can be converted to a standalone device, you must install a signed PXE version of Junos OS to convert the satellite device running satellite software to a standalone device running Junos OS software.

Related Documentation

- *Understanding Software in a Junos Fusion Provider Edge*
- *Understanding Software in a Junos Fusion Enterprise*
- Understanding Software in a Junos Fusion Data Center on page 17

Installing Junos OS Software on a Standalone Device Running Satellite Software

This process should be used when you have a standalone switch running satellite software and you want the switch to run Junos OS software. A standalone device is running satellite software for one of the following reasons:

- It was removed from a Junos Fusion without following the instructions in "Converting a Satellite Device in a Junos Fusion to a Standalone Device" on page 128, which include a Junos OS installation.
- Satellite software was installed on the device but the device was never provisioned into a Junos Fusion.

NOTE: **If you are removing a satellite device from a Junos Fusion, you must first make sure that automatic satellite conversion is disabled for the satellite device's FPC slot ID. See** **"Converting a Satellite Device in a Junos Fusion to a Standalone Device" on page 128**.

To install Junos OS onto a QFX5100, QFX5100 or QFX5200 switch running satellite software:

- Select a Junos OS image that meets the satellite software to Junos OS conversion requirements. See Junos Fusion Hardware and Software Compatibility Matrices for satellite software to Junos OS conversion requirements.

- Copy the Junos OS image onto a USB flash drive and use the USB flash drive to install the Junos OS. See Performing a Recovery Installation Using an Emergency Boot Device.

To install Junos OS onto an EX4300 switch running satellite software:

1. Log in to the console port of your switch.

2. Power off the switch, and power it back on.

3. While the switch is powering back on, enter the UBoot prompt (=>) by pressing Ctrl+C on your keyboard.

4. From the Uboot prompt, set the operating system environment mode on the switch to Junos. Save the configuration and reset the kernel:

   ```
   => setenv osmode junos
   => setenv snos_previous_boot 0
   => save
   => reset
   ```

   After the reset operation completes, the loader prompt (**loader>**) appears.

5. Install Junos OS using a USB flash drive from the loader prompt. See *Booting an EX Series Switch Using a Software Package Stored on a USB Flash Drive*.

To install Junos OS onto an EX2300 or EX3400 switch running satellite software:

- Log in to the satellite software (SNOS) on the switch to be converted back to Junos OS and use the following sequence of commands to install the Junos package:

```
#####################################
dd bs=512 count=1 if=/dev/zero of=/dev/sda
echo -e "o\nn\np\n1\n\n\nw" | fdisk /dev/sda
mkfs.vfat /dev/sda1
fw_setenv target_os
reboot
##################################
>>Get to the loader prompt
##################################
loader> install --format tftp://<tftp server>/<Junos package name>
```

Related Documentation

- *Understanding Junos Fusion Enterprise Software and Hardware Requirements*
- Junos Fusion Hardware and Software Compatibility Matrices
- Converting a Satellite Device in a Junos Fusion to a Standalone Device on page 128

CHAPTER 5

Junos Fusion Data Center Operational Commands

- show chassis satellite extended-port
- show chassis satellite interface
- show chassis satellite neighbor
- show chassis satellite redundancy-group
- show chassis satellite redundancy-group devices
- show chassis satellite software
- show chassis satellite statistics
- show chassis satellite unprovision
- show chassis satellite upgrade-group
- show chassis temperature-thresholds
- show ethernet-switching table
- show interfaces extensive satellite-device
- show interfaces satellite-device
- show interfaces statistics
- show interfaces terse satellite-device
- show system core-dumps

request chassis device-mode satellite

Syntax request chassis device-mode satellite *package-name*

Release Information Command introduced in Junos OS Release 14.1X53-D16.

Description Manually install satellite software onto a switch before interconnecting the switch as a satellite device into a Junos Fusion.

There are other methods of installing satellite software onto a satellite device, and each Junos Fusion has individual requirements for manually installing satellite software. See *Configuring Junos Fusion Provider Edge* or *Configuring or Expanding a Junos Fusion Enterprise* before manually installing satellite software.

This command is entered from a standalone device before it is configured into a satellite device in a Junos Fusion.

Options ***package-name***—The URL to the satellite software package.

Required Privilege Level system-control

Related Documentation
- *Configuring Junos Fusion Provider Edge*
- *Configuring or Expanding a Junos Fusion Enterprise*

List of Sample Output request chassis device-mode satellite /var/tmp/satellite-3.0R1.1-signed.tgz on page 137

Sample Output

request chassis device-mode satellite /var/tmp/satellite-3.0R1.1-signed.tgz

```
user@satellite-device> request chassis device-mode satellite
/var/tmp/satellite-3.0R1.1-signed.tgz
```

request chassis satellite disable

Syntax

request chassis satellite disable
<device-alias *alias-name*>
<fpc-slot *fpc-slot*>

Release Information

Command introduced in Junos OS Release 14.2R3 for Junos Fusion Provider Edge.
Command introduced in Junos OS Release 16.1R1 for Junos Fusion Enterprise.
Command introduced in Junos OS Release 17.2R1 for Junos Fusion Data Center.

Description

Disable the specified satellite device from the Junos Fusion.

When a satellite device is disabled from a Junos Fusion, all extended ports are immediately placed in the down state. The satellite device cannot send or receive traffic for the Junos Fusion until it is reenabled.

This command is useful whenever you need to disable a satellite device from a Junos Fusion, such as for troubleshooting scenarios. If you are removing a satellite device from a Junos Fusion to use the device elsewhere on the network, use the request chassis satellite install command to install Junos OS onto your satellite device before removing it from the Junos Fusion. See *Removing a Satellite Device from a Junos Fusion*.

You can reenable a satellite device that was disabled using this command using the request chassis satellite enable command.

Options

device-alias *alias-name*—Disable the satellite device with the specified alias name from the Junos Fusion.

fpc *fpc-slot*—Disable the satellite device with the specified FPC slot identifier from the Junos Fusion.

Required Privilege Level

system-control

Related Documentation

- *Configuring Junos Fusion Provider Edge*
- *Configuring or Expanding a Junos Fusion Enterprise*

List of Sample Output

request chassis satellite disable device-alias satellite-01 on page 138
request chassis satellite disable fpc-slot 101 on page 139

Sample Output

request chassis satellite disable device-alias satellite-01

```
user@aggregation-device> request chassis satellite disable device-alias satellite-01
```

Sample Output

request chassis satellite disable fpc-slot 101

```
user@aggregation-device> request chassis satellite disable fpc-slot 101
```

request chassis satellite enable

Syntax

request chassis satellite enable
<device-alias *alias-name*>
<fpc-slot *fpc-slot*>

Release Information

Command introduced in Junos OS Release 14.2R3 for Junos Fusion Provider Edge.
Command introduced in Junos OS Release 16.1R1 for Junos Fusion Enterprise.
Command introduced in Junos OS Release 17.2R1 for Junos Fusion Data Center.

Description

Enable the specified device as a satellite device in a Junos Fusion.

This command is typically not used in any standard Junos Fusion initial configuration procedure. This command is typically needed in cases where the satellite device or cascade port has been disabled and needs to be re-enabled.

Options

device-alias *alias-name*—Enable the satellite device with the specified alias name in the Junos Fusion.

fpc *fpc-slot*—Enable the device with the specified FPC slot ID as a satellite device in the Junos Fusion.

Required Privilege Level

system-control

Related Documentation

- *Configuring or Expanding a Junos Fusion Enterprise*
- *Configuring Junos Fusion Provider Edge*

List of Sample Output

request chassis satellite enable device-alias satellite-01 on page 140
request chassis satellite enable fpc-slot 101 on page 140

Sample Output

request chassis satellite enable device-alias satellite-01

```
user@aggregation-device> request chassis satellite enable device-alias satellite-01
```

Sample Output

request chassis satellite enable fpc-slot 101

```
user@aggregation-device> request chassis satellite enable fpc-slot 101
```

request chassis satellite file-copy

Syntax request chassis satellite file-copy [remote | local] <source-URL> <destination-URL>

Release Information Command introduced in Junos OS Release 14.2R3 for Junos Fusion Provider Edge.
Command introduced in Junos OS Release 16.1R1 for Junos Fusion Enterprise.
Command introduced in Junos OS Release 17.2R1 for Junos Fusion Data Center.

Description Copy a file between a satellite device and an aggregation device in a Junos Fusion.

Options **local**—Indicate that the file-copy from satellite-device has been initiated by a local user.

remote—Indicate that the file-copy from satellite-device has been initiated by a remote user.

source-URL—Specify the URL of the file that is copied.

If no device is specified as the *source-URL*, the file is copied from the aggregation device.

To specify a satellite device in the *source-URL*, enter **sd*slot-id-number*** at the beginning of the *source-URL*. For example, enter **sd101:/var/tmp/filename.txt** to specify that filename.txt in the /var/tmp directory on the satellite device using FPC slot ID number 101 is the *source-URL*.

destination-URL—Specify the destination URL where the file is copied into.

If no device is specified as the *destination-URL*, the file is copied into the aggregation device.

To specify a satellite device in the *destination-URL*, enter **sd*slot-id-number*** at the beginning of the *destination-URL*. For example, enter **sd101:/var/tmp/** to specify the /var/tmp directory on the satellite device using FPC slot ID number 101 as the *source-URL*.

Required Privilege Level system-control

Related Documentation
- *Configuring or Expanding a Junos Fusion Enterprise*
- *Configuring Junos Fusion Provider Edge*

List of Sample Output request chassis satellite file-copy on page 142

Sample Output

request chassis satellite file-copy

```
user@aggregation-device> request chassis satellite file-copy /var/tmp/file_name
sd101:/var/tmp/
```

request chassis satellite install

Syntax

request chassis satellite install *package-name*
[fpc-slot *fpc-slot* | device-alias *device-alias*]
<no-confirm>

Release Information

Command introduced in Junos OS Release 14.2R3 for Junos Fusion Provider Edge.
Command introduced in Junos OS Release 16.1R1 for Junos Fusion Enterprise.
Command introduced in Junos OS Release 17.2R1 for Junos Fusion Data Center.

Description

Install a version of Junos OS software onto a satellite device in a Junos Fusion.

Any device operating as a satellite device in a Junos Fusion is running satellite software. A device running satellite software cannot operate as a standalone network device until it is running a version of Junos OS software.

You would typically enter this command to install Junos OS onto a satellite device before removing the satellite device from a Junos Fusion. Installing the Junos OS software onto the satellite device before removing it from the Junos Fusion allows you to more easily install the device elsewhere in your network.

If you are using the automatic satellite conversion feature to convert devices into satellite devices in your Junos Fusion, remove the FPC slot ID to the satellite device from the automatic satellite conversion configuration before using this command to install the Junos OS software. You can update the automatic satellite conversion feature using the **set chassis** satellite-management auto-satellite-conversion satellite ***slot-id*** configuration statement.

You must install a PXE version of compatible Junos OS to convert the satellite device running satellite software to a standalone device running Junos OS software on QFX5100 switches acting as satellite devices. The PXE version of Junos OS is the software that includes **pxe** in the Junos OS package name when it is downloaded from the Software Center—for example, the PXE image for Junos OS Release 14.1X53-D16 is named **install-media-pxe-qfx-5-14.1X53-D16.2.tgz**.

For Junos Fusion systems running Junos OS Release 17.2R1 and later, you must install a signed PXE version of Junos OS to convert the satellite device running satellite software to a standalone device running Junos OS software. The signed PXE Junos OS package name uses the format **install-media-pxe-qfx-5-*version*-domestic-signed.tgz**.

The device uses a factory-default configuration after the Junos OS installation is complete. No Junos OS configuration is modified and the previous Junos OS configuration is not restored after the Junos OS software installation.

Options

package-name—Specify the URL to the Junos OS image to install onto the satellite device.

fpc *fpc-slot*—Install the Junos OS software onto the satellite device with the specified FPC slot ID in the Junos Fusion.

device-alias *device-alias*—Install the Junos OS software onto the satellite device with the alias name in the Junos Fusion.

no-confirm—(Optional) Install the Junos OS software onto the satellite device immediately without further confirmation prompting.

Required Privilege Level system-control

Related Documentation

- *Configuring or Expanding a Junos Fusion Enterprise*
- *Configuring Junos Fusion Provider Edge*

List of Sample Output

request chassis satellite install /var/tmp/jinstall-ex-4300-14.1X53-D16.1-domestic-signed.tgz fpc-slot 101 (EX4300 switch as satellite device) on page 144
request chassis satellite install /var/tmp/install-media-pxe-qfx-5-14.1X53-D16.2.tgz fpc-slot 102 (QFX5100 switch as satellite device) on page 144

Sample Output

request chassis satellite install /var/tmp/jinstall-ex-4300-14.1X53-D16.1-domestic-signed.tgz fpc-slot 101 (EX4300 switch as satellite device)

```
user@aggregation-device> request chassis satellite install
/var/tmp/jinstall-ex-4300-14.1X53-D16.1-domestic-signed.tgz fpc-slot 101
Response from device:
    Conversion Started
```

request chassis satellite install /var/tmp/install-media-pxe-qfx-5-14.1X53-D16.2.tgz fpc-slot 102 (QFX5100 switch as satellite device)

```
user@aggregation-device> request chassis satellite install
/var/tmp/install-media-pxe-qfx-5-14.1X53-D16.2.tgz fpc-slot 102
Response from device:
    Conversion Started
```

request chassis satellite interface

Syntax

request chassis satellite interface *interface-name*
device-mode satellite

Release Information

Command introduced in Junos OS Release 14.2R3 for Junos Fusion Provider Edge.
Command introduced in Junos OS Release 16.1R1 for Junos Fusion Enterprise.
Command introduced in Junos OS Release 17.2R1 for Junos Fusion Data Center.

Description

Change the device mode for a device.

This command is used to change a device into a satellite device for a Junos Fusion. After interconnecting a device to an aggregation device in a Junos Fusion, enter this command from the aggregation device to begin the manual satellite device conversion procedure.

Other configuration steps, such as configuring the cascade port and creating a satellite software upgrade group, must be completed before this command can be used to convert a device into a satellite device. See *Configuring Junos Fusion Provider Edge* or *Configuring or Expanding a Junos Fusion Enterprise*.

Options

interface-name—Specify the name of the cascade port interface on the aggregation device that connects to the device that will be converted into a satellite device.

Required Privilege Level

system-control

Related Documentation

- *Configuring Junos Fusion Provider Edge*
- *Configuring or Expanding a Junos Fusion Enterprise*

List of Sample Output

request chassis satellite interface xe-0/0/1 device-mode satellite on page 145

Sample Output

request chassis satellite interface xe-0/0/1 device-mode satellite

```
user@aggregation-device> request chassis satellite interface xe-0/0/1 device-mode satellite
```

request chassis satellite login

Syntax

request chassis satellite login
<fpc-slot *fpc-slot*>
<interface-name *interface-name*>

Release Information

Command introduced in Junos OS Release 14.2R3 for Junos Fusion Provider Edge.
Command introduced in Junos OS Release 16.1R1 for Junos Fusion Enterprise.
Command introduced in Junos OS Release 17.2R1 for Junos Fusion Data Center.

Description

Log in to the satellite device from the aggregation device.

This command is typically used to log in to the satellite device by expert users for debugging purposes. You can perform all configuration and administration tasks in a Junos Fusion from the aggregation device.

Options

fpc *fpc-slot*—Log in to the satellite device with the specified FPC slot ID.

interface-name *interface-name*—Log in to the satellite device connected to the specified interface. The *interface-name* is the cascade port on the aggregation device.

Required Privilege Level

system-control

Related Documentation

- *Configuring or Expanding a Junos Fusion Enterprise*
- *Configuring Junos Fusion Provider Edge*

List of Sample Output

request chassis satellite login fpc-slot 101 on page 146

Sample Output

request chassis satellite login fpc-slot 101

```
user@aggregation-device> request chassis satellite login fpc-slot 101
```

request chassis satellite reboot

Syntax

request chassis satellite reboot
<fpc-slot *fpc-slot*>
<range *range*>

Release Information

Command introduced in Junos OS Release 14.2R3 for Junos Fusion Provider Edge.
Command introduced in Junos OS Release 16.1R1 for Junos Fusion Enterprise.
Command introduced in Junos OS Release 17.2R1 for Junos Fusion Data Center.

Description

Reboot the satellite device or devices from the aggregation device in a Junos Fusion.

Options

fpc *fpc-slot*—Reboot the satellite device with the specified FPC slot identifier.

range *range*—Reboot all satellite devices in a range of FPC slot identifiers.

For instance, you can reboot the satellite devices using FPC slot identifiers 101, 102, and 103 by entering a *range* of **101-103**.

Required Privilege Level

system-control

Related Documentation

- *Configuring or Expanding a Junos Fusion Enterprise*
- *Configuring Junos Fusion Provider Edge*

List of Sample Output

request chassis satellite reboot fpc 101 on page 147
request chassis satellite reboot range 101-103 on page 147

Sample Output

request chassis satellite reboot fpc 101

```
user@aggregation-device> request chassis satellite reboot fpc 101
```

Sample Output

request chassis satellite reboot range 101-103

```
user@aggregation-device> request chassis satellite reboot range 101-103
```

request chassis satellite restart

Syntax

request chassis satellite restart
[fpc-slot *fpc-slot* | range *range*]
<*process-name*>

Release Information

Command introduced in Junos OS Release 14.2R3 for Junos Fusion Provider Edge.
Command introduced in Junos OS Release 16.1R1 for Junos Fusion Enterprise.
Command introduced in Junos OS Release 17.2R1 for Junos Fusion Data Center.

Description

Restart a process on a satellite device or devices from the aggregation device in a Junos Fusion.

You would typically restart a process in a Junos Fusion for troubleshooting or debugging purposes.

This command is intended for use by expert users for debugging purposes.

Options

fpc ***fpc-slot***—Restart the specified process on the satellite device in the specified FPC slot ID only.

range—Restart the process on the satellite devices in the specified range of FPC slot IDs only.

For instance, if you want to reboot the satellite devices using FPC slot IDs 101, 102, and 103, you can enter a *range* of **101-103**.

process-name—Restart the specified process on the specified FPC slot ID or range of FPC slot IDs.

Required Privilege Level

system-control

Related Documentation

- *Configuring or Expanding a Junos Fusion Enterprise*
- *Configuring Junos Fusion Provider Edge*

request chassis satellite shell-command

Syntax

request chassis satellite shell-command
[fpc-slot *fpc-slot* |*range*]
<*remote-command*>

Release Information

Command introduced in Junos OS Release 14.2R3 for Junos Fusion Provider Edge.
Command introduced in Junos OS Release 16.1R1 for Junos Fusion Enterprise.
Command introduced in Junos OS Release 17.2R1 for Junos Fusion Data Center.

Description

Run a UNIX shell command for a satellite device from the aggregation device in a Junos Fusion.

Options

fpc *fpc-slot*—Run the shell command on the satellite device using the specified FPC slot identifier only.

range—Run the shell command on the satellite devices in the specified range of FPC slot identifiers only.

For instance, you can run the shell command on the satellite devices in FPC slot identifiers 101, 102, and 103 by entering a *range* of **101-103**.

remote-command—Specify the UNIX shell command to run on the satellite device or devices.

Required Privilege Level

system-control

Related Documentation

- *Configuring or Expanding a Junos Fusion Enterprise*
- *Configuring Junos Fusion Provider Edge*

request system software add

List of Syntax

Syntax

request system software add *package-name*
<best-effort-load>
<delay-restart>
<device-alias *alias-name*>
<force>
<no-copy>
<no-validate>
<re0 | re1>
<reboot>
<satellite *slot-id*>
<set [*package-name1 package-name2*]>
<unlink>
<upgrade-group [all |*upgrade-group-name*]>
<upgrade-with-config>
<satellite *slot-id*>
<validate>
<version *version-string*>

Syntax (EX Series Switches)

request system software add *package-name*
<best-effort-load>
<delay-restart>
<force>
<no-copy>
<no-validate>
<re0 | re1>
<reboot>
<set [*package-name1 package-name2*]>
<upgrade-with-config>
<validate>
<validate-on-host *hostname*>
<validate-on-routing-engine *routing-engine*>

Syntax (TX Matrix Router)

request system software add *package-name*
<best-effort-load>
<delay-restart>
<force>
<lcc *number* | scc>
<no-copy>
<no-validate>
<re0 | re1>
<reboot>

<set [*package-name1 package-name2*]>
<unlink>
<upgrade-with-config>
<validate>
<validate-on-host *hostname*>
<validate-on-routing-engine *routing-engine*>

Syntax (TX Matrix Plus Router)

request system software add *package-name*
<best-effort-load>
<delay-restart>
<force>
<lcc *number* | sfc *number*>
<no-copy>
<no-validate>
<re0 | re1>
<reboot>
<set [*package-name1 package-name2*]>
<unlink>
<upgrade-with-config>
<validate>
<validate-on-host *hostname*>
<validate-on-routing-engine *routing-engine*>

Syntax (MX Series Router)

request system software add *package-name*
<best-effort-load>
<delay-restart>
<device-alias *alias-name*>
<force>
<member *member-id*>
<no-copy>
<no-validate>
<re0 | re1>
<reboot>
<satellite *slot-id*>
<set [*package-name1 package-name2*]>
<upgrade-group [all |*upgrade-group-name*]>
<unlink>
<upgrade-with-config>
<validate>
<version *version-string*>
<validate-on-host *hostname*>
<validate-on-routing-engine *routing-engine*>

Syntax (QFX Series)

request system software add *package-name*
<best-effort-load>
<component all>
<delay-restart>
<force>
<force-host>
<no-copy>
<partition>
<reboot>
<unlink>
<upgrade-with-config>

Syntax (OCX Series)

request system software add *package-name*
<best-effort-load>
<delay-restart>
<force>
<force-host>
<no-copy>
<no-validate>
<reboot>
<unlink>
<upgrade-with-config>
<validate>

Syntax (SRX Series)

request system software add *package-name*
<best-effort-load>
<delay-restart>
<no-copy>
<on-primary>
<partition>
<reboot>
<unlink>
<validate>
<validate-on-host *hostname*>
<validate-on-routing-engine *routing-engine*>

Release Information

Command introduced before Junos OS Release 7.4.
best-effort-load and **unlink** options added in Junos OS Release 7.4.
Command introduced in Junos OS Release 9.0 for EX Series switches.
sfc option introduced in Junos OS Release 9.6 for the TX Matrix Plus router.
Partition option introduced in the command in Junos OS Release 10.1 for SRX Series devices.
Command introduced in Junos OS Release 11.1 for the QFX Series.
set [*package-name1 package-name2*] option added in Junos OS Release 11.1 for EX Series switches. Added in Junos OS Release 12.2 for M Series, MX Series, and T Series routers.

NOTE: On EX Series switches, the **set [*package-name1 package-name2*]** option allows you to install only two software packages on a mixed EX4200 and EX4500 Virtual Chassis, whereas, on M Series, MX Series, and T Series routers, the **set [*package-name1 package-name2 package-name3*]** option allows you to install multiple software packages and software add-on packages at the same time.

upgrade-with-config and **upgrade-with-config-format *format*** options added in Junos OS Release 12.3 for M Series routers, MX Series routers, and T Series routers, EX Series Ethernet switches, and QFX Series devices.
Command introduced in Junos OS Release 14.1X53-D20 for the OCX Series.
device-alias, **satellite**, **upgrade-group**, and **version** options introduced in Junos OS Release 14.2R3 for Junos Fusion.
validate-on-host and **validate-on-routing-engine** options added in Junos OS Release 15.1F3 for PTX5000 routers and MX240, MX480, and MX960 routers.

upgrade-with-config-format ***format*** option deleted in Junos OS Release 16.1 for M Series routers, MX Series routers, and T Series routers, EX Series Ethernet switches, and QFX Series devices.

Description

NOTE: We recommend that you always download the software image to **/var/tmp** only. On EX Series and QFX Series switches, you must use the **/var/tmp** directory. Other directories are not supported.

Install a software package or bundle on the router or switch.

For information on valid filename and URL formats, see *Format for Specifying Filenames and URLs in Junos OS CLI Commands*.

CAUTION: Any configuration changes performed after inputting the **request system software add** command will be lost when the system reboots with an upgraded version of Junos OS.

NOTE: Starting from Junos OS Release 17.2R1, PTX10008 routers do not support the **request system software add** command. Starting from Junos OS Release 17.4R1, PTX10016 routers do not support the **request system software add** command. Use the **request vmhost software add** command instead of the **request system software add** command on the PTX10008 and PTX10016 routers to install or upgrade the Junos OS software package or bundle on the router. See *request vmhost software add*.

NOTE: Starting from Junos OS Release 18.1R1, MX10003 routers do not support the **request system software add** command. Use the **request vmhost software add** command instead of the **request system software add** command on the MX10003 routers to install or upgrade the Junos OS software package or bundle on the router. See *request vmhost software add*.

NOTE: When graceful Routing Engine switchover (GRES) is enabled on a device, you must perform a unified ISSU operation to update the software running on the device. With GRES enabled, if you attempt to perform a software upgrade by entering the **request system software add** *package-name* command, an error message is displayed stating that only in-service-software-upgrades are supported when GRES is configured. In such a case, you must either remove the GRES configuration before you attempt the upgrade or perform a unified ISSU.

NOTE: Starting with Junos OS Release 15.1F3, the statement **request system software add** installs a software package for the guest OS only for the PTX5000 router with RE-DUO-C2600-16G, and for MX240, MX480, and MX960 routers with RE-S-1800X4-32G-S.

Starting with Junos OS Release 15.1F5, the statement **request system software add** installs a software package for the guest OS only for the MX2010 and MX2020 routers with REMX2K-1800-32G-S.

On these routers, in order to install both Junos software and host software packages, use the **request vmhost software add** command.

Options *package-name*—Location from which the software package or bundle is to be installed. For example:

- **/var/tmp/***package-name*—For a software package or bundle that is being installed from a local directory on the router or switch.
- ***protocol://hostname/pathname/package-name***—For a software package or bundle that is to be downloaded and installed from a remote location. Replace ***protocol*** with one of the following:
  - **ftp**—File Transfer Protocol.
    Use **ftp:***//hostname/pathname/package-name*. To specify authentication credentials, use **ftp:***//<username>:<password>@hostname/pathname/package-name*. To have the system prompt you for the password, specify **prompt** in place of the password. If a password is required, and you do not specify the password or **prompt**, an error message is displayed.
  - **http**—Hypertext Transfer Protocol.
    Use **http:***//hostname/pathname/package-name*. To specify authentication credentials, use **http:***//<username>:<password>@hostname/pathname/package-name*. If a password is required and you omit it, you are prompted for it.
  - **scp**—Secure copy (not available for limited editions).

Use **scp***://hostname/pathname/package-name*. To specify authentication credentials, use **scp***://<username>:<password>@hostname/pathname/package-name*.

NOTE:

- The *pathname* in the protocol is the relative path to the user's home directory on the remote system and not the root directory.
- Do not use the **scp** protocol in the **request system software add** command to download and install a software package or bundle from a remote location. The previous statement does not apply to the QFabric switch. The software upgrade is handled by the management process (mgd), which does not support scp.
  Use the **file copy** command to copy the software package or bundle from the remote location to the /var/tmp directory on the hard disk:
  file copy scp*://source/package-name* /var/tmp
  Then install the software package or bundle using the **request system software add** command:
  request system software add /var/tmp/*package-name*

best-effort-load—(Optional) Activate a partial load and treat parsing errors as warnings instead of errors.

component all—(QFabric systems only) (Optional) Install software package on all of the QFabric components.

delay-restart—(Optional) Install a software package or bundle, but do not restart software processes.

device-alias ***alias-name***—(Junos Fusion only) (Optional) Install the satellite software package onto the specified satellite device using the satellite device's alias name.

force—(Optional) Force the addition of the software package or bundle (ignore warnings).

force-host—(Optional) Force the addition of host software package or bundle (ignore warnings) on the QFX5100 device.

lcc ***number*** —(TX Matrix routers and TX Matrix Plus routers only) (Optional) In a routing matrix based on the TX Matrix router, install a software package or bundle on a T640 router that is connected to the TX Matrix router. In a routing matrix based on the TX Matrix Plus router, install a software package or bundle on a router that is connected to the TX Matrix Plus router.

Replace *number* with the following values depending on the LCC configuration:

- 0 through 3, when T640 routers are connected to a TX Matrix router in a routing matrix.
- 0 through 3, when T1600 routers are connected to a TX Matrix Plus router in a routing matrix.
- 0 through 7, when T1600 routers are connected to a TX Matrix Plus router with 3D SIBs in a routing matrix.
- 0, 2, 4, or 6, when T4000 routers are connected to a TX Matrix Plus router with 3D SIBs in a routing matrix.

member *member-id*—(MX Series routers only) (Optional) Install a software package on the specified Virtual Chassis member. Replace ***member-id*** with a value of 0 or 1.

partition —(QFX3500 switches only) (Optional) Format and repartition the media before installation.

satellite *slot-id*—(Junos Fusion only) (Optional) Install the satellite software package onto the specified satellite device using the satellite devices FPC slot identifier.

scc—(TX Matrix routers only) (Optional) Install a software package or bundle on a Routing Engine on a TX Matrix router (or switch-card chassis).

sfc *number*—(TX Matrix Plus routers only) (Optional) Install a software package or bundle on a Routing Engine on a TX Matrix Plus router. Replace *number* with 0.

no-copy—(Optional) Install a software package or bundle, but do not save copies of the package or bundle files.

no-validate—(Optional) When loading a software package or bundle with a different release, suppress the default behavior of the **validate** option.

NOTE: **Software packages from unidentified providers cannot be loaded. To authorize providers, include the provider-id statement at the [edit system extensions provider] hierarchy level.**

on-primary—(SRX Series devices only) Install image on the primary partition.

re0 | re1—(Optional) On routers or switches that support dual or redundant Routing Engines, load a software package or bundle on the Routing Engine in slot 0 (re0) or the Routing Engine in slot 1 (re1).

reboot—(Optional) After adding the software package or bundle, reboot the system. On a QFabric switch, the software installation is not complete until you reboot the component for which you have installed the software.

set [*package-name1 package-name2*]—(Mixed EX4200 and EX4500 Virtual Chassis, M Series, MX Series, and T Series routers only) (Optional) Install multiple packages at same time:

- In the case of mixed EX4200 and EX4500 Virtual Chassis, install two software packages—a package for an EX4200 switch and the same release of the package for an EX4500 switch—to upgrade all member switches in a mixed EX4200 and EX4500 Virtual Chassis.
- In the case of M Series, MX Series, and T Series routers, install multiple (two or more) software packages and software add-on packages at the same time. The variable ***package-name*** can either be a list of installation packages, each separated by a blank space, or the full URL to the directory or tar file containing the list of installation packages.

In each case, ***installation-package*** can either be a list of installation packages, each separated by a blank space, or the full URL to the directory or tar file containing the list of installation packages.

Use the **request system software add set** command to retain any SDK configuration by installing the SDK add-on packages along with the core Junos OS installation package.

unlink—(Optional) On M Series, T Series, MX Series routers, and SRX Series devices, use the unlink option to remove the software package from this directory after a successful upgrade is completed.

upgrade-group [all |*upgrade-group-name*]—(Junos Fusion only) (Required to configure a Junos Fusion using autoconversion or manual conversion) Associate a satellite software image with a satellite software upgrade group. The satellite software package is associated with the specified satellite software upgrade group using the *upgrade-group-name*, or for all satellite software upgrade groups in a Junos Fusion when the all keyword is specified.

A satellite software upgrade group is a group of satellite devices in a Junos Fusion that are designated to upgrade to the same satellite software version using the same satellite software package. See *Understanding Software in a Junos Fusion Provider Edge*, *Understanding Software in a Junos Fusion Enterprise*, and "Managing Satellite Software Upgrade Groups in a Junos Fusion" on page 107.

upgrade-with-config—(Optional) Install one or more configuration files.

NOTE: **Configuration files specified with this option must have the extension .text or .xml and have the extension specified. Using the extension .txt will not work.**

validate—(Optional) Validate the software package or bundle against the current configuration as a prerequisite to adding the software package or bundle. This is the

default behavior when the software package or bundle being added is a different release.

NOTE: The validate option only works on systems that do not have graceful-switchover (GRES) enabled. To use the validate option on a system with GRES, either disable GRES for the duration of the installation, or install using the command request system software in-service-upgrade, which requires nonstop active routing (NSR) to be enabled when using GRES.

validate-on-host *hostname*—(Optional) Validate the software package by comparing it to the running configuration on a remote Junos OS host. Specify a host, replacing ***hostname*** with the remote hostname. You can optionally provide the username that will be used to log in to the remote host by specifying the hostname in the format **user@hostname**.

validate-on-routing-engine *routing-engine*—(Optional) Validate the software bundle or package by comparing it to the running configuration on a Junos OS Routing Engine on the same chassis. Specify a Routing Engine, replacing ***routing-engine*** with the routing engine name.

Additional Information

Before upgrading the software on the router or switch, when you have a known stable system, issue the **request system snapshot** command to back up the software, including the configuration, to the **/altroot** and **/altconfig** file systems. After you have upgraded the software on the router or switch and are satisfied that the new package or bundle is successfully installed and running, issue the **request system snapshot** command again to back up the new software to the **/altroot** and **/altconfig** file systems.

NOTE: The request system snapshot command is currently not supported on the QFabric system. Also, you cannot add or install multiple packages on a QFabric system.

After you run the **request system snapshot** command, you cannot return to the previous version of the software because the running and backup copies of the software are identical.

If you are upgrading more than one package at the same time, delete the operating system package, jkernel, last. Add the operating system package, jkernel, first and the routing software package, jroute, last. If you are upgrading all packages at once, delete and add them in the following order:

```
user@host> request system software add /var/tmp/jbase
user@host> request system software add /var/tmp/jkernel
user@host> request system software add /var/tmp/jpfe
```

```
user@host> request system software add /var/tmp/jdocs
user@host> request system software add /var/tmp/jroute
user@host> request system software add /var/tmp/jcrypto
```

By default, when you issue the **request system software add *package-name*** command on a TX Matrix master Routing Engine, all the T640 master Routing Engines that are connected to it are upgraded to the same version of software. If you issue the same command on the TX Matrix backup Routing Engine, all the T640 backup Routing Engines that are connected to it are upgraded to the same version of software.

Likewise, when you issue the **request system software add *package-name*** command on a TX Matrix Plus master Routing Engine, all the T1600 or T4000 master Routing Engines that are connected to it are upgraded to the same version of software. If you issue the same command on the TX Matrix Plus backup Routing Engine, all the T1600 or T4000 backup Routing Engines that are connected to it are upgraded to the same version of software.

When you install a software package and request a system reboot or install a package that requires rebuilding the Junos OS schema, such as an OpenConfig package, devices that use the ephemeral configuration database delete all ephemeral configuration data in the process of rebooting the system or rebuilding the schema. To restore the ephemeral configuration data, you must load and commit the data to the ephemeral database again.

Required Privilege Level

maintenance

Related Documentation

- *Format for Specifying Filenames and URLs in Junos OS CLI Commands*
- request system software delete on page 164
- request system software rollback on page 168
- request system storage cleanup on page 173
- *Installing Software Packages on QFX Devices*
- *Upgrading Software on a QFabric System*
- Managing Satellite Software Upgrade Groups in a Junos Fusion on page 107
- *request system software add (Maintenance)*
- *Routing Matrix with a TX Matrix Plus Router Solutions Page*

List of Sample Output

Output Fields

When you enter this command, you are provided feedback on the status of your request.

Sample Output

request system software add validate

```
user@host> request system software add validate /var/tmp/ jinstall-7.2R1.7-domestic-signed.tgz
Checking compatibility with configuration
Initializing...
Using jbase-7.1R2.2
Using /var/tmp/jinstall-7.2R1.7-domestic-signed.tgz
Verified jinstall-7.2R1.7-domestic.tgz signed by PackageProduction_7_2_0
Using /var/validate/tmp/jinstall-signed/jinstall-7.2R1.7-domestic.tgz
Using /var/validate/tmp/jinstall/jbundle-7.2R1.7-domestic.tgz
Checking jbundle requirements on /
Using /var/validate/tmp/jbundle/jbase-7.2R1.7.tgz
Using /var/validate/tmp/jbundle/jkernel-7.2R1.7.tgz
Using /var/validate/tmp/jbundle/jcrypto-7.2R1.7.tgz
Using /var/validate/tmp/jbundle/jpfe-7.2R1.7.tgz
Using /var/validate/tmp/jbundle/jdocs-7.2R1.7.tgz
Using /var/validate/tmp/jbundle/jroute-7.2R1.7.tgz
Validating against /config/juniper.conf.gz
mgd: commit complete
Validation succeeded
Validating against /config/rescue.conf.gz
mgd: commit complete
Validation succeeded
Installing package '/var/tmp/jinstall-7.2R1.7-domestic-signed.tgz' ...
Verified jinstall-7.2R1.7-domestic.tgz signed by PackageProduction_7_2_0
Adding jinstall...

WARNING:     This package will load JUNOS 7.2R1.7 software.
WARNING:     It will save JUNOS configuration files, and SSH keys
WARNING:     (if configured), but erase all other files and information
WARNING:     stored on this machine.  It will attempt to preserve dumps
WARNING:     and log files, but this can not be guaranteed.  This is the
WARNING:     pre-installation stage and all the software is loaded when
WARNING:     you reboot the system.

Saving the config files ...
Installing the bootstrap installer ...

WARNING:     A REBOOT IS REQUIRED TO LOAD THIS SOFTWARE CORRECTLY. Use the
WARNING:     'request system reboot' command when software installation is
WARNING:     complete. To abort the installation, do not reboot your system,
WARNING:     instead use the 'request system software delete jinstall'
WARNING:     command as soon as this operation completes.

Saving package file in /var/sw/pkg/jinstall-7.2R1.7-domestic-signed.tgz ...
Saving state for rollback ...
```

request system software add /var/tmp/ no-validate

```
user@host> request system software add no-validate
/var/tmp/junos-install-mx-x86-32-15.1R1.9.tgz
Installing package '/var/tmp/junos-install-mx-x86-32-15.1R1.9.tgz' ...
Verified manifest signed by PackageProductionEc_2015
Verified manifest signed by PackageProductionRSA_2015
Verified contents.iso
Verified issu-indb.tgz
Verified junos-x86-32.tgz
Verified kernel
```

```
Verified metatags
Verified package.xml
Verified pkgtools.tgz
camcontrol: not found
camcontrol: not found
Verified manifest signed by PackageProductionEc_2015
Saving the config files ...
NOTICE: uncommitted changes have been saved in
/var/db/config/juniper.conf.pre-install
Saving package file in
/var/sw/pkg/junos-install-x86-32-domestic-20150618.043753_builder_junos_151_r1.tgz
 ...
Saving state for rollback ...
```

request system software add no-copy no-validate reboot

```
user@host> request system software add no-copy no-validate junos-install-srx-x86-64-17.3R1.tgz
reboot
Verified junos-install-srx-x86-64-17.3R1 signed by PackageProductionEc_2017 method
 ECDSA256+SHA256
Verified manifest signed by PackageProductionEc_2017 method ECDSA256+SHA256
Checking PIC combinations
Verified fips-mode signed by PackageProductionEc_2017 method ECDSA256+SHA256
Adding fips-mode-x86-32-20170728.153050_builder_junos_173_r1 ...
Verified jail-runtime signed by PackageProductionEc_2017 method ECDSA256+SHA256
Adding jail-runtime-x86-32-20170725.352915_builder_stable_10 ...
Verified jdocs signed by PackageProductionEc_2017 method ECDSA256+SHA256
Adding jdocs-x86-32-20170728.153050_builder_junos_173_r1 ...
Verified jfirmware signed by PackageProductionEc_2017 method ECDSA256+SHA256
Adding jfirmware-x86-32-17.3R1 ...
Verified jpfe-X signed by PackageProductionEc_2017 method ECDSA256+SHA256
Adding jpfe-X-x86-32-20170728.153050_builder_junos_173_r1 ...
Verified jpfe-X960 signed by PackageProductionEc_2017 method ECDSA256+SHA256
Adding jpfe-X960-x86-32-20170728.153050_builder_junos_173_r1 ...
Verified jpfe-common signed by PackageProductionEc_2017 method ECDSA256+SHA256
Adding jpfe-common-x86-32-20170728.153050_builder_junos_173_r1 ...
Verified jpfe-fips signed by PackageProductionEc_2017 method ECDSA256+SHA256
Verified jpfe-wrlinux signed by PackageProductionEc_2017 method ECDSA256+SHA256
Adding jpfe-wrlinux-x86-32-20170728.153050_builder_junos_173_r1 ...
Verified jsd-jet-1 signed by PackageProductionEc_2017 method ECDSA256+SHA256
Adding jsd-x86-32-17.3R1-jet-1 ...
```

request system software add validate-on-host

```
user@host> request system software add validate-on-host user@xyz
:/var/tmp/jinstall-15.1-20150516_ib_15_2_psd.0-domestic-signed.tgz
user@host> request system software add validate-on-host user@xyz
:/var/tmp/jinstall-15.1-20150516_ib_15_2_psd.0-domestic-signed.tgz
Extracting JUNOS version from package...
Connecting to remote host xyz...
Password:
Sending configuration to xyz...
Validating configuration on xyz...
PACKAGETYPE: not found
Checking compatibility with configuration
Initializing...
Using jbase-15.1-20150516_ib_15_2_psd.0
Verified manifest signed by PackageDevelopmentEc_2015
Using jruntime-15.1-20150516_ib_15_2_psd.0
Verified manifest signed by PackageDevelopmentEc_2015
```

```
Using jkernel-15.1-20150516_ib_15_2_psd.0
Verified manifest signed by PackageDevelopmentEc_2015
Using jroute-15.1-20150516_ib_15_2_psd.0
Verified manifest signed by PackageDevelopmentEc_2015
Using jcrypto-15.1-20150516_ib_15_2_psd.0
Verified manifest signed by PackageDevelopmentEc_2015
Using jweb-15.1-20150516_ib_15_2_psd.0
Verified manifest signed by PackageDevelopmentEc_2015
Using /var/packages/jtools-15.1-20150516_ib_15_2_psd.0
Verified manifest signed by PackageDevelopmentEc_2015
Using /var/tmp/config.tgz
Hardware Database regeneration succeeded
Validating against /config/juniper.conf.gz
mgd: warning: schema: init: 'logical-systems-vlans' contains-node 'juniper-config
 vlans': not found
mgd: commit complete
Validation succeeded
Installing package
'/var/tmp/jinstall-15.1-20150516_ib_15_2_psd.0-domestic-signed.tgz' ...
Verified jinstall-15.1-20150516_ib_15_2_psd.0-domestic.tgz signed by
PackageDevelopmentEc_2015
Adding jinstall...

WARNING:     The software that is being installed has limited support.
WARNING:     Run 'file show /etc/notices/unsupported.txt' for details.


WARNING:     This package will load JUNOS 15.1-20150516_ib_15_2_psd.0 software.
WARNING:     It will save JUNOS configuration files, and SSH keys
WARNING:     (if configured), but erase all other files and information
WARNING:     stored on this machine.  It will attempt to preserve dumps
WARNING:     and log files, but this can not be guaranteed.  This is the
WARNING:     pre-installation stage and all the software is loaded when
WARNING:     you reboot the system.

Saving the config files ...
NOTICE: uncommitted changes have been saved in
/var/db/config/juniper.conf.pre-install
Installing the bootstrap installer ...

WARNING:     A REBOOT IS REQUIRED TO LOAD THIS SOFTWARE CORRECTLY. Use the
WARNING:     'request system reboot' command when software installation is
WARNING:     complete. To abort the installation, do not reboot your system,
WARNING:     instead use the 'request system software delete jinstall'
WARNING:     command as soon as this operation completes.

Saving package file in
/var/sw/pkg/jinstall-15.1-20150516_ib_15_2_psd.0-domestic-signed.tgz ...
Saving state for rollback ...
```

Sample Output

request system software add (Mixed EX4200 and EX4500 Virtual Chassis)

```
user@switch> request system software add set
[/var/tmp/jinstall-ex-4200-11.1R1.1-domestic-signed.tgz
/var/tmp/jinstall-ex-4500-11.1R1.1-domestic-signed.tgz]
...
```

request system software add component all (QFabric Systems)

```
user@switch> request system software add /pbdata/packages/jinstall-qfabric-12.2X50-D1.3.rpm
component all
...
```

request system software add upgrade-group (Junos Fusion)

```
user@aggregation-device> request system software add /var/tmp/satellite-3.0R1.1-signed.tgz
upgrade-group group1
```

request system software delete

List of Syntax

Syntax on page 164
Syntax (TX Matrix Router) on page 164
Syntax (TX Matrix Plus Router) on page 164

Syntax

request system software delete *software-package*
<force>
<reboot>
<set [*package-name package-name*]>
<upgrade-group [all |*upgrade-group-name*]>
<version *version-string*>

Syntax (TX Matrix Router)

request system software delete *software-package*
<force>
<lcc *number* | scc>
<reboot>
<set [*package-name package-name*]>

Syntax (TX Matrix Plus Router)

request system software delete *software-package*
<force>
<lcc *number* | sfc *number*>
<reboot>
<set [*package-name package-name*]>

Release Information

Command introduced before Junos OS Release 7.4.
Command introduced in Junos OS Release 9.0 for EX Series switches.
sfc option introduced in Junos OS Release 9.6 for the TX Matrix Plus router.
Command introduced in Junos OS Release 11.1 for the QFX Series.
set [*package-name package-name*] option added in Junos OS Release 12.2 for M Series, MX Series, and T Series routers.
reboot option introduced in Junos OS Release 12.3.
Command introduced in Junos OS Release 14.1X53-D20 for the OCX Series.
upgrade-group, and **version** options introduced in Junos OS Release 14.2R3 for Junos Fusion.

Description

Remove a software package or bundle from the router or switch.

CAUTION: **Before removing a software package or bundle, make sure that you have already placed the new software package or bundle that you intend to load onto the router or switch.**

Options

software-package—Software package or bundle name. You can delete any or all of the following software bundles or packages:

- **jbase**—(Optional) Junos base software suite
- **jcrypto**—(Optional, in domestic version only) Junos security software
- **jdocs**—(Optional) Junos online documentation file
- **jkernel**—(Optional) Junos kernel software suite
- **jpfe**—(Optional) Junos Packet Forwarding Engine support
- **jroute**—(Optional) Junos routing software suite
- **junos**—(Optional) Junos base software

NOTE: **On EX Series switches, some of the package names are different than those listed. To see the list of packages that you can delete on an EX Series switch, enter the command show system software.**

force—(Optional) Ignore warnings and force removal of the software.

lcc *number*—(TX Matrix routers and TX Matrix Plus routers only) (Optional) In a routing matrix, delete a software package or bundle on a T640 router indicated by **lcc *number*** that is connected to the TX Matrix router. In a routing matrix, delete a software package or bundle on a router indicated by **lcc *number*** that is connected to the TX Matrix Plus router.

Replace *number* with the following values depending on the LCC configuration:

- 0 through 3, when T640 routers are connected to a TX Matrix router in a routing matrix.
- 0 through 3, when T1600 routers are connected to a TX Matrix Plus router in a routing matrix.
- 0 through 7, when T1600 routers are connected to a TX Matrix Plus router with 3D SIBs in a routing matrix.
- 0, 2, 4, or 6, when T4000 routers are connected to a TX Matrix Plus router with 3D SIBs in a routing matrix.

re0 | re1—(Optional) On routers or switches that support dual or redundant Routing Engines, delete a software package or bundle on the Routing Engine in slot 0 (re0) or the Routing Engine in slot 1 (re1).

reboot—As of Junos OS 12.3 and greater, automatically reboot upon completing the **request system software delete** command.

scc—(TX Matrix routers only) (Optional) Remove an extension or upgrade package from the TX Matrix router (or switch-card chassis).

set [*package-name package-name*]—(M Series, MX Series, and T Series routers only) (Optional) Install multiple software packages or software add-on packages at the same time.

sfc *number*—(TX Matrix Plus routers only) (Optional) Remove an extension or upgrade package from the TX Matrix Plus router. Replace *number* with 0.

upgrade-group [all |*upgrade-group-name*]—(Junos Fusion only) Delete the satellite software image association with the specified satellite software upgrade group.

A satellite software upgrade group is a group of satellite devices in the same Junos Fusion that are designated to upgrade to the same satellite software version using the same satellite software package.

version *version-string*—(Junos Fusion only) (Optional) Delete a satellite software package association with a satellite software upgrade group by selecting the satellite software package's version.

Additional Information

Before upgrading the software on the router or switch, when you have a known stable system, issue the **request system snapshot** command to back up the software, including the configuration, to the /altroot and /altconfig file systems (on routers) or the /, /altroot, /config, /var, and /var/tmp file systems (on switches). After you have upgraded the software on the router or switch and are satisfied that the new packages are successfully installed and running, issue the **request system snapshot** command again to back up the new software to the /altroot and /altconfig file systems (on routers) or the /, /altroot, /config, /var, and /var/tmp file systems (on switches). After you run the **request system snapshot** command, you cannot return to the previous version of the software, because the running and backup copies of the software are identical.

When you delete a software package and request a system reboot or delete a package that requires rebuilding the Junos OS schema, such as an OpenConfig package, devices that use the ephemeral configuration database delete all ephemeral configuration data in the process of rebooting the system or rebuilding the schema. To restore the ephemeral configuration data, you must load and commit the data to the ephemeral database again.

Required Privilege Level

maintenance

Related Documentation

- request system software add on page 150
- request system software rollback on page 168
- *request system software validate*
- *Routing Matrix with a TX Matrix Plus Router Solutions Page*

List of Sample Output

request system software delete jdocs on page 167

Output Fields

When you enter this command, you are provided feedback on the status of your request.

Sample Output

request system software delete jdocs

The following example displays the system software packages before and after the **jdocs** package is deleted through the **request system software delete** command:

```
user@host> show system software
Information for jbase:

Comment:
JUNOS Base OS Software Suite [7.2R1.7]


Information for jcrypto:

Comment:
JUNOS Crypto Software Suite [7.2R1.7]


Information for jdocs:

Comment:
JUNOS Online Documentation [7.2R1.7]


Information for jkernel:

Comment:
JUNOS Kernel Software Suite [7.2R1.7]

...

user@host> request system software delete jdocs
Removing package 'jdocs' ...

user@host> show system software
Information for jbase:

Comment:
JUNOS Base OS Software Suite [7.2R1.7]


Information for jcrypto:

Comment:
JUNOS Crypto Software Suite [7.2R1.7]


Information for jkernel:

Comment:
JUNOS Kernel Software Suite [7.2R1.7]

...
```

request system software rollback

List of Syntax

Syntax

request system software rollback

Syntax (EX Series Switches)

request system software rollback
<all-members>
<local>
<member *member-id*>
<reboot>

Syntax (TX Matrix Router)

request system software rollback
<lcc *number* | scc>
<reboot>

Syntax (TX Matrix Plus Router)

request system software rollback
<lcc *number* | sfc *number*>
<reboot>

Syntax (MX Series Router)

request system software rollback
<all-members>
<device-alias *alias-name*>
<local>
<member *member-id*
<reboot>
<satellite *slot-id*>
<upgrade-group [all |*upgrade-group-name*]>

Release Information

Command introduced before Junos OS Release 7.4.
Command introduced in Junos OS Release 9.0 for EX Series switches.
sfc option introduced in Junos OS Release 9.6 for the TX Matrix Plus router.
Command introduced in Junos OS Release 11.1 for the QFX Series.
Command behavior changed in Junos OS Release 12.1.
reboot option introduced in Junos OS Release 12.3.
device-alias, **satellite**, and **upgrade-group** options introduced in Junos OS Release 14.2R3 for Junos Fusion.
force option deprecated in Junos OS Release 15.1 for Junos OS with Upgraded FreeBSD.

NOTE: To determine which platforms run Junos OS with Upgraded FreeBSD, see the table listing the platforms currently running Junos OS with upgraded FreeBSD in *Release Information for Junos OS with Upgraded FreeBSD*.

Description This command reverts to the last successfully installed package before the **request system software (add | delete)** command. It uses the copy stored in the **/var/sw/pkg** directory.

Additional Information

- On Junos Fusion, the **request system software rollback** command can be used to roll back the version of satellite software associated with a satellite software upgrade group. Rolling back the version of satellite software associated with a satellite software upgrade group triggers a satellite software upgrade.
- On M Series and T Series routers, if **request system software add <jinstall> reboot** was used for the previous installation, then **request system software rollback** has no effect. In this case, use **jinstall** to reinstall the required package.
- On M Series and T Series routers, if **request system software add <sdk1>** was used for the previous installation, then **request system software rollback** removes the last installed SDK package (**sdk1** in this example).
- On SRX Series devices with dual root systems, when **request system software rollback** is run, the system switches to the alternate root. Each root can have a different version of Junos OS. Roll back takes each root back to the previously installed image.
- On QFX3500 and QFX3600 devices in a mixed Virtual Chassis, when the **request system software rollback** command is issued, the system does not rollback to the image stored in the alternate partition.
- On QFX5100 switches, the **reboot** option has been removed. To reboot the switch after a software rollback, issue the **request system reboot** command as a separate, secondary command.

Options **all-members**—(EX4200 switches and MX Series routers only) (Optional) Attempt to roll back to the previous set of packages on all members of the Virtual Chassis configuration.

device-alias ***alias-name***—(Junos Fusion only) (Optional) Rollback the satellite software package onto the specified satellite device using the satellite devices FPC slot identifier.

lcc ***number***—(TX Matrix routers and TX Matrix Plus routers only) (Optional) On a TX Matrix router, attempt to roll back to the previous set of packages on a T640 router connected to the TX Matrix router. On a TX Matrix Plus router, attempt to roll back to the previous set of packages on a connected router connected to the TX Matrix Plus router.

Replace *number* with the following values depending on the LCC configuration:

- 0 through 3, when T640 routers are connected to a TX Matrix router in a routing matrix.
- 0 through 3, when T1600 routers are connected to a TX Matrix Plus router in a routing matrix.

- 0 through 7, when T1600 routers are connected to a TX Matrix Plus router with 3D SIBs in a routing matrix.
- 0, 2, 4, or 6, when T4000 routers are connected to a TX Matrix Plus router with 3D SIBs in a routing matrix.

local—(EX4200 switches and MX Series routers only) (Optional) Attempt to roll back to the previous set of packages on the local Virtual Chassis member.

member ***member-id***—(EX4200 switches and MX Series routers only) (Optional) Attempt to roll back to the previous set of packages on the specified member of the Virtual Chassis configuration. For EX4200 switches, replace ***member-id*** with a value from 0 through 9. For an MX Series Virtual Chassis, replace *member-id* with a value of 0 or 1.

none—For all versions of Junos OS up to and including Junos OS 11.4, revert to the set of software as of the last successful **request system software add**. As of Junos OS 12.1 and later, revert to the last known good state before the most recent **request system software (add | delete)** command.

reboot—For Junos OS 12.3 and later, the system reboots automatically to complete the rollback.

satellite ***slot-id***—(Junos Fusion only) (Optional) Roll back the satellite software package onto the specified satellite device using the satellite devices FPC slot identifier.

scc—(TX Matrix routers only) (Optional) Attempt to roll back to the previous set of packages on the TX Matrix router (or switch-card chassis).

sfc ***number***—(TX Matrix Plus routers only) (Optional) Attempt to roll back to the previous set of packages on the TX Matrix Plus router. Replace *number* with 0.

upgrade-group [all |*upgrade-group-name*]—(Junos Fusion only) Roll back the satellite software image associated with the specified satellite software upgrade group, or for all satellite software upgrade groups in the Junos Fusion when **all** is entered.

Required Privilege Level

maintenance

Related Documentation

- *request system software abort*
- request system software add on page 150
- request system software delete on page 164
- *request system software validate*
- *request system configuration rescue delete*
- *request system configuration rescue save*
- *Routing Matrix with a TX Matrix Plus Router Solutions Page*

List of Sample Output request system software rollback on page 172

Output Fields When you enter this command, you are provided feedback on the status of your request.

Sample Output

request system software rollback

```
user@host> request system software rollback
Verified SHA1 checksum of ./jbase-7.2R1.7.tgz
Verified SHA1 checksum of ./jdocs-7.2R1.7.tgz
Verified SHA1 checksum of ./jroute-7.2R1.7.tgz
Installing package './jbase-7.2R1.7.tgz' ...
Available space: 35495 require: 7335
Installing package './jdocs-7.2R1.7.tgz' ...
Available space: 35339 require: 3497
Installing package './jroute-7.2R1.7.tgz' ...
Available space: 35238 require: 6976
NOTICE: uncommitted changes have been saved in
/var/db/config/juniper.conf.pre-install
Reloading /config/juniper.conf.gz ...
Activating /config/juniper.conf.gz ...
mgd: commit complete
Restarting mgd ...
Restarting aprobed ...
Restarting apsd ...
Restarting cosd ...
Restarting fsad ...
Restarting fud ...
Restarting gcdrd ...
Restarting ilmid ...
Restarting irsd ...
Restarting l2tpd ...
Restarting mib2d ...
Restarting nasd ...
Restarting pppoed ...
Restarting rdd ...
Restarting rmopd ...
Restarting rtspd ...
Restarting sampled ...
Restarting serviced ...
Restarting snmpd ...
Restarting spd ...
Restarting vrrpd ...

WARNING: cli has been replaced by an updated version:
CLI release 7.2R1.7 built by builder on 2005-04-22 02:03:44 UTC
Restart cli using the new version ? [yes,no] (yes) yes

Restarting cli ...
user@host
```

request system storage cleanup

List of Syntax

Syntax

```
request system storage cleanup
<dry-run>
<no-confirm>
<re0 | re1 | routing-engine (backup | both | local | master | other)>
```

Syntax (EX Series Switches)

```
request system storage cleanup
<all-members>
<dry-run>
<local>
<member member-id>
<no-confirm>
<re0 | re1 | routing-engine (backup | both | local | master | other)>
<satellite [slot-id slot-id |device-alias alias-name]>
```

Syntax (MX Series Router)

```
request system storage cleanup
<all-members>
<dry-run>
<local>
<member member-id>
<no-confirm>
<re0 | re1 | routing-engine (backup | both | local | master | other)>
<satellite [slot-id slot-id |device-alias alias-name]>
```

Syntax (QFX Series)

```
request system storage cleanup
<component (serial number | UUID | all)>
<director-group name>
<dry-run>
<infrastructure name>
<interconnect-device name>
<name-tag name-tag>
<no-confirm>
<node-group name>
<prune>
<qfabric (component name) | dry-run | name-tag | repository)>
<repository (core | log)>
<re0 | re1 | routing-engine (backup | both | local | master | other)>
```

Syntax (SRX Series)

```
request system storage cleanup
<dry-run>
<no-confirm>
<re0 | re1 | routing-engine (backup | both | local | master | other)>
```

Release Information Command introduced in Junos OS Release 7.4.
dry-run option introduced in Junos OS Release 7.6.
Command introduced in Junos OS Release 9.0 for EX Series switches.
Command introduced in Junos OS Release 9.2 for SRX Series.
Command introduced in Junos OS Release 11.1 for the QFX Series.
Command introduced in Junos OS Release 14.1X53-D20 for the OCX Series.
satellite option introduced in Junos OS Release 14.2R3.
no-confirm and **(re0 |re1 | routing-engine (backup | both | local | master | other))** options introduced in Junos OS 17.3R1.

Description Free storage space on the router or switch by rotating log files and proposing a list of files for deletion. User input is required for file deletion. On a QFabric system, you can delete debug files located on individual devices or on the entire QFabric system.

Options **all-members**—(EX4200 switches and MX Series routers only) (Optional) Delete files on the Virtual Chassis master Routing Engine only.

NOTE: **To delete files on the other members of the Virtual Chassis configuration, log in to each backup Routing Engine and delete the files using the request system storage cleanup local command.**

component (*UUID* | *serial number* | all)—(QFabric systems only) (Optional) Delete files located on individual QFabric system devices or on the entire QFabric system.

director-group *name*—(QFabric systems only) (Optional) Delete files on the Director group.

dry-run—(Optional) List files proposed for deletion (without deleting them).

infrastructure *name*—(QFabric systems only) (Optional) Delete files on the fabric control Routing Engine and fabric manager Routing Engine.

interconnect-device *name*—(QFabric systems only) Optional) Delete files on the Interconnect device.

local—(EX4200 switches and MX Series routers only) (Optional) Delete files on the local Virtual Chassis member.

member *member-id*—(EX4200 switches and MX Series routers only) (Optional) Delete files on the specified member of the Virtual Chassis configuration. For EX4200 switches, replace ***member-id*** with a value from 0 through 9. For an MX Series Virtual Chassis, replace ***member-id*** with a value of 0 or 1.

name-tag *name-tag*—(QFabric systems only) (Optional) Delete debug files that match a specific regular expression.

node-group *name*—(QFabric systems only) (Optional) Delete files on the Node group.

no-confirm—(Optional) Do not ask for confirmation before doing the cleanup.

prune—(QFabric systems only) (Optional) Delete debug files located in either the core or log debug repositories of a QFabric system device.

qfabric component *name*—(QFabric systems only) (Optional) Delete debug files located in the debug repositories of a QFabric system device.

(re0 | re1 | routing-engine (backup | both | local | master | other))—(Optional) Request operation on system storage on RE0, RE1, or on specified Routing Engine by these classifications: backup, both, local, master, or other.

When Routing Engine is specified, the below message is shown before listing the files and deleting them.

```
Please check the list of files to be deleted using the dry-run option. i.e.
request system storage cleanup dry-run
Do you want to proceed ? [yes,no] (no)
```

repository (core | log)—(QFabric systems only) (Optional) Specify the repository on the QFabric system device for which you want to delete debug files.

satellite [slot-id *slot-id* | device-alias *alias-name*]—(Junos Fusion only) (Optional) Specify the satellite device in the Junos Fusion by FPC ID or device alias name for which you want to delete debug files.

Additional Information

If logging is configured and being used, the **dry-run** option rotates the log files. In that case, the output displays the message "Currently rotating log files, please wait." If no logging is currently under way, the output displays only a list of files to delete.

Required Privilege Level

maintenance

List of Sample Output

request system storage cleanup dry-run on page 176
request system storage cleanup on page 177
request system storage cleanup director-group (QFabric Systems) on page 177
request system storage cleanup infrastructure device-name (QFabric Systems) on page 179
request system storage cleanup interconnect-device device-name (QFabric Systems) on page 180
request system storage cleanup node-group group-name (QFabric Systems) on page 181
request system storage cleanup qfabric component device-name (QFabric Systems) on page 182
request system storage cleanup qfabric component device-name repository core (QFabric Systems) on page 182
request system storage cleanup qfabric component all (QFabric Systems) on page 182

Output Fields

Table 8 on page 176 describes the output fields for the **request system storage cleanup** command. Output fields are listed in the approximate order in which they appear.

Table 8: request system storage cleanup Output Fields

Field Name	Field Description
List of files to delete:	Shows list of files available for deletion.
Size	Size of the core-dump file.
Date	Last core-dump file modification date and time.
Name	Name of the core-dump file.
Directory to delete:	Shows list of directories available for deletion.
Repository scope:	Repository where core-dump files and log files are stored. The core-dump files are located in the **core** repository, and the log files are located in the **log** repository. The default **Repository scope** is shared since both the **core** and **log** repositories are shared by all of the QFabric system devices.
Repository head:	Name of the top-level repository location.
Repository name:	Name of the repository: **core** or **log**.
Creating list of debug artifacts to be removed under:	Shows location of files available for deletion.
List of debug artifacts to be removed under:	Shows list of files available for deletion.

Sample Output

request system storage cleanup dry-run

```
user@host> request system storage cleanup dry-run
Currently rotating log files, please wait.
This operation can take up to a minute.

List of files to delete:

         Size Date         Name
  11.4K Mar  8 15:00 /var/log/messages.1.gz
  7245B Feb  5 15:00 /var/log/messages.3.gz
  11.8K Feb 22 13:00 /var/log/messages.2.gz
  3926B Mar 16 13:57 /var/log/messages.0.gz
  3962B Feb 22 12:47 /var/log/sampled.1.gz
  4146B Mar  8 12:20 /var/log/sampled.0.gz
  4708B Dec 21 11:39 /var/log/sampled.2.gz
  7068B Jan 16 18:00 /var/log/messages.4.gz
  13.7K Dec 27 22:00 /var/log/messages.5.gz
   890B Feb 22 17:22 /var/tmp/sampled.pkts
  65.8M Oct 26 09:10 /var/sw/pkg/jinstall-7.4R1.7-export-signed.tgz
  63.1M Oct 26 09:13 /var/sw/pkg/jbundle-7.4R1.7.tgz
```

request system storage cleanup

```
user@host> request system storage cleanup
Currently rotating log files, please wait.
This operation can take up to a minute.

List of files to delete:

         Size Date         Name
  11.4K Mar  8 15:00 /var/log/messages.1.gz
  7245B Feb  5 15:00 /var/log/messages.3.gz
  11.8K Feb 22 13:00 /var/log/messages.2.gz
  3926B Mar 16 13:57 /var/log/messages.0.gz
  11.6K Mar  8 15:00 /var/log/messages.5.gz
  7254B Feb  5 15:00 /var/log/messages.6.gz
  12.9K Feb 22 13:00 /var/log/messages.8.gz
  3726B Mar 16 13:57 /var/log/messages.7.gz
  3962B Feb 22 12:47 /var/log/sampled.1.gz
  4146B Mar  8 12:20 /var/log/sampled.0.gz
  4708B Dec 21 11:39 /var/log/sampled.2.gz
  7068B Jan 16 18:00 /var/log/messages.4.gz
  13.7K Dec 27 22:00 /var/log/messages.5.gz
   890B Feb 22 17:22 /var/tmp/sampled.pkts
  65.8M Oct 26 09:10 /var/sw/pkg/jinstall-7.4R1.7-export-signed.tgz
  63.1M Oct 26 09:13 /var/sw/pkg/jbundle-7.4R1.7.tgz

Delete these files ? [yes,no] (yes)
```

request system storage cleanup director-group (QFabric Systems)

```
user@switch> request system storage cleanup director-group
List of files to delete:

         Size Date         Name
4.0K   2011-11-07 05:16:29  /tmp/2064.sfcauth
4.0K   2011-11-07 05:07:34  /tmp/30804.sfcauth
4.0K   2011-11-07 04:13:41  /tmp/26792.sfcauth
4.0K   2011-11-07 04:13:39  /tmp/26432.sfcauth
0      2011-11-07 07:45:40  /tmp/cluster_cleanup.log
1.3M   2011-11-07 07:39:11  /tmp/cn_monitor.20111107-052401.log
4.0K   2011-11-07 07:36:29  /tmp/clustat.28019.log
4.0K   2011-11-07 07:36:29  /tmp/clustat_x.28019.log
9.6M   2011-11-07 05:30:24  /tmp/sfc.2.log
4.0K   2011-11-07 05:28:11  /tmp/mgd-init.1320672491.log
248K   2011-11-07 05:19:24  /tmp/cn_monitor.20111107-045111.log
4.0K   2011-11-07 05:17:18  /tmp/clustat.3401.log
4.0K   2011-11-07 05:17:18  /tmp/clustat_x.3401.log
8.0K   2011-11-07 04:58:25  /tmp/mgd-init.1320670633.log
0      2011-11-07 04:54:01  /tmp/mysql_db_install_5.1.37.log
4.0K   2011-11-07 04:52:08  /tmp/cn_send.log
0      2011-11-07 04:52:00  /tmp/init_eth0.log
4.0K   2011-11-07 04:49:35  /tmp/install_interfaces.sh.log
4.0K   2011-11-07 04:48:15  /tmp/bootstrap.sh.log
160K   2011-11-07 04:47:43  /tmp/bootstrap_cleanup.log
38M    2011-11-07 04:42:42  /tmp/cn_monitor.20111104-110308.log
4.0K   2011-11-07 04:38:47  /tmp/clustat.30913.log
4.0K   2011-11-07 04:38:47  /tmp/clustat_x.30913.log
4.0K   2011-11-07 04:38:03  /tmp/dcf_upgrade.sh.remove.log
4.0K   2011-11-07 04:38:03  /tmp/peer_update.log
4.0K   2011-11-07 04:38:02  /tmp/dcf_upgrade.log
```

```
4.0K   2011-11-07 04:38:02  /tmp/perl_mark_upgrade.log
8.0K   2011-11-07 04:13:42  /tmp/install_dcf_rpm.log
4.0K   2011-11-07 04:13:06  /tmp/00_cleanup.sh.1320667986.log
0      2011-11-07 04:13:06  /tmp/ccif_patch_4410_4450.sh.1320667986.log
4.0K   2011-11-07 04:13:06  /tmp/dcf-tools.sh.1320667986.log
0      2011-11-07 04:13:06  /tmp/initial.sh.1320667986.log
0      2011-11-07 04:13:06  /tmp/inventory.sh.1320667986.log
4.0K   2011-11-07 04:13:06  /tmp/qf-db.sh.1320667986.log
4.0K   2011-11-07 04:13:06  /tmp/sfc.sh.1320667986.log
8.0K   2011-11-07 04:13:05  /tmp/jinstall-qfabric.log
8.0K   2011-11-04 11:10:24  /tmp/mgd-init.1320430192.log
4.0K   2011-11-04 11:07:03  /tmp/mysql_dcf_db_install.log
8.0K   2011-11-04 10:55:07  /tmp/ccif_patch_4410_4450.sh.1320429307.log
8.0K   2011-11-04 10:55:07  /tmp/initial.sh.1320429307.log
4.0K   2011-11-04 10:55:07  /tmp/inventory.sh.1320429307.log
8.0K   2011-11-04 10:55:07  /tmp/sfc.sh.1320429307.log
4.0K   2011-11-04 10:54:09  /tmp/ks-script-Ax0tz5.log
4.0K   2011-11-07 04:13:06  /tmp//sfc.sh.1320667986.log
8.0K   2011-11-04 10:55:07  /tmp//sfc.sh.1320429307.log

Directory to delete:
45M    2011-11-08 10:57:43  /tmp/sfc-captures

List of files to delete:

         Size Date         Name
4.0K   2011-11-08 05:47:47  /tmp/5713.sfcauth
4.0K   2011-11-08 05:14:32  /tmp/14494.sfcauth
4.0K   2011-11-08 05:11:47  /tmp/9978.sfcauth
4.0K   2011-11-08 05:09:37  /tmp/6128.sfcauth
4.0K   2011-11-08 05:04:28  /tmp/29703.sfcauth
4.0K   2011-11-07 11:59:10  /tmp/7811.sfcauth
4.0K   2011-11-07 11:36:08  /tmp/32415.sfcauth
4.0K   2011-11-07 11:30:30  /tmp/22406.sfcauth
4.0K   2011-11-07 11:24:37  /tmp/12131.sfcauth
4.0K   2011-11-07 10:48:42  /tmp/12687.sfcauth
4.0K   2011-11-07 09:27:20  /tmp/31082.sfcauth
4.0K   2011-11-07 07:33:58  /tmp/14633.sfcauth
4.0K   2011-11-07 05:08:25  /tmp/15447.sfcauth
4.0K   2011-11-07 04:12:29  /tmp/26874.sfcauth
4.0K   2011-11-07 04:12:27  /tmp/26713.sfcauth
4.0K   2011-11-07 03:49:17  /tmp/17691.sfcauth
4.0K   2011-11-05 01:32:23  /tmp/5716.sfcauth
4.0K   2011-11-07 08:00:17  /tmp/sfcsnmpd.log
4.0K   2011-11-07 07:57:50  /tmp/cluster_cleanup.log
824K   2011-11-07 07:38:37  /tmp/cn_monitor.20111107-053643.log
4.0K   2011-11-07 07:36:30  /tmp/clustat.18399.log
4.0K   2011-11-07 07:36:30  /tmp/clustat_x.18399.log
4.0K   2011-11-07 07:35:47  /tmp/command_lock.log
4.0K   2011-11-07 05:39:54  /tmp/mgd-init.1320673194.log
92K    2011-11-07 05:19:25  /tmp/cn_monitor.20111107-050412.log
4.0K   2011-11-07 05:17:20  /tmp/clustat.30115.log
4.0K   2011-11-07 05:17:20  /tmp/clustat_x.30115.log
8.0K   2011-11-07 05:08:07  /tmp/mgd-init.1320671241.log
4.0K   2011-11-07 05:04:57  /tmp/cn_send.log
0      2011-11-07 05:04:52  /tmp/init_eth0.log
4.0K   2011-11-07 05:02:38  /tmp/install_interfaces.sh.log
4.0K   2011-11-07 05:01:19  /tmp/bootstrap.sh.log
160K   2011-11-07 05:00:47  /tmp/bootstrap_cleanup.log
28M    2011-11-07 04:42:27  /tmp/cn_monitor.20111104-112954.log
4.0K   2011-11-07 04:38:49  /tmp/clustat.6780.log
```

```
4.0K   2011-11-07 04:38:49  /tmp/clustat_x.6780.log
4.0K   2011-11-07 04:38:05  /tmp/issue_event.log
4.0K   2011-11-07 04:38:05  /tmp/peer_upgrade_reboot.log
12K    2011-11-07 04:38:05  /tmp/primary_update.log
4.0K   2011-11-07 04:38:04  /tmp/dcf_upgrade.sh.remove.log
4.0K   2011-11-07 04:38:04  /tmp/peer_rexec_upgrade.log
4.0K   2011-11-07 04:13:42  /tmp/peer_install_dcf_rpm.log
4.0K   2011-11-07 04:11:57  /tmp/dcf-tools.sh.1320667917.log
0      2011-11-07 04:11:57  /tmp/initial.sh.1320667917.log
0      2011-11-07 04:11:57  /tmp/inventory.sh.1320667917.log
4.0K   2011-11-07 04:11:57  /tmp/qf-db.sh.1320667917.log
4.0K   2011-11-07 04:11:57  /tmp/sfc.sh.1320667917.log
4.0K   2011-11-07 04:11:56  /tmp/00_cleanup.sh.1320667916.log
0      2011-11-07 04:11:56  /tmp/ccif_patch_4410_4450.sh.1320667916.log
8.0K   2011-11-07 04:11:56  /tmp/jinstall-qfabric.log
4.0K   2011-11-07 04:11:33  /tmp/dcf_upgrade.log
8.0K   2011-11-04 11:53:12  /tmp/mgd-init.1320432782.log
8.0K   2011-11-04 11:06:17  /tmp/ccif_patch_4410_4450.sh.1320429977.log
8.0K   2011-11-04 11:06:17  /tmp/initial.sh.1320429977.log
4.0K   2011-11-04 11:06:17  /tmp/inventory.sh.1320429977.log
8.0K   2011-11-04 11:06:17  /tmp/sfc.sh.1320429977.log
4.0K   2011-11-04 11:05:19  /tmp/ks-script-_tnWeb.log
4.0K   2011-11-07 04:11:57  /tmp//sfc.sh.1320667917.log
8.0K   2011-11-04 11:06:17  /tmp//sfc.sh.1320429977.log

Directory to delete:
49M    2011-11-08 10:45:20  /tmp/sfc-captures
```

request system storage cleanup infrastructure device-name (QFabric Systems)

```
user@switch> request system storage cleanup infrastructure FC
re0:
--------------------------------------------------------------------------

List of files to delete:

         Size Date         Name
   139B Nov  8 19:03 /var/log/default-log-messages.0.gz
  5602B Nov  8 19:03 /var/log/messages.0.gz
  28.4K Nov  8 10:15 /var/log/messages.1.gz
  35.2K Nov  7 13:45 /var/log/messages.2.gz
   207B Nov  7 16:02 /var/log/wtmp.0.gz
    27B Nov  7 12:14 /var/log/wtmp.1.gz
 184.4M Nov  7 12:16
/var/sw/pkg/jinstall-dc-re-11.3I20111104_1216_dc-builder-domestic-signed.tgz
 124.0K Nov  7 15:59 /var/tmp/gres-tp/env.dat
     0B Nov  7 12:57 /var/tmp/gres-tp/lock
   155B Nov  7 16:02 /var/tmp/krt_gencfg_filter.txt
     0B Nov  7 12:35 /var/tmp/last_ccif_update
  1217B Nov  7 12:15 /var/tmp/loader.conf.preinstall
 184.4M Nov  6 07:11 /var/tmp/mchassis-install.tgz
  10.8M Nov  7 12:16
/var/tmp/preinstall/bootstrap-install-11.3I20111104_1216_dc-builder.tar
  57.4K Nov  7 12:16 /var/tmp/preinstall/configs-11.3I20111104_1216_dc-builder.tgz

   259B Nov  7 12:16 /var/tmp/preinstall/install.conf
 734.3K Nov  4 13:46
/var/tmp/preinstall/jboot-dc-re-11.3I20111104_1216_dc-builder.tgz
 177.8M Nov  7 12:16
/var/tmp/preinstall/jbundle-dc-re-11.3I20111104_1216_dc-builder-domestic.tgz
   124B Nov  7 12:15 /var/tmp/preinstall/metatags
```

```
  1217B Nov  7 12:16 /var/tmp/preinstall_boot_loader.conf
     0B Nov  7 16:02 /var/tmp/rtsdb/if-rtsdb
```

request system storage cleanup interconnect-device device-name (QFabric Systems)

```
user@switch> request system storage cleanup interconnect IC
re1:
--------------------------------------------------------------------------

List of files to delete:

         Size Date         Name
    11B Nov  7 15:55 /var/jail/tmp/alarmd.ts
   128B Nov  8 19:06 /var/log/default-log-messages.0.gz
  9965B Nov  8 19:06 /var/log/messages.0.gz
  15.8K Nov  8 12:30 /var/log/messages.1.gz
  15.8K Nov  8 11:00 /var/log/messages.2.gz
  15.7K Nov  8 07:30 /var/log/messages.3.gz
  15.8K Nov  8 04:00 /var/log/messages.4.gz
  15.7K Nov  8 00:30 /var/log/messages.5.gz
  18.7K Nov  7 21:00 /var/log/messages.6.gz
  17.6K Nov  7 19:00 /var/log/messages.7.gz
  58.3K Nov  7 16:00 /var/log/messages.8.gz
  20.3K Nov  7 15:15 /var/log/messages.9.gz
    90B Nov  7 15:41 /var/log/wtmp.0.gz
    57B Nov  7 12:41 /var/log/wtmp.1.gz
 124.0K Nov  7 15:42 /var/tmp/gres-tp/env.dat
     0B Nov  7 12:40 /var/tmp/gres-tp/lock
     0B Nov  7 12:41 /var/tmp/if-rtsdb/env.lck
  12.0K Nov  7 15:41 /var/tmp/if-rtsdb/env.mem
 132.0K Nov  7 15:55 /var/tmp/if-rtsdb/shm_usr1.mem
2688.0K Nov  7 15:41 /var/tmp/if-rtsdb/shm_usr2.mem
2048.0K Nov  7 15:41 /var/tmp/if-rtsdb/trace.mem
   730B Nov  7 19:57 /var/tmp/juniper.conf+.gz
   155B Nov  7 15:53 /var/tmp/krt_gencfg_filter.txt
     0B Nov  7 15:41 /var/tmp/rtsdb/if-rtsdb

re0:
--------------------------------------------------------------------------

List of files to delete:

         Size Date         Name
    11B Nov  7 15:55 /var/jail/tmp/alarmd.ts
   121B Nov  8 19:06 /var/log/default-log-messages.0.gz
  16.7K Nov  8 19:06 /var/log/messages.0.gz
  22.2K Nov  8 17:45 /var/log/messages.1.gz
  18.4K Nov  8 17:00 /var/log/messages.2.gz
  21.6K Nov  8 16:00 /var/log/messages.3.gz
  17.9K Nov  8 14:30 /var/log/messages.4.gz
  19.4K Nov  8 13:30 /var/log/messages.5.gz
  18.2K Nov  8 12:30 /var/log/messages.6.gz
  20.4K Nov  8 11:30 /var/log/messages.7.gz
  21.4K Nov  8 10:15 /var/log/messages.8.gz
  21.0K Nov  8 09:00 /var/log/messages.9.gz
  19.9K Nov  8 08:13 /var/log/snmp-traps.0.gz
   203B Nov  8 15:36 /var/log/wtmp.0.gz
    57B Nov  7 12:41 /var/log/wtmp.1.gz
 124.0K Nov  7 15:42 /var/tmp/gres-tp/env.dat
     0B Nov  7 12:40 /var/tmp/gres-tp/lock
     0B Nov  7 12:41 /var/tmp/if-rtsdb/env.lck
```



```
  12.0K Nov  7 15:41 /var/tmp/if-rtsdb/env.mem
 132.0K Nov  7 15:55 /var/tmp/if-rtsdb/shm_usr1.mem
2688.0K Nov  7 15:41 /var/tmp/if-rtsdb/shm_usr2.mem
2048.0K Nov  7 15:41 /var/tmp/if-rtsdb/trace.mem
   727B Nov  7 15:54 /var/tmp/juniper.conf+.gz
   155B Nov  7 15:55 /var/tmp/krt_gencfg_filter.txt
     0B Nov  7 15:41 /var/tmp/rtsdb/if-rtsdb
```

request system storage cleanup node-group group-name (QFabric Systems)

```
user@switch> request system storage cleanup node-group NW-NG
BBAK0372:
--------------------------------------------------------------------------

List of files to delete:

         Size Date         Name
   126B Nov  8 19:07 /var/log/default-log-messages.0.gz
   179B Nov  7 13:32 /var/log/install.0.gz
  22.9K Nov  8 19:07 /var/log/messages.0.gz
  26.5K Nov  8 17:30 /var/log/messages.1.gz
  20.5K Nov  8 13:15 /var/log/messages.2.gz
  33.2K Nov  7 17:45 /var/log/messages.3.gz
  35.5K Nov  7 15:45 /var/log/messages.4.gz
   339B Nov  8 17:10 /var/log/wtmp.0.gz
    58B Nov  7 12:40 /var/log/wtmp.1.gz
 124.0K Nov  8 17:08 /var/tmp/gres-tp/env.dat
     0B Nov  7 12:39 /var/tmp/gres-tp/lock
     0B Nov  7 12:59 /var/tmp/if-rtsdb/env.lck
  12.0K Nov  8 17:09 /var/tmp/if-rtsdb/env.mem
2688.0K Nov  8 17:09 /var/tmp/if-rtsdb/shm_usr1.mem
 132.0K Nov  8 17:09 /var/tmp/if-rtsdb/shm_usr2.mem
2048.0K Nov  8 17:09 /var/tmp/if-rtsdb/trace.mem
  1082B Nov  8 17:09 /var/tmp/juniper.conf+.gz
   155B Nov  7 17:39 /var/tmp/krt_gencfg_filter.txt
     0B Nov  8 17:09 /var/tmp/rtsdb/if-rtsdb

EE3093:
--------------------------------------------------------------------------

List of files to delete:

         Size Date         Name
    11B Nov  8 17:33 /var/jail/tmp/alarmd.ts
   119B Nov  8 19:08 /var/log/default-log-messages.0.gz
   180B Nov  7 17:41 /var/log/install.0.gz
   178B Nov  7 13:32 /var/log/install.1.gz
  2739B Nov  8 19:08 /var/log/messages.0.gz
  29.8K Nov  8 18:45 /var/log/messages.1.gz
  31.8K Nov  8 17:15 /var/log/messages.2.gz
  20.6K Nov  8 16:00 /var/log/messages.3.gz
  15.4K Nov  8 10:15 /var/log/messages.4.gz
  15.4K Nov  8 02:15 /var/log/messages.5.gz
  25.5K Nov  7 20:45 /var/log/messages.6.gz
  48.0K Nov  7 17:45 /var/log/messages.7.gz
  32.8K Nov  7 13:45 /var/log/messages.8.gz
   684B Nov  8 17:02 /var/log/wtmp.0.gz
    58B Nov  7 12:40 /var/log/wtmp.1.gz
 124.0K Nov  7 17:34 /var/tmp/gres-tp/env.dat
     0B Nov  7 12:40 /var/tmp/gres-tp/lock
     0B Nov  7 12:59 /var/tmp/if-rtsdb/env.lck
```

```
  12.0K Nov  7 17:39 /var/tmp/if-rtsdb/env.mem
2688.0K Nov  7 17:39 /var/tmp/if-rtsdb/shm_usr1.mem
 132.0K Nov  7 17:40 /var/tmp/if-rtsdb/shm_usr2.mem
2048.0K Nov  7 17:39 /var/tmp/if-rtsdb/trace.mem
   155B Nov  7 17:40 /var/tmp/krt_gencfg_filter.txt
     0B Nov  7 17:39 /var/tmp/rtsdb/if-rtsdb
```

request system storage cleanup qfabric component device-name (QFabric Systems)

```
user@switch> request system storage cleanup qfabric component Test
Repository type: regular
Repository head: /pbstorage
Creating list of debug artifacts to be removed under: /pbstorage/rdumps/Test
Removing debug artifacts ... (press control C to abort)
Removing /pbstorage/rdumps/Test/cosd.core.0.0.05162011123308.gz ... done
Removing /pbstorage/rdumps/Test/cosd.core.1.0.05162011123614.gz ... done
Removing /pbstorage/rdumps/Test/cosd.core.2.0.05162011123920.gz ... done
Removing /pbstorage/rdumps/Test/livekcore.05132011163930.gz ... done
Removing /pbstorage/rdumps/Test/tnetd.core.0.1057.05162011124500.gz ... done
Removing /pbstorage/rdumps/Test/vmcore.05132011120528.gz ... done
Removing /pbstorage/rdumps/Test/vmcore.kz ... done
Creating list of debug artifacts to be removed under: /pbstorage/rlogs/Test
Removing debug artifacts ... (press control C to abort)
Removing /pbstorage/rlogs/Test/kdumpinfo.05132011120528 ... done
Removing /pbstorage/rlogs/Test/kernel.tarball.0.1039.05122011234415.tgz ... done
Removing /pbstorage/rlogs/Test/kernel.tarball.1.1039.05132011175544.tgz ... done
Removing /pbstorage/rlogs/Test/tnetd.tarball.0.1057.05162011175453.tgz ... done
```

request system storage cleanup qfabric component device-name repository core (QFabric Systems)

```
user@switch> request system storage cleanup qfabric component Test repository core
Repository scope: shared
Repository head: /pbdata/export
Repository name: core
Creating list of debug artifacts to be removed under: /pbdata/export/rdumps/Test
NOTE: core repository under /pbdata/export/rdumps/Test empty
```

request system storage cleanup qfabric component all (QFabric Systems)

```
user@switch> request system storage cleanup qfabric component all
Repository scope: shared
Repository head: /pbdata/export
Creating list of debug artifacts to be removed under: /pbdata/export/rdumps
NOTE: core repository under /pbdata/export/rdumps/all empty
Creating list of debug artifacts to be removed under: /pbdata/export/rlogs
List of debug artifacts to clean up ... (press control C to abort)
/pbdata/export/rlogs/73747cd8-0710-11e1-b6a4-00e081c5297e/install-11072011125819.log
/pbdata/export/rlogs/77116f18-0710-11e1-a2a0-00e081c5297e/install-11072011125819.log
/pbdata/export/rlogs/BBAK0372/install-11072011121538.log
/pbdata/export/rlogs/BBAK0394/install-11072011121532.log
/pbdata/export/rlogs/EE3093/install-11072011121536.log
/pbdata/export/rlogs/WS001/YN5999/install-11072011121644.log
/pbdata/export/rlogs/WS001/YW3803/install-11072011122429.log
/pbdata/export/rlogs/cd78871a-0710-11e1-878e-00e081c5297e/install-11072011125932.log
/pbdata/export/rlogs/d0afda1e-0710-11e1-a1d0-00e081c5297e/install-11072011125930.log
/pbdata/export/rlogs/d0afda1e-0710-11e1-a1d0-00e081c5297e/install-11072011133211.log
/pbdata/export/rlogs/d0afda1e-0710-11e1-a1d0-00e081c5297e/install-11072011155302.log
/pbdata/export/rlogs/d31ab7a6-0710-11e1-ad1b-00e081c5297e/install-11072011125931.log
/pbdata/export/rlogs/d4d0f254-0710-11e1-90c3-00e081c5297e/install-11072011125932.log
```

request system storage user-disk

Syntax

request system storage user-disk
<expand>
<restore>

Release Information

Command introduced in Junos OS Release 17.2 for Junos Fusion Data Center.

Description

Expand or restore the size of the /user disk partition for an aggregation device on Junos Fusion Data Center. The /user partition must be expanded to provide sufficient space on the aggregation device for installing satellite packages.

After the command is issued, you are prompted to confirm the action. The system is automatically rebooted to affect the change. The disk partition space is preserved across subsequent reboot and Junos OS upgrades.

Options

expand—Increases the size of the /user disk partition to 4G and creates a soft link from the /var/home/ partition to the /user partition. The /var/home partition is where satellite packages are stored on the aggregation device when they are installed. The /user partition must be expanded before installing satellite software packages on the aggregation device.

restore—Restores the /user partition to its original size and removes the link between the /user partition and the /var/home partition. The restore option should only be used when the device is no longer being used as an aggregation device.

Required Privilege Level

maintenance

Related Documentation

- Configuring or Expanding a Junos Fusion Data Center on page 47

List of Sample Output

Sample Output

request system storage user-disk expand

```
user@aggregation-device> request system storage user-disk expand
This command will change the size of /user and reboot the system
Do you want to continue? [yes,no] (no) yes

Proceeding with expand operation
Platform disk size changed to 4096M
Making link from /var/home to /user
Initiating reboot to complete the operation
Shutdown at Thu Apr 13 00:00:48 2017.

*** System shutdown message from root@aggregation-device ***
```

```
System going down in 1 minute
```

request system storage user-disk restore

```
user@aggregation-device> request system storage user-disk restore
This command will change the size of /user and reboot the system
Do you want to continue? [yes,no] (no) yes

Proceeding with restore operation
Platform disk size changed to default
Initiating reboot to complete the operation
Shutdown at Wed Apr 12 23:53:58 2017.

*** System shutdown message from root@aggregation-device ***

System going down in 1 minute
```

show chassis alarms

List of Syntax

Syntax

show chassis alarms

Syntax (TX Matrix Routers)

show chassis alarms
<lcc *number* | scc>

Syntax (TX Matrix Plus Routers)

show chassis alarms
<lcc *number* | sfc *number*>

Syntax (MX Series Routers)

show chassis alarms
<all-members>
<local>
<member *member-id*>

Syntax (MX104, MX2010, MX2020, and MX2008 Universal Routing Platforms)

show chassis alarms
<satellite [slot-id *slot-id*]>

Syntax (MX10003, MX204, and MX10008)

show chassis alarms

Syntax (QFX Series)

show chassis alarms
<interconnect-device *name*>
<node-device *name*>

Syntax (OCX Series)

show chassis alarms

Syntax (PTX Series Packet Transport Routers)

show chassis alarms

Syntax (ACX Series Universal Metro Routers)

show chassis alarms

Syntax (EX9251, EX9253 Switches)

show chassis alarms

Release Information

Command introduced before Junos OS Release 7.4.
Command introduced in Junos OS Release 9.0 for EX Series switches.
sfc option introduced in Junos OS Release 9.6 for the TX Matrix Plus router.
Command introduced in Junos OS Release 11.1 for the QFX Series.
Command introduced in Junos OS Release 12.1 for the PTX Series Packet Transport Routers.
Command introduced in Junos OS Release 12.2 for the ACX Series Universal Metro Routers.
Command introduced in Junos OS Release 12.3 for MX 2010 and MX2020 Universal Routing Platforms.
Command introduced in Junos OS Release 13.2 for MX104 Universal Routing Platforms.
Command introduced in Junos OS Release 14.1X53-D20 for the OCX Series.
satellite option introduced in Junos OS Release 14.2R3 for Junos Fusion.
Command introduced in Junos OS Release 17.2 for MX2008 Universal Routing Platforms.
Command introduced in Junos OS Release 17.2 for PTX10008 Routers.
Command introduced in Junos OS Release 17.3 for MX150 Router Appliance.
Command introduced in Junos OS Release 17.3 for MX10003 Universal Routing Platforms.
Command introduced in Junos OS Release 17.4 for MX204 Universal Routing Platforms.
Command introduced in Junos OS Release 18.1R1 for EX9251 Switches.
Command introduced in Junos OS Release 18.2 for EX9253 Switches.
Command introduced in Junos OS Release 18.2R1 for MX10008 Universal Routing Platforms.

Description

Display information about the conditions that have been configured to trigger alarms.

Options

none—Display information about the conditions that have been configured to trigger alarms.

all-members—(MX Series routers only) (Optional) Display information about alarm conditions for all the member routers of the Virtual Chassis configuration.

interconnect-device *name*—(QFabric systems only) (Optional) Display information about alarm conditions for the Interconnect device.

lcc *number*—(TX Matrix router and TX Matrix Plus router only) (Optional) Line-card chassis number.

Replace *number* with the following values depending on the LCC configuration:

- 0 through 3, when T640 routers are connected to a TX Matrix router in a routing matrix.
- 0 through 3, when T1600 routers are connected to a TX Matrix Plus router in a routing matrix.

- 0 through 7, when T1600 routers are connected to a TX Matrix Plus router with 3D SIBs in a routing matrix.
- 0, 2, 4, or 6, when T4000 routers are connected to a TX Matrix Plus router with 3D SIBs in a routing matrix.

local—(MX Series routers only) (Optional) Display information about alarm conditions for the local Virtual Chassis member.

member *member-id*—(MX Series routers only) (Optional) Display information about alarm conditions for the specified member of the Virtual Chassis configuration. Replace *member-id* variable with a value of 0 or 1.

node-device *name*—(QFabric systems only) (Optional) Display information about alarm conditions for the Node device.

satellite [slot-id *slot-id*]—(Junos Fusion only)(Optional) Display information about alarm conditions for the specified satellite device in a Junos Fusion, or for all satellite devices in the Junos Fusion if no satellite devices are specified.

scc—(TX Matrix router only) (Optional) Show information about the TX Matrix router (switch-card chassis).

sfc *number*—(TX Matrix Plus router only) (Optional) Show information about the respective TX Matrix Plus router, which is the switch-fabric chassis. Replace *number* variable with **0**.

Additional Information

Chassis alarms are preset. You cannot modify them.

You cannot clear the alarms for chassis components. Instead, you must remedy the cause of the alarm. When a chassis alarm LED is lit, it indicates that you are running the router or switch in a manner that we do not recommend.

On routers, you can manually silence external devices connected to the alarm relay contacts by pressing the alarm cutoff button, located on the craft interface. Silencing the device does not remove the alarm messages from the display (if present on the router) or extinguish the alarm LEDs. In addition, new alarms that occur after you silence an external device reactivate the external device.

NOTE: **MX10003 routers do not support craft interface.**

In Junos OS release 11.1 and later, alarms for fans also show the slot number of the fans in the CLI output.

In Junos OS Release 11.2 and later, the command output on EX8200 switches shows the detailed location (**Plane/FPC/PFE**) for link errors in the chassis.

In Junos OS Release 10.2 and later, an alarm is shown on T Series routers for a standby SONET Clock Generator (SCG) that is offline or absent.

You may often see the following error messages, in which only the error code is shown and no other information is provided:

```
Apr 12 08:04:10 send: red alarm set, device FPC 6, reason FPC 6 Major Errors
 - Error code: 257
Apr 12 08:04:19 send: red alarm set, device FPC 1, reason FPC 1 Major Errors
 - Error code: 559
```

To understand what CM_ALARM error codes mean, you need to first identify the structure of the CM Alarm codes. A CM_ALARM code has the following structure:

Bits:	Error type:
1-31	Major (1)
0	Minor (0)

According to the table above, the LSB (bit 0) identifies the **Error Type** (major alarm, if the bit is set and minor alarm if the bit is unset). The rest of the bits (1 - 31) identify the actual error code.

Take an example of the following error code, which was logged on a T1600:

```
Apr 12 08:04:10 send: red alarm set, device FPC 1, reason FPC 1 Major Errors
 - Error code: 559
```

First, you have to convert 559 to binary; that is **1000101111**. The LSB in this case is **1**, which means that this is a major alarm. After removing the LSB, you are left with **100010111**, which is equal to 279 in decimal. This is the actual error code, its meaning can be found from the following list:

Chip Type: L Chip	Code
CMALARM_LCHIP_LOUT_DESRD_PARITY_ERR	1
CMALARM_LCHIP_LOUT_DESRD_UNINIT_ERR	2
CMALARM_LCHIP_LOUT_DESRD_ILLEGALLINK_ERR	3
CMALARM_LCHIP_LOUT_DESRD_ILLEGALSIZE_ERR	4
CMALARM_LCHIP_LOUT_HDRF_TOERR_ERR	5
CMALARM_LCHIP_LOUT_HDRF_PARITY_ERR	6
CMALARM_LCHIP_LOUT_HDRF_UCERR_ERR	7
CMALARM_LCHIP_LOUT_NLIF_CRCDROP_ERR	8
CMALARM_LCHIP_LOUT_NLIF_CRCERR_ERR	9

CMALARM_LCHIP_UCODE_TIMEOUT_ERR	10
CMALARM_LCHIP_LIN_SRCTL_ACCT_DROP_ERR	11
CMALARM_LCHIP_LIN_SRCTL_ACCT_ADDR_SIZE_ERR	12
CMALARM_LCHIP_SRAM_PARITY_ERR	13
CMALARM_LCHIP_UCODE_OVFLW_ERR	14
CMALARM_LCHIP_LOUT_HDRF_MTU_ERR	15

Chip Type: M Chip	Code
CMALARM_MCHIP_ECC_UNCORRECT_ERR	128

Chip Type: N Chip	Code
CMALARM_NCHIP_RDDMA_JBUS_TIMEOUT_ERR	256
CMALARM_NCHIP_RDDMA_FIFO_OVFLW_ERR	257
CMALARM_NCHIP_RDDMA_FIFO_UNFLW_ERR	258
CMALARM_NCHIP_RDDMA_SIZE_ERR	259
CMALARM_NCHIP_RDDMA_JBUS_CRC_ERR	260
CMALARM_NCHIP_WRDMA_PKTR_ERR	261
CMALARM_NCHIP_WRDMA_PKT_CRC_ERR	262
CMALARM_NCHIP_WRDMA_JBUS_TIMEOUT_ERR	263
CMALARM_NCHIP_WRDMA_FIFO_OVFLW_ERR	264
CMALARM_NCHIP_WRDMA_FIFO_UNFLW_ERR	265
CMALARM_NCHIP_WRDMA_PKT_LEN_ERR	266
CMALARM_NCHIP_WRDMA_JBUS_CRC_ERR	267
CMALARM_NCHIP_PKTR_DMA_AGE_ERR	268
CMALARM_NCHIP_PKTR_ICELLSIG_ERR	269
CMALARM_NCHIP_PKTR_FTTL_ERR	270
CMALARM_NCHIP_RODR_OFFSET_OVFLW_ERR	271

CMALARM_NCHIP_PKTR_TMO_CELL_ERR	272
CMALARM_NCHIP_PKTR_TMO_OUTRANGE_ERR	273
CMALARM_NCHIP_PKTR_MD_REQUEST_Q_OVFLW_ERR	274
CMALARM_NCHIP_PKTR_DMA_BUFFER_OVFLW_ERR	275
CMALARM_NCHIP_PKTR_GRT_OVFLW_ERR	276
CMALARM_NCHIP_FRQ_ERR	277
CMALARM_NCHIP_RODR_IN_Q_OVFLW_ERR	278
CMALARM_NCHIP_DBUF_CRC_ERR	279

Chip Type: R Chip	Code
CMALARM_RCHIP_SRAM_PARITY_ERR	512

Chip Type: R Chip	Code
CMALARM_ICHIP_WO_DESRD_ID_ERR	601
CMALARM_ICHIP_WO_DESRD_DATA_ERR	602
CMALARM_ICHIP_WO_DESRD_OFLOW_ERR	603
CMALARM_ICHIP_WO_HDRF_UCERR_ERR	604
CMALARM_ICHIP_WO_HDRF_MTUERR_ERR	605
CMALARM_ICHIP_WO_HDRF_PARITY_ERR	606
CMALARM_ICHIP_WO_HDRF_TOERR_ERR	607
CMALARM_ICHIP_WO_IP_CRC_ERR	608
CMALARM_ICHIP_WO_IP_INTER_ERR	609
CMALARM_ICHIP_WI_WAN_TIMEOUT_ERR	625
CMALARM_ICHIP_WI_FAB_TIMEOUT_ERR	626
CMALARM_ICHIP_RLDRAM_BIST_ERR	630
CMALARM_ICHIP_SDRAM_BIST_ERR	631
CMALARM_ICHIP_RLDRAM_PARITY_ERR	632

CMALARM_ICHIP_SDRAM_UNCORRECT_ERR	633
CMALARM_ICHIP_SDRAM_CORRECT_ERR	634
CMALARM_ICHIP_FUSE_DONE_ERR	635

According to the table above, the **279** error code corresponds to **CMALARM_NCHIP_DBUF_CRC_ERR**; this means that new CRC errors were seen on the NCHIP of this particular FPC, which is FPC as per the logs.

If you do not want to convert decimal to binary and vice versa, you may use the following shortcut:

For major alarms, the **Actual Error Code = (Error Code - 1)/2**, where **Error Code** is the code that you get in the log message. For example, if you get the following log:

```
    Apr 12 08:04:10 send: red alarm set, device FPC 6, reason FPC 6 Major
Errors - Error code: 257
```

Actual Error Code = (257-1)/2 = 128. Similarly, for minor alarms, Actual Error Code = (Error Code)/2

NOTE: Starting in Junos OS Release 18.2R1, on MX Series routers, the **show chassis alarms** output does not display error codes for PFE-related errors. You can use the following commands to view more details of the errors that caused the alarms:

- **show chassis errors active**
- **show chassis errors active detail**

Required Privilege Level view

Related Documentation
- *Configuring an RMON Alarm Entry and Its Attributes*
- *Chassis Conditions That Trigger Alarms*

List of Sample Output

Output Fields

Table 9 on page 193 lists the output fields for the **show chassis alarms** command. Output fields are listed in the approximate order in which they appear.

Table 9: show chassis alarms Output Fields

Field Name	Field Description
Alarm time	Date and time the alarm was first recorded.
Class	Severity class for this alarm: **Minor** or **Major**.

Table 9: show chassis alarms Output Fields (continued)

Field Name	Field Description
Description	Information about the alarm.

Sample Output

show chassis alarms (Alarms Active)

```
user@host> show chassis alarms
3 alarms are currently active
Alarm time               Class  Description
2000-02-07 10:12:22 UTC Major fxp0: ethernet link down
2000-02-07 10:11:54 UTC Minor YELLOW ALARM - PEM 1 Removed
2000-02-07 10:11:03 UTC Minor YELLOW ALARM - Lower Fan Tray Removed
```

show chassis alarms (No Alarms Active)

```
user@host> show chassis alarms
No alarms are currently active
```

show chassis alarms (Fan Tray)

```
user@host> show chassis alarms
4 alarms currently active
Alarm time               Class  Description
2010-11-11 20:27:38 UTC  Major  Side Fan Tray 7 Failure
2010-11-11 20:27:13 UTC  Minor  Side Fan Tray 7 Overspeed
2010-11-11 20:27:13 UTC  Major  Side Fan Tray 5 Failure
2010-11-11 20:27:13 UTC  Major  Side Fan Tray 0 Failure
```

show chassis alarms (MX150)

```
user@host > show chassis alarms
1 alarms currently active
Alarm time               Class  Description
2016-06-04 01:49:43 PDT  Major  Fan Tray 1 Fan 0 failed
```

show chassis alarms (MX104 Router)

```
user@host >show chassis alarms
1 alarms currently active
Alarm time               Class  Description
2013-06-05 14:43:31 IST  Minor  Backup RE Active
```

show chassis alarms (MX2010 Router)

```
user@host> show chassis alarms
7 alarms currently active
Alarm time               Class  Description
2012-08-07 00:46:06 PDT  Major  Fan Tray 2 Failure
2012-08-06 18:24:36 PDT  Minor  Redundant feed missing for PSM 6
2012-08-06 07:41:04 PDT  Minor  Redundant feed missing for PSM 8
2012-08-04 02:42:06 PDT  Minor  Redundant feed missing for PSM 5
2012-08-03 21:14:24 PDT  Minor  Loss of communication with Backup RE
```

```
2012-08-03 12:26:03 PDT  Minor  Redundant feed missing for PSM 4
2012-08-03 10:40:18 PDT  Minor  Redundant feed missing for PSM 7
```

show chassis alarms (MX2020 Router)

```
user@host> show chassis alarms
1 alarms currently active
Alarm time Class Description
2012-10-03 12:14:59 PDT Minor Plane 0 not online
```

show chassis alarms (MX10003 Router)

```
user@host> show chassis alarms

9 alarms currently active
Alarm time               Class  Description
2017-07-13 21:50:31 PDT  Major  FPC 1 Temperature Hot
2017-07-13 21:50:04 PDT  Minor  FPC 1 PIC 1 Invalid port profile configuration
2017-07-13 21:49:13 PDT  Minor  FPC 1 PIC 0 Invalid port profile configuration
2017-07-13 21:48:54 PDT  Major  FPC 0 Temperature Hot
2017-07-13 21:43:57 PDT  Minor  PEM 5 Not Present
2017-07-13 21:43:57 PDT  Minor  PEM 4 Not Present
2017-07-13 21:43:54 PDT  Minor  CB 1 Voltage Sensor ADS7830_0x4B Sensor Failed
2017-07-13 21:43:54 PDT  Minor  CB 0 Voltage Sensor ADS7830_0x4B Sensor Failed
2017-07-13 21:43:31 PDT  Minor  Loss of communication with Backup RE
```

show chassis alarms (MX204 Router)

```
user@host> show chassis alarms

1 alarms currently active
Alarm time               Class  Description
2017-11-05 22:13:03 PST  Major  PEM 0 Not Present
```

show chassis alarms (MX2008 Router)

```
user@host>show chassis alarms
No alarms currently active
```

show chassis alarms (MX960, MX480, and MX240 Routers showing Major CB Failure)

A major CB 0 failure alarm occurs in the event of a bad CB (unknown or mismatched CBs do not trigger this alarm in Junos Release OS 12.3R9 and later). Following GRES or recovery, if the hardware issue persists, the traffic moves to the good CB and continues. If the alarm was triggered by something transient like a power zone budget on GRES, bringing the CB back online can clear the alarm. Otherwise, replace the bad CB. Note that fabric link speed is not impacted by an offline SCB. The alarm migh be raised on CB0, CB1, and CB2.

```
user@host> show chassis alarms
6 alarms currently active
Alarm time               Class  Description
2014-10-31 16:49:41 EDT  Major  PEM 3 Not OK
2014-10-31 16:49:41 EDT  Major  PEM 2 Not OK
2014-10-31 16:49:31 EDT  Major  CB 0 Failure
2014-10-31 16:49:31 EDT  Minor  CB 0 Fabric Chip 0 Not Online
2014-10-31 16:49:31 EDT  Minor  CB 0 Fabric Chip 1 Not Online
2014-10-31 16:49:31 EDT  Minor  Backup RE Active
```

show chassis alarms (PTX10008 Router)

```
user@host>show chassis alarms
12 alarms currently active
Alarm time               Class  Description
2017-05-09 01:38:55 PDT  Minor  Loss of communication with Backup RE
2017-05-05 06:49:57 PDT  Major  FPC 5 LCPU Temp Sensor Access Failed
2017-05-05 06:49:57 PDT  Major  FPC 5 PE2 Temp Sensor Hot
2017-05-05 06:49:57 PDT  Major  FPC 5 PE1 Temp Sensor Hot
2017-05-05 06:49:57 PDT  Major  FPC 5 PE0 Temp Sensor Hot
2017-05-05 06:49:57 PDT  Major  FPC 5 Exhaust-C Temp Sensor Hot
2017-05-05 06:49:57 PDT  Major  FPC 5 Exhaust-B Temp Sensor Hot
2017-05-05 06:49:57 PDT  Major  FPC 5 Exhaust-A Temp Sensor Hot
2017-05-05 06:49:57 PDT  Major  FPC 5 Intake-B Temp Sensor Access Failed
2017-05-05 06:49:57 PDT  Major  FPC 5 Intake-A Temp Sensor Access Failed
2017-05-05 06:49:57 PDT  Major  Fan Tray 0 Fan 5 running at lower speed
2017-05-05 06:49:57 PDT  Major  Fan Tray 0 Fan 4 running at lower speed
```

show chassis alarms (T4000 Router)

```
user@host> show chassis alarms
9 alarms currently active
Alarm time               Class  Description
2007-06-02 01:41:10 UTC  Minor  RE 0 Not Supported
2007-06-02 01:41:10 UTC  Minor  CB 0 Not Supported
2007-06-02 01:41:10 UTC  Minor  Mixed Master and Backup RE types
2007-05-30 19:37:33 UTC  Major  SPMB 1 not online
2007-05-30 19:37:29 UTC  Minor  Front Bottom Fan Tray Absent
2007-05-30 19:37:13 UTC  Major  PEM 1 Input Failure
2007-05-30 19:37:13 UTC  Major  PEM 0 Not OK
2007-05-30 19:37:03 UTC  Major  PEM 0 Improper for Platform
2007-05-30 19:37:03 UTC  Minor  Backup RE Active
```

show chassis alarms (Unreachable Destinations Present on a T Series Router)

```
user@host> show chassis alarms
10 alarms currently active
Alarm time               Class  Description
2011-08-30 18:43:53 PDT  Major  FPC 7 has unreachable destinations
2011-08-30 18:43:53 PDT  Major  FPC 5 has unreachable destinations
2011-08-30 18:43:52 PDT  Major  FPC 3 has unreachable destinations
2011-08-30 18:43:52 PDT  Major  FPC 2 has unreachable destinations
2011-08-30 18:43:52 PDT  Minor  SIB 0 Not Online
2011-08-30 18:43:33 PDT  Minor  SIB 4 Not Online
2011-08-30 18:43:28 PDT  Minor  SIB 3 Not Online
2011-08-30 18:43:05 PDT  Minor  SIB 2 Not Online
2011-08-30 18:43:28 PDT  Minor  SIB 1 Not Online
2011-08-30 18:43:05 PDT  Major  PEM 1 Not Ok
```

show chassis alarms (FPC Offline Due to Unreachable Destinations on a T Series Router)

```
user@host> show chassis alarms
10 alarms currently active
Alarm time               Class  Description
2011-08-30 18:43:53 PDT  Major  FPC 7 offline due to unreachable destinations
2011-08-30 18:43:53 PDT  Major  FPC 5 offline due to unreachable destinations
2011-08-30 18:43:52 PDT  Major  FPC 3 offline due to unreachable destinations
2011-08-30 18:43:52 PDT  Major  FPC 2 offline due to unreachable destinations
2011-08-30 18:43:52 PDT  Minor  SIB 0 Not Online
```

```
2011-08-30 18:43:33 PDT  Minor  SIB 4 Not Online
2011-08-30 18:43:28 PDT  Minor  SIB 3 Not Online
2011-08-30 18:43:05 PDT  Minor  SIB 2 Not Online
2011-08-30 18:43:28 PDT  Minor  SIB 1 Not Online
2011-08-30 18:43:05 PDT  Major  PEM 1 Not Ok
```

show chassis alarms (SCG Absent on a T Series Router)

```
user@host> show chassis alarms
4 alarms currently active
Alarm time               Class  Description
2011-01-23 21:42:46 PST  Major  SCG 0 NO EXT CLK MEAS-BKUP SCG ABS
```

show chassis alarms (Alarms Active on a TX Matrix Router)

```
user@host> show chassis alarms
scc-re0:
--------------------------------------------------------------------------
8 alarms currently active
Alarm time               Class  Description
2004-08-05 18:43:53 PDT  Minor  LCC 0 Minor Errors
2004-08-05 18:43:53 PDT  Minor  SIB 3 Not Online
2004-08-05 18:43:52 PDT  Major  SIB 2 Absent
2004-08-05 18:43:52 PDT  Major  SIB 1 Absent
2004-08-05 18:43:52 PDT  Major  SIB 0 Absent
2004-08-05 18:43:33 PDT  Major  LCC 2 Major Errors
2004-08-05 18:43:28 PDT  Major  LCC 0 Major Errors
2004-08-05 18:43:05 PDT  Minor  LCC 2 Minor Errors
lcc0-re0:
--------------------------------------------------------------------------
5 alarms currently active
Alarm time               Class  Description
2004-08-05 18:43:53 PDT  Minor  SIB 3 Not Online
2004-08-05 18:43:49 PDT  Major  SIB 2 Absent
2004-08-05 18:43:49 PDT  Major  SIB 1 Absent
2004-08-05 18:43:49 PDT  Major  SIB 0 Absent
2004-08-05 18:43:28 PDT  Major  PEM 0 Not OK
lcc2-re0:
--------------------------------------------------------------------------
5 alarms currently active
Alarm time               Class  Description
2004-08-05 18:43:35 PDT  Minor  SIB 3 Not Online
2004-08-05 18:43:33 PDT  Major  SIB 2 Absent
2004-08-05 18:43:33 PDT  Major  SIB 1 Absent
2004-08-05 18:43:33 PDT  Major  SIB 0 Absent
2004-08-05 18:43:05 PDT  Minor  PEM 1 Absent
```

show chassis alarms (TX Matrix Plus router with 3D SIBs)

```
user@host> show chassis alarms
sfc0-re0:
--------------------------------------------------------------------------
Alarm time               Class  Description

2014-04-08 14:35:13 IST  Minor  FPM 0 SFC Config Size Changed
2014-04-08 14:32:58 IST  Major  Fan Tray Failure
2014-04-08 14:31:53 IST  Major  SIB F13 6 Fault
2014-04-08 14:31:43 IST  Major  SIB F13 11 Fault
2014-04-08 14:31:08 IST  Minor  Check SIB F13 12 CXP 14 Fbr Cbl
2014-04-08 14:31:08 IST  Minor  Check SIB F13 12 CXP 8 Fbr Cbl
```

```
2014-04-08 14:31:08 IST  Minor  Check SIB F13 12 CXP 3 Fbr Cbl
2014-04-08 14:31:08 IST  Major  SIB F13 12 CXP 15 fault
2014-04-08 14:31:08 IST  Minor  SIB F13 12 CXP 14 LOL
2014-04-08 14:31:08 IST  Minor  Check SIB F13 12 CXP 14
2014-04-08 14:31:08 IST  Major  SIB F13 12 CXP 10 fault
2014-04-08 14:31:08 IST  Minor  SIB F13 12 CXP 8 LOL
2014-04-08 14:31:08 IST  Minor  Check SIB F13 12 CXP 8
2014-04-08 14:31:08 IST  Major  SIB F13 12 CXP 7 fault
2014-04-08 14:31:08 IST  Major  SIB F13 12 CXP 4 fault
2014-04-08 14:31:08 IST  Minor  SIB F13 12 CXP 3 LOL
2014-04-08 14:31:08 IST  Minor  Check SIB F13 12 CXP 3
2014-04-08 14:31:08 IST  Minor  Check SIB F13 6 CXP 14 Fbr Cbl
2014-04-08 14:31:08 IST  Minor  Check SIB F13 6 CXP 12 Fbr Cbl
2014-04-08 14:31:08 IST  Minor  Check SIB F13 6 CXP 8 Fbr Cbl
2014-04-08 14:31:08 IST  Minor  Check SIB F13 6 CXP 6 Fbr Cbl
2014-04-08 14:31:08 IST  Minor  Check SIB F13 6 CXP 4 Fbr Cbl
2014-04-08 14:31:08 IST  Minor  Check SIB F13 6 CXP 2 Fbr Cbl
2014-04-08 14:31:08 IST  Minor  Check SIB F13 6 CXP 0 Fbr Cbl
2014-04-08 14:31:08 IST  Minor  SIB F13 6 CXP 14 LOL
2014-04-08 14:31:08 IST  Minor  Check SIB F13 6 CXP 14
2014-04-08 14:31:08 IST  Minor  SIB F13 6 CXP 12 LOL
2014-04-08 14:31:08 IST  Minor  Check SIB F13 6 CXP 12
2014-04-08 14:31:08 IST  Major  SIB F13 6 CXP 10 fault
2014-04-08 14:31:08 IST  Minor  SIB F13 6 CXP 8 LOL
2014-04-08 14:31:08 IST  Minor  Check SIB F13 6 CXP 8
2014-04-08 14:31:08 IST  Minor  SIB F13 6 CXP 6 LOL
2014-04-08 14:31:08 IST  Minor  Check SIB F13 6 CXP 6
2014-04-08 14:31:08 IST  Minor  SIB F13 6 CXP 4 LOL
2014-04-08 14:31:08 IST  Minor  Check SIB F13 6 CXP 4
2014-04-08 14:31:08 IST  Minor  SIB F13 6 CXP 2 LOL
2014-04-08 14:31:08 IST  Minor  Check SIB F13 6 CXP 2
2014-04-08 14:31:08 IST  Minor  SIB F13 6 CXP 0 LOL
2014-04-08 14:31:08 IST  Minor  Check SIB F13 6 CXP 0
2014-04-08 14:31:08 IST  Minor  SIB F13 12 CXP 14 XC HSL Link Error
2014-04-08 14:29:27 IST  Minor  LCC 0 Minor Errors
2014-04-08 14:28:37 IST  Major  LCC 0 Major Errors
2014-04-08 14:28:37 IST  Major  LCC 2 Major Errors
2014-04-08 14:28:37 IST  Minor  LCC 2 Minor Errors
2014-04-08 14:28:24 IST  Major  SIB F2S 4/6 Absent
2014-04-08 14:28:24 IST  Major  SIB F2S 4/4 Absent
2014-04-08 14:28:24 IST  Major  SIB F2S 4/2 Absent
2014-04-08 14:28:24 IST  Major  SIB F2S 4/0 Absent
2014-04-08 14:28:24 IST  Major  SIB F2S 3/6 Absent
2014-04-08 14:28:24 IST  Major  SIB F2S 3/4 Absent
2014-04-08 14:28:24 IST  Major  SIB F2S 3/2 Absent
2014-04-08 14:28:24 IST  Major  SIB F2S 3/0 Absent
2014-04-08 14:28:24 IST  Major  SIB F13 9 Absent
2014-04-08 14:28:24 IST  Major  SIB F13 8 Absent
2014-04-08 14:28:24 IST  Major  SIB F13 7 Absent
2014-04-08 14:28:24 IST  Major  SIB F13 4 Absent
2014-04-08 14:28:24 IST  Major  SIB F13 1 Absent
2014-04-08 14:28:22 IST  Major  PEM 0 Input Failure
2014-04-08 14:28:22 IST  Major  PEM 0 Not OK

lcc0-re0:
--------------------------------------------------------------------------
12 alarms currently active
Alarm time               Class  Description
2014-04-08 14:36:08 IST  Minor  CB 1  M/S Switch Changed
2014-04-08 14:36:08 IST  Minor  CB 1  CHASSIS ID Changed
2014-04-08 14:35:43 IST  Minor  CB 0  M/S Switch Changed
```

```
2014-04-08 14:35:43 IST  Minor  CB 0  CHASSIS ID Changed
2014-04-08 14:29:30 IST  Minor  SIB 4 Not Online
2014-04-08 14:29:30 IST  Minor  SIB 3 Not Online
2014-04-08 14:29:30 IST  Minor  SIB 2 Not Online
2014-04-08 14:29:24 IST  Major  Rear Fan Tray Failure
2014-04-08 14:29:24 IST  Major  Front Bottom Fan Tray Improper for Platform
2014-04-08 14:29:24 IST  Major  Front Top Fan Tray Improper for Platform
2014-04-08 14:28:37 IST  Major  SIB 4 Absent
2014-04-08 14:28:37 IST  Major  SIB 3 Absent

lcc2-re0:
--------------------------------------------------------------------------
12 alarms currently active
Alarm time               Class  Description
2014-04-08 14:36:02 IST  Minor  CB 1  M/S Switch Changed
2014-04-08 14:36:02 IST  Minor  CB 1  CHASSIS ID Changed
2014-04-08 14:35:42 IST  Minor  CB 0  M/S Switch Changed
2014-04-08 14:34:42 IST  Minor  CB 0  CHASSIS ID Changed
2014-04-08 14:29:29 IST  Minor  SIB 0 CXP 7 Unsupported Optics
2014-04-08 14:29:27 IST  Major  Front Bottom Fan Tray Improper for Platform
2014-04-08 14:29:27 IST  Major  Front Top Fan Tray Improper for Platform
2014-04-08 14:29:25 IST  Minor  SIB 4 Not Online
2014-04-08 14:29:25 IST  Minor  SIB 3 Not Online
2014-04-08 14:28:47 IST  Major  PEM 0 Not OK
2014-04-08 14:28:36 IST  Major  SIB 2 Absent
2014-04-08 14:28:36 IST  Minor  Host 0 Boot from alternate media

lcc6-re0:
--------------------------------------------------------------------------
2 alarms currently active
Alarm time               Class  Description
2013-11-06 04:03:56 PST  Minor  SIB 1 CXP 0 XC HSL Link Error
2013-11-06 03:49:32 PST  Major  PEM 1 Not OK
```

show chassis alarms (Alarms on a T4000 Router After the enhanced-mode Statement is Enabled)

To enable improved virtual private LAN service (VPLS) MAC address learning on T4000 routers, you must include the **enhanced-mode** statement at the **[edit chassis network-services]** hierarchy level and reboot the router. When router reboots, only the T4000 Type 5 FPCs are required to be present on the router. If there are any other FPCs (apart from T4000 Type 5 FPCs) on the T4000 router, such FPCs become offline, and FPC misconfiguration alarms are generated. The **show chassis alarm** command output displays FPC misconfiguration (**FPC *fpc-slot* misconfig**) as the reason for the generation of the alarms.

```
user@host> show chassis alarms
2 alarms currently active
  Alarm time               Class  Description
  2011-10-22 10:10:47 PDT  Major  FPC 1 misconfig
  2011-10-22 10:10:46 PDT  Major  FPC 0 misconfig
```

show chassis alarms (Backup Routing Engine)

```
user@host> show chassis alarms
2 alarms are currently active
Alarm time               Class  Description
2005-04-07 10:12:22 PDT  Minor  Host 1 Boot from alternate media
2005-04-07 10:11:54 PDT  Major  Host 1 compact-flash missing in Boot List
```

show chassis alarms (EX Series Switch)

```
user@switch> show chassis alarms
 4 alarms currently active
Alarm time               Class  Description
2014-03-12 15:36:09 UTC  Minor  Require a Fan Tray upgrade
2014-03-12 15:00:02 UTC  Major  PEM 0 Input Failure
2014-03-12 15:00:02 UTC  Major  PEM 0 Not OK
2014-03-12 14:59:51 UTC  Minor  Host 1 Boot from alternate media
```

show chassis alarms (Alarms Active on the QFX Series and OCX Series Switches)

```
user@switch> show chassis alarms
1 alarms currently active
Alarm time               Class  Description
2012-03-05 2:10:24 UTC  Major  FPC 0 PEM 0 Airflow not matching Chassis Airflow
```

show chassis alarms node-device (Alarms Active on the QFabric System)

```
user@switch> show chassis alarms node-device Test
node-device ED3694
3 alarms currently active
Alarm time               Class  Description
2011-08-24 16:04:15 UTC  Major  Test:fte-0/1/2: Link down
2011-08-24 16:04:14 UTC  Major  Test:fte-0/1/0: Link down
2011-08-24 14:21:14 UTC  Major  Test PEM 0 is not supported/powered
```

show chassis alarms (Alarms Active on the QFabric System)

```
user@switch> show chassis alarms
IC-1:
--------------------------------------------------------------------------
1 alarms currently active
Alarm time               Class  Description
2011-08-24 16:04:15 UTC  Minor  Backup RE Active

Test:
--------------------------------------------------------------------------
3 alarms currently active
Alarm time               Class  Description
2011-08-24 16:04:15 UTC  Major  Test:fte-0/1/2: Link down
2011-08-24 16:04:14 UTC  Major  Test:fte-0/1/0: Link down
2011-08-24 14:21:14 UTC  Major  Test PEM 0 is not supported/powered

SNG-0:
--------------------------------------------------------------------------

NW-NG-0:
--------------------------------------------------------------------------
1 alarms currently active
Alarm time               Class  Description
2011-08-24 15:49:27 UTC  Major  Test PEM 0 is not supported/powered
```

show chassis alarms (Alarms Active on an EX8200 Switch)

```
user@switch> show chassis alarms

6 alarms currently active
```

```
Alarm time               Class  Description
2010-12-02 19:15:22 UTC  Major  Fan Tray Failure
2010-12-02 19:15:22 UTC  Major  Fan Tray Failure
2010-12-02 19:15:14 UTC  Minor  Check CB 0 Fabric Chip 1 on Plane/FPC/PFE: 1/5/0,
 1/5/1, 1/5/2, 1/5/3, 1/7/0, 1/7/1, 1/7/2, 1/7/3, 2/5/0, 2/5/1, ...
2010-12-02 19:15:14 UTC  Minor  Check CB 0 Fabric Chip 0 on Plane/FPC/PFE: 1/5/0,
 1/5/1, 1/5/2, 1/5/3, 1/7/0, 1/7/1, 1/7/2, 1/7/3, 2/5/0, 2/5/1, ...
2010-12-02 19:14:18 UTC  Major  PSU 1 Output Failure
2010-12-02 19:14:18 UTC  Minor  Loss of communication with Backup RE
```

show chassis alarms (EX9251 Switch)

```
user@switch> show chassis alarms
 2 alarms currently active
Alarm time               Class  Description
2018-03-08 05:13:10 PST  Major  PEM 0 Not Powered
2018-03-08 05:13:10 PST  Major  Fan Tray 2 is not present
```

show chassis alarms (EX9253 Switch)

```
user@switch> show chassis alarms
6 alarms currently active
Alarm time               Class  Description
2018-03-07 01:09:01 PST  Major  Power Budget:Insufficient Power
2018-03-06 23:56:34 PST  Minor  Loss of communication with Backup RE
2018-02-15 00:48:10 PST  Minor  PEM 3 Not Present
2018-02-15 00:48:10 PST  Minor  PEM 2 Not Present
2018-02-15 00:48:07 PST  Major  PEM 4 Not Powered
2018-02-15 00:48:07 PST  Major  PEM 1 Not Powered
```

show chassis alarms (Alarms Active on a PTX5000 Packet Transport Router)

```
user@host> show chassis alarms

23 alarms currently active
Alarm time               Class  Description
2011-07-12 16:22:05 PDT  Minor  No Redundant Power for Rear Chassis
2011-07-12 16:22:05 PDT  Major  PDU 0 PSM 1 Not OK
2011-07-12 16:21:57 PDT  Minor  No Redundant Power for Fan 0-2
2011-07-12 16:21:57 PDT  Major  PDU 0 PSM 0 Not OK
2011-07-12 15:56:06 PDT  Major  PDU 1 PSM 2 Not OK
2011-07-12 15:56:06 PDT  Minor  No Redundant Power for FPC 0-7
2011-07-12 15:56:06 PDT  Major  PDU 0 PSM 3 Not OK
2011-07-12 15:28:20 PDT  Major  PDU 0 PSM 2 Not OK
2011-07-12 15:19:14 PDT  Minor  Backup RE Active
```

show chassis alarms (Mix of PDUs Alarm on a PTX5000 Packet Transport Router with FPC2-PTX-P1A)

All PDUs installed on a PTX5000 router must be of the same type. The **Mix of PDUs** or **Power Manager Non Operational** alarm is raised when different types of PDUs are installed on a PTX5000 router.

```
user@host> show chassis alarms
15 alarms currently active
Alarm time               Class  Description
2013-03-19 23:03:53 PDT  Minor  No Redundant Power
2013-03-19 23:03:48 PDT  Minor  Mix of PDUs
2013-03-19 23:03:47 PDT  Minor  PDU 1 PSM 3 Absent
2013-03-19 23:03:47 PDT  Minor  PDU 1 PSM 2 Absent
```

```
2013-03-19 23:03:47 PDT  Minor  PDU 1 PSM 1 Absent
2013-03-19 23:03:47 PDT  Minor  PDU 1 PSM 0 Absent
2013-03-19 23:03:46 PDT  Major  No CG Online
```

show chassis alarms (PDU Converter Failed Alarm on a PTX5000 Packet Transport Router with FPC2-PTX-P1A)

The **PDU Converter Failed** alarm is raised when one or more 36 V booster converter of a DC PDU fails. If two or more 36 V booster converter fails, fan trays fail and the router might get over heated. Therefore, when this alarm is raised, check the PDU and replace it, if required.

```
user@host> show chassis alarms
11 alarms currently active
Alarm time               Class  Description
2013-12-11 22:14:13 PST  Minor  No Redundant Power for System
2013-12-11 22:14:10 PST  Major  PDU 0 PSM 7 Not OK
2013-12-11 22:14:10 PST  Major  PDU 0 PSM 6 Not OK
2013-12-11 22:14:10 PST  Major  PDU 0 PSM 5 Not OK
2013-12-11 22:14:10 PST  Major  PDU 0 PSM 4 Not OK
2013-12-11 22:14:10 PST  Major  PDU 0 PSM 3 Not OK
2013-12-11 22:14:10 PST  Major  PDU 0 PSM 2 Not OK
2013-12-11 22:14:10 PST  Major  PDU 0 PSM 1 Not OK
2013-12-11 22:14:10 PST  Major  PDU 0 PSM 0 Not OK
2013-12-11 22:14:10 PST  Major  PDU 0 Not OK
2013-12-11 22:14:01 PST  Major  PDU 0 Converter Failed
```

show chassis alarms (No Power for System Alarm on a PTX5000 Packet Transport Router with FPC2-PTX-P1A)

```
user@host> show chassis alarms
8 alarms currently active
Alarm time               Class  Description
2013-11-19 01:58:41 PST  Major  No Power for System
2013-11-19 01:58:37 PST  Major  PDU 0 PSM 1 Not OK
2013-11-19 01:56:46 PST  Major  PDU 0 PSM 2 Not OK
2013-11-19 01:54:26 PST  Major  PDU 0 PSM 3 Not OK
2013-11-19 01:53:30 PST  Major  PDU 1 PSM 3 Not OK
2013-11-19 01:53:29 PST  Major  PDU 1 PSM 2 Not OK
2013-11-19 01:53:29 PST  Major  PDU 1 PSM 1 Not OK
2013-11-19 01:53:29 PST  Major  PDU 1 PSM 0 Not OK
```

show chassis alarms (Alarms Active on an ACX2000 Universal Metro Router)

```
user@host> show chassis alarms
7 alarms currently active
Alarm time               Class  Description
2012-05-22 11:19:09 UTC  Major  xe-0/3/1: Link down
2012-05-22 11:19:09 UTC  Major  xe-0/3/0: Link down
2012-05-22 11:19:09 UTC  Major  ge-0/1/7: Link down
2012-05-22 11:19:09 UTC  Major  ge-0/1/6: Link down
2012-05-22 11:19:09 UTC  Major  ge-0/1/3: Link down
2012-05-22 11:19:09 UTC  Major  ge-0/1/2: Link down
2012-05-22 11:19:09 UTC  Major  ge-0/1/1: Link down
```

show chassis alarms (Active Alarm to Indicate Status of the Bad SCB Clock on MX Series)

```
user@host> show chassis alarms
1 alarm currently active
Alarm time               Class  Description
2013-08-06 07:48:35 PDT  Major  CB 0 19.44 MHz clock failure
```

show chassis alarms (Alarms active on a PTX1000 Packet Transport Router)

```
user@host> show chassis alarms
2 alarms currently active
Alarm time               Class  Description
2004-08-10 00:55:49 UTC  Major  PEM 1 Not Present
2004-08-10 00:55:49 UTC  Major  PEM 0 Not Present
```

show chassis alarms (MX10003 Router)

If LCMD is down on the backup RE, then the following alarm is seen on the Master.

```
user@host> show chassis alarms
1 alarm currently active
Alarm time               Class  Description
2017-05-09 13:26:27 PDT  Major  VMHost RE 1 host application failed
```

If LCMD is down on the master, then following alarms are displayed.

```
user@host> show chassis alarms
3 alarms currently active
Alarm time               Class  Description
2017-05-10 14:12:21 PDT  Major  VMHost RE 0 host application failed
2017-05-10 14:12:16 PDT  Minor  LCM Peer Absent
2017-05-09 13:26:27 PDT  Major  VMHost RE 1 host application failed
```

If the LCMD process is crashing on the master, the system will switchover after one minute provided the backup RE LCMD connection is stable. The system will not switchover under the following conditions: if the backup RE LCMD connection is unstable or if the current master just gained mastership. When the master has just gained mastership, the switchover happens only after four minutes.

The LCM peer connection un-stable alarm is raised when the LCMD-CHASD IPC communication flaps three times within a small interval of two to three minutes. Once LCM peer connection un-stable alarm is raised, the connection status is monitored for two minutes.

```
user@host> show chassis alarms
7 alarms currently active
Alarm time               Class  Description
2017-05-29 10:12:17 PDT  Minor  LCM Peer Connection un-stable
2017-05-29 09:04:17 PDT  Minor  PEM 8 Not Powered
2017-05-29 09:04:17 PDT  Minor  PEM 9 Not Powered
2017-05-29 09:04:17 PDT  Minor  PEM 7 Not Powered
2017-05-29 09:04:17 PDT  Minor  PEM 3 Not Powered
2017-05-29 09:04:17 PDT  Minor  PEM 0 Not Powered
2017-05-29 09:04:08 PDT  Minor  Loss of communication with Backup RE
```

If there are no more connection flaps within this two minutes time interval, the LCM peer connection un-stable alarm is cleared.

```
6 alarms currently active
Alarm time               Class  Description
2017-05-29 09:04:17 PDT  Minor  PEM 8 Not Powered
2017-05-29 09:04:17 PDT  Minor  PEM 9 Not Powered
2017-05-29 09:04:17 PDT  Minor  PEM 7 Not Powered
2017-05-29 09:04:17 PDT  Minor  PEM 3 Not Powered
```

```
2017-05-29 09:04:17 PDT  Minor  PEM 0 Not Powered
2017-05-29 09:04:08 PDT  Minor  Loss of communication with Backup RE
```

A major alarm is raised even if there is on one PLL lock error, and this alarm can be cleared only through an FPC restart.

```
user@host> show chassis alarms
4 alarms currently active
Alarm time               Class  Description
2017-02-16 09:06:06 PDT  Major  FPC 0 Major Errors
2017-02-16 09:08:40 PDT  Major  FPC 1 Major Errors
2017-02-16 09:11:47 PST  Minor  Fan Tray 3 Pair 1 Outer Fan running at over speed
2017-02-16 09:11:47 PST  Minor  Fan Tray 3 Pair 1 Inner Fan running at over speed
```

show chassis alarms (Alarms active on a MX10008 Router)

```
user@host> show chassis alarms
13 alarms currently active
Alarm time               Class  Description
2018-07-17 05:48:08 PDT  Major  FPC 2 I2C Failure
2018-07-17 05:47:02 PDT  Minor  Mixed Master and Backup RE types
2018-07-17 05:47:01 PDT  Major  Fan Tray 0 Fan 5 Failed
2018-07-17 05:47:01 PDT  Major  Fan Tray 0 Fan 4 Failed
2018-07-17 05:47:01 PDT  Minor  PEM 5 Not Powered
2018-07-17 05:47:01 PDT  Minor  PEM 5 Feed 2 has no input source
2018-07-17 05:47:01 PDT  Minor  PEM 5 Feed 1 has no input source
2018-07-17 05:47:01 PDT  Minor  PEM 4 Not Powered
2018-07-17 05:47:01 PDT  Minor  PEM 4 Feed 2 has no input source
2018-07-17 05:47:01 PDT  Minor  PEM 4 Feed 1 has no input source
2018-07-17 05:47:01 PDT  Minor  PEM 3 Not Powered
2018-07-17 05:47:01 PDT  Minor  PEM 3 Feed 2 has no input source
2018-07-17 05:47:01 PDT  Minor  PEM 3 Feed 1 has no input source
```

show chassis environment

List of Syntax

Syntax

show chassis environment

Syntax (T320, T640, T1600, and T4000 Routers)

show chassis environment
<cb *cb-slot-number*>
<fpc *fpc-slot-number*>
<fpm>
<pem *pem-slot-number*>
<routing-engine *re-slot-number*>
<scg *scg-slot-number*>
<sib *sib-slot-number*>

Syntax (TX Matrix Routers)

show chassis environment
<lcc *number* | scc>

Syntax (TX Matrix Plus Routers)

show chassis environment
<cb *cb-slot-number*>
<cip *cip-slot-number*>
<fpc *fpc-slot-number*>
<fpm>
<lcc *number*>
<pem *pem-slot-number*>
<routing-engine *re-slot-number*>
<scg *scg-slot-number*>
< sfc *number*>
<sib *sib-slot-number*>

Syntax (MX Series Routers)

show chassis environment
<all-members>
<local>
<member *member-id*>

Syntax (MX104 Universal Routing Platforms)

show chassis environment
<cb>
<pem *pem-slot-number*>
<routing-engine *re-slot-number*>

Syntax (MX150 Router Appliance)

show chassis environment
<pem *pem-slot-number*>
<routing-engine *re-slot-number*>

Syntax (MX2010, MX2020, and MX2008 Universal Routing Platforms)

show chassis environment
<adc *adc-slot-number*>
<all-members>
<cb *cb-slot-number*>
<fan *fantray-slot-number*>
<fpc *fpc-slot-number*>
<fpm>
<local>
<member *member-id*>
<monitored>
<psm *psm-slot-number*>
<routing-engine *re-slot-number*>
<sfb *sfb-slot-number*>
<satellite [fpc-slot *slot-id* |device-alias *alias-name*]>

Syntax (MX10003 and MX204 Universal Routing Platforms)

show chassis environment
<cb *cb-slot-number*>
<fpc *fpc-slot-number*>
<pem *pem-slot-number*>
<routing-engine *re-slot-number*>

Syntax (EX8200 Switches)

show chassis environment
<all-members>
<cb *cb-slot-number*>
<fpc *fpc-slot-number*>
<local>
<member *member-id*>
<psu *psu-slot-number*>
<routing-engine *re-slot-number*>

Syntax (EX Series Switches except EX8200)

show chassis environment
<all-members>
<fpc *fpc-slot-number*>
<local>
<member *member-id*>
<power-supply-unit>
<routing-engine>
<satellite [fpc-slot *slot-id* |device-alias *alias-name*]>

Syntax (QFX Series)

show chassis environment
<cb *slot-number* <interconnect-device *name*>>
<fpc *slot-number* <interconnect-device *name*>>
<interconnect-device *name* <*slot-number*>

<node-device *name*>
<pem *slot-number* (interconnect-device *name slot-number*) | (node-device *name*)>
<routing-engine *name* <interconnect-device *name slot-number*>>

Syntax (OCX Series)

show chassis environment

Syntax (PTX Series Packet Transport Routers)

show chassis environment
<cb *cb-slot-number*>
<ccg *ccg-slot-number* >
<fpc *fpc-slot-number*>
<fpm>
<monitored>
<pdu *pdu-slot-number*>
<routing-engine *re-slot-number*>
<sib *sib-slot-number*>

Syntax (ACX Series Universal Metro Routers)

show chassis environment
<cb *cb-slot-number*>
<pem *pem-slot-number*>
<routing-engine *re-slot-number*>

Syntax (ACX5048 and ACX5096 Routers)

show chassis environment
<fpc *slot-number*>
<pem>
<routing-engine>

Syntax (ACX500 Routers)

show chassis environment
<cb *cb-slot-number*>
<routing-engine *re-slot-number*>

Release Information

Command introduced before Junos OS Release 7.4.
Command introduced in Junos OS Release 9.0 for EX Series switches.
sfc option introduced for the TX Matrix Plus router in Junos OS Release 9.6.
Command introduced in Junos OS Release 11.1 for QFX Series.
Command introduced in Junos OS Release 12.1x48 for PTX Series Packet Transport Routers.
monitored option added in Junos OS Release 12.1x48 for PTX Series Packet Transport Routers.
Command introduced in Junos OS Release 12.1 for T4000 Core Routers.
Command introduced in Junos OS Release 12.2 for ACX Series Universal Metro Routers.
Command introduced in Junos OS Release 12.3 for MX 2020 and MX2010 Universal Routing Platforms.
pem option introduced in Junos OS Release 12.3 for ACX4000 Universal Metro Routers.
satellite option introduced in Junos OS Release 14.2R3.
all-members, **local**, and **member** *member-id* options introduced in Junos OS Release 15.1 for MX2010 and MX2020 routers.
Command introduced in Junos OS Release 15.1X54-D20 for ACX5048 and ACX5096 Routers.
Command introduced in Junos OS Release 17.2 for MX2008 Universal Routing Platforms.

Command introduced in Junos OS Release 17.3 for MX150 Router Appliance.
Command introduced in Junos OS Release 17.2 for PTX10008 Routers.
Command introduced in Junos OS Release 17.3 for MX10003 Universal Routing Platforms.
Command introduced in Junos OS Release 17.4 for MX204 Universal Routing Platforms.
Command introduced in Junos OS Release 18.1R1 for EX9251 Switches.
Command introduced in Junos OS Release 18.2 for EX9253 Switches.
Command introduced in Junos OS Release 18.2R1 for MX10008 Routers.

Description Display environmental information about the router or switch chassis, including the temperature and information about the fans, power supplies, and Routing Engine.

In addition, on ACX4000 routers, display temperature information about the different channels of a Modular Interface Card (MIC). The number of channels displayed depends on the type of MIC installed.

Starting with Junos OS Release 14.1, the **show chassis environment cb** ***cb-slot-number*** **| ccg** ***ccg-slot-number*** **| fpc** ***fpc-slot-number*** **| fpm | monitored | pdu** ***pdu-slot-number*** **| routing-engine** ***re-slot-number*** **| sib** ***sib-slot-number*** operational mode command output displays environmental information for the new DC power supply module (PSM) and power distribution unit (PDU) that are added to provide power to the high-density FPC (FPC2-PTX-P1A) and other components in a PTX5000 Packet Transport Router.

Options **none**—Display environmental information about the router or switch chassis. On a TX Matrix router, display environmental information about the TX Matrix router and its attached T640 routers. On a TX Matrix Plus router, display environmental information about the TX Matrix Plus router and its attached routers.

all-members—(MX Series routers and EX Series switches only) (Optional) Display chassis environmental information for all the members of the Virtual Chassis configuration.

adc ***adc-slot-number***—(MX2010, MX2020, and MX2008 routers only) (Optional) Display chassis environmental information for the adapter cards. For MX2020 routers, replace ***adc-slot-number*** with a value from **0** through **19**. For MX2010 and MX2008 routers, replace ***adc-slot-number*** with a value from **0** through **9**.

cb ***cb-slot-number***—(ACX Series Universal Metro Routers, EX Series switches, M120, M320, and M40e routers, MX Series routers, MX2020 routers, MX2010 routers, MX2008 routers, PTX Series Packet Transport Routers, QFX Series, and T Series routers, and TX Matrix Plus routers only) (Optional) Display chassis environmental information for the Control Board. On devices other than EX Series switches, replace ***cb-slot*** with **0** or **1**.

cip ***cip-slot-number***—(TX Matrix Plus routers only) (Optional) Display chassis environmental information for the Connection Interface Panel (CIP). Replace the ***cip-slot-number*** variable with a value of **0** or **1**.

cb interconnect-device ***name***—(QFabric systems only) (Optional) Display chassis environmental information for the Control Board on an Interconnect device.

ccg ***ccg-slot-number***—(PTX Series only) (Optional) Display chassis environmental information for the Centralized Clock Generator. Replace ***cb-slot*** with a value of **0** or **1**.

fan ***fantray-slot-number***—(MX2010, MX2020, and MX2008 routers only) (Optional) Display chassis environmental information for the fan trays. Replace ***fantray-slot-number*** with a value from **0** through **3**.

fpc ***fpc-slot***—(EX Series switches, M120, M320, and M40e routers, MX Series routers, MX2010 routers, MX2020 routers, MX2008 routers, PTX Series Packet Transport Routers, QFX Series, QFX3500 switches, QFabric systems, T Series routers, and TX Matrix Plus routers) (Optional) Display chassis environmental information for a specified Flexible PIC Concentrator. For MX2010 and MX2008 routers, replace ***fpc-slot*** with a value from **0** through **9**. For MX2020 routers, replace ***fpc-slot*** with a value from **0** through **19**. For information about FPC numbering, see show chassis environment fpc. On a QFabric system, display chassis environmental information for a specified Flexible PIC Concentrator on an Interconnect device. On an EX Series switch, display chassis environmental information for a specified Flexible PIC Concentrator; see the hardware documentation for your switch for information on FPC numbering. On a TX Matrix Plus router with 3D SIBs replace *fpc-slot* with a value from **0** through **63**.

fpm—(M120, M320, and M40e routers, MX2010 routers, MX2020 routers, MX2008 routers, PTX Series, Packet Transport Routers, T Series routers, and TX Matrix Plus routers only) (Optional) Display chassis environmental information for the craft interface (FPM).

interconnect-device ***name***—(QFabric systems only) (Optional) Display chassis environmental information for the Interconnect device.

lcc ***number***—(TX Matrix routers and TX Matrix Plus routers only) (Optional) Line-card chassis number.

Replace *number* with the following values depending on the LCC configuration:

- 0 through 3, when T640 routers are connected to a TX Matrix router in a routing matrix.
- 0 through 3, when T1600 routers are connected to a TX Matrix Plus router in a routing matrix.
- 0 through 7, when T1600 routers are connected to a TX Matrix Plus router with 3D SIBs in a routing matrix.
- 0, 2, 4, or 6, when T4000 routers are connected to a TX Matrix Plus router with 3D SIBs in a routing matrix.

local—(MX Series routers and EX Series switches only) (Optional) Display chassis environmental information for the local Virtual Chassis member.

member ***member-id***—(MX Series routers and EX Series switches only) (Optional) Display chassis environmental information for the specified member of the Virtual Chassis

configuration. On MX Series routers, replace *member-id* with a value of **0** or **1**. For EX Series switches, see *member* for member ID values.

monitored—(MX2020 routers and PTX Series Packet Transport Routers only) (Optional) Display chassis environmental information for monitored temperatures only. Temperatures that are not included in temperature alarm computations are not displayed.

node-device *name*—(QFabric systems only) (Optional) Display chassis environmental information for the Node device.

pdu *pdu-slot-number*—(PTX Series only) (Optional) Display chassis environmental information for the specified power distribution unit.

pem—(QFX3500 switches and QFabric systems only) (Optional) Display chassis environmental information for the Power Entry Module on the specified Interconnect device or Node device.

pem *pem-slot-number*—(ACX Series Universal Metro Routers, M120, M320, and M40e routers, MX Series routers, MX104 routers, QFX Series, and T Series routers only) (Optional) Display chassis environmental information for the Power Entry Module on the specified Power Entry Module. For information about the options, see show chassis environment pem.

psm *psm-slot-number*—(MX2010, MX2020, and MX2008 routers only) (Optional) Display chassis environmental information for the power supply module. For MX2020 routers, replace ***psm-slot-number*** with a value from **0** through **17**. For MX2010 and MX2008 routers, replace ***psm-slot-number*** with a value from **0** through **8**.

psu *psu-slot-number*—(EX Series switches only) (Optional) Display chassis environmental information for a specified power supply.

routing-engine—(QFX3500 switches and QFabric systems only) (Optional) Display chassis environmental information for the Routing Engine on the specified Interconnect device.

routing-engine *re-slot-number*—(Optional) Display chassis environmental information for the specified Routing Engine. For information about the options, see show chassis environment routing-engine.

satellite [fpc-slot *slot-id* | device-alias *alias-name*]—(Junos Fusion only)(Optional) Display chassis environmental information for the specified satellite device in a Junos Fusion, or for all satellite devices in the Junos Fusion if no satellite devices are specified.

scg—(T Series routers only) (Optional) Display chassis environmental information about the SONET Clock Generator.

scc—(TX Matrix routers only) (Optional) Display chassis environmental information about the TX Matrix router (switch-card chassis).

sfb ***sfb-slot-number***—(MX2010, MX2020, and MX2008 routers only) (Optional) Display chassis environmental information for the switch fabric board. Replace ***sfb-slot-number*** with a value from **0** through **7**.

sfc ***number***—(TX Matrix Plus routers only) (Optional) Display chassis environmental information about the respective TX Matrix Plus router (switch-fabric chassis). Replace ***number*** variable with **0**.

sib ***sib-slot-number***—(M320 routers, PTX Series Packet Transport Routers, and T Series routers only) (Optional) Display chassis environmental information about the specified switch interface board. For information about the options, see *show chassis environment sib*.

Required Privilege Level

view

Related Documentation

- *show chassis environment adc*
- *show chassis environment cb*
- *show chassis environment ccg*
- *show chassis environment cip*
- show chassis environment fpc on page 287
- *show chassis environment fpm*
- *show chassis environment lcc*
- *show chassis environment mcs*
- *show chassis environment monitored*
- *show chassis environment pcg*
- *show chassis environment pdu*
- show chassis environment pem on page 336
- *show chassis environment psm*
- *show chassis environment psu*
- show chassis environment routing-engine on page 350
- *show chassis environment scg*
- *show chassis environment sfb*
- *show chassis environment sib*
- *show chassis environment sfc*

List of Sample Output

show chassis environment (M5 Router) on page 214
show chassis environment (M7i Router) on page 214
show chassis environment (M10 Router) on page 215

show chassis environment (ACX500 Router) on page 286

Output Fields Table 10 on page 213 lists the output fields for the **show chassis environment** command. Output fields are listed in the approximate order in which they appear.

Table 10: show chassis environment Output Fields

Field Name	Field Description

Class	Information about the category or class of chassis component:
	• **Power**: Power information:
	  ◦ (M5, M10, M20, and M40 routers and EX Series switches only) Power supply status: **OK**, **Testing**, (during initial power-on), **Failed**, or **Absent**.
	  ◦ (M7i, M10i, M40e, M120, M160, M320, and T Series routers and EX Series switches only) Power Entry Modules status: **OK**, **Testing**, (during initial power-on), **Check**, **Failed**, or **Absent**.
	  ◦ (PTX Series only) Power information is reported in PDU or PSM combinations. The status is: **OK**, **Testing**, (during initial power-on), **Check**, **Failed**, or **Absent**.
	• **Temp**: Temperature of air flowing through the chassis in degrees Celsius (C) and Fahrenheit (F).
	  ◦ On PTX Series Packet Transport Routers and MX2010, MX2020, and MX2008 Routers, multiple cooling zones are supported. FRU temperatures in each zone are coordinated with the fan speed of fan trays in those zones.
	  ◦ EX2200 switches have a side-to-rear cooling system. The **Local Intake** temperature is measured by the sensor on the right side of the chassis, and the **Remote Intake** temperature is measured by the sensor on the left side of the chassis.
	• **Pic**: On ACX4000 routers, multiple temperature channels on a MIC. The status is: **OK** and the **Measurement** is in degrees Celsius (C) and Fahrenheit (F).
	• **Fan**: Fan status: **OK**, **Testing** (during initial power-on), **Failed**, or **Absent**.
	  On PTX Series Packet Transport Routers and MX2010, MX2020, and MX2008 Routers, multiple fan trays are supported. Fan status is reported in Fan Tray or Fan combinations. **Measurement** indicates actual fan RPM (PTX and MX2010, MX2020, and MX2008 Routers only).
	• **Misc**: Information about other components of the chassis.
	  ◦ On some routers, this field indicates the status of one or more additional components.
	  ◦ On the M40e, M160, and M320 router, **Misc** includes **CIP** (Connector Interface Panel). **OK** indicates that the CIP is present. **Absent** indicates that the CIP is not present.
	  ◦ On T Series routers, **Misc** includes **CIP** and **SPMB** (Switch Processor Mezzanine Board). **OK** indicates that the **CIP** or **SPMB** is present. **Absent** indicates that the **CIP** or **SPMB** is not present.
	  ◦ On PTX Series Packet Transport Routers, **Misc** includes the **SPMB** (Switch Processor Mezzanine Board). The SPMB is located on the control boards. **OK** indicates that the control board is present. **Absent** indicates that the control board is not present.

Item	(MX2010, MX2020, and MX2008 Routers) Information about the chassis component: Routing Engines, Controls Boards (CBs), Switch Fabric Boards (SFBs), PICs, Flexible PIC Concentrators (FPCs), and Adapter Cards (ADCs). (MX104 Routers) Information about the chassis components: Routing Engines, Control Board (CB), Power Entry Module (PEM), and Compact Forwarding Engine Board (AFEB). (QFabric Systems) Information about the chassis component: Control Boards, Routing Engines, Flexible PIC Concentrators (FPCs), and Power Entry Modules (PEMs), Node Devices, and Interconnect Devices. (QFX Series) Information about the chassis component: Flexible PIC Concentrators (FPCs), and Power Entry Modules (PEMs).

Table 10: show chassis environment Output Fields (continued)

Field Name	Field Description
Status	(MX104, MX2010, MX2020, and MX2008 Routers) Status of the specified chassis component. For example, if the Class is Fan, the fan status can be: • **OK**: The fans are operational. • **Testing**: The fans are being tested during initial power-on. • **Failed**: The fans have failed or the fans are not spinning. • **Absent**: The fan tray is not installed. If the Class is Power, the power supply status can be: • **OK**: The power component is operational. • **Testing**: The power component is being tested during initial power-on. • **Check**: There is insufficient power---that is, fewer than the minimum required feeds are connected. • **Failed**: The inputs leads have failed. • **Absent**: The power component is not installed.
Measurement	(MX104, MX2010, MX2020, and MX2008 Routers) Dependant on the Class. For example, if the Class is Temp, indicates the temperature in degree Celsius and degrees Fahrenheit. If the Class is Fan, indicates actual fan RPM.

Sample Output

show chassis environment (M5 Router)

```
user@host> show chassis environment
Class Item                  Status     Measurement
Power Power Supply A        OK
      Power Supply B        Absent
Temp  FPC 0                 OK         30 degrees C / 86 degrees F
      FEB                   OK         33 degrees C / 91 degrees F
      PS Intake             OK         27 degrees C / 80 degrees F
      PS Exhaust            OK         27 degrees C / 80 degrees F
      Routing Engine        OK         34 degrees C / 93 degrees F
Fans  Left Fan 1            OK         Spinning at normal speed
      Left Fan 2            OK         Spinning at normal speed
      Left Fan 3            OK         Spinning at normal speed
      Left Fan 4            OK         Spinning at normal speed
Misc  Craft Interface       OK
```

show chassis environment (M7i Router)

```
user@host> show chassis environment
Class Item                  Status     Measurement
Power Power Supply 0        OK
      Power Supply 1        Absent
Temp  Intake                OK         22 degrees C / 71 degrees F
      FPC 0                 OK         23 degrees C / 73 degrees F
      Power Supplies        OK         23 degrees C / 73 degrees F
      CFEB Intake           OK         24 degrees C / 75 degrees F
      CFEB Exhaust          OK         29 degrees C / 84 degrees F
      Routing Engine        OK         26 degrees C / 78 degrees F
Fans  Fan 1                 OK         Spinning at normal speed
```

```
      Fan 2                  OK         Spinning at normal speed
      Fan 3                  OK         Spinning at normal speed
      Fan 4                  OK         Spinning at normal speed
```

show chassis environment (M10 Router)

```
user@host> show chassis environment
Class Item                   Status     Measurement
Power Power Supply A         OK
      Power Supply B         Failed
Temp  FPC 0                  OK         36 degrees C / 96 degrees F
      FPC 1                  OK         35 degrees C / 95 degrees F
      FEB                    OK         34 degrees C / 93 degrees F
      PS Intake              OK         31 degrees C / 87 degrees F
      PS Exhaust             OK         34 degrees C / 93 degrees F
      Routing Engine         OK         35 degrees C / 95 degrees F
Fans  Left Fan 1             OK         Spinning at normal speed
      Left Fan 2             OK         Spinning at normal speed
      Left Fan 3             OK         Spinning at normal speed
      Left Fan 4             OK         Spinning at normal speed
Misc  Craft Interface        OK
```

show chassis environment (M10i Router)

```
user@host> show chassis environment
Class Item                   Status     Measurement
Power Power Supply 0         OK
      Power Supply 1         OK
      Power Supply 2         Absent
      Power Supply 3         Absent
Temp  Intake                 OK         26 degrees C / 78 degrees F
      FPC 0                  OK         27 degrees C / 80 degrees F
      FPC 1                  OK         28 degrees C / 82 degrees F
      Lower Power Supplies   OK         29 degrees C / 84 degrees F
      Upper Power Supplies   OK         28 degrees C / 82 degrees F
      CFEB Intake            OK         27 degrees C / 80 degrees F
      CFEB Exhaust           OK         36 degrees C / 96 degrees F
      Routing Engine 0       OK         31 degrees C / 87 degrees F
      Routing Engine 1       OK         27 degrees C / 80 degrees F
Fans  Fan Tray 0 Fan 1       OK         Spinning at normal speed
      Fan Tray 0 Fan 2       OK         Spinning at normal speed
      Fan Tray 0 Fan 3       OK         Spinning at normal speed
      Fan Tray 0 Fan 4       OK         Spinning at normal speed
      Fan Tray 0 Fan 5       OK         Spinning at normal speed
      Fan Tray 0 Fan 6       OK         Spinning at normal speed
      Fan Tray 0 Fan 7       OK         Spinning at normal speed
      Fan Tray 0 Fan 8       OK         Spinning at normal speed
      Fan Tray 1 Fan 1       Absent
      Fan Tray 1 Fan 2       Absent
      Fan Tray 1 Fan 3       Absent
      Fan Tray 1 Fan 4       Absent
      Fan Tray 1 Fan 5       Absent
      Fan Tray 1 Fan 6       Absent
      Fan Tray 1 Fan 7       Absent
      Fan Tray 1 Fan 8       Absent
```

show chassis environment (M20 Router)

```
user@host> show chassis environment
Class Item                  Status     Measurement
Power Power Supply A        OK
      Power Supply B        Absent
Temp  FPC 0                 OK         28 degrees C / 82 degrees F
      FPC 1                 OK         27 degrees C / 80 degrees F
      Power Supply A        OK         22 degrees C / 71 degrees F
      Power Supply B        Absent
      SSB 0                 OK         30 degrees C / 86 degrees F
      Backplane             OK         22 degrees C / 71 degrees F
      Routing Engine 0      OK         26 degrees C / 78 degrees F
      Routing Engine 1      Testing
Fans  Rear Fan              OK         Spinning at normal speed
      Front Upper Fan       OK         Spinning at normal speed
      Front Middle Fan      OK         Spinning at normal speed
      Front Bottom Fan      OK         Spinning at normal speed
Misc  Craft Interface       OK
```

show chassis environment (M40 Router)

```
user@host> show chassis environment
Class Item                  Status     Measurement
Power Power Supply A        OK
      Power Supply B        Absent
Temp  FPC 3                 OK         24 degrees C / 75 degrees F
      FPC 6                 OK         26 degrees C / 78 degrees F
      SCB                   OK         26 degrees C / 78 degrees F
      Backplane @ A1        OK         28 degrees C / 82 degrees F
      Backplane @ A2        OK         23 degrees C / 73 degrees F
      Routing Engine        OK         26 degrees C / 78 degrees F
Fans  Top Impeller          OK         Spinning at normal speed
      Bottom impeller       OK         Spinning at normal speed
      Rear Left Fan         OK         Spinning at normal speed
      Rear Center Fan       OK         Spinning at normal speed
      Rear Right Fan        OK         Spinning at normal speed
Misc  Craft Interface       OK
```

show chassis environment (M40e Router)

```
user@host> show chassis environment
Class Item                  Status     Measurement
Power PEM 0                 OK
      PEM 1                 Absent
Temp  PCG 0                 OK         44 degrees C / 111 degrees F
      PCG 1                 OK         47 degrees C / 116 degrees F
      Routing Engine 0      OK         40 degrees C / 104 degrees F
      Routing Engine 1      OK         37 degrees C / 98 degrees F
      MCS 0                 OK         45 degrees C / 113 degrees F
      MCS 1                 OK         42 degrees C / 107 degrees F
      SFM 0 SPP             OK         40 degrees C / 104 degrees F
      SFM 0 SPR             OK         44 degrees C / 111 degrees F
      SFM 1 SPP             OK         43 degrees C / 109 degrees F
      SFM 1 SPR             OK         45 degrees C / 113 degrees F
      FPC 0                 OK         38 degrees C / 100 degrees F
      FPC 1                 OK         40 degrees C / 104 degrees F
      FPC 2                 OK         38 degrees C / 100 degrees F
```

```
      FPC 4                  OK         34 degrees C / 93 degrees F
      FPC 5                  OK         43 degrees C / 109 degrees F
      FPC 6                  OK         41 degrees C / 105 degrees F
      FPC 7                  OK         43 degrees C / 109 degrees F
      FPM CMB                OK         28 degrees C / 82 degrees F
      FPM Display            OK         28 degrees C / 82 degrees F
Fans  Rear Bottom Blower     OK         Spinning at normal speed
      Rear Top Blower        OK         Spinning at normal speed
      Front Top Blower       OK         Spinning at normal speed
      Fan Tray Rear Left     OK         Spinning at normal speed
      Fan Tray Rear Right    OK         Spinning at normal speed
      Fan Tray Front Left    OK         Spinning at normal speed
      Fan Tray Front Right   OK         Spinning at normal speed
Misc  CIP                    OK
```

show chassis environment (M120 Router)

```
user@host> show chassis environment
Class Item                          Status     Measurement
Temp  PEM 0                         OK
      PEM 1                         OK
      Routing Engine 0              OK         43 degrees C / 109 degrees F
      Routing Engine 1              OK         44 degrees C / 111 degrees F
      CB 0 Intake                   OK         33 degrees C / 91 degrees F
      CB 0 Exhaust A                OK         36 degrees C / 96 degrees F
      CB 0 Exhaust B                OK         35 degrees C / 95 degrees F
      CB 1 Intake                   OK         34 degrees C / 93 degrees F
      CB 1 Exhaust A                OK         38 degrees C / 100 degrees F
      CB 1 Exhaust B                OK         35 degrees C / 95 degrees F
      FEB 3 Intake                  OK         35 degrees C / 95 degrees F
      FEB 3 Exhaust A               OK         37 degrees C / 98 degrees F
      FEB 3 Exhaust B               OK         39 degrees C / 102 degrees F
      FEB 4 Intake                  OK         33 degrees C / 91 degrees F
      FEB 4 Exhaust A               OK         39 degrees C / 102 degrees F
      FEB 4 Exhaust B               OK         36 degrees C / 96 degrees F
      FPC 2 Exhaust A               OK         32 degrees C / 89 degrees F
      FPC 2 Exhaust B               OK         31 degrees C / 87 degrees F
      FPC 3 Exhaust A               OK         32 degrees C / 89 degrees F
      FPC 3 Exhaust B               OK         33 degrees C / 91 degrees F
      FPC 4 Exhaust A               OK         32 degrees C / 89 degrees F
      FPC 4 Exhaust B               OK         30 degrees C / 86 degrees F
Fans  Front Top Tray Fan 1          OK         Spinning at normal speed
      Front Top Tray Fan 2          OK         Spinning at normal speed
      Front Top Tray Fan 3          OK         Spinning at normal speed
      Front Top Tray Fan 4          OK         Spinning at normal speed
      Front Top Tray Fan 5          OK         Spinning at normal speed
      Front Top Tray Fan 6          OK         Spinning at normal speed
      Front Top Tray Fan 7          OK         Spinning at normal speed
      Front Top Tray Fan 8          OK         Spinning at normal speed
      Front Bottom Tray Fan 1       OK         Spinning at normal speed
      Front Bottom Tray Fan 2       OK         Spinning at normal speed
      Front Bottom Tray Fan 3       OK         Spinning at normal speed
      Front Bottom Tray Fan 4       OK         Spinning at normal speed
      Front Bottom Tray Fan 5       OK         Spinning at normal speed
      Front Bottom Tray Fan 6       OK         Spinning at normal speed
      Front Bottom Tray Fan 7       OK         Spinning at normal speed
      Front Bottom Tray Fan 8       OK         Spinning at normal speed
      Rear Top Tray Fan 1           OK         Spinning at normal speed
      Rear Top Tray Fan 2           OK         Spinning at normal speed
      Rear Top Tray Fan 3           OK         Spinning at normal speed
```

```
      Rear Top Tray Fan 4            OK         Spinning at normal speed
      Rear Top Tray Fan 5            OK         Spinning at normal speed
      Rear Top Tray Fan 6            OK         Spinning at normal speed
      Rear Top Tray Fan 7            OK         Spinning at normal speed
      Rear Top Tray Fan 8            OK         Spinning at normal speed
      Rear Bottom Tray Fan 1         OK         Spinning at normal speed
      Rear Bottom Tray Fan 2         OK         Spinning at normal speed
      Rear Bottom Tray Fan 3         OK         Spinning at normal speed
      Rear Bottom Tray Fan 4         OK         Spinning at normal speed
      Rear Bottom Tray Fan 5         OK         Spinning at normal speed
      Rear Bottom Tray Fan 6         OK         Spinning at normal speed
      Rear Bottom Tray Fan 7         OK         Spinning at normal speed
      Rear Bottom Tray Fan 8         OK         Spinning at normal speed
```

show chassis environment (M160 Router)

```
user@host> show chassis environment
Class Item                   Status     Measurement
Power PEM 0                  OK           PEM 1                  Absent
Temp  PCG 0                  OK         45 degrees C / 113 degrees F
      PCG 1                  Absent
      Routing Engine 0       OK         35 degrees C / 95 degrees F
      Routing Engine 1       Absent
      MCS 0                  OK         50 degrees C / 122 degrees F
      SFM 0 SPP              OK         47 degrees C / 116 degrees F
      SFM 0 SPR              OK         49 degrees C / 120 degrees F
      SFM 1 SPP              OK         50 degrees C / 122 degrees F
      SFM 1 SPR              OK         50 degrees C / 122 degrees F
      SFM 2 SPP              OK         51 degrees C / 123 degrees F
      SFM 2 SPR              OK         52 degrees C / 125 degrees F
      SFM 3 SPP              OK         52 degrees C / 125 degrees F
      SFM 3 SPR              OK         48 degrees C / 118 degrees F
      FPC 0                  OK         45 degrees C / 113 degrees F
      FPC 6                  OK         43 degrees C / 109 degrees F
      FPM CMB                OK         31 degrees C / 87 degrees F
      FPM Display            OK         33 degrees C / 91 degrees F
Fans  Rear Bottom Blower     OK         Spinning at normal speed
      Rear Top Blower        OK         Spinning at normal speed
      Front Top Blower       OK         Spinning at normal speed
      Fan Tray Rear Left     OK         Spinning at normal speed
      Fan Tray Rear Right    OK         Spinning at normal speed
      Fan Tray Front Left    OK         Spinning at normal speed
      Fan Tray Front Right   OK         Spinning at normal speed
Misc  CIP                    OK
```

show chassis environment (M320 Router)

```
user@host> show chassis environment
Class Item                   Status     Measurement
Temp  PEM 0                  Absent
      PEM 1                  Absent
      PEM 2                  OK
      PEM 3                  OK
      Routing Engine 0       OK         33 degrees C / 91 degrees F
      Routing Engine 1       OK         32 degrees C / 89 degrees F
      CB 0                   OK         36 degrees C / 96 degrees F
      CB 1                   OK         36 degrees C / 96 degrees F
      SIB 0                  OK         38 degrees C / 100 degrees F
      SIB 1                  OK         29 degrees C / 84 degrees F
```

```
      SIB 2                  OK         38 degrees C / 100 degrees F
      SIB 3                  OK         41 degrees C / 105 degrees F
      FPC 0 Intake           OK         28 degrees C / 82 degrees F
      FPC 0 Exhaust          OK         40 degrees C / 104 degrees F
      FPC 1 Intake           OK         29 degrees C / 84 degrees F
      FPC 1 Exhaust          OK         39 degrees C / 102 degrees F
      FPC 2 Intake           OK         28 degrees C / 82 degrees F
      FPC 2 Exhaust          OK         38 degrees C / 100 degrees F
      FPC 3 Intake           OK         28 degrees C / 82 degrees F
      FPC 3 Exhaust          OK         39 degrees C / 102 degrees F
      FPC 6 Intake           OK         27 degrees C / 80 degrees F
      FPC 6 Exhaust          OK         39 degrees C / 102 degrees F
      FPC 7 Intake           OK         27 degrees C / 80 degrees F
      FPC 7 Exhaust          OK         42 degrees C / 107 degrees F
      FPM GBUS               OK         30 degrees C / 86 degrees F
Fan   Top Left Front fan     OK         Spinning at normal speed
      Top Right Rear fan     OK         Spinning at normal speed
      Top Right Front fan    OK         Spinning at normal speed
      Top Left Rear fan      OK         Spinning at normal speed
      Bottom Left Front fan  OK         Spinning at normal speed
      Bottom Right Rear fan  OK         Spinning at normal speed
      Bottom Right Front fan OK         Spinning at normal speed
      Bottom Left Rear fan   OK         Spinning at normal speed
      Rear Fan 1 (TOP)       OK         Spinning at normal speed
      Rear Fan 2             OK         Spinning at normal speed
      Rear Fan 3             OK         Spinning at normal speed
      Rear Fan 4             OK         Spinning at normal speed
      Rear Fan 5             OK         Spinning at normal speed
      Rear Fan 6             OK         Spinning at normal speed
      Rear Fan 7 (Bottom)    OK         Spinning at normal speed
Misc  CIP                    OK
```

show chassis environment (MX150)

```
user@host> show chassis environment
Class Item                          Status     Measurement
Power FPC 0 Power Supply 0          OK
Temp  FPC 0 Sensor 1                OK         42 degrees C / 107 degrees F
      FPC 0 Sensor 2                OK         39 degrees C / 102 degrees F
      FPC 0 Coretemp                OK         75 degrees C / 167 degrees F
Fans  FPC 0 Fan Tray 0              OK         Spinning at normal speed
      FPC 0 Fan Tray 1              OK         Spinning at normal speed
```

show chassis environment (MX104 Router)

```
user@host> show chassis environment
Class Item                          Status     Measurement
Temp  PEM 0                         OK         34 degrees C / 93 degrees F
      PEM 1                         Absent
      ABB 0 Intake                  OK         33 degrees C / 91 degrees F
      ABB 0 Exhaust A               OK         42 degrees C / 107 degrees F
      ABB 0 Exhaust B               OK         43 degrees C / 109 degrees F
      ABB 1 Intake                  Absent
      ABB 1 Exhaust A               Absent
      ABB 1 Exhaust B               Absent
      Routing Engine 0              OK         34 degrees C / 93 degrees F
      Routing Engine 0 CPU          OK         46 degrees C / 114 degrees F
      Routing Engine 1              Absent
      Routing Engine 1 CPU          Absent
```

```
      AFEB 0 AFEB Processor          OK         33 degrees C / 91 degrees F
Fans  Fan 1                          OK         Spinning at normal speed
      Fan 2                          OK         Spinning at normal speed
      Fan 3                          OK         Spinning at normal speed
      Fan 4                          OK         Spinning at normal speed
      Fan 5                          OK         Spinning at normal speed
```

show chassis environment (MX240 Router)

```
user@host> show chassis environment
Class Item                           Status     Measurement
Temp  PEM 0                          OK         40 degrees C / 104 degrees F
      PEM 1                          OK         45 degrees C / 113 degrees F
      PEM 2                          Absent
      PEM 3                          Absent
      Routing Engine 0               OK         39 degrees C / 102 degrees F
      Routing Engine 1               OK         37 degrees C / 98 degrees F
      CB 0 Intake                    OK         36 degrees C / 96 degrees F
      CB 0 Exhaust A                 OK         34 degrees C / 93 degrees F
      CB 0 Exhaust B                 OK         38 degrees C / 100 degrees F
      CB 0 ACBC                      OK         37 degrees C / 98 degrees F
      CB 0 SF A                      OK         49 degrees C / 120 degrees F
      CB 0 SF B                      OK         41 degrees C / 105 degrees F
      CB 1 Intake                    OK         37 degrees C / 98 degrees F
      CB 1 Exhaust A                 OK         34 degrees C / 93 degrees F
      CB 1 Exhaust B                 OK         39 degrees C / 102 degrees F
      CB 1 ACBC                      OK         38 degrees C / 100 degrees F
      CB 1 SF A                      OK         47 degrees C / 116 degrees F
      CB 1 SF B                      OK         41 degrees C / 105 degrees F
      FPC 1 Intake                   OK         33 degrees C / 91 degrees F
      FPC 1 Exhaust A                OK         38 degrees C / 100 degrees F
      FPC 1 Exhaust B                OK         53 degrees C / 127 degrees F
      FPC 1 I3 0 TSensor             OK         50 degrees C / 122 degrees F
      FPC 1 I3 0 Chip                OK         53 degrees C / 127 degrees F
      FPC 1 I3 1 TSensor             OK         49 degrees C / 120 degrees F
      FPC 1 I3 1 Chip                OK         52 degrees C / 125 degrees F
      FPC 1 I3 2 TSensor             OK         47 degrees C / 116 degrees F
      FPC 1 I3 2 Chip                OK         49 degrees C / 120 degrees F
      FPC 1 I3 3 TSensor             OK         44 degrees C / 111 degrees F
      FPC 1 I3 3 Chip                OK         46 degrees C / 114 degrees F
      FPC 1 IA 0 TSensor             OK         45 degrees C / 113 degrees F
      FPC 1 IA 0 Chip                OK         44 degrees C / 111 degrees F
      FPC 1 IA 1 TSensor             OK         44 degrees C / 111 degrees F
      FPC 1 IA 1 Chip                OK         48 degrees C / 118 degrees F
      FPC 2 Intake                   OK         32 degrees C / 89 degrees F
      FPC 2 Exhaust A                OK         40 degrees C / 104 degrees F
      FPC 2 Exhaust B                OK         52 degrees C / 125 degrees F
      FPC 2 I3 0 TSensor             OK         52 degrees C / 125 degrees F
      FPC 2 I3 0 Chip                OK         56 degrees C / 132 degrees F
      FPC 2 I3 1 TSensor             OK         52 degrees C / 125 degrees F
      FPC 2 I3 1 Chip                OK         55 degrees C / 131 degrees F
      FPC 2 I3 2 TSensor             OK         49 degrees C / 120 degrees F
      FPC 2 I3 2 Chip                OK         52 degrees C / 125 degrees F
      FPC 2 I3 3 TSensor             OK         44 degrees C / 111 degrees F
      FPC 2 I3 3 Chip                OK         48 degrees C / 118 degrees F
      FPC 2 IA 0 TSensor             OK         50 degrees C / 122 degrees F
      FPC 2 IA 0 Chip                OK         48 degrees C / 118 degrees F
      FPC 2 IA 1 TSensor             OK         47 degrees C / 116 degrees F
      FPC 2 IA 1 Chip                OK         53 degrees C / 127 degrees F
Fans  Front Fan                      OK         Spinning at normal speed
```

```
      Middle Fan                      OK         Spinning at normal speed
      Rear Fan                        OK         Spinning at normal speed
```

show chassis environment (MX240 Router with SCBE)

```
user@host> show chassis environment
Class Item                            Status     Measurement
Temp  PEM 0                           OK         40 degrees C / 104 degrees F
      PEM 1                           OK         45 degrees C / 113 degrees F
      PEM 2                           Absent
      PEM 3                           Absent
      Routing Engine 0                OK         39 degrees C / 102 degrees F
      Routing Engine 1                OK         37 degrees C / 98 degrees F
      CB 0 Intake                     OK         36 degrees C / 96 degrees F
      CB 0 Exhaust A                  OK         34 degrees C / 93 degrees F
      CB 0 Exhaust B                  OK         38 degrees C / 100 degrees F
      CB 0 ACBC                       OK         37 degrees C / 98 degrees F
      CB 0 XF A                       OK         49 degrees C / 120 degrees F
      CB 0 XF B                       OK         41 degrees C / 105 degrees F
      CB 1 Intake                     OK         37 degrees C / 98 degrees F
      CB 1 Exhaust A                  OK         34 degrees C / 93 degrees F
      CB 1 Exhaust B                  OK         39 degrees C / 102 degrees F
      CB 1 ACBC                       OK         38 degrees C / 100 degrees F
      CB 1 XF A                       OK         47 degrees C / 116 degrees F
      CB 1 XF B                       OK         41 degrees C / 105 degrees F
      FPC 1 Intake                    OK         33 degrees C / 91 degrees F
      FPC 1 Exhaust A                 OK         38 degrees C / 100 degrees F
      FPC 1 Exhaust B                 OK         53 degrees C / 127 degrees F
      FPC 1 I3 0 TSensor              OK         50 degrees C / 122 degrees F
      FPC 1 I3 0 Chip                 OK         53 degrees C / 127 degrees F
      FPC 1 I3 1 TSensor              OK         49 degrees C / 120 degrees F
      FPC 1 I3 1 Chip                 OK         52 degrees C / 125 degrees F
      FPC 1 I3 2 TSensor              OK         47 degrees C / 116 degrees F
      FPC 1 I3 2 Chip                 OK         49 degrees C / 120 degrees F
      FPC 1 I3 3 TSensor              OK         44 degrees C / 111 degrees F
      FPC 1 I3 3 Chip                 OK         46 degrees C / 114 degrees F
      FPC 1 IA 0 TSensor              OK         45 degrees C / 113 degrees F
      FPC 1 IA 0 Chip                 OK         44 degrees C / 111 degrees F
      FPC 1 IA 1 TSensor              OK         44 degrees C / 111 degrees F
      FPC 1 IA 1 Chip                 OK         48 degrees C / 118 degrees F
      FPC 2 Intake                    OK         32 degrees C / 89 degrees F
      FPC 2 Exhaust A                 OK         40 degrees C / 104 degrees F
      FPC 2 Exhaust B                 OK         52 degrees C / 125 degrees F
      FPC 2 I3 0 TSensor              OK         52 degrees C / 125 degrees F
      FPC 2 I3 0 Chip                 OK         56 degrees C / 132 degrees F
      FPC 2 I3 1 TSensor              OK         52 degrees C / 125 degrees F
      FPC 2 I3 1 Chip                 OK         55 degrees C / 131 degrees F
      FPC 2 I3 2 TSensor              OK         49 degrees C / 120 degrees F
      FPC 2 I3 2 Chip                 OK         52 degrees C / 125 degrees F
      FPC 2 I3 3 TSensor              OK         44 degrees C / 111 degrees F
      FPC 2 I3 3 Chip                 OK         48 degrees C / 118 degrees F
      FPC 2 IA 0 TSensor              OK         50 degrees C / 122 degrees F
      FPC 2 IA 0 Chip                 OK         48 degrees C / 118 degrees F
      FPC 2 IA 1 TSensor              OK         47 degrees C / 116 degrees F
      FPC 2 IA 1 Chip                 OK         53 degrees C / 127 degrees F
Fans  Front Fan                       OK         Spinning at normal speed
      Middle Fan                      OK         Spinning at normal speed
      Rear Fan                        OK         Spinning at normal speed
```

show chassis environment (MX480 Router)

```
user@host> show chassis environment
Class Item                          Status     Measurement
Temp  PEM 0                         OK         35 degrees C / 95 degrees F
      PEM 1                         OK         40 degrees C / 104 degrees F
      PEM 2                         Absent
      PEM 3                         Absent
      Routing Engine 0              OK         44 degrees C / 111 degrees F
      Routing Engine 1              OK         45 degrees C / 113 degrees F
      CB 0 Intake                   OK         36 degrees C / 96 degrees F
      CB 0 Exhaust A                OK         38 degrees C / 100 degrees F
      CB 0 Exhaust B                OK         39 degrees C / 102 degrees F
      CB 0 ACBC                     OK         37 degrees C / 98 degrees F
      CB 0 SF A                     OK         51 degrees C / 123 degrees F
      CB 0 SF B                     OK         44 degrees C / 111 degrees F
      CB 1 Intake                   OK         36 degrees C / 96 degrees F
      CB 1 Exhaust A                OK         39 degrees C / 102 degrees F
      CB 1 Exhaust B                OK         40 degrees C / 104 degrees F
      CB 1 ACBC                     OK         37 degrees C / 98 degrees F
      CB 1 SF A                     OK         50 degrees C / 122 degrees F
      CB 1 SF B                     OK         43 degrees C / 109 degrees F
      FPC 0 Intake                  OK         36 degrees C / 96 degrees F
      FPC 0 Exhaust A               OK         39 degrees C / 102 degrees F
      FPC 0 Exhaust B               OK         51 degrees C / 123 degrees F
      FPC 0 I3 0 TSensor            OK         49 degrees C / 120 degrees F
      FPC 0 I3 0 Chip               OK         56 degrees C / 132 degrees F
      FPC 0 I3 1 TSensor            OK         47 degrees C / 116 degrees F
      FPC 0 I3 1 Chip               OK         52 degrees C / 125 degrees F
      FPC 0 I3 2 TSensor            OK         46 degrees C / 114 degrees F
      FPC 0 I3 2 Chip               OK         48 degrees C / 118 degrees F
      FPC 0 I3 3 TSensor            OK         42 degrees C / 107 degrees F
      FPC 0 I3 3 Chip               OK         45 degrees C / 113 degrees F
      FPC 0 IA 0 TSensor            OK         45 degrees C / 113 degrees F
      FPC 0 IA 0 Chip               OK         45 degrees C / 113 degrees F
      FPC 0 IA 1 TSensor            OK         44 degrees C / 111 degrees F
      FPC 0 IA 1 Chip               OK         48 degrees C / 118 degrees F
      FPC 1 Intake                  OK         37 degrees C / 98 degrees F
      FPC 1 Exhaust A               OK         41 degrees C / 105 degrees F
      FPC 1 Exhaust B               OK         52 degrees C / 125 degrees F
      FPC 1 I3 0 TSensor            OK         51 degrees C / 123 degrees F
      FPC 1 I3 0 Chip               OK         57 degrees C / 134 degrees F
      FPC 1 I3 1 TSensor            OK         48 degrees C / 118 degrees F
      FPC 1 I3 1 Chip               OK         52 degrees C / 125 degrees F
      FPC 1 I3 2 TSensor            OK         46 degrees C / 114 degrees F
      FPC 1 I3 2 Chip               OK         50 degrees C / 122 degrees F
      FPC 1 I3 3 TSensor            OK         42 degrees C / 107 degrees F
      FPC 1 I3 3 Chip               OK         46 degrees C / 114 degrees F
      FPC 1 IA 0 TSensor            OK         49 degrees C / 120 degrees F
      FPC 1 IA 0 Chip               OK         48 degrees C / 118 degrees F
      FPC 1 IA 1 TSensor            OK         46 degrees C / 114 degrees F
      FPC 1 IA 1 Chip               OK         50 degrees C / 122 degrees F
Fans  Top Rear Fan                  OK         Spinning at normal speed
      Bottom Rear Fan               OK         Spinning at normal speed
      Top Middle Fan                OK         Spinning at normal speed
      Bottom Middle Fan             OK         Spinning at normal speed
      Top Front Fan                 OK         Spinning at normal speed
      Bottom Front Fan              OK         Spinning at normal speed
```

show chassis environment (MX480 Router with SCBE)

```
user@host> show chassis environment
Class Item                          Status     Measurement
Temp  PEM 0                         OK         35 degrees C / 95 degrees F
      PEM 1                         OK         40 degrees C / 104 degrees F
      PEM 2                         Absent
      PEM 3                         Absent
      Routing Engine 0              OK         44 degrees C / 111 degrees F
      Routing Engine 1              OK         45 degrees C / 113 degrees F
      CB 0 Intake                   OK         36 degrees C / 96 degrees F
      CB 0 Exhaust A                OK         38 degrees C / 100 degrees F
      CB 0 Exhaust B                OK         39 degrees C / 102 degrees F
      CB 0 ACBC                     OK         37 degrees C / 98 degrees F
      CB 0 XF A                     OK         51 degrees C / 123 degrees F
      CB 0 XF B                     OK         44 degrees C / 111 degrees F
      CB 1 Intake                   OK         36 degrees C / 96 degrees F
      CB 1 Exhaust A                OK         39 degrees C / 102 degrees F
      CB 1 Exhaust B                OK         40 degrees C / 104 degrees F
      CB 1 ACBC                     OK         37 degrees C / 98 degrees F
      CB 1 XF A                     OK         50 degrees C / 122 degrees F
      CB 1 XF B                     OK         43 degrees C / 109 degrees F
      FPC 0 Intake                  OK         36 degrees C / 96 degrees F
      FPC 0 Exhaust A               OK         39 degrees C / 102 degrees F
      FPC 0 Exhaust B               OK         51 degrees C / 123 degrees F
      FPC 0 I3 0 TSensor            OK         49 degrees C / 120 degrees F
      FPC 0 I3 0 Chip               OK         56 degrees C / 132 degrees F
      FPC 0 I3 1 TSensor            OK         47 degrees C / 116 degrees F
      FPC 0 I3 1 Chip               OK         52 degrees C / 125 degrees F
      FPC 0 I3 2 TSensor            OK         46 degrees C / 114 degrees F
      FPC 0 I3 2 Chip               OK         48 degrees C / 118 degrees F
      FPC 0 I3 3 TSensor            OK         42 degrees C / 107 degrees F
      FPC 0 I3 3 Chip               OK         45 degrees C / 113 degrees F
      FPC 0 IA 0 TSensor            OK         45 degrees C / 113 degrees F
      FPC 0 IA 0 Chip               OK         45 degrees C / 113 degrees F
      FPC 0 IA 1 TSensor            OK         44 degrees C / 111 degrees F
      FPC 0 IA 1 Chip               OK         48 degrees C / 118 degrees F
      FPC 1 Intake                  OK         37 degrees C / 98 degrees F
      FPC 1 Exhaust A               OK         41 degrees C / 105 degrees F
      FPC 1 Exhaust B               OK         52 degrees C / 125 degrees F
      FPC 1 I3 0 TSensor            OK         51 degrees C / 123 degrees F
      FPC 1 I3 0 Chip               OK         57 degrees C / 134 degrees F
      FPC 1 I3 1 TSensor            OK         48 degrees C / 118 degrees F
      FPC 1 I3 1 Chip               OK         52 degrees C / 125 degrees F
      FPC 1 I3 2 TSensor            OK         46 degrees C / 114 degrees F
      FPC 1 I3 2 Chip               OK         50 degrees C / 122 degrees F
      FPC 1 I3 3 TSensor            OK         42 degrees C / 107 degrees F
      FPC 1 I3 3 Chip               OK         46 degrees C / 114 degrees F
      FPC 1 IA 0 TSensor            OK         49 degrees C / 120 degrees F
      FPC 1 IA 0 Chip               OK         48 degrees C / 118 degrees F
      FPC 1 IA 1 TSensor            OK         46 degrees C / 114 degrees F
      FPC 1 IA 1 Chip               OK         50 degrees C / 122 degrees F
Fans  Top Rear Fan                  OK         Spinning at normal speed
      Bottom Rear Fan               OK         Spinning at normal speed
      Top Middle Fan                OK         Spinning at normal speed
      Bottom Middle Fan             OK         Spinning at normal speed
      Top Front Fan                 OK         Spinning at normal speed
      Bottom Front Fan              OK         Spinning at normal speed
```

show chassis environment (MX960 Router)

```
user@host> show chassis environment
Class Item                          Status     Measurement
Temp  PEM 0                         Absent
      PEM 1                         Absent
      PEM 2                         Check
      PEM 3                         OK         35 degrees C / 95 degrees F
      Routing Engine 0              OK         37 degrees C / 98 degrees F
      Routing Engine 1              Absent
      CB 0 Intake                   OK         24 degrees C / 75 degrees F
      CB 0 Exhaust A                OK         30 degrees C / 86 degrees F
      CB 0 Exhaust B                OK         27 degrees C / 80 degrees F
      CB 1 Intake                   Absent
      CB 1 Exhaust A                Absent
      CB 1 Exhaust B                Absent
      CB 1 ACBC                     Absent
      CB 1 SF A                     Absent
      CB 1 SF B                     Absent
      CB 2 Intake                   Absent
      CB 2 Exhaust A                Absent
      CB 2 Exhaust B                Absent
      CB 2 ACBC                     Absent
      CB 2 SF A                     Absent
      CB 2 SF B                     Absent
      FPC 4 Intake                  OK         24 degrees C / 75 degrees F
      FPC 4 Exhaust A               OK         36 degrees C / 96 degrees F
      FPC 4 Exhaust B               OK         38 degrees C / 100 degrees F
      FPC 7 Intake                  OK         24 degrees C / 75 degrees F
      FPC 7 Exhaust A               OK         36 degrees C / 96 degrees F
      FPC 7 Exhaust B               OK         42 degrees C / 107 degrees F
Fans  Top Fan Tray Temp             Failed
      Top Tray Fan 1                OK         Spinning at normal speed
      Top Tray Fan 2                OK         Spinning at normal speed
      Top Tray Fan 3                OK         Spinning at normal speed
      Top Tray Fan 4                OK         Spinning at normal speed
      Top Tray Fan 5                OK         Spinning at normal speed
      Top Tray Fan 6                OK         Spinning at normal speed
      Bottom Fan Tray Temp          Failed
      Bottom Tray Fan 1             OK         Spinning at normal speed
      Bottom Tray Fan 2             OK         Spinning at normal speed
      Bottom Tray Fan 3             OK         Spinning at normal speed
      Bottom Tray Fan 4             OK         Spinning at normal speed
      Bottom Tray Fan 5             OK         Spinning at normal speed
      Bottom Tray Fan 6             OK         Spinning at normal speed
```

show chassis environment (MX960 Router with SCBE)

```
user@host> show chassis environment
Class Item                          Status     Measurement
Temp  PEM 0                         Absent
      PEM 1                         OK         50 degrees C / 122 degrees F
      PEM 2                         OK         50 degrees C / 122 degrees F
      PEM 3                         OK         50 degrees C / 122 degrees F
      Routing Engine 0              OK         42 degrees C / 107 degrees F
      Routing Engine 0 CPU          OK         51 degrees C / 123 degrees F
      Routing Engine 1              OK         39 degrees C / 102 degrees F
      Routing Engine 1 CPU          OK         44 degrees C / 111 degrees F
      CB 0 Intake                   OK         35 degrees C / 95 degrees F
      CB 0 Exhaust A                OK         36 degrees C / 96 degrees F
```

```
CB 0 Exhaust B                OK         43 degrees C / 109 degrees F
CB 0 ACBC                     OK         38 degrees C / 100 degrees F
CB 0 XF A                     OK         53 degrees C / 127 degrees F
CB 0 XF B                     OK         47 degrees C / 116 degrees F
CB 1 Intake                   OK         35 degrees C / 95 degrees F
CB 1 Exhaust A                OK         35 degrees C / 95 degrees F
CB 1 Exhaust B                OK         41 degrees C / 105 degrees F
CB 1 ACBC                     OK         38 degrees C / 100 degrees F
CB 1 XF A                     OK         52 degrees C / 125 degrees F
CB 1 XF B                     OK         47 degrees C / 116 degrees F
CB 2 Intake                   OK         32 degrees C / 89 degrees F
CB 2 Exhaust A                OK         30 degrees C / 86 degrees F
CB 2 Exhaust B                OK         35 degrees C / 95 degrees F
CB 2 ACBC                     OK         33 degrees C / 91 degrees F
CB 2 XF A                     OK         51 degrees C / 123 degrees F
CB 2 XF B                     OK         50 degrees C / 122 degrees F
FPC 0 Intake                  OK         35 degrees C / 95 degrees F
FPC 0 Exhaust A               OK         39 degrees C / 102 degrees F
FPC 0 Exhaust B               OK         50 degrees C / 122 degrees F
FPC 0 I3 0 TSensor            OK         50 degrees C / 122 degrees F
FPC 0 I3 0 Chip               OK         56 degrees C / 132 degrees F
FPC 0 I3 1 TSensor            OK         47 degrees C / 116 degrees F
FPC 0 I3 1 Chip               OK         50 degrees C / 122 degrees F
FPC 0 I3 2 TSensor            OK         45 degrees C / 113 degrees F
FPC 0 I3 2 Chip               OK         48 degrees C / 118 degrees F
FPC 0 I3 3 TSensor            OK         41 degrees C / 105 degrees F
FPC 0 I3 3 Chip               OK         44 degrees C / 111 degrees F
FPC 0 IA 0 TSensor            OK         45 degrees C / 113 degrees F
FPC 0 IA 0 Chip               OK         45 degrees C / 113 degrees F
FPC 0 IA 1 TSensor            OK         44 degrees C / 111 degrees F
FPC 0 IA 1 Chip               OK         48 degrees C / 118 degrees F
FPC 1 Intake                  OK         36 degrees C / 96 degrees F
FPC 1 Exhaust A               OK         47 degrees C / 116 degrees F
FPC 1 Exhaust B               OK         43 degrees C / 109 degrees F
FPC 1 LU 0 TCAM TSensor       OK         53 degrees C / 127 degrees F
FPC 1 LU 0 TCAM Chip          OK         57 degrees C / 134 degrees F
FPC 1 LU 0 TSensor            OK         53 degrees C / 127 degrees F
FPC 1 LU 0 Chip               OK         60 degrees C / 140 degrees F
FPC 1 MQ 0 TSensor            OK         53 degrees C / 127 degrees F
FPC 1 MQ 0 Chip               OK         56 degrees C / 132 degrees F
FPC 1 LU 1 TCAM TSensor       OK         51 degrees C / 123 degrees F
FPC 1 LU 1 TCAM Chip          OK         52 degrees C / 125 degrees F
FPC 1 LU 1 TSensor            OK         51 degrees C / 123 degrees F
FPC 1 LU 1 Chip               OK         53 degrees C / 127 degrees F
FPC 1 MQ 1 TSensor            OK         51 degrees C / 123 degrees F
FPC 1 MQ 1 Chip               OK         58 degrees C / 136 degrees F
FPC 2 Intake                  OK         35 degrees C / 95 degrees F
FPC 2 Exhaust A               OK         39 degrees C / 102 degrees F
FPC 2 Exhaust B               OK         54 degrees C / 129 degrees F
FPC 2 I3 0 TSensor            OK         52 degrees C / 125 degrees F
FPC 2 I3 0 Chip               OK         59 degrees C / 138 degrees F
FPC 2 I3 1 TSensor            OK         48 degrees C / 118 degrees F
FPC 2 I3 1 Chip               OK         52 degrees C / 125 degrees F
FPC 2 I3 2 TSensor            OK         47 degrees C / 116 degrees F
FPC 2 I3 2 Chip               OK         49 degrees C / 120 degrees F
FPC 2 I3 3 TSensor            OK         41 degrees C / 105 degrees F
FPC 2 I3 3 Chip               OK         44 degrees C / 111 degrees F
FPC 2 IA 0 TSensor            OK         47 degrees C / 116 degrees F
FPC 2 IA 0 Chip               OK         46 degrees C / 114 degrees F
FPC 2 IA 1 TSensor            OK         45 degrees C / 113 degrees F
FPC 2 IA 1 Chip               OK         49 degrees C / 120 degrees F
```

```
FPC 3 Intake                    OK          34 degrees C / 93 degrees F
FPC 3 Exhaust A                 OK          34 degrees C / 93 degrees F
FPC 3 Exhaust B                 OK          47 degrees C / 116 degrees F
FPC 3 I3 0 TSensor              OK          48 degrees C / 118 degrees F
FPC 3 I3 0 Chip                 OK          52 degrees C / 125 degrees F
FPC 3 I3 1 TSensor              OK          46 degrees C / 114 degrees F
FPC 3 I3 1 Chip                 OK          48 degrees C / 118 degrees F
FPC 3 IA 0 TSensor              OK          41 degrees C / 105 degrees F
FPC 3 IA 0 Chip                 OK          40 degrees C / 104 degrees F
FPC 5 Intake                    OK          42 degrees C / 107 degrees F
FPC 5 Exhaust A                 OK          42 degrees C / 107 degrees F
FPC 5 Exhaust B                 OK          53 degrees C / 127 degrees F
FPC 5 LU 0 TSensor              OK          53 degrees C / 127 degrees F
FPC 5 LU 0 Chip                 OK          54 degrees C / 129 degrees F
FPC 5 LU 1 TSensor              OK          53 degrees C / 127 degrees F
FPC 5 LU 1 Chip                 OK          61 degrees C / 141 degrees F
FPC 5 LU 2 TSensor              OK          53 degrees C / 127 degrees F
FPC 5 LU 2 Chip                 OK          51 degrees C / 123 degrees F
FPC 5 LU 3 TSensor              OK          53 degrees C / 127 degrees F
FPC 5 LU 3 Chip                 OK          53 degrees C / 127 degrees F
FPC 5 MQ 0 TSensor              OK          47 degrees C / 116 degrees F
FPC 5 MQ 0 Chip                 OK          52 degrees C / 125 degrees F
FPC 5 MQ 1 TSensor              OK          47 degrees C / 116 degrees F
FPC 5 MQ 1 Chip                 OK          52 degrees C / 125 degrees F
FPC 5 MQ 2 TSensor              OK          47 degrees C / 116 degrees F
FPC 5 MQ 2 Chip                 OK          46 degrees C / 114 degrees F
FPC 5 MQ 3 TSensor              OK          47 degrees C / 116 degrees F
FPC 5 MQ 3 Chip                 OK          45 degrees C / 113 degrees F
FPC 7 Intake                    OK          36 degrees C / 96 degrees F
FPC 7 Exhaust A                 OK          35 degrees C / 95 degrees F
FPC 7 Exhaust B                 OK          33 degrees C / 91 degrees F
FPC 7 QX 0 TSensor              OK          42 degrees C / 107 degrees F
FPC 7 QX 0 Chip                 OK          47 degrees C / 116 degrees F
FPC 7 LU 0 TCAM TSensor         OK          42 degrees C / 107 degrees F
FPC 7 LU 0 TCAM Chip            OK          44 degrees C / 111 degrees F
FPC 7 LU 0 TSensor              OK          42 degrees C / 107 degrees F
FPC 7 LU 0 Chip                 OK          46 degrees C / 114 degrees F
FPC 7 MQ 0 TSensor              OK          42 degrees C / 107 degrees F
FPC 7 MQ 0 Chip                 OK          45 degrees C / 113 degrees F
FPC 8 Intake                    OK          33 degrees C / 91 degrees F
FPC 8 Exhaust A                 OK          33 degrees C / 91 degrees F
FPC 8 Exhaust B                 OK          36 degrees C / 96 degrees F
FPC 8 I3 0 TSensor              OK          38 degrees C / 100 degrees F
FPC 8 I3 0 Chip                 OK          43 degrees C / 109 degrees F
FPC 8 BDS 0 TSensor             OK          37 degrees C / 98 degrees F
FPC 8 BDS 0 Chip                OK          36 degrees C / 96 degrees F
FPC 8 IA 0 TSensor              OK          37 degrees C / 98 degrees F
FPC 8 IA 0 Chip                 OK          37 degrees C / 98 degrees F
FPC 10 Intake                   OK          38 degrees C / 100 degrees F
FPC 10 Exhaust A                OK          36 degrees C / 96 degrees F
FPC 10 Exhaust B                OK          41 degrees C / 105 degrees F
FPC 10 I3 0 TSensor             OK          40 degrees C / 104 degrees F
FPC 10 I3 0 Chip                OK          42 degrees C / 107 degrees F
FPC 10 I3 1 TSensor             OK          40 degrees C / 104 degrees F
FPC 10 I3 1 Chip                OK          44 degrees C / 111 degrees F
FPC 10 I3 2 TSensor             OK          42 degrees C / 107 degrees F
FPC 10 I3 2 Chip                OK          43 degrees C / 109 degrees F
FPC 10 I3 3 TSensor             OK          39 degrees C / 102 degrees F
FPC 10 I3 3 Chip                OK          44 degrees C / 111 degrees F
FPC 10 IA 0 TSensor             OK          36 degrees C / 96 degrees F
FPC 10 IA 0 Chip                OK          36 degrees C / 96 degrees F
```

```
      FPC 10 IA 1 TSensor          OK        43 degrees C / 109 degrees F
      FPC 10 IA 1 Chip             OK        42 degrees C / 107 degrees F
Fans  Top Fan Tray Temp            OK        37 degrees C / 98 degrees F
      Top Tray Fan 1               OK        Spinning at normal speed
      Top Tray Fan 2               OK        Spinning at normal speed
      Top Tray Fan 3               OK        Spinning at normal speed
      Top Tray Fan 4               OK        Spinning at normal speed
      Top Tray Fan 5               OK        Spinning at normal speed
      Top Tray Fan 6               OK        Spinning at normal speed
      Bottom Fan Tray Temp         OK        28 degrees C / 82 degrees F
      Bottom Tray Fan 1            OK        Spinning at normal speed
      Bottom Tray Fan 2            OK        Spinning at normal speed
      Bottom Tray Fan 3            OK        Spinning at normal speed
      Bottom Tray Fan 4            OK        Spinning at normal speed
      Bottom Tray Fan 5            OK        Spinning at normal speed
      Bottom Tray Fan 6            OK        Spinning at normal speed
```

show chassis environment (MX960 Router with MPC5EQ)

```
user@host> show chassis environment
Class Item                         Status    Measurement
Temp  PEM 0                        OK        50 degrees C / 122 degrees F
      PEM 1                        OK        45 degrees C / 113 degrees F
      PEM 2                        OK        45 degrees C / 113 degrees F
      PEM 3                        Absent
      Routing Engine 0             OK        31 degrees C / 87 degrees F
      Routing Engine 0 CPU         OK        30 degrees C / 86 degrees F
      Routing Engine 1             Present
      Routing Engine 1 CPU         Present
      CB 0 Intake                  OK        29 degrees C / 84 degrees F
      CB 0 Exhaust A               OK        29 degrees C / 84 degrees F
      CB 0 Exhaust B               OK        34 degrees C / 93 degrees F
      CB 0 ACBC                    OK        32 degrees C / 89 degrees F
      CB 0 XF A                    OK        49 degrees C / 120 degrees F
      CB 0 XF B                    OK        45 degrees C / 113 degrees F
      CB 1 Intake                  OK        26 degrees C / 78 degrees F
      CB 1 Exhaust A               OK        26 degrees C / 78 degrees F
      CB 1 Exhaust B               OK        27 degrees C / 80 degrees F
      CB 1 ACBC                    OK        26 degrees C / 78 degrees F
      CB 1 XF A                    OK        32 degrees C / 89 degrees F
      CB 1 XF B                    OK        32 degrees C / 89 degrees F
      CB 2 Intake                  OK        28 degrees C / 82 degrees F
      CB 2 Exhaust A               OK        27 degrees C / 80 degrees F
      CB 2 Exhaust B               OK        33 degrees C / 91 degrees F
      CB 2 ACBC                    OK        30 degrees C / 86 degrees F
      CB 2 XF A                    OK        48 degrees C / 118 degrees F
      CB 2 XF B                    OK        46 degrees C / 114 degrees F
      FPC 0 Intake                 OK        38 degrees C / 100 degrees F
      FPC 0 Exhaust A              OK        48 degrees C / 118 degrees F
      FPC 0 Exhaust B              OK        49 degrees C / 120 degrees F
      FPC 0 XL TSen                OK        48 degrees C / 118 degrees F
      FPC 0 XL Chip                OK        50 degrees C / 122 degrees F
      FPC 0 XL_XR0 TSen            OK        48 degrees C / 118 degrees F
      FPC 0 XL_XR0 Chip            OK        53 degrees C / 127 degrees F
      FPC 0 XL_XR1 TSen            OK        48 degrees C / 118 degrees F
      FPC 0 XL_XR1 Chip            OK        54 degrees C / 129 degrees F
      FPC 0 XQ TSen                OK        48 degrees C / 118 degrees F
      FPC 0 XQ Chip                OK        52 degrees C / 125 degrees F
      FPC 0 XQ_XR0 TSen            OK        48 degrees C / 118 degrees F
      FPC 0 XQ_XR0 Chip            OK        62 degrees C / 143 degrees F
      FPC 0 XQ_XR1 TSen            OK        48 degrees C / 118 degrees F
```

```
     FPC 0 XQ_XR1 Chip              OK         62 degrees C / 143 degrees F
     FPC 0 XM 0 TSen                OK         53 degrees C / 127 degrees F
     FPC 0 XM 0 Chip                OK         63 degrees C / 145 degrees F
     FPC 0 XM 1 TSen                OK         53 degrees C / 127 degrees F
     FPC 0 XM 1 Chip                OK         46 degrees C / 114 degrees F
     FPC 0 PLX PCIe Switch TSe      OK         53 degrees C / 127 degrees F
     FPC 0 PLX PCIe Switch Chi      OK         66 degrees C / 150 degrees F
     FPC 1 Intake                   OK         31 degrees C / 87 degrees F
     FPC 1 Exhaust A                OK         38 degrees C / 100 degrees F
     FPC 1 Exhaust B                OK         49 degrees C / 120 degrees F
     FPC 1 LU 0 TSen                OK         41 degrees C / 105 degrees F
     FPC 1 LU 0 Chip                OK         47 degrees C / 116 degrees F
     FPC 1 LU 1 TSen                OK         41 degrees C / 105 degrees F
FPC 1 LU 1 Chip                OK         42 degrees C / 107 degrees F
     FPC 1 LU 2 TSen                OK         41 degrees C / 105 degrees F
     FPC 1 LU 2 Chip                OK         46 degrees C / 114 degrees F
     FPC 1 LU 3 TSen                OK         41 degrees C / 105 degrees F
     FPC 1 LU 3 Chip                OK         51 degrees C / 123 degrees F
     FPC 1 XM 0 TSen                OK         41 degrees C / 105 degrees F
     FPC 1 XM 0 Chip                OK         49 degrees C / 120 degrees F
     FPC 1 XF 0 TSen                OK         41 degrees C / 105 degrees F
     FPC 1 XF 0 Chip                OK         63 degrees C / 145 degrees F
     FPC 1 PLX Switch TSen          OK         41 degrees C / 105 degrees F
     FPC 1 PLX Switch Chip          OK         43 degrees C / 109 degrees F
     FPC 3 Intake                   OK         31 degrees C / 87 degrees F
     FPC 3 Exhaust A                OK         37 degrees C / 98 degrees F
     FPC 3 Exhaust B                OK         43 degrees C / 109 degrees F
     FPC 3 LU 0 TSen                OK         42 degrees C / 107 degrees F
     FPC 3 LU 0 Chip                OK         43 degrees C / 109 degrees F
     FPC 3 LU 1 TSen                OK         42 degrees C / 107 degrees F
     FPC 3 LU 1 Chip                OK         46 degrees C / 114 degrees F
     FPC 3 LU 2 TSen                OK         42 degrees C / 107 degrees F
     FPC 3 LU 2 Chip                OK         40 degrees C / 104 degrees F
     FPC 3 LU 3 TSen                OK         42 degrees C / 107 degrees F
     FPC 3 LU 3 Chip                OK         41 degrees C / 105 degrees F
     FPC 3 MQ 0 TSen                OK         37 degrees C / 98 degrees F
     FPC 3 MQ 0 Chip                OK         37 degrees C / 98 degrees F
     FPC 3 MQ 1 TSen                OK         37 degrees C / 98 degrees F
     FPC 3 MQ 1 Chip                OK         40 degrees C / 104 degrees F
     FPC 3 MQ 2 TSen                OK         37 degrees C / 98 degrees F
     FPC 3 MQ 2 Chip                OK         36 degrees C / 96 degrees F
     FPC 3 MQ 3 TSen                OK         37 degrees C / 98 degrees F
     FPC 3 MQ 3 Chip                OK         38 degrees C / 100 degrees F
     FPC 4 Intake                   OK         34 degrees C / 93 degrees F
     FPC 4 Exhaust A                OK         45 degrees C / 113 degrees F
     FPC 4 Exhaust B                OK         47 degrees C / 116 degrees F
     FPC 4 XL TSen                  OK         44 degrees C / 111 degrees F
     FPC 4 XL Chip                  OK         47 degrees C / 116 degrees F
     FPC 4 XL_XR0 TSen              OK         44 degrees C / 111 degrees F
     FPC 4 XL_XR0 Chip              OK         48 degrees C / 118 degrees F
     FPC 4 XL_XR1 TSen              OK         44 degrees C / 111 degrees F
     FPC 4 XL_XR1 Chip              OK         47 degrees C / 116 degrees F
     FPC 4 XQ TSen                  OK         44 degrees C / 111 degrees F
     FPC 4 XQ Chip                  OK         47 degrees C / 116 degrees F
     FPC 4 XQ_XR0 TSen              OK         44 degrees C / 111 degrees F
     FPC 4 XQ_XR0 Chip              OK         57 degrees C / 134 degrees F
     FPC 4 XQ_XR1 TSen              OK         44 degrees C / 111 degrees F
     FPC 4 XQ_XR1 Chip              OK         58 degrees C / 136 degrees F
     FPC 4 XM 0 TSen                OK         51 degrees C / 123 degrees F
     FPC 4 XM 0 Chip                OK         61 degrees C / 141 degrees F
     FPC 4 XM 1 TSen                OK         51 degrees C / 123 degrees F
```

```
     FPC 4 XM 1 Chip                OK         47 degrees C / 116 degrees F
     FPC 4 PLX PCIe Switch TSe      OK         51 degrees C / 123 degrees F
     FPC 4 PLX PCIe Switch Chi      OK         60 degrees C / 140 degrees F
     FPC 5 Intake                   OK         34 degrees C / 93 degrees F
     FPC 5 Exhaust A                OK         45 degrees C / 113 degrees F
     FPC 5 Exhaust B                OK         47 degrees C / 116 degrees F
     FPC 5 XL TSen                  OK         45 degrees C / 113 degrees F
     FPC 5 XL Chip                  OK         47 degrees C / 116 degrees F
     FPC 5 XL_XR0 TSen              OK         45 degrees C / 113 degrees F
FPC 5 XL_XR0 Chip              OK         49 degrees C / 120 degrees F
     FPC 5 XL_XR1 TSen              OK         45 degrees C / 113 degrees F
     FPC 5 XL_XR1 Chip              OK         49 degrees C / 120 degrees F
     FPC 5 XQ TSen                  OK         45 degrees C / 113 degrees F
     FPC 5 XQ Chip                  OK         48 degrees C / 118 degrees F
     FPC 5 XQ_XR0 TSen              OK         45 degrees C / 113 degrees F
     FPC 5 XQ_XR0 Chip              OK         60 degrees C / 140 degrees F
     FPC 5 XQ_XR1 TSen              OK         45 degrees C / 113 degrees F
     FPC 5 XQ_XR1 Chip              OK         58 degrees C / 136 degrees F
     FPC 5 XM 0 TSen                OK         50 degrees C / 122 degrees F
     FPC 5 XM 0 Chip                OK         48 degrees C / 118 degrees F
     FPC 5 XM 1 TSen                OK         50 degrees C / 122 degrees F
     FPC 5 XM 1 Chip                OK         47 degrees C / 116 degrees F
     FPC 5 PLX PCIe Switch TSe      OK         50 degrees C / 122 degrees F
     FPC 5 PLX PCIe Switch Chi      OK         59 degrees C / 138 degrees F
     FPC 7 Intake                   OK         32 degrees C / 89 degrees F
     FPC 7 Exhaust A                OK         32 degrees C / 89 degrees F
     FPC 7 Exhaust B                OK         33 degrees C / 91 degrees F
     FPC 7 LU 0 TSen                OK         49 degrees C / 120 degrees F
     FPC 7 LU 0 Chip                OK         44 degrees C / 111 degrees F
     FPC 7 LU 1 TSen                OK         49 degrees C / 120 degrees F
     FPC 7 LU 1 Chip                OK         47 degrees C / 116 degrees F
     FPC 7 LU 2 TSen                OK         49 degrees C / 120 degrees F
     FPC 7 LU 2 Chip                OK         39 degrees C / 102 degrees F
     FPC 7 LU 3 TSen                OK         49 degrees C / 120 degrees F
     FPC 7 LU 3 Chip                OK         43 degrees C / 109 degrees F
     FPC 7 XM 0 TSen                OK         49 degrees C / 120 degrees F
     FPC 7 XM 0 Chip                OK         57 degrees C / 134 degrees F
     FPC 7 XM 1 TSen                OK         49 degrees C / 120 degrees F
     FPC 7 XM 1 Chip                OK         48 degrees C / 118 degrees F
     FPC 7 PLX Switch TSen          OK         49 degrees C / 120 degrees F
     FPC 7 PLX Switch Chip          OK         45 degrees C / 113 degrees F
     FPC 8 Intake                   OK         36 degrees C / 96 degrees F
     FPC 8 Exhaust A                OK         51 degrees C / 123 degrees F
     FPC 8 Exhaust B                OK         46 degrees C / 114 degrees F
     FPC 8 XL TSen                  OK         46 degrees C / 114 degrees F
     FPC 8 XL Chip                  OK         47 degrees C / 116 degrees F
     FPC 8 XL_XR0 TSen              OK         46 degrees C / 114 degrees F
     FPC 8 XL_XR0 Chip              OK         53 degrees C / 127 degrees F
     FPC 8 XL_XR1 TSen              OK         46 degrees C / 114 degrees F
     FPC 8 XL_XR1 Chip              OK         52 degrees C / 125 degrees F
     FPC 8 XQ TSen                  OK         46 degrees C / 114 degrees F
     FPC 8 XQ Chip                  OK         46 degrees C / 114 degrees F
     FPC 8 XQ_XR0 TSen              OK         46 degrees C / 114 degrees F
     FPC 8 XQ_XR0 Chip              OK         59 degrees C / 138 degrees F
     FPC 8 XQ_XR1 TSen              OK         46 degrees C / 114 degrees F
     FPC 8 XQ_XR1 Chip              OK         57 degrees C / 134 degrees F
     FPC 8 XM 0 TSen                OK         52 degrees C / 125 degrees F
     FPC 8 XM 0 Chip                OK         61 degrees C / 141 degrees F
     FPC 8 XM 1 TSen                OK         52 degrees C / 125 degrees F
     FPC 8 XM 1 Chip                OK         47 degrees C / 116 degrees F
     FPC 8 PLX PCIe Switch TSe      OK         52 degrees C / 125 degrees F
```

```
      FPC 8 PLX PCIe Switch Chi      OK         63 degrees C / 145 degrees F
      FPC 9 Intake                   OK         31 degrees C / 87 degrees F
      FPC 9 Exhaust A                OK         34 degrees C / 93 degrees F
      FPC 9 Exhaust B                OK         35 degrees C / 95 degrees F
 FPC 9 QX 0 TSen                OK         42 degrees C / 107 degrees F
      FPC 9 QX 0 Chip                OK         45 degrees C / 113 degrees F
      FPC 9 LU 0 TCAM TSen           OK         42 degrees C / 107 degrees F
      FPC 9 LU 0 TCAM Chip           OK         41 degrees C / 105 degrees F
      FPC 9 LU 0 TSen                OK         42 degrees C / 107 degrees F
      FPC 9 LU 0 Chip                OK         43 degrees C / 109 degrees F
      FPC 9 MQ 0 TSen                OK         42 degrees C / 107 degrees F
      FPC 9 MQ 0 Chip                OK         43 degrees C / 109 degrees F
      FPC 9 QX 1 TSen                OK         38 degrees C / 100 degrees F
      FPC 9 QX 1 Chip                OK         40 degrees C / 104 degrees F
      FPC 9 LU 1 TCAM TSen           OK         38 degrees C / 100 degrees F
      FPC 9 LU 1 TCAM Chip           OK         38 degrees C / 100 degrees F
      FPC 9 LU 1 TSen                OK         38 degrees C / 100 degrees F
      FPC 9 LU 1 Chip                OK         41 degrees C / 105 degrees F
      FPC 9 MQ 1 TSen                OK         38 degrees C / 100 degrees F
      FPC 9 MQ 1 Chip                OK         41 degrees C / 105 degrees F
      FPC 10 Intake                  OK         35 degrees C / 95 degrees F
      FPC 10 Exhaust A               OK         51 degrees C / 123 degrees F
      FPC 10 Exhaust B               OK         46 degrees C / 114 degrees F
      FPC 10 XL TSen                 OK         42 degrees C / 107 degrees F
      FPC 10 XL Chip                 OK         44 degrees C / 111 degrees F
      FPC 10 XL_XR0 TSen             OK         42 degrees C / 107 degrees F
      FPC 10 XL_XR0 Chip             OK         47 degrees C / 116 degrees F
      FPC 10 XL_XR1 TSen             OK         42 degrees C / 107 degrees F
      FPC 10 XL_XR1 Chip             OK         48 degrees C / 118 degrees F
      FPC 10 XQ TSen                 OK         42 degrees C / 107 degrees F
      FPC 10 XQ Chip                 OK         46 degrees C / 114 degrees F
      FPC 10 XQ_XR0 TSen             OK         42 degrees C / 107 degrees F
      FPC 10 XQ_XR0 Chip             OK         57 degrees C / 134 degrees F
      FPC 10 XQ_XR1 TSen             OK         42 degrees C / 107 degrees F
      FPC 10 XQ_XR1 Chip             OK         53 degrees C / 127 degrees F
      FPC 10 XM 0 TSen               OK         51 degrees C / 123 degrees F
      FPC 10 XM 0 Chip               OK         61 degrees C / 141 degrees F
      FPC 10 XM 1 TSen               OK         51 degrees C / 123 degrees F
      FPC 10 XM 1 Chip               OK         49 degrees C / 120 degrees F
      FPC 10 PLX PCIe Switch TSe     OK         51 degrees C / 123 degrees F
      FPC 10 PLX PCIe Switch Chi     OK         61 degrees C / 141 degrees F
      FPC 11 Intake                  OK         33 degrees C / 91 degrees F
      FPC 11 Exhaust A               OK         33 degrees C / 91 degrees F
      FPC 11 Exhaust B               OK         34 degrees C / 93 degrees F
      FPC 11 LU 0 TSen               OK         50 degrees C / 122 degrees F
      FPC 11 LU 0 Chip               OK         48 degrees C / 118 degrees F
      FPC 11 LU 1 TSen               OK         50 degrees C / 122 degrees F
      FPC 11 LU 1 Chip               OK         50 degrees C / 122 degrees F
      FPC 11 LU 2 TSen               OK         50 degrees C / 122 degrees F
      FPC 11 LU 2 Chip               OK         41 degrees C / 105 degrees F
      FPC 11 LU 3 TSen               OK         50 degrees C / 122 degrees F
      FPC 11 LU 3 Chip               OK         48 degrees C / 118 degrees F
      FPC 11 XM 0 TSen               OK         50 degrees C / 122 degrees F
      FPC 11 XM 0 Chip               OK         57 degrees C / 134 degrees F
      FPC 11 XM 1 TSen               OK         50 degrees C / 122 degrees F
      FPC 11 XM 1 Chip               OK         52 degrees C / 125 degrees F
      FPC 11 PLX Switch TSen         OK         50 degrees C / 122 degrees F
      FPC 11 PLX Switch Chip         OK         45 degrees C / 113 degrees F
Fans  Top Fan Tray Temp              OK         42 degrees C / 107 degrees F
      Top Tray Fan 1                 OK         Spinning at high speed
 Top Tray Fan 2                 OK         Spinning at high speed
```

```
      Top Tray Fan 3                OK         Spinning at high speed
      Top Tray Fan 4                OK         Spinning at high speed
      Top Tray Fan 5                OK         Spinning at high speed
      Top Tray Fan 6                OK         Spinning at high speed
      Top Tray Fan 7                OK         Spinning at high speed
      Top Tray Fan 8                OK         Spinning at high speed
      Top Tray Fan 9                OK         Spinning at high speed
      Top Tray Fan 10               OK         Spinning at high speed
      Top Tray Fan 11               OK         Spinning at high speed
      Top Tray Fan 12               OK         Spinning at high speed
      Bottom Fan Tray Temp          OK         33 degrees C / 91 degrees F
      Bottom Tray Fan 1             OK         Spinning at high speed
      Bottom Tray Fan 2             OK         Spinning at high speed
      Bottom Tray Fan 3             OK         Spinning at high speed
      Bottom Tray Fan 4             OK         Spinning at high speed
      Bottom Tray Fan 5             OK         Spinning at high speed
      Bottom Tray Fan 6             OK         Spinning at high speed
      Bottom Tray Fan 7             OK         Spinning at high speed
      Bottom Tray Fan 8             OK         Spinning at high speed
      Bottom Tray Fan 9             OK         Spinning at high speed
      Bottom Tray Fan 10            OK         Spinning at high speed
      Bottom Tray Fan 11            OK         Spinning at high speed
      Bottom Tray Fan 12            OK         Spinning at high speed
```

show chassis environment (MX2020 Router)

```
user@host> show chassis environment
Class Item                          Status     Measurement
Temp  PSM 0                         Absent
      PSM 1                         Absent
      PSM 2                         OK         41 degrees C / 105 degrees F
      PSM 3                         OK         39 degrees C / 102 degrees F
      PSM 4                         OK         39 degrees C / 102 degrees F
      PSM 5                         OK         38 degrees C / 100 degrees F
      PSM 6                         OK         38 degrees C / 100 degrees F
      PSM 7                         OK         38 degrees C / 100 degrees F
      PSM 8                         OK         37 degrees C / 98 degrees F
      PSM 9                         Absent
      PSM 10                        Absent
      PSM 11                        OK         47 degrees C / 116 degrees F
      PSM 12                        OK         45 degrees C / 113 degrees F
      PSM 13                        OK         44 degrees C / 111 degrees F
      PSM 14                        OK         44 degrees C / 111 degrees F
      PSM 15                        OK         43 degrees C / 109 degrees F
      PSM 16                        OK         42 degrees C / 107 degrees F
      PSM 17                        OK         41 degrees C / 105 degrees F
      PDM 0                         OK
      PDM 1                         Absent
      PDM 2                         Absent
      PDM 3                         OK
      CB 0 IntakeA-Zone0            OK         45 degrees C / 113 degrees F
      CB 0 IntakeB-Zone1            OK         34 degrees C / 93 degrees F
      CB 0 IntakeC-Zone0            OK         48 degrees C / 118 degrees F
      CB 0 ExhaustA-Zone0           OK         45 degrees C / 113 degrees F
      CB 0 ExhaustB-Zone1           OK         37 degrees C / 98 degrees F
      CB 0 TCBC-Zone0               OK         41 degrees C / 105 degrees F
      CB 1 IntakeA-Zone0            OK         46 degrees C / 114 degrees F
      CB 1 IntakeB-Zone1            OK         42 degrees C / 107 degrees F
      CB 1 IntakeC-Zone0            OK         49 degrees C / 120 degrees F
      CB 1 ExhaustA-Zone0           OK         46 degrees C / 114 degrees F
      CB 1 ExhaustB-Zone1           OK         41 degrees C / 105 degrees F
```

```
CB 1 TCBC-Zone0                OK         46 degrees C / 114 degrees F
SPMB 0 Intake                  OK         33 degrees C / 91 degrees F
SPMB 1 Intake                  OK         42 degrees C / 107 degrees F
Routing Engine 0               OK         35 degrees C / 95 degrees F
Routing Engine 0 CPU           OK         34 degrees C / 93 degrees F
Routing Engine 1               OK         44 degrees C / 111 degrees F
Routing Engine 1 CPU           OK         42 degrees C / 107 degrees F
SFB 0 Intake-Zone0             OK         55 degrees C / 131 degrees F
SFB 0 Exhaust-Zone1            OK         48 degrees C / 118 degrees F
SFB 0 IntakeA-Zone0            OK         50 degrees C / 122 degrees F
SFB 0 IntakeB-Zone1            OK         40 degrees C / 104 degrees F
SFB 0 Exhaust-Zone0            OK         52 degrees C / 125 degrees F
SFB 0 SFB-XF2-Zone1            OK         61 degrees C / 141 degrees F
SFB 0 SFB-XF1-Zone0            OK         69 degrees C / 156 degrees F
SFB 0 SFB-XF0-Zone0            OK         68 degrees C / 154 degrees F
SFB 1 Intake-Zone0             OK         56 degrees C / 132 degrees F
SFB 1 Exhaust-Zone1            OK         47 degrees C / 116 degrees F
SFB 1 IntakeA-Zone0            OK         51 degrees C / 123 degrees F
SFB 1 IntakeB-Zone1            OK         40 degrees C / 104 degrees F
SFB 1 Exhaust-Zone0            OK         51 degrees C / 123 degrees F
SFB 1 SFB-XF2-Zone1            OK         62 degrees C / 143 degrees F
SFB 1 SFB-XF1-Zone0            OK         67 degrees C / 152 degrees F
SFB 1 SFB-XF0-Zone0            OK         69 degrees C / 156 degrees F
SFB 2 Intake-Zone0             OK         56 degrees C / 132 degrees F
SFB 2 Exhaust-Zone1            OK         47 degrees C / 116 degrees F
SFB 2 IntakeA-Zone0            OK         51 degrees C / 123 degrees F
SFB 2 IntakeB-Zone1            OK         40 degrees C / 104 degrees F
SFB 2 Exhaust-Zone0            OK         53 degrees C / 127 degrees F
SFB 2 SFB-XF2-Zone1            OK         65 degrees C / 149 degrees F
SFB 2 SFB-XF1-Zone0            OK         69 degrees C / 156 degrees F
SFB 2 SFB-XF0-Zone0            OK         70 degrees C / 158 degrees F
SFB 3 Intake-Zone0             OK         57 degrees C / 134 degrees F
SFB 3 Exhaust-Zone1            OK         48 degrees C / 118 degrees F
SFB 3 IntakeA-Zone0            OK         52 degrees C / 125 degrees F
SFB 3 IntakeB-Zone1            OK         41 degrees C / 105 degrees F
SFB 3 Exhaust-Zone0            OK         53 degrees C / 127 degrees F
SFB 3 SFB-XF2-Zone1            OK         66 degrees C / 150 degrees F
SFB 3 SFB-XF1-Zone0            OK         69 degrees C / 156 degrees F
SFB 3 SFB-XF0-Zone0            OK         71 degrees C / 159 degrees F
SFB 4 Intake-Zone0             OK         58 degrees C / 136 degrees F
SFB 4 Exhaust-Zone1            OK         49 degrees C / 120 degrees F
SFB 4 IntakeA-Zone0            OK         54 degrees C / 129 degrees F
SFB 4 IntakeB-Zone1            OK         42 degrees C / 107 degrees F
SFB 4 Exhaust-Zone0            OK         53 degrees C / 127 degrees F
SFB 4 SFB-XF2-Zone1            OK         64 degrees C / 147 degrees F
SFB 4 SFB-XF1-Zone0            OK         68 degrees C / 154 degrees F
SFB 4 SFB-XF0-Zone0            OK         71 degrees C / 159 degrees F
SFB 5 Intake-Zone0             OK         58 degrees C / 136 degrees F
SFB 5 Exhaust-Zone1            OK         50 degrees C / 122 degrees F
SFB 5 IntakeA-Zone0            OK         53 degrees C / 127 degrees F
SFB 5 IntakeB-Zone1            OK         43 degrees C / 109 degrees F
SFB 5 Exhaust-Zone0            OK         54 degrees C / 129 degrees F
SFB 5 SFB-XF2-Zone1            OK         66 degrees C / 150 degrees F
SFB 5 SFB-XF1-Zone0            OK         69 degrees C / 156 degrees F
SFB 5 SFB-XF0-Zone0            OK         74 degrees C / 165 degrees F
SFB 6 Intake-Zone0             OK         58 degrees C / 136 degrees F
SFB 6 Exhaust-Zone1            OK         49 degrees C / 120 degrees F
SFB 6 IntakeA-Zone0            OK         53 degrees C / 127 degrees F
SFB 6 IntakeB-Zone1            OK         43 degrees C / 109 degrees F
SFB 6 Exhaust-Zone0            OK         53 degrees C / 127 degrees F
SFB 6 SFB-XF2-Zone1            OK         65 degrees C / 149 degrees F
```

```
SFB 6 SFB-XF1-Zone0            OK         68 degrees C / 154 degrees F
SFB 6 SFB-XF0-Zone0            OK         72 degrees C / 161 degrees F
SFB 7 Intake-Zone0             OK         57 degrees C / 134 degrees F
SFB 7 Exhaust-Zone1            OK         50 degrees C / 122 degrees F
SFB 7 IntakeA-Zone0            OK         53 degrees C / 127 degrees F
SFB 7 IntakeB-Zone1            OK         43 degrees C / 109 degrees F
SFB 7 Exhaust-Zone0            OK         54 degrees C / 129 degrees F
SFB 7 SFB-XF2-Zone1            OK         68 degrees C / 154 degrees F
SFB 7 SFB-XF1-Zone0            OK         69 degrees C / 156 degrees F
SFB 7 SFB-XF0-Zone0            OK         73 degrees C / 163 degrees F
FPC 0 Intake                   OK         41 degrees C / 105 degrees F
FPC 0 Exhaust A                OK         48 degrees C / 118 degrees F
FPC 0 Exhaust B                OK         62 degrees C / 143 degrees F
FPC 0 LU 0 TSen                OK         59 degrees C / 138 degrees F
FPC 0 LU 0 Chip                OK         62 degrees C / 143 degrees F
FPC 0 LU 1 TSen                OK         59 degrees C / 138 degrees F
FPC 0 LU 1 Chip                OK         64 degrees C / 147 degrees F
FPC 0 LU 2 TSen                OK         59 degrees C / 138 degrees F
FPC 0 LU 2 Chip                OK         53 degrees C / 127 degrees F
FPC 0 LU 3 TSen                OK         59 degrees C / 138 degrees F
FPC 0 LU 3 Chip                OK         53 degrees C / 127 degrees F
FPC 0 MQ 0 TSen                OK         47 degrees C / 116 degrees F
FPC 0 MQ 0 Chip                OK         49 degrees C / 120 degrees F
FPC 0 MQ 1 TSen                OK         47 degrees C / 116 degrees F
FPC 0 MQ 1 Chip                OK         51 degrees C / 123 degrees F
FPC 0 MQ 2 TSen                OK         47 degrees C / 116 degrees F
FPC 0 MQ 2 Chip                OK         44 degrees C / 111 degrees F
FPC 0 MQ 3 TSen                OK         47 degrees C / 116 degrees F
FPC 0 MQ 3 Chip                OK         45 degrees C / 113 degrees F
FPC 1 Intake                   OK         40 degrees C / 104 degrees F
FPC 1 Exhaust A                OK         49 degrees C / 120 degrees F
FPC 1 Exhaust B                OK         58 degrees C / 136 degrees F
FPC 1 LU 0 TSen                OK         55 degrees C / 131 degrees F
FPC 1 LU 0 Chip                OK         56 degrees C / 132 degrees F
FPC 1 LU 1 TSen                OK         55 degrees C / 131 degrees F
FPC 1 LU 1 Chip                OK         58 degrees C / 136 degrees F
FPC 1 LU 2 TSen                OK         55 degrees C / 131 degrees F
FPC 1 LU 2 Chip                OK         49 degrees C / 120 degrees F
FPC 1 LU 3 TSen                OK         55 degrees C / 131 degrees F
FPC 1 LU 3 Chip                OK         51 degrees C / 123 degrees F
FPC 1 MQ 0 TSen                OK         47 degrees C / 116 degrees F
FPC 1 MQ 0 Chip                OK         48 degrees C / 118 degrees F
FPC 1 MQ 1 TSen                OK         47 degrees C / 116 degrees F
FPC 1 MQ 1 Chip                OK         50 degrees C / 122 degrees F
FPC 1 MQ 2 TSen                OK         47 degrees C / 116 degrees F
FPC 1 MQ 2 Chip                OK         44 degrees C / 111 degrees F
FPC 1 MQ 3 TSen                OK         47 degrees C / 116 degrees F
FPC 1 MQ 3 Chip                OK         44 degrees C / 111 degrees F
FPC 2 Intake                   OK         39 degrees C / 102 degrees F
FPC 2 Exhaust A                OK         49 degrees C / 120 degrees F
FPC 2 Exhaust B                OK         61 degrees C / 141 degrees F
FPC 2 LU 0 TSen                OK         58 degrees C / 136 degrees F
FPC 2 LU 0 Chip                OK         60 degrees C / 140 degrees F
FPC 2 LU 1 TSen                OK         58 degrees C / 136 degrees F
FPC 2 LU 1 Chip                OK         65 degrees C / 149 degrees F
FPC 2 LU 2 TSen                OK         58 degrees C / 136 degrees F
FPC 2 LU 2 Chip                OK         51 degrees C / 123 degrees F
FPC 2 LU 3 TSen                OK         58 degrees C / 136 degrees F
FPC 2 LU 3 Chip                OK         53 degrees C / 127 degrees F
FPC 2 MQ 0 TSen                OK         47 degrees C / 116 degrees F
FPC 2 MQ 0 Chip                OK         50 degrees C / 122 degrees F
```

```
FPC 2 MQ 1 TSen                OK         47 degrees C / 116 degrees F
FPC 2 MQ 1 Chip                OK         52 degrees C / 125 degrees F
FPC 2 MQ 2 TSen                OK         47 degrees C / 116 degrees F
FPC 2 MQ 2 Chip                OK         45 degrees C / 113 degrees F
FPC 2 MQ 3 TSen                OK         47 degrees C / 116 degrees F
FPC 2 MQ 3 Chip                OK         46 degrees C / 114 degrees F
FPC 3 Intake                   OK         40 degrees C / 104 degrees F
FPC 3 Exhaust A                OK         49 degrees C / 120 degrees F
FPC 3 Exhaust B                OK         61 degrees C / 141 degrees F
FPC 3 LU 0 TSen                OK         58 degrees C / 136 degrees F
FPC 3 LU 0 Chip                OK         61 degrees C / 141 degrees F
FPC 3 LU 1 TSen                OK         58 degrees C / 136 degrees F
FPC 3 LU 1 Chip                OK         62 degrees C / 143 degrees F
FPC 3 LU 2 TSen                OK         58 degrees C / 136 degrees F
FPC 3 LU 2 Chip                OK         51 degrees C / 123 degrees F
FPC 3 LU 3 TSen                OK         58 degrees C / 136 degrees F
FPC 3 LU 3 Chip                OK         53 degrees C / 127 degrees F
FPC 3 MQ 0 TSen                OK         48 degrees C / 118 degrees F
FPC 3 MQ 0 Chip                OK         50 degrees C / 122 degrees F
FPC 3 MQ 1 TSen                OK         48 degrees C / 118 degrees F
FPC 3 MQ 1 Chip                OK         54 degrees C / 129 degrees F
FPC 3 MQ 2 TSen                OK         48 degrees C / 118 degrees F
FPC 3 MQ 2 Chip                OK         45 degrees C / 113 degrees F
FPC 3 MQ 3 TSen                OK         48 degrees C / 118 degrees F
FPC 3 MQ 3 Chip                OK         48 degrees C / 118 degrees F
FPC 4 Intake                   OK         40 degrees C / 104 degrees F
FPC 4 Exhaust A                OK         49 degrees C / 120 degrees F
FPC 4 Exhaust B                OK         62 degrees C / 143 degrees F
FPC 4 LU 0 TSen                OK         59 degrees C / 138 degrees F
FPC 4 LU 0 Chip                OK         62 degrees C / 143 degrees F
FPC 4 LU 1 TSen                OK         59 degrees C / 138 degrees F
FPC 4 LU 1 Chip                OK         65 degrees C / 149 degrees F
FPC 4 LU 2 TSen                OK         59 degrees C / 138 degrees F
FPC 4 LU 2 Chip                OK         51 degrees C / 123 degrees F
FPC 4 LU 3 TSen                OK         59 degrees C / 138 degrees F
FPC 4 LU 3 Chip                OK         53 degrees C / 127 degrees F
FPC 4 MQ 0 TSen                OK         48 degrees C / 118 degrees F
FPC 4 MQ 0 Chip                OK         52 degrees C / 125 degrees F
FPC 4 MQ 1 TSen                OK         48 degrees C / 118 degrees F
FPC 4 MQ 1 Chip                OK         53 degrees C / 127 degrees F
FPC 4 MQ 2 TSen                OK         48 degrees C / 118 degrees F
FPC 4 MQ 2 Chip                OK         46 degrees C / 114 degrees F
FPC 4 MQ 3 TSen                OK         48 degrees C / 118 degrees F
FPC 4 MQ 3 Chip                OK         47 degrees C / 116 degrees F
FPC 5 Intake                   OK         41 degrees C / 105 degrees F
FPC 5 Exhaust A                OK         50 degrees C / 122 degrees F
FPC 5 Exhaust B                OK         63 degrees C / 145 degrees F
FPC 5 LU 0 TSen                OK         60 degrees C / 140 degrees F
FPC 5 LU 0 Chip                OK         63 degrees C / 145 degrees F
FPC 5 LU 1 TSen                OK         60 degrees C / 140 degrees F
FPC 5 LU 1 Chip                OK         66 degrees C / 150 degrees F
FPC 5 LU 2 TSen                OK         60 degrees C / 140 degrees F
FPC 5 LU 2 Chip                OK         56 degrees C / 132 degrees F
FPC 5 LU 3 TSen                OK         60 degrees C / 140 degrees F
FPC 5 LU 3 Chip                OK         54 degrees C / 129 degrees F
FPC 5 MQ 0 TSen                OK         49 degrees C / 120 degrees F
FPC 5 MQ 0 Chip                OK         52 degrees C / 125 degrees F
FPC 5 MQ 1 TSen                OK         49 degrees C / 120 degrees F
FPC 5 MQ 1 Chip                OK         53 degrees C / 127 degrees F
FPC 5 MQ 2 TSen                OK         49 degrees C / 120 degrees F
FPC 5 MQ 2 Chip                OK         48 degrees C / 118 degrees F
```

```
FPC 5 MQ 3 TSen                OK         49 degrees C / 120 degrees F
FPC 5 MQ 3 Chip                OK         47 degrees C / 116 degrees F
FPC 6 Intake                   OK         42 degrees C / 107 degrees F
FPC 6 Exhaust A                OK         51 degrees C / 123 degrees F
FPC 6 Exhaust B                OK         63 degrees C / 145 degrees F
FPC 6 LU 0 TSen                OK         61 degrees C / 141 degrees F
FPC 6 LU 0 Chip                OK         64 degrees C / 147 degrees F
FPC 6 LU 1 TSen                OK         61 degrees C / 141 degrees F
FPC 6 LU 1 Chip                OK         66 degrees C / 150 degrees F
FPC 6 LU 2 TSen                OK         61 degrees C / 141 degrees F
FPC 6 LU 2 Chip                OK         56 degrees C / 132 degrees F
FPC 6 LU 3 TSen                OK         61 degrees C / 141 degrees F
FPC 6 LU 3 Chip                OK         56 degrees C / 132 degrees F
FPC 6 MQ 0 TSen                OK         50 degrees C / 122 degrees F
FPC 6 MQ 0 Chip                OK         56 degrees C / 132 degrees F
FPC 6 MQ 1 TSen                OK         50 degrees C / 122 degrees F
FPC 6 MQ 1 Chip                OK         59 degrees C / 138 degrees F
FPC 6 MQ 2 TSen                OK         50 degrees C / 122 degrees F
FPC 6 MQ 2 Chip                OK         49 degrees C / 120 degrees F
FPC 6 MQ 3 TSen                OK         50 degrees C / 122 degrees F
FPC 6 MQ 3 Chip                OK         49 degrees C / 120 degrees F
FPC 7 Intake                   OK         41 degrees C / 105 degrees F
FPC 7 Exhaust A                OK         51 degrees C / 123 degrees F
FPC 7 Exhaust B                OK         63 degrees C / 145 degrees F
FPC 7 LU 0 TSen                OK         60 degrees C / 140 degrees F
FPC 7 LU 0 Chip                OK         61 degrees C / 141 degrees F
FPC 7 LU 1 TSen                OK         60 degrees C / 140 degrees F
FPC 7 LU 1 Chip                OK         65 degrees C / 149 degrees F
FPC 7 LU 2 TSen                OK         60 degrees C / 140 degrees F
FPC 7 LU 2 Chip                OK         54 degrees C / 129 degrees F
FPC 7 LU 3 TSen                OK         60 degrees C / 140 degrees F
FPC 7 LU 3 Chip                OK         53 degrees C / 127 degrees F
FPC 7 MQ 0 TSen                OK         50 degrees C / 122 degrees F
FPC 7 MQ 0 Chip                OK         53 degrees C / 127 degrees F
FPC 7 MQ 1 TSen                OK         50 degrees C / 122 degrees F
FPC 7 MQ 1 Chip                OK         54 degrees C / 129 degrees F
FPC 7 MQ 2 TSen                OK         50 degrees C / 122 degrees F
FPC 7 MQ 2 Chip                OK         47 degrees C / 116 degrees F
FPC 7 MQ 3 TSen                OK         50 degrees C / 122 degrees F
FPC 7 MQ 3 Chip                OK         47 degrees C / 116 degrees F
FPC 8 Intake                   OK         41 degrees C / 105 degrees F
FPC 8 Exhaust A                OK         50 degrees C / 122 degrees F
FPC 8 Exhaust B                OK         62 degrees C / 143 degrees F
FPC 8 LU 0 TSen                OK         59 degrees C / 138 degrees F
FPC 8 LU 0 Chip                OK         62 degrees C / 143 degrees F
FPC 8 LU 1 TSen                OK         59 degrees C / 138 degrees F
FPC 8 LU 1 Chip                OK         64 degrees C / 147 degrees F
FPC 8 LU 2 TSen                OK         59 degrees C / 138 degrees F
FPC 8 LU 2 Chip                OK         55 degrees C / 131 degrees F
FPC 8 LU 3 TSen                OK         59 degrees C / 138 degrees F
FPC 8 LU 3 Chip                OK         54 degrees C / 129 degrees F
FPC 8 MQ 0 TSen                OK         49 degrees C / 120 degrees F
FPC 8 MQ 0 Chip                OK         51 degrees C / 123 degrees F
FPC 8 MQ 1 TSen                OK         49 degrees C / 120 degrees F
FPC 8 MQ 1 Chip                OK         52 degrees C / 125 degrees F
FPC 8 MQ 2 TSen                OK         49 degrees C / 120 degrees F
FPC 8 MQ 2 Chip                OK         46 degrees C / 114 degrees F
FPC 8 MQ 3 TSen                OK         49 degrees C / 120 degrees F
FPC 8 MQ 3 Chip                OK         47 degrees C / 116 degrees F
FPC 9 Intake                   OK         42 degrees C / 107 degrees F
FPC 9 Exhaust A                OK         51 degrees C / 123 degrees F
```

```
FPC 9 Exhaust B                OK         63 degrees C / 145 degrees F
FPC 9 LU 0 TSen                OK         60 degrees C / 140 degrees F
FPC 9 LU 0 Chip                OK         65 degrees C / 149 degrees F
FPC 9 LU 1 TSen                OK         60 degrees C / 140 degrees F
FPC 9 LU 1 Chip                OK         67 degrees C / 152 degrees F
FPC 9 LU 2 TSen                OK         60 degrees C / 140 degrees F
FPC 9 LU 2 Chip                OK         54 degrees C / 129 degrees F
FPC 9 LU 3 TSen                OK         60 degrees C / 140 degrees F
FPC 9 LU 3 Chip                OK         54 degrees C / 129 degrees F
FPC 9 MQ 0 TSen                OK         51 degrees C / 123 degrees F
FPC 9 MQ 0 Chip                OK         55 degrees C / 131 degrees F
FPC 9 MQ 1 TSen                OK         51 degrees C / 123 degrees F
FPC 9 MQ 1 Chip                OK         59 degrees C / 138 degrees F
FPC 9 MQ 2 TSen                OK         51 degrees C / 123 degrees F
FPC 9 MQ 2 Chip                OK         49 degrees C / 120 degrees F
FPC 9 MQ 3 TSen                OK         51 degrees C / 123 degrees F
FPC 9 MQ 3 Chip                OK         49 degrees C / 120 degrees F
FPC 10 Intake                  OK         44 degrees C / 111 degrees F
FPC 10 Exhaust A               OK         49 degrees C / 120 degrees F
FPC 10 Exhaust B               OK         55 degrees C / 131 degrees F
FPC 10 LU 0 TSen               OK         54 degrees C / 129 degrees F
FPC 10 LU 0 Chip               OK         55 degrees C / 131 degrees F
FPC 10 LU 1 TSen               OK         54 degrees C / 129 degrees F
FPC 10 LU 1 Chip               OK         59 degrees C / 138 degrees F
FPC 10 LU 2 TSen               OK         54 degrees C / 129 degrees F
FPC 10 LU 2 Chip               OK         52 degrees C / 125 degrees F
FPC 10 LU 3 TSen               OK         54 degrees C / 129 degrees F
FPC 10 LU 3 Chip               OK         51 degrees C / 123 degrees F
FPC 10 MQ 0 TSen               OK         48 degrees C / 118 degrees F
FPC 10 MQ 0 Chip               OK         49 degrees C / 120 degrees F
FPC 10 MQ 1 TSen               OK         48 degrees C / 118 degrees F
FPC 10 MQ 1 Chip               OK         52 degrees C / 125 degrees F
FPC 10 MQ 2 TSen               OK         48 degrees C / 118 degrees F
FPC 10 MQ 2 Chip               OK         47 degrees C / 116 degrees F
FPC 10 MQ 3 TSen               OK         48 degrees C / 118 degrees F
FPC 10 MQ 3 Chip               OK         47 degrees C / 116 degrees F
FPC 11 Intake                  OK         30 degrees C / 86 degrees F
FPC 11 Exhaust A               OK         35 degrees C / 95 degrees F
FPC 11 Exhaust B               OK         30 degrees C / 86 degrees F
FPC 11 LU 0 TSen               OK         57 degrees C / 134 degrees F
FPC 11 LU 0 Chip               OK         58 degrees C / 136 degrees F
FPC 11 LU 1 TSen               OK         57 degrees C / 134 degrees F
FPC 11 LU 1 Chip               OK         62 degrees C / 143 degrees F
FPC 11 LU 2 TSen               OK         57 degrees C / 134 degrees F
FPC 11 LU 2 Chip               OK         53 degrees C / 127 degrees F
FPC 11 LU 3 TSen               OK         57 degrees C / 134 degrees F
FPC 11 LU 3 Chip               OK         54 degrees C / 129 degrees F
FPC 11 MQ 0 TSen               OK         52 degrees C / 125 degrees F
FPC 11 MQ 0 Chip               OK         52 degrees C / 125 degrees F
FPC 11 MQ 1 TSen               OK         52 degrees C / 125 degrees F
FPC 11 MQ 1 Chip               OK         57 degrees C / 134 degrees F
FPC 11 MQ 2 TSen               OK         52 degrees C / 125 degrees F
FPC 11 MQ 2 Chip               OK         48 degrees C / 118 degrees F
FPC 11 MQ 3 TSen               OK         52 degrees C / 125 degrees F
FPC 11 MQ 3 Chip               OK         52 degrees C / 125 degrees F
FPC 12 Intake                  OK         40 degrees C / 104 degrees F
FPC 12 Exhaust A               OK         47 degrees C / 116 degrees F
FPC 12 Exhaust B               OK         52 degrees C / 125 degrees F
FPC 12 LU 0 TSen               OK         51 degrees C / 123 degrees F
FPC 12 LU 0 Chip               OK         52 degrees C / 125 degrees F
FPC 12 LU 1 TSen               OK         51 degrees C / 123 degrees F
```

```
FPC 12 LU 1 Chip                OK          55 degrees C / 131 degrees F
FPC 12 LU 2 TSen                OK          51 degrees C / 123 degrees F
FPC 12 LU 2 Chip                OK          47 degrees C / 116 degrees F
FPC 12 LU 3 TSen                OK          51 degrees C / 123 degrees F
FPC 12 LU 3 Chip                OK          50 degrees C / 122 degrees F
FPC 12 MQ 0 TSen                OK          46 degrees C / 114 degrees F
FPC 12 MQ 0 Chip                OK          46 degrees C / 114 degrees F
FPC 12 MQ 1 TSen                OK          46 degrees C / 114 degrees F
FPC 12 MQ 1 Chip                OK          50 degrees C / 122 degrees F
FPC 12 MQ 2 TSen                OK          46 degrees C / 114 degrees F
FPC 12 MQ 2 Chip                OK          44 degrees C / 111 degrees F
FPC 12 MQ 3 TSen                OK          46 degrees C / 114 degrees F
FPC 12 MQ 3 Chip                OK          46 degrees C / 114 degrees F
FPC 13 Intake                   OK          40 degrees C / 104 degrees F
FPC 13 Exhaust A                OK          48 degrees C / 118 degrees F
FPC 13 Exhaust B                OK          52 degrees C / 125 degrees F
FPC 13 LU 0 TSen                OK          51 degrees C / 123 degrees F
FPC 13 LU 0 Chip                OK          52 degrees C / 125 degrees F
FPC 13 LU 1 TSen                OK          51 degrees C / 123 degrees F
FPC 13 LU 1 Chip                OK          55 degrees C / 131 degrees F
FPC 13 LU 2 TSen                OK          51 degrees C / 123 degrees F
FPC 13 LU 2 Chip                OK          48 degrees C / 118 degrees F
FPC 13 LU 3 TSen                OK          51 degrees C / 123 degrees F
FPC 13 LU 3 Chip                OK          48 degrees C / 118 degrees F
FPC 13 MQ 0 TSen                OK          46 degrees C / 114 degrees F
FPC 13 MQ 0 Chip                OK          46 degrees C / 114 degrees F
FPC 13 MQ 1 TSen                OK          46 degrees C / 114 degrees F
FPC 13 MQ 1 Chip                OK          50 degrees C / 122 degrees F
FPC 13 MQ 2 TSen                OK          46 degrees C / 114 degrees F
FPC 13 MQ 2 Chip                OK          44 degrees C / 111 degrees F
FPC 13 MQ 3 TSen                OK          46 degrees C / 114 degrees F
FPC 13 MQ 3 Chip                OK          46 degrees C / 114 degrees F
FPC 14 Intake                   OK          40 degrees C / 104 degrees F
FPC 14 Exhaust A                OK          50 degrees C / 122 degrees F
FPC 14 Exhaust B                OK          51 degrees C / 123 degrees F
FPC 14 LU 0 TSen                OK          50 degrees C / 122 degrees F
FPC 14 LU 0 Chip                OK          50 degrees C / 122 degrees F
FPC 14 LU 1 TSen                OK          50 degrees C / 122 degrees F
FPC 14 LU 1 Chip                OK          54 degrees C / 129 degrees F
FPC 14 LU 2 TSen                OK          50 degrees C / 122 degrees F
FPC 14 LU 2 Chip                OK          47 degrees C / 116 degrees F
FPC 14 LU 3 TSen                OK          50 degrees C / 122 degrees F
FPC 14 LU 3 Chip                OK          49 degrees C / 120 degrees F
FPC 14 MQ 0 TSen                OK          47 degrees C / 116 degrees F
FPC 14 MQ 0 Chip                OK          46 degrees C / 114 degrees F
FPC 14 MQ 1 TSen                OK          47 degrees C / 116 degrees F
FPC 14 MQ 1 Chip                OK          51 degrees C / 123 degrees F
FPC 14 MQ 2 TSen                OK          47 degrees C / 116 degrees F
FPC 14 MQ 2 Chip                OK          45 degrees C / 113 degrees F
FPC 14 MQ 3 TSen                OK          47 degrees C / 116 degrees F
FPC 14 MQ 3 Chip                OK          48 degrees C / 118 degrees F
FPC 15 Intake                   OK          44 degrees C / 111 degrees F
FPC 15 Exhaust A                OK          49 degrees C / 120 degrees F
FPC 15 Exhaust B                OK          60 degrees C / 140 degrees F
FPC 15 LU 0 TSen                OK          50 degrees C / 122 degrees F
FPC 15 LU 0 Chip                OK          56 degrees C / 132 degrees F
FPC 15 LU 1 TSen                OK          50 degrees C / 122 degrees F
FPC 15 LU 1 Chip                OK          50 degrees C / 122 degrees F
FPC 15 LU 2 TSen                OK          50 degrees C / 122 degrees F
FPC 15 LU 2 Chip                OK          58 degrees C / 136 degrees F
FPC 15 LU 3 TSen                OK          50 degrees C / 122 degrees F
```

```
FPC 15 LU 3 Chip              OK        63 degrees C / 145 degrees F
FPC 15 XM 0 TSen              OK        50 degrees C / 122 degrees F
FPC 15 XM 0 Chip              OK        56 degrees C / 132 degrees F
FPC 15 XF 0 TSen              OK        50 degrees C / 122 degrees F
FPC 15 XF 0 Chip              OK        68 degrees C / 154 degrees F
FPC 15 PLX Switch TSen        OK        50 degrees C / 122 degrees F
FPC 15 PLX Switch Chip        OK        56 degrees C / 132 degrees F
FPC 16 Intake                 OK        42 degrees C / 107 degrees F
FPC 16 Exhaust A              OK        51 degrees C / 123 degrees F
FPC 16 Exhaust B              OK        53 degrees C / 127 degrees F
FPC 16 LU 0 TSen              OK        51 degrees C / 123 degrees F
FPC 16 LU 0 Chip              OK        52 degrees C / 125 degrees F
FPC 16 LU 1 TSen              OK        51 degrees C / 123 degrees F
FPC 16 LU 1 Chip              OK        55 degrees C / 131 degrees F
FPC 16 LU 2 TSen              OK        51 degrees C / 123 degrees F
FPC 16 LU 2 Chip              OK        48 degrees C / 118 degrees F
FPC 16 LU 3 TSen              OK        51 degrees C / 123 degrees F
FPC 16 LU 3 Chip              OK        49 degrees C / 120 degrees F
FPC 16 MQ 0 TSen              OK        49 degrees C / 120 degrees F
FPC 16 MQ 0 Chip              OK        48 degrees C / 118 degrees F
FPC 16 MQ 1 TSen              OK        49 degrees C / 120 degrees F
FPC 16 MQ 1 Chip              OK        53 degrees C / 127 degrees F
FPC 16 MQ 2 TSen              OK        49 degrees C / 120 degrees F
FPC 16 MQ 2 Chip              OK        46 degrees C / 114 degrees F
FPC 16 MQ 3 TSen              OK        49 degrees C / 120 degrees F
FPC 16 MQ 3 Chip              OK        49 degrees C / 120 degrees F
FPC 17 Intake                 OK        43 degrees C / 109 degrees F
FPC 17 Exhaust A              OK        51 degrees C / 123 degrees F
FPC 17 Exhaust B              OK        55 degrees C / 131 degrees F
FPC 17 LU 0 TSen              OK        54 degrees C / 129 degrees F
FPC 17 LU 0 Chip              OK        57 degrees C / 134 degrees F
FPC 17 LU 1 TSen              OK        54 degrees C / 129 degrees F
FPC 17 LU 1 Chip              OK        60 degrees C / 140 degrees F
FPC 17 LU 2 TSen              OK        54 degrees C / 129 degrees F
FPC 17 LU 2 Chip              OK        53 degrees C / 127 degrees F
FPC 17 LU 3 TSen              OK        54 degrees C / 129 degrees F
FPC 17 LU 3 Chip              OK        53 degrees C / 127 degrees F
FPC 17 MQ 0 TSen              OK        49 degrees C / 120 degrees F
FPC 17 MQ 0 Chip              OK        50 degrees C / 122 degrees F
FPC 17 MQ 1 TSen              OK        49 degrees C / 120 degrees F
FPC 17 MQ 1 Chip              OK        54 degrees C / 129 degrees F
FPC 17 MQ 2 TSen              OK        49 degrees C / 120 degrees F
FPC 17 MQ 2 Chip              OK        47 degrees C / 116 degrees F
FPC 17 MQ 3 TSen              OK        49 degrees C / 120 degrees F
FPC 17 MQ 3 Chip              OK        51 degrees C / 123 degrees F
FPC 18 Intake                 OK        44 degrees C / 111 degrees F
FPC 18 Exhaust A              OK        53 degrees C / 127 degrees F
FPC 18 Exhaust B              OK        57 degrees C / 134 degrees F
FPC 18 LU 0 TSen              OK        56 degrees C / 132 degrees F
FPC 18 LU 0 Chip              OK        57 degrees C / 134 degrees F
FPC 18 LU 1 TSen              OK        56 degrees C / 132 degrees F
FPC 18 LU 1 Chip              OK        62 degrees C / 143 degrees F
FPC 18 LU 2 TSen              OK        56 degrees C / 132 degrees F
FPC 18 LU 2 Chip              OK        53 degrees C / 127 degrees F
FPC 18 LU 3 TSen              OK        56 degrees C / 132 degrees F
FPC 18 LU 3 Chip              OK        55 degrees C / 131 degrees F
FPC 18 MQ 0 TSen              OK        51 degrees C / 123 degrees F
FPC 18 MQ 0 Chip              OK        54 degrees C / 129 degrees F
FPC 18 MQ 1 TSen              OK        51 degrees C / 123 degrees F
FPC 18 MQ 1 Chip              OK        58 degrees C / 136 degrees F
FPC 18 MQ 2 TSen              OK        51 degrees C / 123 degrees F
```

```
FPC 18 MQ 2 Chip              OK        50 degrees C / 122 degrees F
FPC 18 MQ 3 TSen              OK        51 degrees C / 123 degrees F
FPC 18 MQ 3 Chip              OK        53 degrees C / 127 degrees F
FPC 19 Intake                 OK        48 degrees C / 118 degrees F
FPC 19 Exhaust A              OK        56 degrees C / 132 degrees F
FPC 19 Exhaust B              OK        64 degrees C / 147 degrees F
FPC 19 LU 0 TSen              OK        63 degrees C / 145 degrees F
FPC 19 LU 0 Chip              OK        64 degrees C / 147 degrees F
FPC 19 LU 1 TSen              OK        63 degrees C / 145 degrees F
FPC 19 LU 1 Chip              OK        70 degrees C / 158 degrees F
FPC 19 LU 2 TSen              OK        63 degrees C / 145 degrees F
FPC 19 LU 2 Chip              OK        61 degrees C / 141 degrees F
FPC 19 LU 3 TSen              OK        63 degrees C / 145 degrees F
FPC 19 LU 3 Chip              OK        62 degrees C / 143 degrees F
FPC 19 MQ 0 TSen              OK        56 degrees C / 132 degrees F
FPC 19 MQ 0 Chip              OK        60 degrees C / 140 degrees F
FPC 19 MQ 1 TSen              OK        56 degrees C / 132 degrees F
FPC 19 MQ 1 Chip              OK        62 degrees C / 143 degrees F
FPC 19 MQ 2 TSen              OK        56 degrees C / 132 degrees F
FPC 19 MQ 2 Chip              OK        56 degrees C / 132 degrees F
FPC 19 MQ 3 TSen              OK        56 degrees C / 132 degrees F
FPC 19 MQ 3 Chip              OK        57 degrees C / 134 degrees F
ADC 0 Intake                  OK        40 degrees C / 104 degrees F
ADC 0 Exhaust                 OK        52 degrees C / 125 degrees F
ADC 0 ADC-XF1                 OK        59 degrees C / 138 degrees F
ADC 0 ADC-XF0                 OK        66 degrees C / 150 degrees F
ADC 1 Intake                  OK        38 degrees C / 100 degrees F
ADC 1 Exhaust                 OK        50 degrees C / 122 degrees F
ADC 1 ADC-XF1                 OK        59 degrees C / 138 degrees F
ADC 1 ADC-XF0                 OK        63 degrees C / 145 degrees F
ADC 2 Intake                  OK        37 degrees C / 98 degrees F
ADC 2 Exhaust                 OK        52 degrees C / 125 degrees F
ADC 2 ADC-XF1                 OK        53 degrees C / 127 degrees F
ADC 2 ADC-XF0                 OK        61 degrees C / 141 degrees F
ADC 3 Intake                  OK        40 degrees C / 104 degrees F
ADC 3 Exhaust                 OK        51 degrees C / 123 degrees F
ADC 3 ADC-XF1                 OK        61 degrees C / 141 degrees F
ADC 3 ADC-XF0                 OK        64 degrees C / 147 degrees F
ADC 4 Intake                  OK        39 degrees C / 102 degrees F
ADC 4 Exhaust                 OK        51 degrees C / 123 degrees F
ADC 4 ADC-XF1                 OK        60 degrees C / 140 degrees F
ADC 4 ADC-XF0                 OK        63 degrees C / 145 degrees F
ADC 5 Intake                  OK        38 degrees C / 100 degrees F
ADC 5 Exhaust                 OK        54 degrees C / 129 degrees F
ADC 5 ADC-XF1                 OK        56 degrees C / 132 degrees F
ADC 5 ADC-XF0                 OK        67 degrees C / 152 degrees F
ADC 6 Intake                  OK        39 degrees C / 102 degrees F
ADC 6 Exhaust                 OK        52 degrees C / 125 degrees F
ADC 6 ADC-XF1                 OK        59 degrees C / 138 degrees F
ADC 6 ADC-XF0                 OK        66 degrees C / 150 degrees F
ADC 7 Intake                  OK        39 degrees C / 102 degrees F
ADC 7 Exhaust                 OK        54 degrees C / 129 degrees F
ADC 7 ADC-XF1                 OK        62 degrees C / 143 degrees F
ADC 7 ADC-XF0                 OK        70 degrees C / 158 degrees F
ADC 8 Intake                  OK        39 degrees C / 102 degrees F
ADC 8 Exhaust                 OK        52 degrees C / 125 degrees F
ADC 8 ADC-XF1                 OK        61 degrees C / 141 degrees F
ADC 8 ADC-XF0                 OK        65 degrees C / 149 degrees F
ADC 9 Intake                  OK        41 degrees C / 105 degrees F
ADC 9 Exhaust                 OK        51 degrees C / 123 degrees F
ADC 9 ADC-XF1                 OK        63 degrees C / 145 degrees F
```

```
        ADC 9 ADC-XF0                OK        63 degrees C / 145 degrees F
        ADC 10 Intake                OK        48 degrees C / 118 degrees F
        ADC 10 Exhaust               OK        53 degrees C / 127 degrees F
        ADC 10 ADC-XF1               OK        67 degrees C / 152 degrees F
        ADC 10 ADC-XF0               OK        66 degrees C / 150 degrees F
        ADC 12 Intake                OK        49 degrees C / 120 degrees F
        ADC 12 Exhaust               OK        54 degrees C / 129 degrees F
        ADC 12 ADC-XF1               OK        67 degrees C / 152 degrees F
        ADC 12 ADC-XF0               OK        67 degrees C / 152 degrees F
        ADC 13 Intake                OK        49 degrees C / 120 degrees F
        ADC 13 Exhaust               OK        57 degrees C / 134 degrees F
        ADC 13 ADC-XF1               OK        66 degrees C / 150 degrees F
        ADC 13 ADC-XF0               OK        69 degrees C / 156 degrees F
        ADC 14 Intake                OK        51 degrees C / 123 degrees F
        ADC 14 Exhaust               OK        59 degrees C / 138 degrees F
        ADC 14 ADC-XF1               OK        69 degrees C / 156 degrees F
        ADC 14 ADC-XF0               OK        74 degrees C / 165 degrees F
        ADC 15 Intake                OK        50 degrees C / 122 degrees F
        ADC 15 Exhaust               OK        59 degrees C / 138 degrees F
        ADC 15 ADC-XF1               OK        68 degrees C / 154 degrees F
        ADC 15 ADC-XF0               OK        69 degrees C / 156 degrees F
        ADC 16 Intake                OK        52 degrees C / 125 degrees F
        ADC 16 Exhaust               OK        58 degrees C / 136 degrees F
        ADC 16 ADC-XF1               OK        68 degrees C / 154 degrees F
        ADC 16 ADC-XF0               OK        70 degrees C / 158 degrees F
        ADC 17 Intake                OK        52 degrees C / 125 degrees F
        ADC 17 Exhaust               OK        59 degrees C / 138 degrees F
        ADC 17 ADC-XF1               OK        69 degrees C / 156 degrees F
        ADC 17 ADC-XF0               OK        71 degrees C / 159 degrees F
        ADC 18 Intake                OK        53 degrees C / 127 degrees F
        ADC 18 Exhaust               OK        59 degrees C / 138 degrees F
        ADC 18 ADC-XF1               OK        68 degrees C / 154 degrees F
        ADC 18 ADC-XF0               OK        73 degrees C / 163 degrees F
        ADC 19 Intake                OK        50 degrees C / 122 degrees F
        ADC 19 Exhaust               OK        59 degrees C / 138 degrees F
        ADC 19 ADC-XF1               OK        68 degrees C / 154 degrees F
        ADC 19 ADC-XF0               OK        72 degrees C / 161 degrees F
Fans    Fan Tray 0 Fan 1             OK        7440 RPM
        Fan Tray 0 Fan 2             OK        7200 RPM
        Fan Tray 0 Fan 3             OK        6960 RPM
        Fan Tray 0 Fan 4             OK        7200 RPM
        Fan Tray 0 Fan 5             OK        7080 RPM
        Fan Tray 0 Fan 6             OK        6840 RPM
        Fan Tray 1 Fan 1             OK        6840 RPM
        Fan Tray 1 Fan 2             OK        6960 RPM
        Fan Tray 1 Fan 3             OK        6960 RPM
        Fan Tray 1 Fan 4             OK        7080 RPM
        Fan Tray 1 Fan 5             OK        6960 RPM
        Fan Tray 1 Fan 6             OK        6960 RPM
        Fan Tray 2 Fan 1             OK        8640 RPM
        Fan Tray 2 Fan 2             OK        8640 RPM
        Fan Tray 2 Fan 3             OK        8760 RPM
        Fan Tray 2 Fan 4             OK        8760 RPM
        Fan Tray 2 Fan 5             OK        8640 RPM
        Fan Tray 2 Fan 6             OK        8640 RPM
        Fan Tray 3 Fan 1             OK        8520 RPM
        Fan Tray 3 Fan 2             OK        8520 RPM
        Fan Tray 3 Fan 3             OK        8640 RPM
        Fan Tray 3 Fan 4             OK        8640 RPM
        Fan Tray 3 Fan 5             OK        8520 RPM
        Fan Tray 3 Fan 6             OK        8520 RPM
```

show chassis environment (MX2020 Router with MPC5EQ and MPC6E)

```
Class Item                          Status     Measurement
Temp  PSM 0                         OK         32 degrees C / 89 degrees F
      PSM 1                         OK         32 degrees C / 89 degrees F
      PSM 2                         OK         32 degrees C / 89 degrees F
      PSM 3                         OK         32 degrees C / 89 degrees F
      PSM 4                         OK         32 degrees C / 89 degrees F
      PSM 5                         OK         33 degrees C / 91 degrees F
      PSM 6                         OK         32 degrees C / 89 degrees F
      PSM 7                         OK         32 degrees C / 89 degrees F
      PSM 8                         OK         32 degrees C / 89 degrees F
      PSM 9                         Absent
      PSM 10                        Absent
      PSM 11                        Absent
      PSM 12                        OK         33 degrees C / 91 degrees F
      PSM 13                        OK         33 degrees C / 91 degrees F
      PSM 14                        OK         34 degrees C / 93 degrees F
      PSM 15                        OK         34 degrees C / 93 degrees F
      PSM 16                        OK         33 degrees C / 91 degrees F
      PSM 17                        OK         33 degrees C / 91 degrees F
      PDM 0                         OK
      PDM 1                         OK
      PDM 2                         OK
      PDM 3                         OK
      CB 0 IntakeA-Zone0            OK         34 degrees C / 93 degrees F
      CB 0 IntakeB-Zone1            OK         26 degrees C / 78 degrees F
      CB 0 IntakeC-Zone0            OK         38 degrees C / 100 degrees F
      CB 0 ExhaustA-Zone0           OK         34 degrees C / 93 degrees F
      CB 0 ExhaustB-Zone1           OK         27 degrees C / 80 degrees F
      CB 0 TCBC-Zone0               OK         32 degrees C / 89 degrees F
      CB 1 IntakeA-Zone0            OK         24 degrees C / 75 degrees F
      CB 1 IntakeB-Zone1            OK         22 degrees C / 71 degrees F
      CB 1 IntakeC-Zone0            OK         34 degrees C / 93 degrees F
      CB 1 ExhaustA-Zone0           OK         31 degrees C / 87 degrees F
      CB 1 ExhaustB-Zone1           OK         24 degrees C / 75 degrees F
      CB 1 TCBC-Zone0               OK         27 degrees C / 80 degrees F
      SPMB 0 Intake                 OK         25 degrees C / 77 degrees F
      SPMB 1 Intake                 OK         23 degrees C / 73 degrees F
      Routing Engine 0              OK         28 degrees C / 82 degrees F
      Routing Engine 0 CPU          OK         25 degrees C / 77 degrees F
      Routing Engine 1              OK         25 degrees C / 77 degrees F
      Routing Engine 1 CPU          OK         24 degrees C / 75 degrees F
      SFB 0 Intake-Zone0            OK         45 degrees C / 113 degrees F
      SFB 0 Exhaust-Zone1           OK         34 degrees C / 93 degrees F
      SFB 0 IntakeA-Zone0           OK         32 degrees C / 89 degrees F
      SFB 0 IntakeB-Zone1           OK         28 degrees C / 82 degrees F
      SFB 0 Exhaust-Zone0           OK         36 degrees C / 96 degrees F
      SFB 0 SFB-XF2-Zone1           OK         46 degrees C / 114 degrees F
      SFB 0 SFB-XF1-Zone0           OK         48 degrees C / 118 degrees F
      SFB 0 SFB-XF0-Zone0           OK         60 degrees C / 140 degrees F
      SFB 1 Intake-Zone0            OK         44 degrees C / 111 degrees F
      SFB 1 Exhaust-Zone1           OK         34 degrees C / 93 degrees F
      SFB 1 IntakeA-Zone0           OK         35 degrees C / 95 degrees F
      SFB 1 IntakeB-Zone1           OK         27 degrees C / 80 degrees F
      SFB 1 Exhaust-Zone0           OK         37 degrees C / 98 degrees F
      SFB 1 SFB-XF2-Zone1           OK         47 degrees C / 116 degrees F
      SFB 1 SFB-XF1-Zone0           OK         49 degrees C / 120 degrees F
 SFB 1 SFB-XF0-Zone0            OK         56 degrees C / 132 degrees F
      SFB 2 Intake-Zone0            OK         41 degrees C / 105 degrees F
```

```
     SFB 2 Exhaust-Zone1            OK         34 degrees C / 93 degrees F
     SFB 2 IntakeA-Zone0            OK         35 degrees C / 95 degrees F
     SFB 2 IntakeB-Zone1            OK         28 degrees C / 82 degrees F
     SFB 2 Exhaust-Zone0            OK         37 degrees C / 98 degrees F
     SFB 2 SFB-XF2-Zone1            OK         47 degrees C / 116 degrees F
     SFB 2 SFB-XF1-Zone0            OK         55 degrees C / 131 degrees F
     SFB 2 SFB-XF0-Zone0            OK         55 degrees C / 131 degrees F
     SFB 3 Intake-Zone0             OK         43 degrees C / 109 degrees F
     SFB 3 Exhaust-Zone1            OK         33 degrees C / 91 degrees F
     SFB 3 IntakeA-Zone0            OK         35 degrees C / 95 degrees F
     SFB 3 IntakeB-Zone1            OK         27 degrees C / 80 degrees F
     SFB 3 Exhaust-Zone0            OK         36 degrees C / 96 degrees F
     SFB 3 SFB-XF2-Zone1            OK         46 degrees C / 114 degrees F
     SFB 3 SFB-XF1-Zone0            OK         46 degrees C / 114 degrees F
     SFB 3 SFB-XF0-Zone0            OK         57 degrees C / 134 degrees F
     SFB 4 Intake-Zone0             OK         36 degrees C / 96 degrees F
     SFB 4 Exhaust-Zone1            OK         32 degrees C / 89 degrees F
     SFB 4 IntakeA-Zone0            OK         31 degrees C / 87 degrees F
     SFB 4 IntakeB-Zone1            OK         26 degrees C / 78 degrees F
     SFB 4 Exhaust-Zone0            OK         32 degrees C / 89 degrees F
     SFB 4 SFB-XF2-Zone1            OK         44 degrees C / 111 degrees F
     SFB 4 SFB-XF1-Zone0            OK         45 degrees C / 113 degrees F
     SFB 4 SFB-XF0-Zone0            OK         52 degrees C / 125 degrees F
     SFB 5 Intake-Zone0             OK         31 degrees C / 87 degrees F
     SFB 5 Exhaust-Zone1            OK         30 degrees C / 86 degrees F
     SFB 5 IntakeA-Zone0            OK         26 degrees C / 78 degrees F
     SFB 5 IntakeB-Zone1            OK         24 degrees C / 75 degrees F
     SFB 5 Exhaust-Zone0            OK         29 degrees C / 84 degrees F
     SFB 5 SFB-XF2-Zone1            OK         43 degrees C / 109 degrees F
     SFB 5 SFB-XF1-Zone0            OK         47 degrees C / 116 degrees F
     SFB 5 SFB-XF0-Zone0            OK         49 degrees C / 120 degrees F
     SFB 6 Intake-Zone0             OK         30 degrees C / 86 degrees F
     SFB 6 Exhaust-Zone1            OK         29 degrees C / 84 degrees F
     SFB 6 IntakeA-Zone0            OK         25 degrees C / 77 degrees F
     SFB 6 IntakeB-Zone1            OK         24 degrees C / 75 degrees F
     SFB 6 Exhaust-Zone0            OK         29 degrees C / 84 degrees F
     SFB 6 SFB-XF2-Zone1            OK         43 degrees C / 109 degrees F
     SFB 6 SFB-XF1-Zone0            OK         44 degrees C / 111 degrees F
     SFB 6 SFB-XF0-Zone0            OK         45 degrees C / 113 degrees F
     SFB 7 Intake-Zone0             OK         31 degrees C / 87 degrees F
     SFB 7 Exhaust-Zone1            OK         30 degrees C / 86 degrees F
     SFB 7 IntakeA-Zone0            OK         26 degrees C / 78 degrees F
     SFB 7 IntakeB-Zone1            OK         24 degrees C / 75 degrees F
     SFB 7 Exhaust-Zone0            OK         28 degrees C / 82 degrees F
     SFB 7 SFB-XF2-Zone1            OK         50 degrees C / 122 degrees F
     SFB 7 SFB-XF1-Zone0            OK         43 degrees C / 109 degrees F
     SFB 7 SFB-XF0-Zone0            OK         47 degrees C / 116 degrees F
     FPC 0 Intake                   OK         31 degrees C / 87 degrees F
     FPC 0 Exhaust A                OK         49 degrees C / 120 degrees F
     FPC 0 Exhaust B                OK         43 degrees C / 109 degrees F
     FPC 0 XL TSen                  OK         42 degrees C / 107 degrees F
     FPC 0 XL Chip                  OK         46 degrees C / 114 degrees F
     FPC 0 XL_XR0 TSen              OK         42 degrees C / 107 degrees F
     FPC 0 XL_XR0 Chip              OK         48 degrees C / 118 degrees F
FPC 0 XL_XR1 TSen              OK         42 degrees C / 107 degrees F
     FPC 0 XL_XR1 Chip              OK         48 degrees C / 118 degrees F
     FPC 0 XQ TSen                  OK         42 degrees C / 107 degrees F
     FPC 0 XQ Chip                  OK         44 degrees C / 111 degrees F
     FPC 0 XQ_XR0 TSen              OK         42 degrees C / 107 degrees F
     FPC 0 XQ_XR0 Chip              OK         57 degrees C / 134 degrees F
     FPC 0 XQ_XR1 TSen              OK         42 degrees C / 107 degrees F
```

```
     FPC 0 XQ_XR1 Chip              OK         55 degrees C / 131 degrees F
     FPC 0 XM 0 TSen                OK         48 degrees C / 118 degrees F
     FPC 0 XM 0 Chip                OK         62 degrees C / 143 degrees F
     FPC 0 XM 1 TSen                OK         48 degrees C / 118 degrees F
     FPC 0 XM 1 Chip                OK         44 degrees C / 111 degrees F
     FPC 0 PLX PCIe Switch TSe      OK         48 degrees C / 118 degrees F
     FPC 0 PLX PCIe Switch Chi      OK         57 degrees C / 134 degrees F
     FPC 1 Intake                   OK         29 degrees C / 84 degrees F
     FPC 1 Exhaust A                OK         36 degrees C / 96 degrees F
     FPC 1 Exhaust B                OK         44 degrees C / 111 degrees F
     FPC 1 LU 0 TSen                OK         38 degrees C / 100 degrees F
     FPC 1 LU 0 Chip                OK         45 degrees C / 113 degrees F
     FPC 1 LU 1 TSen                OK         38 degrees C / 100 degrees F
     FPC 1 LU 1 Chip                OK         38 degrees C / 100 degrees F
     FPC 1 LU 2 TSen                OK         38 degrees C / 100 degrees F
     FPC 1 LU 2 Chip                OK         42 degrees C / 107 degrees F
     FPC 1 LU 3 TSen                OK         38 degrees C / 100 degrees F
     FPC 1 LU 3 Chip                OK         47 degrees C / 116 degrees F
     FPC 1 XM 0 TSen                OK         38 degrees C / 100 degrees F
     FPC 1 XM 0 Chip                OK         44 degrees C / 111 degrees F
     FPC 1 XF 0 TSen                OK         38 degrees C / 100 degrees F
     FPC 1 XF 0 Chip                OK         54 degrees C / 129 degrees F
     FPC 1 PLX Switch TSen          OK         38 degrees C / 100 degrees F
     FPC 1 PLX Switch Chip          OK         41 degrees C / 105 degrees F
     FPC 2 Intake                   OK         28 degrees C / 82 degrees F
     FPC 2 Exhaust A                OK         28 degrees C / 82 degrees F
     FPC 2 Exhaust B                OK         28 degrees C / 82 degrees F
     FPC 2 LU 0 TSen                OK         40 degrees C / 104 degrees F
     FPC 2 LU 0 Chip                OK         40 degrees C / 104 degrees F
     FPC 2 LU 1 TSen                OK         40 degrees C / 104 degrees F
     FPC 2 LU 1 Chip                OK         41 degrees C / 105 degrees F
     FPC 2 LU 2 TSen                OK         40 degrees C / 104 degrees F
     FPC 2 LU 2 Chip                OK         34 degrees C / 93 degrees F
     FPC 2 LU 3 TSen                OK         40 degrees C / 104 degrees F
     FPC 2 LU 3 Chip                OK         38 degrees C / 100 degrees F
     FPC 2 XM 0 TSen                OK         40 degrees C / 104 degrees F
     FPC 2 XM 0 Chip                OK         47 degrees C / 116 degrees F
     FPC 2 XM 1 TSen                OK         40 degrees C / 104 degrees F
     FPC 2 XM 1 Chip                OK         42 degrees C / 107 degrees F
     FPC 2 PLX Switch TSen          OK         40 degrees C / 104 degrees F
     FPC 2 PLX Switch Chip          OK         39 degrees C / 102 degrees F
     FPC 3 Intake                   OK         27 degrees C / 80 degrees F
     FPC 3 Exhaust A                OK         38 degrees C / 100 degrees F
     FPC 3 Exhaust B                OK         31 degrees C / 87 degrees F
     FPC 3 QX 0 TSen                OK         38 degrees C / 100 degrees F
     FPC 3 QX 0 Chip                OK         42 degrees C / 107 degrees F
     FPC 3 LU 0 TCAM TSen           OK         38 degrees C / 100 degrees F
     FPC 3 LU 0 TCAM Chip           OK         43 degrees C / 109 degrees F
     FPC 3 LU 0 TSen                OK         38 degrees C / 100 degrees F
FPC 3 LU 0 Chip                OK         42 degrees C / 107 degrees F
     FPC 3 MQ 0 TSen                OK         38 degrees C / 100 degrees F
     FPC 3 MQ 0 Chip                OK         39 degrees C / 102 degrees F
     FPC 3 QX 1 TSen                OK         32 degrees C / 89 degrees F
     FPC 3 QX 1 Chip                OK         36 degrees C / 96 degrees F
     FPC 3 LU 1 TCAM TSen           OK         32 degrees C / 89 degrees F
     FPC 3 LU 1 TCAM Chip           OK         35 degrees C / 95 degrees F
     FPC 3 LU 1 TSen                OK         32 degrees C / 89 degrees F
     FPC 3 LU 1 Chip                OK         37 degrees C / 98 degrees F
     FPC 3 MQ 1 TSen                OK         32 degrees C / 89 degrees F
     FPC 3 MQ 1 Chip                OK         36 degrees C / 96 degrees F
     FPC 4 Intake                   OK         29 degrees C / 84 degrees F
```

```
      FPC 4 Exhaust A                OK         36 degrees C / 96 degrees F
      FPC 4 Exhaust B                OK         40 degrees C / 104 degrees F
      FPC 4 XL TSen                  OK         39 degrees C / 102 degrees F
      FPC 4 XL Chip                  OK         42 degrees C / 107 degrees F
      FPC 4 XL_XR0 TSen              OK         39 degrees C / 102 degrees F
      FPC 4 XL_XR0 Chip              OK         45 degrees C / 113 degrees F
      FPC 4 XL_XR1 TSen              OK         39 degrees C / 102 degrees F
      FPC 4 XL_XR1 Chip              OK         46 degrees C / 114 degrees F
      FPC 4 XQ TSen                  OK         39 degrees C / 102 degrees F
      FPC 4 XQ Chip                  OK         42 degrees C / 107 degrees F
      FPC 4 XQ_XR0 TSen              OK         39 degrees C / 102 degrees F
      FPC 4 XQ_XR0 Chip              OK         54 degrees C / 129 degrees F
      FPC 4 XQ_XR1 TSen              OK         39 degrees C / 102 degrees F
      FPC 4 XQ_XR1 Chip              OK         53 degrees C / 127 degrees F
      FPC 4 XM 0 TSen                OK         45 degrees C / 113 degrees F
      FPC 4 XM 0 Chip                OK         59 degrees C / 138 degrees F
      FPC 4 XM 1 TSen                OK         45 degrees C / 113 degrees F
      FPC 4 XM 1 Chip                OK         41 degrees C / 105 degrees F
      FPC 4 PLX PCIe Switch TSe      OK         45 degrees C / 113 degrees F
      FPC 4 PLX PCIe Switch Chi      OK         58 degrees C / 136 degrees F
      FPC 5 Intake                   OK         29 degrees C / 84 degrees F
      FPC 5 Exhaust A                OK         33 degrees C / 91 degrees F
      FPC 5 Exhaust B                OK         39 degrees C / 102 degrees F
      FPC 5 LU 0 TSen                OK         40 degrees C / 104 degrees F
      FPC 5 LU 0 Chip                OK         40 degrees C / 104 degrees F
      FPC 5 LU 1 TSen                OK         40 degrees C / 104 degrees F
      FPC 5 LU 1 Chip                OK         45 degrees C / 113 degrees F
      FPC 5 LU 2 TSen                OK         40 degrees C / 104 degrees F
      FPC 5 LU 2 Chip                OK         40 degrees C / 104 degrees F
      FPC 5 LU 3 TSen                OK         40 degrees C / 104 degrees F
      FPC 5 LU 3 Chip                OK         46 degrees C / 114 degrees F
      FPC 5 MQ 0 TSen                OK         32 degrees C / 89 degrees F
      FPC 5 MQ 0 Chip                OK         33 degrees C / 91 degrees F
      FPC 5 MQ 1 TSen                OK         32 degrees C / 89 degrees F
      FPC 5 MQ 1 Chip                OK         35 degrees C / 95 degrees F
      FPC 5 MQ 2 TSen                OK         32 degrees C / 89 degrees F
      FPC 5 MQ 2 Chip                OK         32 degrees C / 89 degrees F
      FPC 5 MQ 3 TSen                OK         32 degrees C / 89 degrees F
      FPC 5 MQ 3 Chip                OK         32 degrees C / 89 degrees F
      FPC 9 Intake                   OK         25 degrees C / 77 degrees F
      FPC 9 Exhaust A                OK         37 degrees C / 98 degrees F
      FPC 9 Exhaust B                OK         40 degrees C / 104 degrees F
      FPC 9 XL 0 TSen                OK         40 degrees C / 104 degrees F
...
```

show chassis environment (MX2010 Router)

```
user@host> show chassis environment
Class Item                           Status     Measurement
Temp  PSM 0                          OK         7 degrees C / 44 degrees F
      PSM 1                          OK         7 degrees C / 44 degrees F
      PSM 2                          OK         7 degrees C / 44 degrees F
      PSM 3                          OK         6 degrees C / 42 degrees F
      PSM 4                          OK         6 degrees C / 42 degrees F
      PSM 5                          OK         6 degrees C / 42 degrees F
      PSM 6                          OK         6 degrees C / 42 degrees F
      PSM 7                          OK         7 degrees C / 44 degrees F
      PSM 8                          OK         7 degrees C / 44 degrees F
      PDM 0                          OK
      PDM 1                          Absent
      CB 0 IntakeA-Zone0             OK         14 degrees C / 57 degrees F
```

```
        CB 0 IntakeB-Zone1            OK         7 degrees C / 44 degrees F
        CB 0 IntakeC-Zone0            OK         22 degrees C / 71 degrees F
        CB 0 ExhaustA-Zone0           OK         14 degrees C / 57 degrees F
        CB 0 ExhaustB-Zone1           OK         9 degrees C / 48 degrees F
        CB 0 TCBC-Zone0               OK         11 degrees C / 51 degrees F
        CB 1 IntakeA-Zone0            OK         9 degrees C / 48 degrees F
        CB 1 IntakeB-Zone1            OK         5 degrees C / 41 degrees F
        CB 1 IntakeC-Zone0            OK         20 degrees C / 68 degrees F
        CB 1 ExhaustA-Zone0           OK         12 degrees C / 53 degrees F
        CB 1 ExhaustB-Zone1           OK         7 degrees C / 44 degrees F
        CB 1 TCBC-Zone0               OK         10 degrees C / 50 degrees F
        SPMB 0 Intake                 OK         5 degrees C / 41 degrees F
        SPMB 1 Intake                 OK         4 degrees C / 39 degrees F
        Routing Engine 0              OK         9 degrees C / 48 degrees F
        Routing Engine 0 CPU          OK         9 degrees C / 48 degrees F
        Routing Engine 1              OK         6 degrees C / 42 degrees F
        Routing Engine 1 CPU          OK         6 degrees C / 42 degrees F
        SFB 0 Intake-Zone0            OK         26 degrees C / 78 degrees F
        SFB 0 Exhaust-Zone1           OK         17 degrees C / 62 degrees F
        SFB 0 IntakeA-Zone0           OK         16 degrees C / 60 degrees F
        SFB 0 IntakeB-Zone1           OK         11 degrees C / 51 degrees F
        SFB 0 Exhaust-Zone0           OK         18 degrees C / 64 degrees F
        SFB 0 SFB-XF2-Zone1           OK         25 degrees C / 77 degrees F
        SFB 0 SFB-XF1-Zone0           OK         23 degrees C / 73 degrees F
        SFB 0 SFB-XF0-Zone0           OK         33 degrees C / 91 degrees F
        SFB 1 Intake-Zone0            OK         27 degrees C / 80 degrees F
        SFB 1 Exhaust-Zone1           OK         15 degrees C / 59 degrees F
        SFB 1 IntakeA-Zone0           OK         20 degrees C / 68 degrees F
        SFB 1 IntakeB-Zone1           OK         10 degrees C / 50 degrees F
        SFB 1 Exhaust-Zone0           OK         19 degrees C / 66 degrees F
        SFB 1 SFB-XF2-Zone1           OK         26 degrees C / 78 degrees F
        SFB 1 SFB-XF1-Zone0           OK         27 degrees C / 80 degrees F
        SFB 1 SFB-XF0-Zone0           OK         32 degrees C / 89 degrees F
        SFB 2 Intake-Zone0            OK         21 degrees C / 69 degrees F
        SFB 2 Exhaust-Zone1           OK         13 degrees C / 55 degrees F
        SFB 2 IntakeA-Zone0           OK         18 degrees C / 64 degrees F
        SFB 2 IntakeB-Zone1           OK         9 degrees C / 48 degrees F
        SFB 2 Exhaust-Zone0           OK         16 degrees C / 60 degrees F
        SFB 2 SFB-XF2-Zone1           OK         24 degrees C / 75 degrees F
        SFB 2 SFB-XF1-Zone0           OK         21 degrees C / 69 degrees F
        SFB 2 SFB-XF0-Zone0           OK         26 degrees C / 78 degrees F
        SFB 4 Intake-Zone0            OK         28 degrees C / 82 degrees F
        SFB 4 Exhaust-Zone1           OK         16 degrees C / 60 degrees F
SFB 4 IntakeA-Zone0           OK         18 degrees C / 64 degrees F
        SFB 4 IntakeB-Zone1           OK         11 degrees C / 51 degrees F
        SFB 4 Exhaust-Zone0           OK         19 degrees C / 66 degrees F
        SFB 4 SFB-XF2-Zone1           OK         27 degrees C / 80 degrees F
        SFB 4 SFB-XF1-Zone0           OK         27 degrees C / 80 degrees F
        SFB 4 SFB-XF0-Zone0           OK         32 degrees C / 89 degrees F
        SFB 5 Intake-Zone0            OK         22 degrees C / 71 degrees F
        SFB 5 Exhaust-Zone1           OK         14 degrees C / 57 degrees F
        SFB 5 IntakeA-Zone0           OK         18 degrees C / 64 degrees F
        SFB 5 IntakeB-Zone1           OK         10 degrees C / 50 degrees F
        SFB 5 Exhaust-Zone0           OK         17 degrees C / 62 degrees F
        SFB 5 SFB-XF2-Zone1           OK         22 degrees C / 71 degrees F
        SFB 5 SFB-XF1-Zone0           OK         29 degrees C / 84 degrees F
        SFB 5 SFB-XF0-Zone0           OK         27 degrees C / 80 degrees F
        SFB 6 Intake-Zone0            OK         27 degrees C / 80 degrees F
        SFB 6 Exhaust-Zone1           OK         13 degrees C / 55 degrees F
        SFB 6 IntakeA-Zone0           OK         19 degrees C / 66 degrees F
        SFB 6 IntakeB-Zone1           OK         10 degrees C / 50 degrees F
```

```
        SFB 6 Exhaust-Zone0            OK         20 degrees C / 68 degrees F
        SFB 6 SFB-XF2-Zone1            OK         24 degrees C / 75 degrees F
        SFB 6 SFB-XF1-Zone0            OK         32 degrees C / 89 degrees F
        SFB 6 SFB-XF0-Zone0            OK         33 degrees C / 91 degrees F
        SFB 7 Intake-Zone0             OK         25 degrees C / 77 degrees F
        SFB 7 Exhaust-Zone1            OK         13 degrees C / 55 degrees F
        SFB 7 IntakeA-Zone0            OK         14 degrees C / 57 degrees F
        SFB 7 IntakeB-Zone1            OK         8 degrees C / 46 degrees F
        SFB 7 Exhaust-Zone0            OK         17 degrees C / 62 degrees F
        SFB 7 SFB-XF2-Zone1            OK         21 degrees C / 69 degrees F
        SFB 7 SFB-XF1-Zone0            OK         21 degrees C / 69 degrees F
        SFB 7 SFB-XF0-Zone0            OK         33 degrees C / 91 degrees F
        FPC 0 Intake                   OK         13 degrees C / 55 degrees F
        FPC 0 Exhaust A                OK         13 degrees C / 55 degrees F
        FPC 0 Exhaust B                OK         14 degrees C / 57 degrees F
        FPC 0 LU 0 TSen                OK         28 degrees C / 82 degrees F
        FPC 0 LU 0 Chip                OK         25 degrees C / 77 degrees F
        FPC 0 LU 1 TSen                OK         28 degrees C / 82 degrees F
        FPC 0 LU 1 Chip                OK         27 degrees C / 80 degrees F
        FPC 0 LU 2 TSen                OK         28 degrees C / 82 degrees F
        FPC 0 LU 2 Chip                OK         19 degrees C / 66 degrees F
        FPC 0 LU 3 TSen                OK         28 degrees C / 82 degrees F
        FPC 0 LU 3 Chip                OK         23 degrees C / 73 degrees F
        FPC 0 XM 0 TSen                OK         28 degrees C / 82 degrees F
        FPC 0 XM 0 Chip                OK         33 degrees C / 91 degrees F
        FPC 0 XM 1 TSen                OK         28 degrees C / 82 degrees F
        FPC 0 XM 1 Chip                OK         26 degrees C / 78 degrees F
        FPC 0 PLX Switch TSen          OK         28 degrees C / 82 degrees F
        FPC 0 PLX Switch Chip          OK         26 degrees C / 78 degrees F
        FPC 1 Intake                   OK         10 degrees C / 50 degrees F
        FPC 1 Exhaust A                OK         24 degrees C / 75 degrees F
        FPC 1 Exhaust B                OK         28 degrees C / 82 degrees F
        FPC 1 LU 0 TSen                OK         22 degrees C / 71 degrees F
        FPC 1 LU 0 Chip                OK         31 degrees C / 87 degrees F
        FPC 1 LU 1 TSen                OK         22 degrees C / 71 degrees F
        FPC 1 LU 1 Chip                OK         21 degrees C / 69 degrees F
        FPC 1 LU 2 TSen                OK         22 degrees C / 71 degrees F
        FPC 1 LU 2 Chip                OK         25 degrees C / 77 degrees F
        FPC 1 LU 3 TSen                OK         22 degrees C / 71 degrees F
        FPC 1 LU 3 Chip                OK         33 degrees C / 91 degrees F
        FPC 1 XM 0 TSen                OK         22 degrees C / 71 degrees F
        FPC 1 XM 0 Chip                OK         30 degrees C / 86 degrees F
        FPC 1 XF 0 TSen                OK         22 degrees C / 71 degrees F
        FPC 1 XF 0 Chip                OK         37 degrees C / 98 degrees F
        FPC 1 PLX Switch TSen          OK         22 degrees C / 71 degrees F
FPC 1 PLX Switch Chip          OK         22 degrees C / 71 degrees F
        FPC 2 Intake                   OK         9 degrees C / 48 degrees F
        FPC 2 Exhaust A                OK         10 degrees C / 50 degrees F
        FPC 2 Exhaust B                OK         10 degrees C / 50 degrees F
        FPC 2 LU 0 TSen                OK         26 degrees C / 78 degrees F
        FPC 2 LU 0 Chip                OK         25 degrees C / 77 degrees F
        FPC 2 LU 1 TSen                OK         26 degrees C / 78 degrees F
        FPC 2 LU 1 Chip                OK         26 degrees C / 78 degrees F
        FPC 2 LU 2 TSen                OK         26 degrees C / 78 degrees F
        FPC 2 LU 2 Chip                OK         17 degrees C / 62 degrees F
        FPC 2 LU 3 TSen                OK         26 degrees C / 78 degrees F
        FPC 2 LU 3 Chip                OK         22 degrees C / 71 degrees F
        FPC 2 XM 0 TSen                OK         26 degrees C / 78 degrees F
        FPC 2 XM 0 Chip                OK         34 degrees C / 93 degrees F
        FPC 2 XM 1 TSen                OK         26 degrees C / 78 degrees F
        FPC 2 XM 1 Chip                OK         26 degrees C / 78 degrees F
```

```
     FPC 2 PLX Switch TSen          OK         26 degrees C / 78 degrees F
     FPC 2 PLX Switch Chip          OK         20 degrees C / 68 degrees F
     FPC 3 Intake                   OK         12 degrees C / 53 degrees F
     FPC 3 Exhaust A                OK         16 degrees C / 60 degrees F
     FPC 3 Exhaust B                OK         26 degrees C / 78 degrees F
     FPC 3 LU 0 TSen                OK         23 degrees C / 73 degrees F
     FPC 3 LU 0 Chip                OK         26 degrees C / 78 degrees F
     FPC 3 LU 1 TSen                OK         23 degrees C / 73 degrees F
     FPC 3 LU 1 Chip                OK         27 degrees C / 80 degrees F
     FPC 3 LU 2 TSen                OK         23 degrees C / 73 degrees F
     FPC 3 LU 2 Chip                OK         22 degrees C / 71 degrees F
     FPC 3 LU 3 TSen                OK         23 degrees C / 73 degrees F
     FPC 3 LU 3 Chip                OK         21 degrees C / 69 degrees F
     FPC 3 MQ 0 TSen                OK         15 degrees C / 59 degrees F
     FPC 3 MQ 0 Chip                OK         18 degrees C / 64 degrees F
     FPC 3 MQ 1 TSen                OK         15 degrees C / 59 degrees F
     FPC 3 MQ 1 Chip                OK         20 degrees C / 68 degrees F
     FPC 3 MQ 2 TSen                OK         15 degrees C / 59 degrees F
     FPC 3 MQ 2 Chip                OK         17 degrees C / 62 degrees F
     FPC 3 MQ 3 TSen                OK         15 degrees C / 59 degrees F
     FPC 3 MQ 3 Chip                OK         16 degrees C / 60 degrees F
     FPC 4 Intake                   OK         11 degrees C / 51 degrees F
     FPC 4 Exhaust A                OK         22 degrees C / 71 degrees F
     FPC 4 Exhaust B                OK         28 degrees C / 82 degrees F
     FPC 4 LU 0 TSen                OK         22 degrees C / 71 degrees F
     FPC 4 LU 0 Chip                OK         33 degrees C / 91 degrees F
     FPC 4 LU 1 TSen                OK         22 degrees C / 71 degrees F
     FPC 4 LU 1 Chip                OK         21 degrees C / 69 degrees F
     FPC 4 LU 2 TSen                OK         22 degrees C / 71 degrees F
     FPC 4 LU 2 Chip                OK         26 degrees C / 78 degrees F
     FPC 4 LU 3 TSen                OK         22 degrees C / 71 degrees F
     FPC 4 LU 3 Chip                OK         33 degrees C / 91 degrees F
     FPC 4 XM 0 TSen                OK         22 degrees C / 71 degrees F
     FPC 4 XM 0 Chip                OK         30 degrees C / 86 degrees F
     FPC 4 XF 0 TSen                OK         22 degrees C / 71 degrees F
     FPC 4 XF 0 Chip                OK         37 degrees C / 98 degrees F
     FPC 4 PLX Switch TSen          OK         22 degrees C / 71 degrees F
     FPC 4 PLX Switch Chip          OK         23 degrees C / 73 degrees F
     FPC 5 Intake                   OK         12 degrees C / 53 degrees F
     FPC 5 Exhaust A                OK         12 degrees C / 53 degrees F
FPC 5 Exhaust B                OK         12 degrees C / 53 degrees F
     FPC 5 LU 0 TSen                OK         27 degrees C / 80 degrees F
     FPC 5 LU 0 Chip                OK         28 degrees C / 82 degrees F
     FPC 5 LU 1 TSen                OK         27 degrees C / 80 degrees F
     FPC 5 LU 1 Chip                OK         27 degrees C / 80 degrees F
     FPC 5 LU 2 TSen                OK         27 degrees C / 80 degrees F
     FPC 5 LU 2 Chip                OK         19 degrees C / 66 degrees F
     FPC 5 LU 3 TSen                OK         27 degrees C / 80 degrees F
     FPC 5 LU 3 Chip                OK         22 degrees C / 71 degrees F
     FPC 5 XM 0 TSen                OK         27 degrees C / 80 degrees F
     FPC 5 XM 0 Chip                OK         36 degrees C / 96 degrees F
     FPC 5 XM 1 TSen                OK         27 degrees C / 80 degrees F
     FPC 5 XM 1 Chip                OK         26 degrees C / 78 degrees F
     FPC 5 PLX Switch TSen          OK         27 degrees C / 80 degrees F
     FPC 5 PLX Switch Chip          OK         24 degrees C / 75 degrees F
     FPC 6 Intake                   OK         12 degrees C / 53 degrees F
     FPC 6 Exhaust A                OK         17 degrees C / 62 degrees F
     FPC 6 Exhaust B                OK         28 degrees C / 82 degrees F
     FPC 6 LU 0 TSen                OK         24 degrees C / 75 degrees F
     FPC 6 LU 0 Chip                OK         29 degrees C / 84 degrees F
     FPC 6 LU 1 TSen                OK         24 degrees C / 75 degrees F
```

```
     FPC 6 LU 1 Chip                OK         30 degrees C / 86 degrees F
     FPC 6 LU 2 TSen                OK         24 degrees C / 75 degrees F
     FPC 6 LU 2 Chip                OK         24 degrees C / 75 degrees F
     FPC 6 LU 3 TSen                OK         24 degrees C / 75 degrees F
     FPC 6 LU 3 Chip                OK         22 degrees C / 71 degrees F
     FPC 6 MQ 0 TSen                OK         16 degrees C / 60 degrees F
     FPC 6 MQ 0 Chip                OK         19 degrees C / 66 degrees F
     FPC 6 MQ 1 TSen                OK         16 degrees C / 60 degrees F
     FPC 6 MQ 1 Chip                OK         20 degrees C / 68 degrees F
     FPC 6 MQ 2 TSen                OK         16 degrees C / 60 degrees F
     FPC 6 MQ 2 Chip                OK         17 degrees C / 62 degrees F
     FPC 6 MQ 3 TSen                OK         16 degrees C / 60 degrees F
     FPC 6 MQ 3 Chip                OK         16 degrees C / 60 degrees F
     FPC 7 Intake                   OK         10 degrees C / 50 degrees F
     FPC 7 Exhaust A                OK         10 degrees C / 50 degrees F
     FPC 7 Exhaust B                OK         11 degrees C / 51 degrees F
     FPC 7 LU 0 TSen                OK         26 degrees C / 78 degrees F
     FPC 7 LU 0 Chip                OK         26 degrees C / 78 degrees F
     FPC 7 LU 1 TSen                OK         26 degrees C / 78 degrees F
     FPC 7 LU 1 Chip                OK         29 degrees C / 84 degrees F
     FPC 7 LU 2 TSen                OK         26 degrees C / 78 degrees F
     FPC 7 LU 2 Chip                OK         19 degrees C / 66 degrees F
     FPC 7 LU 3 TSen                OK         26 degrees C / 78 degrees F
     FPC 7 LU 3 Chip                OK         24 degrees C / 75 degrees F
     FPC 7 XM 0 TSen                OK         26 degrees C / 78 degrees F
     FPC 7 XM 0 Chip                OK         34 degrees C / 93 degrees F
     FPC 7 XM 1 TSen                OK         26 degrees C / 78 degrees F
     FPC 7 XM 1 Chip                OK         32 degrees C / 89 degrees F
     FPC 7 PLX Switch TSen          OK         26 degrees C / 78 degrees F
     FPC 7 PLX Switch Chip          OK         22 degrees C / 71 degrees F
     FPC 8 Intake                   OK         10 degrees C / 50 degrees F
     FPC 8 Exhaust A                OK         22 degrees C / 71 degrees F
     FPC 8 Exhaust B                OK         28 degrees C / 82 degrees F
     FPC 8 LU 0 TSen                OK         20 degrees C / 68 degrees F
     FPC 8 LU 0 Chip                OK         33 degrees C / 91 degrees F
FPC 8 LU 1 TSen                OK         20 degrees C / 68 degrees F
     FPC 8 LU 1 Chip                OK         23 degrees C / 73 degrees F
     FPC 8 LU 2 TSen                OK         20 degrees C / 68 degrees F
     FPC 8 LU 2 Chip                OK         26 degrees C / 78 degrees F
     FPC 8 LU 3 TSen                OK         20 degrees C / 68 degrees F
     FPC 8 LU 3 Chip                OK         33 degrees C / 91 degrees F
     FPC 8 XM 0 TSen                OK         20 degrees C / 68 degrees F
     FPC 8 XM 0 Chip                OK         29 degrees C / 84 degrees F
     FPC 8 XF 0 TSen                OK         20 degrees C / 68 degrees F
     FPC 8 XF 0 Chip                OK         38 degrees C / 100 degrees F
     FPC 8 PLX Switch TSen          OK         20 degrees C / 68 degrees F
     FPC 8 PLX Switch Chip          OK         24 degrees C / 75 degrees F
     FPC 9 Intake                   OK         11 degrees C / 51 degrees F
     FPC 9 Exhaust A                OK         11 degrees C / 51 degrees F
     FPC 9 Exhaust B                OK         11 degrees C / 51 degrees F
     FPC 9 LU 0 TSen                OK         25 degrees C / 77 degrees F
     FPC 9 LU 0 Chip                OK         24 degrees C / 75 degrees F
     FPC 9 LU 1 TSen                OK         25 degrees C / 77 degrees F
     FPC 9 LU 1 Chip                OK         26 degrees C / 78 degrees F
     FPC 9 LU 2 TSen                OK         25 degrees C / 77 degrees F
     FPC 9 LU 2 Chip                OK         16 degrees C / 60 degrees F
     FPC 9 LU 3 TSen                OK         25 degrees C / 77 degrees F
     FPC 9 LU 3 Chip                OK         21 degrees C / 69 degrees F
     FPC 9 XM 0 TSen                OK         25 degrees C / 77 degrees F
     FPC 9 XM 0 Chip                OK         32 degrees C / 89 degrees F
     FPC 9 XM 1 TSen                OK         25 degrees C / 77 degrees F
```

```
      FPC 9 XM 1 Chip                OK         25 degrees C / 77 degrees F
      FPC 9 PLX Switch TSen          OK         25 degrees C / 77 degrees F
      FPC 9 PLX Switch Chip          OK         21 degrees C / 69 degrees F
      ADC 0 Intake                   OK         12 degrees C / 53 degrees F
      ADC 0 Exhaust                  OK         20 degrees C / 68 degrees F
      ADC 0 ADC-XF1                  OK         26 degrees C / 78 degrees F
      ADC 0 ADC-XF0                  OK         32 degrees C / 89 degrees F
      ADC 1 Intake                   OK         11 degrees C / 51 degrees F
      ADC 1 Exhaust                  OK         21 degrees C / 69 degrees F
      ADC 1 ADC-XF1                  OK         24 degrees C / 75 degrees F
      ADC 1 ADC-XF0                  OK         31 degrees C / 87 degrees F
      ADC 2 Intake                   OK         14 degrees C / 57 degrees F
      ADC 2 Exhaust                  OK         21 degrees C / 69 degrees F
      ADC 2 ADC-XF1                  OK         28 degrees C / 82 degrees F
      ADC 2 ADC-XF0                  OK         34 degrees C / 93 degrees F
      ADC 3 Intake                   OK         13 degrees C / 55 degrees F
      ADC 3 Exhaust                  OK         19 degrees C / 66 degrees F
      ADC 3 ADC-XF1                  OK         24 degrees C / 75 degrees F
      ADC 3 ADC-XF0                  OK         31 degrees C / 87 degrees F
      ADC 4 Intake                   OK         9 degrees C / 48 degrees F
      ADC 4 Exhaust                  OK         22 degrees C / 71 degrees F
      ADC 4 ADC-XF1                  OK         28 degrees C / 82 degrees F
      ADC 4 ADC-XF0                  OK         35 degrees C / 95 degrees F
      ADC 5 Intake                   OK         12 degrees C / 53 degrees F
      ADC 5 Exhaust                  OK         22 degrees C / 71 degrees F
      ADC 5 ADC-XF1                  OK         28 degrees C / 82 degrees F
      ADC 5 ADC-XF0                  OK         34 degrees C / 93 degrees F
      ADC 6 Intake                   OK         11 degrees C / 51 degrees F
      ADC 6 Exhaust                  OK         21 degrees C / 69 degrees F
      ADC 6 ADC-XF1                  OK         26 degrees C / 78 degrees F
 ADC 6 ADC-XF0                  OK         35 degrees C / 95 degrees F
      ADC 7 Intake                   OK         14 degrees C / 57 degrees F
      ADC 7 Exhaust                  OK         22 degrees C / 71 degrees F
      ADC 7 ADC-XF1                  OK         26 degrees C / 78 degrees F
      ADC 7 ADC-XF0                  OK         34 degrees C / 93 degrees F
      ADC 8 Intake                   OK         14 degrees C / 57 degrees F
      ADC 8 Exhaust                  OK         21 degrees C / 69 degrees F
      ADC 8 ADC-XF1                  OK         24 degrees C / 75 degrees F
      ADC 8 ADC-XF0                  OK         31 degrees C / 87 degrees F
      ADC 9 Intake                   OK         10 degrees C / 50 degrees F
      ADC 9 Exhaust                  OK         22 degrees C / 71 degrees F
      ADC 9 ADC-XF1                  OK         28 degrees C / 82 degrees F
      ADC 9 ADC-XF0                  OK         36 degrees C / 96 degrees F
Fans  Fan Tray 0 Fan 1               OK         3480 RPM
      Fan Tray 0 Fan 2               OK         3480 RPM
      Fan Tray 0 Fan 3               OK         3480 RPM
      Fan Tray 0 Fan 4               OK         3360 RPM
      Fan Tray 0 Fan 5               OK         3360 RPM
      Fan Tray 0 Fan 6               OK         3480 RPM
      Fan Tray 1 Fan 1               OK         3360 RPM
      Fan Tray 1 Fan 2               OK         3360 RPM
      Fan Tray 1 Fan 3               OK         3360 RPM
      Fan Tray 1 Fan 4               OK         3480 RPM
      Fan Tray 1 Fan 5               OK         3480 RPM
      Fan Tray 1 Fan 6               OK         3480 RPM
      Fan Tray 2 Fan 1               OK         3360 RPM
      Fan Tray 2 Fan 2               OK         3360 RPM
      Fan Tray 2 Fan 3               OK         3480 RPM
      Fan Tray 2 Fan 4               OK         3480 RPM
      Fan Tray 2 Fan 5               OK         3360 RPM
      Fan Tray 2 Fan 6               OK         3480 RPM
```

```
      Fan Tray 3 Fan 1                OK         3360 RPM
      Fan Tray 3 Fan 2                OK         3360 RPM
      Fan Tray 3 Fan 3                OK         3480 RPM
      Fan Tray 3 Fan 4                OK         3480 RPM
      Fan Tray 3 Fan 5                OK         3480 RPM
      Fan Tray 3 Fan 6                OK         3360 RPM
```

show chassis environment (MX2008 Router)

```
user@host>show chassis environment
Class Item                            Status     Measurement
Temp  PSM 0                           Absent
      PSM 1                           OK         29 degrees C / 84 degrees F
      PSM 2                           OK         30 degrees C / 86 degrees F
      PSM 3                           OK         29 degrees C / 84 degrees F
      PSM 4                           OK         29 degrees C / 84 degrees F
      PSM 5                           OK         30 degrees C / 86 degrees F
      PSM 6                           OK         29 degrees C / 84 degrees F
      PSM 7                           OK         31 degrees C / 87 degrees F
      PSM 8                           Absent
      PDM 0                           OK
      PDM 1                           OK
      CB 0 Inlet1                     OK         37 degrees C / 98 degrees F
      CB 0 Inlet2                     OK         45 degrees C / 113 degrees F
      CB 0 Inlet3                     OK         44 degrees C / 111 degrees F
      CB 0 Inlet4                     OK         41 degrees C / 105 degrees F
      CB 0 Exhaust1                   OK         30 degrees C / 86 degrees F
      CB 0 Exhaust2                   OK         40 degrees C / 104 degrees F
      CB 0 Exhaust3                   OK         48 degrees C / 118 degrees F
      CB 0 Exhaust4                   OK         46 degrees C / 114 degrees F
      CB 1 Inlet1                     OK         30 degrees C / 86 degrees F
      CB 1 Inlet2                     OK         31 degrees C / 87 degrees F
      CB 1 Inlet3                     OK         29 degrees C / 84 degrees F
      CB 1 Inlet4                     OK         32 degrees C / 89 degrees F
      CB 1 Exhaust1                   OK         30 degrees C / 86 degrees F
      CB 1 Exhaust2                   OK         33 degrees C / 91 degrees F
      CB 1 Exhaust3                   OK         34 degrees C / 93 degrees F
      CB 1 Exhaust4                   OK         34 degrees C / 93 degrees F
      Routing Engine 0                OK
      Routing Engine 0 CPU            OK         75 degrees C / 167 degrees F
      Routing Engine 1                OK
      Routing Engine 1 CPU            OK         46 degrees C / 114 degrees F
      SFB 0 Inlet2                    OK         44 degrees C / 111 degrees F
      SFB 0 Exhaust1                  OK         39 degrees C / 102 degrees F
      SFB 0 Inlet1                    OK         41 degrees C / 105 degrees F
      SFB 0 Exhaust2                  OK         45 degrees C / 113 degrees F
      SFB 0 SFB2-PF-local             OK         45 degrees C / 113 degrees F
      SFB 0 SFB2-PF-die               OK         51 degrees C / 123 degrees F
      SFB 1 Inlet2                    OK         30 degrees C / 86 degrees F
      SFB 1 Exhaust1                  OK         27 degrees C / 80 degrees F
      SFB 1 Inlet1                    OK         28 degrees C / 82 degrees F
      SFB 1 Exhaust2                  OK         31 degrees C / 87 degrees F
      SFB 1 SFB2-PF-local             OK         30 degrees C / 86 degrees F
      SFB 1 SFB2-PF-die               OK         37 degrees C / 98 degrees F
      SFB 2 Inlet2                    OK         28 degrees C / 82 degrees F
      SFB 2 Exhaust1                  OK         26 degrees C / 78 degrees F
      SFB 2 Inlet1                    OK         27 degrees C / 80 degrees F
      SFB 2 Exhaust2                  OK         28 degrees C / 82 degrees F
      SFB 2 SFB2-PF-local             OK         27 degrees C / 80 degrees F
      SFB 2 SFB2-PF-die               OK         33 degrees C / 91 degrees F
      SFB 3 Inlet2                    OK         28 degrees C / 82 degrees F
```

```
SFB 3 Exhaust1                OK          26 degrees C / 78 degrees F
SFB 3 Inlet1                  OK          26 degrees C / 78 degrees F
SFB 3 Exhaust2                OK          28 degrees C / 82 degrees F
SFB 3 SFB2-PF-local           OK          27 degrees C / 80 degrees F
SFB 3 SFB2-PF-die             OK          33 degrees C / 91 degrees F
SFB 4 Inlet2                  OK          28 degrees C / 82 degrees F
SFB 4 Exhaust1                OK          26 degrees C / 78 degrees F
SFB 4 Inlet1                  OK          26 degrees C / 78 degrees F
SFB 4 Exhaust2                OK          28 degrees C / 82 degrees F
SFB 4 SFB2-PF-local           OK          27 degrees C / 80 degrees F
SFB 4 SFB2-PF-die             OK          32 degrees C / 89 degrees F
SFB 5 Inlet2                  OK          29 degrees C / 84 degrees F
SFB 5 Exhaust1                OK          27 degrees C / 80 degrees F
SFB 5 Inlet1                  OK          28 degrees C / 82 degrees F
SFB 5 Exhaust2                OK          29 degrees C / 84 degrees F
SFB 5 SFB2-PF-local           OK          28 degrees C / 82 degrees F
SFB 5 SFB2-PF-die             OK          34 degrees C / 93 degrees F
SFB 6 Inlet2                  OK          33 degrees C / 91 degrees F
SFB 6 Exhaust1                OK          32 degrees C / 89 degrees F
SFB 6 Inlet1                  OK          32 degrees C / 89 degrees F
SFB 6 Exhaust2                OK          34 degrees C / 93 degrees F
SFB 6 SFB2-PF-local           OK          33 degrees C / 91 degrees F
SFB 6 SFB2-PF-die             OK          40 degrees C / 104 degrees F
SFB 7 Inlet2                  OK          29 degrees C / 84 degrees F
SFB 7 Exhaust1                OK          28 degrees C / 82 degrees F
SFB 7 Inlet1                  OK          29 degrees C / 84 degrees F
SFB 7 Exhaust2                OK          29 degrees C / 84 degrees F
SFB 7 SFB2-PF-local           OK          28 degrees C / 82 degrees F
SFB 7 SFB2-PF-die             OK          33 degrees C / 91 degrees F
FPC 0 Intake                  OK          29 degrees C / 84 degrees F
FPC 0 Exhaust A               OK          42 degrees C / 107 degrees F
FPC 0 Exhaust B               OK          42 degrees C / 107 degrees F
FPC 0 XL 0 TSen               OK          38 degrees C / 100 degrees F
FPC 0 XL 0 Chip               OK          53 degrees C / 127 degrees F
FPC 0 XL 0 XR2 0 TSen         OK          38 degrees C / 100 degrees F
FPC 0 XL 0 XR2 0 Chip         OK          59 degrees C / 138 degrees F
FPC 0 XL 0 XR2 1 TSen         OK          38 degrees C / 100 degrees F
FPC 0 XL 0 XR2 1 Chip         OK          59 degrees C / 138 degrees F
FPC 0 XL 1 TSen               OK          30 degrees C / 86 degrees F
FPC 0 XL 1 Chip               OK          42 degrees C / 107 degrees F
FPC 0 XL 1 XR2 0 TSen         OK          30 degrees C / 86 degrees F
FPC 0 XL 1 XR2 0 Chip         OK          49 degrees C / 120 degrees F
FPC 0 XL 1 XR2 1 TSen         OK          30 degrees C / 86 degrees F
FPC 0 XL 1 XR2 1 Chip         OK          50 degrees C / 122 degrees F
FPC 0 XM 0 TSen               OK          42 degrees C / 107 degrees F
FPC 0 XM 0 Chip               OK          49 degrees C / 120 degrees F
FPC 0 XM 1 TSen               OK          42 degrees C / 107 degrees F
FPC 0 XM 1 Chip               OK          42 degrees C / 107 degrees F
FPC 0 XM 2 TSen               OK          42 degrees C / 107 degrees F
FPC 0 XM 2 Chip               OK          42 degrees C / 107 degrees F
FPC 0 XM 3 TSen               OK          42 degrees C / 107 degrees F
FPC 0 XM 3 Chip               OK          40 degrees C / 104 degrees F
FPC 0 PCIe Switch TSen        OK          42 degrees C / 107 degrees F
FPC 0 PCIe Switch Chip        OK          22 degrees C / 71 degrees F
FPC 1 Intake                  OK          29 degrees C / 84 degrees F
FPC 1 Exhaust A               OK          52 degrees C / 125 degrees F
FPC 1 Exhaust B               OK          44 degrees C / 111 degrees F
FPC 1 EA0 TSen                OK          54 degrees C / 129 degrees F
FPC 1 EA0 Chip                OK          47 degrees C / 116 degrees F
FPC 1 EA0_XR0 TSen            OK          54 degrees C / 129 degrees F
FPC 1 EA0_XR0 Chip            OK          56 degrees C / 132 degrees F
```

```
FPC 1 EA0_XR1 TSen            OK        54 degrees C / 129 degrees F
FPC 1 EA0_XR1 Chip            OK        53 degrees C / 127 degrees F
FPC 1 EA1 TSen                OK        54 degrees C / 129 degrees F
FPC 1 EA1 Chip                OK        49 degrees C / 120 degrees F
FPC 1 EA1_XR0 TSen            OK        54 degrees C / 129 degrees F
FPC 1 EA1_XR0 Chip            OK        57 degrees C / 134 degrees F
FPC 1 EA1_XR1 TSen            OK        54 degrees C / 129 degrees F
FPC 1 EA1_XR1 Chip            OK        58 degrees C / 136 degrees F
FPC 1 PEX TSen                OK        54 degrees C / 129 degrees F
FPC 1 PEX Chip                OK        39 degrees C / 102 degrees F
FPC 1 EA2 TSen                OK        43 degrees C / 109 degrees F
FPC 1 EA2 Chip                OK        39 degrees C / 102 degrees F
FPC 1 EA2_XR0 TSen            OK        43 degrees C / 109 degrees F
FPC 1 EA2_XR0 Chip            OK        45 degrees C / 113 degrees F
FPC 1 EA2_XR1 TSen            OK        43 degrees C / 109 degrees F
FPC 1 EA2_XR1 Chip            OK        42 degrees C / 107 degrees F
FPC 1 EA3 TSen                OK        43 degrees C / 109 degrees F
FPC 1 EA3 Chip                OK        40 degrees C / 104 degrees F
FPC 1 EA3_XR0 TSen            OK        43 degrees C / 109 degrees F
FPC 1 EA3_XR0 Chip            OK        50 degrees C / 122 degrees F
FPC 1 EA3_XR1 TSen            OK        43 degrees C / 109 degrees F
FPC 1 EA3_XR1 Chip            OK        46 degrees C / 114 degrees F
FPC 1 EA0_HMC0 Logic die      OK        60 degrees C / 140 degrees F
FPC 1 EA0_HMC0 DRAM botm      OK        57 degrees C / 134 degrees F
FPC 1 EA0_HMC1 Logic die      OK        61 degrees C / 141 degrees F
FPC 1 EA0_HMC1 DRAM botm      OK        58 degrees C / 136 degrees F
FPC 1 EA0_HMC2 Logic die      OK        57 degrees C / 134 degrees F
FPC 1 EA0_HMC2 DRAM botm      OK        54 degrees C / 129 degrees F
FPC 1 EA1_HMC0 Logic die      OK        65 degrees C / 149 degrees F
FPC 1 EA1_HMC0 DRAM botm      OK        62 degrees C / 143 degrees F
FPC 1 EA1_HMC1 Logic die      OK        64 degrees C / 147 degrees F
FPC 1 EA1_HMC1 DRAM botm      OK        61 degrees C / 141 degrees F
FPC 1 EA1_HMC2 Logic die      OK        61 degrees C / 141 degrees F
FPC 1 EA1_HMC2 DRAM botm      OK        58 degrees C / 136 degrees F
FPC 1 EA2_HMC0 Logic die      OK        50 degrees C / 122 degrees F
FPC 1 EA2_HMC0 DRAM botm      OK        47 degrees C / 116 degrees F
FPC 1 EA2_HMC1 Logic die      OK        54 degrees C / 129 degrees F
FPC 1 EA2_HMC1 DRAM botm      OK        51 degrees C / 123 degrees F
FPC 1 EA2_HMC2 Logic die      OK        51 degrees C / 123 degrees F
FPC 1 EA2_HMC2 DRAM botm      OK        48 degrees C / 118 degrees F
FPC 1 EA3_HMC0 Logic die      OK        51 degrees C / 123 degrees F
FPC 1 EA3_HMC0 DRAM botm      OK        48 degrees C / 118 degrees F
FPC 1 EA3_HMC1 Logic die      OK        51 degrees C / 123 degrees F
FPC 1 EA3_HMC1 DRAM botm      OK        48 degrees C / 118 degrees F
FPC 1 EA3_HMC2 Logic die      OK        51 degrees C / 123 degrees F
FPC 1 EA3_HMC2 DRAM botm      OK        48 degrees C / 118 degrees F
FPC 7 Intake                  OK        30 degrees C / 86 degrees F
FPC 7 Exhaust A               OK        45 degrees C / 113 degrees F
FPC 7 Exhaust B               OK        38 degrees C / 100 degrees F
FPC 7 QX 0 TSen               OK        48 degrees C / 118 degrees F
FPC 7 QX 0 Chip               OK        51 degrees C / 123 degrees F
FPC 7 LU 0 TCAM TSen          OK        48 degrees C / 118 degrees F
FPC 7 LU 0 TCAM Chip          OK        51 degrees C / 123 degrees F
FPC 7 LU 0 TSen               OK        48 degrees C / 118 degrees F
FPC 7 LU 0 Chip               OK        50 degrees C / 122 degrees F
FPC 7 MQ 0 TSen               OK        48 degrees C / 118 degrees F
FPC 7 MQ 0 Chip               OK        54 degrees C / 129 degrees F
FPC 7 QX 1 TSen               OK        41 degrees C / 105 degrees F
FPC 7 QX 1 Chip               OK        42 degrees C / 107 degrees F
FPC 7 LU 1 TCAM TSen          OK        41 degrees C / 105 degrees F
FPC 7 LU 1 TCAM Chip          OK        43 degrees C / 109 degrees F
```

```
      FPC 7 LU 1 TSen              OK        41 degrees C / 105 degrees F
      FPC 7 LU 1 Chip              OK        46 degrees C / 114 degrees F
      FPC 7 MQ 1 TSen              OK        41 degrees C / 105 degrees F
      FPC 7 MQ 1 Chip              OK        47 degrees C / 116 degrees F
      ADC 7 Intake                 OK        32 degrees C / 89 degrees F
      ADC 7 Exhaust                OK        39 degrees C / 102 degrees F
      ADC 7 ADC-XF1                OK        46 degrees C / 114 degrees F
      ADC 7 ADC-XF0                OK        54 degrees C / 129 degrees F
Fans  Fan Tray 0 Fan 1             OK        6240 RPM
      Fan Tray 0 Fan 2             OK        6120 RPM
      Fan Tray 0 Fan 3             OK        6120 RPM
      Fan Tray 0 Fan 4             OK        5760 RPM
      Fan Tray 0 Fan 5             OK        5880 RPM
      Fan Tray 0 Fan 6             OK        6000 RPM
      Fan Tray 1 Fan 1             OK        5880 RPM
      Fan Tray 1 Fan 2             OK        5880 RPM
      Fan Tray 1 Fan 3             OK        6000 RPM
      Fan Tray 1 Fan 4             OK        6000 RPM
      Fan Tray 1 Fan 5             OK        6000 RPM
      Fan Tray 1 Fan 6             OK        6000 RPM
```

show chassis environment (T320 Router)

```
user@host> show chassis environment
Class Item                  Status     Measurement
Power PEM 0                 OK
      PEM 1                 Absent
Temp  SCG 0                 OK         28 degrees C / 82 degrees F
      SCG 1                 OK         28 degrees C / 82 degrees F
      Routing Engine 0      OK         31 degrees C / 87 degrees F
      Routing Engine 1      OK         30 degrees C / 86 degrees F
      CB 0                  OK         32 degrees C / 89 degrees F
      CB 1                  OK         32 degrees C / 89 degrees F
      SIB 0                 OK         33 degrees C / 91 degrees F
      SIB 1                 OK         33 degrees C / 91 degrees F
      SIB 2                 OK         34 degrees C / 93 degrees F
      FPC 0 Top             OK         38 degrees C / 100 degrees F
      FPC 0 Bottom          OK         32 degrees C / 89 degrees F
      FPC 1 Top             OK         38 degrees C / 100 degrees F
      FPC 1 Bottom          OK         33 degrees C / 91 degrees F
      FPC 2 Top             OK         36 degrees C / 96 degrees F
      FPC 2 Bottom          OK         31 degrees C / 87 degrees F
      FPM GBUS              OK         26 degrees C / 78 degrees F
      FPM Display           OK         29 degrees C / 84 degrees F
Fans  Top Left Front fan    OK         Spinning at normal speed
      Top Left Middle fan   OK         Spinning at normal speed
      Top Left Rear fan     OK         Spinning at normal speed
      Top Right Front fan   OK         Spinning at normal speed
      Top Right Middle fan  OK         Spinning at normal speed
      Top Right Rear fan    OK         Spinning at normal speed
      Bottom Left Front fan OK         Spinning at normal speed
      Bottom Left Middle fan OK        Spinning at normal speed
      Bottom Left Rear fan  OK         Spinning at normal speed
      Bottom Right Front fan OK        Spinning at normal speed
      Bottom Right Middle fan OK       Spinning at normal speed
      Bottom Right Rear fan OK         Spinning at normal speed
      Rear Tray Top fan     OK         Spinning at normal speed
      Rear Tray Second fan  OK         Spinning at normal speed
      Rear Tray Middle fan  OK         Spinning at normal speed
      Rear Tray Fourth fan  OK         Spinning at normal speed
      Rear Tray Bottom fan  OK         Spinning at normal speed
```

```
Misc  CIP                    OK
      SPMB 0                 OK
      SPMB 1                 OK
```

show chassis environment (MX10003 Router)

```
user@host> show chassis environment

Class Item                          Status     Measurement
Temp  CB 0 Exhaust Temp Sensor 0x49 OK         36 degrees C / 96 degrees F
      CB 0 Inlet Temp Sensor 0x49   OK         29 degrees C / 84 degrees F
      CB 1 Exhaust Temp Sensor 0x49 OK         36 degrees C / 96 degrees F
      CB 1 Inlet Temp Sensor 0x49   OK         31 degrees C / 87 degrees F
      FPC 0 Intake Temp Sensor      OK         29 degrees C / 84 degrees F
      FPC 0 Exhaust-A Temp Sensor   OK         55 degrees C / 131 degrees F
      FPC 0 Exhaust-B Temp Sensor   OK         44 degrees C / 111 degrees F
      FPC 0 EA0 Chip                OK         58 degrees C / 136 degrees F
      FPC 0 EA0-XR0 Chip            OK         61 degrees C / 141 degrees F
      FPC 0 EA0-XR1 Chip            OK         62 degrees C / 143 degrees F
      FPC 0 EA1 Chip                OK         67 degrees C / 152 degrees F
      FPC 0 EA1-XR0 Chip            OK         71 degrees C / 159 degrees F
      FPC 0 EA1-XR1 Chip            OK         72 degrees C / 161 degrees F
      FPC 0 PEX Chip                OK         75 degrees C / 167 degrees F
      FPC 0 EA2 Chip                OK         49 degrees C / 120 degrees F
      FPC 0 EA2-XR0 Chip            OK         55 degrees C / 131 degrees F
      FPC 0 EA2-XR1 Chip            OK         56 degrees C / 132 degrees F
      FPC 0 PF Chip                 OK         68 degrees C / 154 degrees F
      FPC 0 EA0_HMC0 Logic die      OK         72 degrees C / 161 degrees F
      FPC 0 EA0_HMC0 DRAM botm      OK         69 degrees C / 156 degrees F
      FPC 0 EA0_HMC1 Logic die      OK         72 degrees C / 161 degrees F
      FPC 0 EA0_HMC1 DRAM botm      OK         69 degrees C / 156 degrees F
      FPC 0 EA0_HMC2 Logic die      OK         75 degrees C / 167 degrees F
      FPC 0 EA0_HMC2 DRAM botm      OK         72 degrees C / 161 degrees F
      FPC 0 EA1_HMC0 Logic die      OK         81 degrees C / 177 degrees F
      FPC 0 EA1_HMC0 DRAM botm      OK         78 degrees C / 172 degrees F
      FPC 0 EA1_HMC1 Logic die      OK         79 degrees C / 174 degrees F
      FPC 0 EA1_HMC1 DRAM botm      OK         76 degrees C / 168 degrees F
      FPC 0 EA1_HMC2 Logic die      OK         82 degrees C / 179 degrees F
      FPC 0 EA1_HMC2 DRAM botm      OK         79 degrees C / 174 degrees F
      FPC 0 EA2_HMC0 Logic die      OK         61 degrees C / 141 degrees F
      FPC 0 EA2_HMC0 DRAM botm      OK         58 degrees C / 136 degrees F
      FPC 0 EA2_HMC1 Logic die      OK         62 degrees C / 143 degrees F
      FPC 0 EA2_HMC1 DRAM botm      OK         59 degrees C / 138 degrees F
      FPC 0 EA2_HMC2 Logic die      OK         64 degrees C / 147 degrees F
      FPC 0 EA2_HMC2 DRAM botm      OK         61 degrees C / 141 degrees F
      FPC 1 Intake Temp Sensor      OK         28 degrees C / 82 degrees F
      FPC 1 Exhaust-A Temp Sensor   OK         58 degrees C / 136 degrees F
      FPC 1 Exhaust-B Temp Sensor   OK         46 degrees C / 114 degrees F
      FPC 1 EA0 Chip                OK         64 degrees C / 147 degrees F
      FPC 1 EA0-XR0 Chip            OK         67 degrees C / 152 degrees F
      FPC 1 EA0-XR1 Chip            OK         68 degrees C / 154 degrees F
      FPC 1 EA1 Chip                OK         70 degrees C / 158 degrees F
      FPC 1 EA1-XR0 Chip            OK         74 degrees C / 165 degrees F
      FPC 1 EA1-XR1 Chip            OK         74 degrees C / 165 degrees F
      FPC 1 PEX Chip                OK         88 degrees C / 190 degrees F
      FPC 1 EA2 Chip                OK         50 degrees C / 122 degrees F
      FPC 1 EA2-XR0 Chip            OK         54 degrees C / 129 degrees F
      FPC 1 EA2-XR1 Chip            OK         56 degrees C / 132 degrees F
      FPC 1 PF Chip                 OK         71 degrees C / 159 degrees F
      FPC 1 EA0_HMC0 Logic die      OK         74 degrees C / 165 degrees F
```

```
      FPC 1 EA0_HMC0 DRAM botm       OK         71 degrees C / 159 degrees F
      FPC 1 EA0_HMC1 Logic die       OK         78 degrees C / 172 degrees F
      FPC 1 EA0_HMC1 DRAM botm       OK         75 degrees C / 167 degrees F
      FPC 1 EA0_HMC2 Logic die       OK         78 degrees C / 172 degrees F
      FPC 1 EA0_HMC2 DRAM botm       OK         75 degrees C / 167 degrees F
      FPC 1 EA1_HMC0 Logic die       OK         84 degrees C / 183 degrees F
      FPC 1 EA1_HMC0 DRAM botm       OK         81 degrees C / 177 degrees F
      FPC 1 EA1_HMC1 Logic die       OK         81 degrees C / 177 degrees F
      FPC 1 EA1_HMC1 DRAM botm       OK         78 degrees C / 172 degrees F
      FPC 1 EA1_HMC2 Logic die       OK         85 degrees C / 185 degrees F
      FPC 1 EA1_HMC2 DRAM botm       OK         82 degrees C / 179 degrees F
      FPC 1 EA2_HMC0 Logic die       OK         63 degrees C / 145 degrees F
      FPC 1 EA2_HMC0 DRAM botm       OK         60 degrees C / 140 degrees F
      FPC 1 EA2_HMC1 Logic die       OK         60 degrees C / 140 degrees F
      FPC 1 EA2_HMC1 DRAM botm       OK         57 degrees C / 134 degrees F
      FPC 1 EA2_HMC2 Logic die       OK         66 degrees C / 150 degrees F
      FPC 1 EA2_HMC2 DRAM botm       OK         63 degrees C / 145 degrees F
Power PEM 0                          OK
      PEM 1                          OK
      PEM 2                          OK
      PEM 3                          OK
      PEM 4                          Absent
      PEM 5                          Absent
Fans  Fan Tray 0 Fan 0               OK         Spinning at normal speed
      Fan Tray 0 Fan 1               OK         Spinning at normal speed
      Fan Tray 0 Fan 2               OK         Spinning at normal speed
      Fan Tray 0 Fan 3               OK         Spinning at normal speed
      Fan Tray 1 Fan 0               OK         Spinning at normal speed
      Fan Tray 1 Fan 1               OK         Spinning at normal speed
      Fan Tray 1 Fan 2               OK         Spinning at normal speed
      Fan Tray 1 Fan 3               OK         Spinning at normal speed
      Fan Tray 2 Fan 0               OK         Spinning at normal speed
      Fan Tray 2 Fan 1               OK         Spinning at normal speed
      Fan Tray 2 Fan 2               OK         Spinning at normal speed
      Fan Tray 2 Fan 3               OK         Spinning at normal speed
      Fan Tray 3 Fan 0               OK         Spinning at normal speed
      Fan Tray 3 Fan 1               OK         Spinning at normal speed
      Fan Tray 3 Fan 2               OK         Spinning at normal speed
      Fan Tray 3 Fan 3               OK         Spinning at normal speed
```

show chassis environment (MX10008 Router)

```
user@host> show chassis environment
Class Item                           Status     Measurement
      Routing Engine 0 CPU           OK         41 degrees C / 105 degrees F
      Routing Engine 1 CPU           OK         40 degrees C / 104 degrees F
Temp  CB 0 Intake A Temp Sensor      OK         24 degrees C / 75 degrees F
      CB 0 Intake B Temp Sensor      OK         24 degrees C / 75 degrees F
      CB 0 Exhaust A Temp Sensor     OK         28 degrees C / 82 degrees F
      CB 0 Exhaust B Temp Sensor     OK         30 degrees C / 86 degrees F
      CB 0 Middle Temp Sensor        OK         28 degrees C / 82 degrees F
      CB 1 Intake A Temp Sensor      OK         24 degrees C / 75 degrees F
      CB 1 Intake B Temp Sensor      OK         23 degrees C / 73 degrees F
      CB 1 Exhaust A Temp Sensor     OK         27 degrees C / 80 degrees F
      CB 1 Exhaust B Temp Sensor     OK         29 degrees C / 84 degrees F
      CB 1 Middle Temp Sensor        OK         28 degrees C / 82 degrees F
      FPC 0 Intake-A Temp Sensor     OK         32 degrees C / 89 degrees F
      FPC 0 Exhaust-A Temp Sensor    OK         44 degrees C / 111 degrees F
      FPC 0 Exhaust-B Temp Sensor    OK         49 degrees C / 120 degrees F
      FPC 0 EA0 Temp Sensor          OK         66 degrees C / 150 degrees F
      FPC 0 EA0_XR0 Temp Sensor      OK         69 degrees C / 156 degrees F
```

```
FPC 0 EA0_XR1 Temp Sensor      OK         73 degrees C / 163 degrees F
FPC 0 EA1 Temp Sensor          OK         60 degrees C / 140 degrees F
FPC 0 EA1_XR0 Temp Sensor      OK         64 degrees C / 147 degrees F
FPC 0 EA1_XR1 Temp Sensor      OK         63 degrees C / 145 degrees F
FPC 0 EA2 Temp Sensor          OK         68 degrees C / 154 degrees F
FPC 0 EA2_XR0 Temp Sensor      OK         73 degrees C / 163 degrees F
FPC 0 EA2_XR1 Temp Sensor      OK         72 degrees C / 161 degrees F
FPC 0 EA3 Temp Sensor          OK         63 degrees C / 145 degrees F
FPC 0 EA3_XR0 Temp Sensor      OK         66 degrees C / 150 degrees F
FPC 0 EA3_XR1 Temp Sensor      OK         65 degrees C / 149 degrees F
FPC 0 EA4 Temp Sensor          OK         68 degrees C / 154 degrees F
FPC 0 EA4_XR0 Temp Sensor      OK         71 degrees C / 159 degrees F
FPC 0 EA4_XR1 Temp Sensor      OK         70 degrees C / 158 degrees F
FPC 0 EA5 Temp Sensor          OK         56 degrees C / 132 degrees F
FPC 0 EA5_XR0 Temp Sensor      OK         61 degrees C / 141 degrees F
FPC 0 EA5_XR1 Temp Sensor      OK         63 degrees C / 145 degrees F
FPC 0 EA0_HMC0 Logic die       OK         75 degrees C / 167 degrees F
FPC 0 EA0_HMC0 DRAM botm       OK         72 degrees C / 161 degrees F
FPC 0 EA0_HMC1 Logic die       OK         75 degrees C / 167 degrees F
FPC 0 EA0_HMC1 DRAM botm       OK         72 degrees C / 161 degrees F
FPC 0 EA0_HMC2 Logic die       OK         77 degrees C / 170 degrees F
FPC 0 EA0_HMC2 DRAM botm       OK         74 degrees C / 165 degrees F
FPC 0 EA1_HMC0 Logic die       OK         72 degrees C / 161 degrees F
FPC 0 EA1_HMC0 DRAM botm       OK         69 degrees C / 156 degrees F
FPC 0 EA1_HMC1 Logic die       OK         73 degrees C / 163 degrees F
FPC 0 EA1_HMC1 DRAM botm       OK         70 degrees C / 158 degrees F
FPC 0 EA1_HMC2 Logic die       OK         72 degrees C / 161 degrees F
FPC 0 EA1_HMC2 DRAM botm       OK         69 degrees C / 156 degrees F
FPC 0 EA2_HMC0 Logic die       OK         80 degrees C / 176 degrees F
FPC 0 EA2_HMC0 DRAM botm       OK         77 degrees C / 170 degrees F
FPC 0 EA2_HMC1 Logic die       OK         80 degrees C / 176 degrees F
FPC 0 EA2_HMC1 DRAM botm       OK         77 degrees C / 170 degrees F
FPC 0 EA2_HMC2 Logic die       OK         79 degrees C / 174 degrees F
FPC 0 EA2_HMC2 DRAM botm       OK         76 degrees C / 168 degrees F
FPC 0 EA3_HMC0 Logic die       OK         77 degrees C / 170 degrees F
FPC 0 EA3_HMC0 DRAM botm       OK         74 degrees C / 165 degrees F
FPC 0 EA3_HMC1 Logic die       OK         78 degrees C / 172 degrees F
FPC 0 EA3_HMC1 DRAM botm       OK         75 degrees C / 167 degrees F
FPC 0 EA3_HMC2 Logic die       OK         77 degrees C / 170 degrees F
FPC 0 EA3_HMC2 DRAM botm       OK         74 degrees C / 165 degrees F
FPC 0 EA4_HMC0 Logic die       OK         80 degrees C / 176 degrees F
FPC 0 EA4_HMC0 DRAM botm       OK         77 degrees C / 170 degrees F
FPC 0 EA4_HMC1 Logic die       OK         81 degrees C / 177 degrees F
FPC 0 EA4_HMC1 DRAM botm       OK         78 degrees C / 172 degrees F
FPC 0 EA4_HMC2 Logic die       OK         80 degrees C / 176 degrees F
FPC 0 EA4_HMC2 DRAM botm       OK         77 degrees C / 170 degrees F
FPC 0 EA5_HMC0 Logic die       OK         68 degrees C / 154 degrees F
FPC 0 EA5_HMC0 DRAM botm       OK         65 degrees C / 149 degrees F
FPC 0 EA5_HMC1 Logic die       OK         68 degrees C / 154 degrees F
FPC 0 EA5_HMC1 DRAM botm       OK         65 degrees C / 149 degrees F
FPC 0 EA5_HMC2 Logic die       OK         67 degrees C / 152 degrees F
FPC 0 EA5_HMC2 DRAM botm       OK         64 degrees C / 147 degrees F
FPC 2 Intake-A Temp Sensor     OK         32 degrees C / 89 degrees F
FPC 2 Exhaust-A Temp Sensor    OK         52 degrees C / 125 degrees F
FPC 2 Exhaust-B Temp Sensor    OK         50 degrees C / 122 degrees F
FPC 2 EA0 Temp Sensor          OK         71 degrees C / 159 degrees F
FPC 2 EA0_XR0 Temp Sensor      OK         75 degrees C / 167 degrees F
FPC 2 EA0_XR1 Temp Sensor      OK         78 degrees C / 172 degrees F
FPC 2 EA1 Temp Sensor          OK         64 degrees C / 147 degrees F
FPC 2 EA1_XR0 Temp Sensor      OK         67 degrees C / 152 degrees F
FPC 2 EA1_XR1 Temp Sensor      OK         65 degrees C / 149 degrees F
```

```
FPC 2 EA2 Temp Sensor          OK         75 degrees C / 167 degrees F
FPC 2 EA2_XR0 Temp Sensor      OK         80 degrees C / 176 degrees F
FPC 2 EA2_XR1 Temp Sensor      OK         80 degrees C / 176 degrees F
FPC 2 EA3 Temp Sensor          OK         66 degrees C / 150 degrees F
FPC 2 EA3_XR0 Temp Sensor      OK         69 degrees C / 156 degrees F
FPC 2 EA3_XR1 Temp Sensor      OK         69 degrees C / 156 degrees F
FPC 2 EA4 Temp Sensor          OK         75 degrees C / 167 degrees F
FPC 2 EA4_XR0 Temp Sensor      OK         76 degrees C / 168 degrees F
FPC 2 EA4_XR1 Temp Sensor      OK         75 degrees C / 167 degrees F
FPC 2 EA5 Temp Sensor          OK         60 degrees C / 140 degrees F
FPC 2 EA5_XR0 Temp Sensor      OK         64 degrees C / 147 degrees F
FPC 2 EA5_XR1 Temp Sensor      OK         64 degrees C / 147 degrees F
FPC 2 EA0_HMC0 Logic die       OK         84 degrees C / 183 degrees F
FPC 2 EA0_HMC0 DRAM botm       OK         81 degrees C / 177 degrees F
FPC 2 EA0_HMC1 Logic die       OK         85 degrees C / 185 degrees F
FPC 2 EA0_HMC1 DRAM botm       OK         82 degrees C / 179 degrees F
FPC 2 EA0_HMC2 Logic die       OK         83 degrees C / 181 degrees F
FPC 2 EA0_HMC2 DRAM botm       OK         80 degrees C / 176 degrees F
FPC 2 EA1_HMC0 Logic die       OK         76 degrees C / 168 degrees F
FPC 2 EA1_HMC0 DRAM botm       OK         73 degrees C / 163 degrees F
FPC 2 EA1_HMC1 Logic die       OK         76 degrees C / 168 degrees F
FPC 2 EA1_HMC1 DRAM botm       OK         73 degrees C / 163 degrees F
FPC 2 EA1_HMC2 Logic die       OK         76 degrees C / 168 degrees F
FPC 2 EA1_HMC2 DRAM botm       OK         73 degrees C / 163 degrees F
FPC 2 EA2_HMC0 Logic die       OK         86 degrees C / 186 degrees F
FPC 2 EA2_HMC0 DRAM botm       OK         83 degrees C / 181 degrees F
FPC 2 EA2_HMC1 Logic die       OK         87 degrees C / 188 degrees F
FPC 2 EA2_HMC1 DRAM botm       OK         84 degrees C / 183 degrees F
FPC 2 EA2_HMC2 Logic die       OK         87 degrees C / 188 degrees F
FPC 2 EA2_HMC2 DRAM botm       OK         84 degrees C / 183 degrees F
FPC 2 EA3_HMC0 Logic die       OK         80 degrees C / 176 degrees F
FPC 2 EA3_HMC0 DRAM botm       OK         77 degrees C / 170 degrees F
FPC 2 EA3_HMC1 Logic die       OK         80 degrees C / 176 degrees F
FPC 2 EA3_HMC1 DRAM botm       OK         77 degrees C / 170 degrees F
FPC 2 EA3_HMC2 Logic die       OK         80 degrees C / 176 degrees F
FPC 2 EA3_HMC2 DRAM botm       OK         77 degrees C / 170 degrees F
FPC 2 EA4_HMC0 Logic die       OK         88 degrees C / 190 degrees F
FPC 2 EA4_HMC0 DRAM botm       OK         85 degrees C / 185 degrees F
FPC 2 EA4_HMC1 Logic die       OK         89 degrees C / 192 degrees F
FPC 2 EA4_HMC1 DRAM botm       OK         86 degrees C / 186 degrees F
FPC 2 EA4_HMC2 Logic die       OK         80 degrees C / 176 degrees F
FPC 2 EA4_HMC2 DRAM botm       OK         77 degrees C / 170 degrees F
FPC 2 EA5_HMC0 Logic die       OK         72 degrees C / 161 degrees F
FPC 2 EA5_HMC0 DRAM botm       OK         69 degrees C / 156 degrees F
FPC 2 EA5_HMC1 Logic die       OK         69 degrees C / 156 degrees F
FPC 2 EA5_HMC1 DRAM botm       OK         66 degrees C / 150 degrees F
FPC 2 EA5_HMC2 Logic die       OK         72 degrees C / 161 degrees F
FPC 2 EA5_HMC2 DRAM botm       OK         69 degrees C / 156 degrees F
FPC 3 Intake-A Temp Sensor     OK         30 degrees C / 86 degrees F
FPC 3 Exhaust-A Temp Sensor    OK         48 degrees C / 118 degrees F
FPC 3 Exhaust-B Temp Sensor    OK         44 degrees C / 111 degrees F
FPC 3 EA0 Temp Sensor          OK         60 degrees C / 140 degrees F
FPC 3 EA0_XR0 Temp Sensor      OK         65 degrees C / 149 degrees F
FPC 3 EA0_XR1 Temp Sensor      OK         67 degrees C / 152 degrees F
FPC 3 EA1 Temp Sensor          OK         54 degrees C / 129 degrees F
FPC 3 EA1_XR0 Temp Sensor      OK         59 degrees C / 138 degrees F
FPC 3 EA1_XR1 Temp Sensor      OK         58 degrees C / 136 degrees F
FPC 3 EA2 Temp Sensor          OK         62 degrees C / 143 degrees F
FPC 3 EA2_XR0 Temp Sensor      OK         66 degrees C / 150 degrees F
FPC 3 EA2_XR1 Temp Sensor      OK         66 degrees C / 150 degrees F
FPC 3 EA3 Temp Sensor          OK         54 degrees C / 129 degrees F
```

```
      FPC 3 EA3_XR0 Temp Sensor      OK         57 degrees C / 134 degrees F
      FPC 3 EA3_XR1 Temp Sensor      OK         56 degrees C / 132 degrees F
      FPC 3 EA4 Temp Sensor          OK         68 degrees C / 154 degrees F
      FPC 3 EA4_XR0 Temp Sensor      OK         71 degrees C / 159 degrees F
      FPC 3 EA4_XR1 Temp Sensor      OK         70 degrees C / 158 degrees F
      FPC 3 EA5 Temp Sensor          OK         55 degrees C / 131 degrees F
      FPC 3 EA5_XR0 Temp Sensor      OK         58 degrees C / 136 degrees F
      FPC 3 EA5_XR1 Temp Sensor      OK         58 degrees C / 136 degrees F
      FPC 3 EA0_HMC0 Logic die       OK         69 degrees C / 156 degrees F
      FPC 3 EA0_HMC0 DRAM botm       OK         66 degrees C / 150 degrees F
      FPC 3 EA0_HMC1 Logic die       OK         70 degrees C / 158 degrees F
      FPC 3 EA0_HMC1 DRAM botm       OK         67 degrees C / 152 degrees F
      FPC 3 EA0_HMC2 Logic die       OK         69 degrees C / 156 degrees F
      FPC 3 EA0_HMC2 DRAM botm       OK         66 degrees C / 150 degrees F
      FPC 3 EA1_HMC0 Logic die       OK         67 degrees C / 152 degrees F
      FPC 3 EA1_HMC0 DRAM botm       OK         64 degrees C / 147 degrees F
      FPC 3 EA1_HMC1 Logic die       OK         64 degrees C / 147 degrees F
      FPC 3 EA1_HMC1 DRAM botm       OK         61 degrees C / 141 degrees F
      FPC 3 EA1_HMC2 Logic die       OK         64 degrees C / 147 degrees F
      FPC 3 EA1_HMC2 DRAM botm       OK         61 degrees C / 141 degrees F
      FPC 3 EA2_HMC0 Logic die       OK         74 degrees C / 165 degrees F
      FPC 3 EA2_HMC0 DRAM botm       OK         71 degrees C / 159 degrees F
      FPC 3 EA2_HMC1 Logic die       OK         76 degrees C / 168 degrees F
      FPC 3 EA2_HMC1 DRAM botm       OK         73 degrees C / 163 degrees F
      FPC 3 EA2_HMC2 Logic die       OK         74 degrees C / 165 degrees F
      FPC 3 EA2_HMC2 DRAM botm       OK         71 degrees C / 159 degrees F
      FPC 3 EA3_HMC0 Logic die       OK         69 degrees C / 156 degrees F
      FPC 3 EA3_HMC0 DRAM botm       OK         66 degrees C / 150 degrees F
      FPC 3 EA3_HMC1 Logic die       OK         68 degrees C / 154 degrees F
      FPC 3 EA3_HMC1 DRAM botm       OK         65 degrees C / 149 degrees F
      FPC 3 EA3_HMC2 Logic die       OK         68 degrees C / 154 degrees F
      FPC 3 EA3_HMC2 DRAM botm       OK         65 degrees C / 149 degrees F
      FPC 3 EA4_HMC0 Logic die       OK         81 degrees C / 177 degrees F
      FPC 3 EA4_HMC0 DRAM botm       OK         78 degrees C / 172 degrees F
      FPC 3 EA4_HMC1 Logic die       OK         80 degrees C / 176 degrees F
      FPC 3 EA4_HMC1 DRAM botm       OK         77 degrees C / 170 degrees F
      FPC 3 EA4_HMC2 Logic die       OK         81 degrees C / 177 degrees F
      FPC 3 EA4_HMC2 DRAM botm       OK         78 degrees C / 172 degrees F
      FPC 3 EA5_HMC0 Logic die       OK         68 degrees C / 154 degrees F
      FPC 3 EA5_HMC0 DRAM botm       OK         65 degrees C / 149 degrees F
      FPC 3 EA5_HMC1 Logic die       OK         70 degrees C / 158 degrees F
      FPC 3 EA5_HMC1 DRAM botm       OK         67 degrees C / 152 degrees F
      FPC 3 EA5_HMC2 Logic die       OK         69 degrees C / 156 degrees F
      FPC 3 EA5_HMC2 DRAM botm       OK         66 degrees C / 150 degrees F
Power PEM 0                          OK         29 degrees C / 84 degrees F
      PEM 1                          OK         27 degrees C / 80 degrees F
      PEM 2                          OK         30 degrees C / 86 degrees F
      PEM 3                          Check
      PEM 4                          Check
      PEM 5                          Check
Fans  Fan Tray 0 Fan 0               OK         Spinning at normal speed
      Fan Tray 0 Fan 1               OK         Spinning at normal speed
      Fan Tray 0 Fan 2               OK         Spinning at normal speed
      Fan Tray 0 Fan 3               OK         Spinning at normal speed
      Fan Tray 0 Fan 4               Failed
      Fan Tray 0 Fan 5               Failed
      Fan Tray 0 Fan 6               OK         Spinning at normal speed
      Fan Tray 0 Fan 7               OK         Spinning at normal speed
      Fan Tray 0 Fan 8               OK         Spinning at normal speed
      Fan Tray 0 Fan 9               OK         Spinning at normal speed
      Fan Tray 0 Fan 10              OK         Spinning at normal speed
```

```
      Fan Tray 1 Fan 0              OK         Spinning at normal speed
      Fan Tray 1 Fan 1              OK         Spinning at normal speed
      Fan Tray 1 Fan 2              OK         Spinning at normal speed
      Fan Tray 1 Fan 3              OK         Spinning at normal speed
      Fan Tray 1 Fan 4              OK         Spinning at normal speed
      Fan Tray 1 Fan 5              OK         Spinning at normal speed
      Fan Tray 1 Fan 6              OK         Spinning at normal speed
      Fan Tray 1 Fan 7              OK         Spinning at normal speed
      Fan Tray 1 Fan 8              OK         Spinning at normal speed
      Fan Tray 1 Fan 9              OK         Spinning at normal speed
      Fan Tray 1 Fan 10             OK         Spinning at normal speed
      SFB 0 Intake-A                OK         32 degrees C / 89 degrees F
      SFB 0 Intake-B                OK         21 degrees C / 69 degrees F
      SFB 0 Exhaust-A               OK         27 degrees C / 80 degrees F
      SFB 0 Exhaust-B               OK         32 degrees C / 89 degrees F
      SFB 0 PF0                     OK         39 degrees C / 102 degrees F
      SFB 0 PF1                     OK         29 degrees C / 84 degrees F
      SFB 1 Intake-A                OK         43 degrees C / 109 degrees F
      SFB 1 Intake-B                OK         20 degrees C / 68 degrees F
      SFB 1 Exhaust-A               OK         25 degrees C / 77 degrees F
      SFB 1 Exhaust-B               OK         44 degrees C / 111 degrees F
      SFB 1 PF0                     OK         50 degrees C / 122 degrees F
      SFB 1 PF1                     OK         29 degrees C / 84 degrees F
      SFB 2 Intake-A                OK         39 degrees C / 102 degrees F
      SFB 2 Intake-B                OK         20 degrees C / 68 degrees F
      SFB 2 Exhaust-A               OK         25 degrees C / 77 degrees F
      SFB 2 Exhaust-B               OK         38 degrees C / 100 degrees F
      SFB 2 PF0                     OK         45 degrees C / 113 degrees F
      SFB 2 PF1                     OK         30 degrees C / 86 degrees F
      SFB 3 Intake-A                OK         36 degrees C / 96 degrees F
      SFB 3 Intake-B                OK         20 degrees C / 68 degrees F
      SFB 3 Exhaust-A               OK         25 degrees C / 77 degrees F
      SFB 3 Exhaust-B               OK         35 degrees C / 95 degrees F
      SFB 3 PF0                     OK         42 degrees C / 107 degrees F
      SFB 3 PF1                     OK         29 degrees C / 84 degrees F
      SFB 4 Intake-A                OK         30 degrees C / 86 degrees F
      SFB 4 Intake-B                OK         20 degrees C / 68 degrees F
      SFB 4 Exhaust-A               OK         25 degrees C / 77 degrees F
      SFB 4 Exhaust-B               OK         31 degrees C / 87 degrees F
      SFB 4 PF0                     OK         41 degrees C / 105 degrees F
      SFB 4 PF1                     OK         29 degrees C / 84 degrees F
      SFB 5 Intake-A                OK         30 degrees C / 86 degrees F
      SFB 5 Intake-B                OK         21 degrees C / 69 degrees F
      SFB 5 Exhaust-A               OK         25 degrees C / 77 degrees F
      SFB 5 Exhaust-B               OK         30 degrees C / 86 degrees F
      SFB 5 PF0                     OK         35 degrees C / 95 degrees F
      SFB 5 PF1                     OK         34 degrees C / 93 degrees F
```

show chassis environment (MX204 Router)

```
user@host> show chassis environment

Class Item                          Status     Measurement
Temp  CB 0 Top Right Inlet Sensor   OK         35 degrees C / 95 degrees F
      CB 0 Top Left Inlet Sensor    OK         37 degrees C / 98 degrees F
      CB 0 Top Right Exhaust Sensor OK         43 degrees C / 109 degrees F
      CB 0 Top Left Exhaust Sensor  OK         50 degrees C / 122 degrees F
      CB 0 CPU Core-0 Temp          OK         47 degrees C / 116 degrees F
      CB 0 CPU Core-1 Temp          OK         48 degrees C / 118 degrees F
      CB 0 CPU Core-2 Temp          OK         47 degrees C / 116 degrees F
      CB 0 CPU Core-3 Temp          OK         47 degrees C / 116 degrees F
```

```
      CB 0 CPU Core-4 Temp          OK         47 degrees C / 116 degrees F
      CB 0 CPU Core-5 Temp          OK         47 degrees C / 116 degrees F
      CB 0 CPU Core-6 Temp          OK         47 degrees C / 116 degrees F
      CB 0 CPU Core-7 Temp          OK         47 degrees C / 116 degrees F
      FPC 0 EA0_HMC0 Logic die      OK         77 degrees C / 170 degrees F
      FPC 0 EA0_HMC0 DRAM botm      OK         74 degrees C / 165 degrees F
      FPC 0 EA0_HMC1 Logic die      OK         81 degrees C / 177 degrees F
      FPC 0 EA0_HMC1 DRAM botm      OK         78 degrees C / 172 degrees F
      FPC 0 EA0 Chip                OK         94 degrees C / 201 degrees F
      FPC 0 EA0-XR0 Chip            OK         64 degrees C / 147 degrees F
      FPC 0 EA0-XR1 Chip            OK         65 degrees C / 149 degrees F
Power PEM 0                         Absent
      PEM 1                         OK         48 degrees C / 118 degrees F
Fans  Fan Tray 0 Fan 0              OK         Spinning at normal speed
      Fan Tray 0 Fan 1              OK         Spinning at normal speed
      Fan Tray 1 Fan 0              OK         Spinning at normal speed
      Fan Tray 1 Fan 1              OK         Spinning at normal speed
      Fan Tray 2 Fan 0              OK         Spinning at normal speed
      Fan Tray 2 Fan 1              OK         Spinning at normal speed
```

show chassis environment (T640 Router)

```
user@host> show chassis environment
Class Item                  Status     Measurement
Temp  PEM 0                 Absent
      PEM 1                 OK         22 degrees C / 71 degrees F
      SCG 0                 OK         30 degrees C / 86 degrees F
      SCG 1                 OK         30 degrees C / 86 degrees F
      Routing Engine 0      Present
      Routing Engine 1      OK         27 degrees C / 80 degrees F
      CB 0                  Present
      CB 1                  OK         33 degrees C / 91 degrees F
      SIB 0                 Absent
      SIB 1                 Absent
      SIB 2                 Absent
      SIB 3                 Absent
      SIB 4                 Absent
      FPC 4 Top             Testing
      FPC 4 Bottom          Testing
      FPC 5 Top             Testing
      FPC 5 Bottom          Testing
      FPC 6 Top             Testing
      FPC 6 Bottom          Testing
      FPM GBUS              OK         23 degrees C / 73 degrees F
      FPM Display           Absent
Fans  Top Left Front fan    OK         Spinning at normal speed
      Top Left Middle fan   OK         Spinning at normal speed
      Top Left Rear fan     OK         Spinning at normal speed
      Top Right Front fan   OK         Spinning at normal speed
      Top Right Middle fan  OK         Spinning at normal speed
      Top Right Rear fan    OK         Spinning at normal speed
      Bottom Left Front fan OK         Spinning at normal speed
      Bottom Left Middle fan OK        Spinning at normal speed
      Bottom Left Rear fan  OK         Spinning at normal speed
      Bottom Right Front fan OK        Spinning at normal speed
      Bottom Right Middle fan OK       Spinning at normal speed
      Bottom Right Rear fan OK         Spinning at normal speed
      Fourth Blower from top OK        Spinning at normal speed
      Bottom Blower         OK         Spinning at normal speed
      Middle Blower         OK         Spinning at normal speed
      Top Blower            OK         Spinning at normal speed
```

```
      Second Blower from top OK         Spinning at normal speed
Misc  CIP                    OK
      SPMB 0                 OK
      SPMB 1                 OK
```

show chassis environment (T4000 Router)

```
user@host> show chassis environment
Class Item                          Status     Measurement
Temp  PEM 0                         OK         33 degrees C / 91 degrees F
      PEM 1                         Absent
      SCG 0                         OK         33 degrees C / 91 degrees F
      SCG 1                         OK         33 degrees C / 91 degrees F
      Routing Engine 0              OK         33 degrees C / 91 degrees F
      Routing Engine 0 CPU          OK         50 degrees C / 122 degrees F
      Routing Engine 1              OK         32 degrees C / 89 degrees F
      Routing Engine 1 CPU          OK         46 degrees C / 114 degrees F
      CB 0                          OK         32 degrees C / 89 degrees F
      CB 1                          OK         33 degrees C / 91 degrees F
      SIB 0                         OK         42 degrees C / 107 degrees F
      SIB 1                         OK         42 degrees C / 107 degrees F
      SIB 2                         OK         42 degrees C / 107 degrees F
      SIB 3                         OK         43 degrees C / 109 degrees F
      SIB 4                         OK         45 degrees C / 113 degrees F
      FPC 0 Fan Intake              OK         34 degrees C / 93 degrees F
      FPC 0 Fan Exhaust             OK         48 degrees C / 118 degrees F
      FPC 0 PMB                     OK         47 degrees C / 116 degrees F
      FPC 0 LMB0                    OK         50 degrees C / 122 degrees F
      FPC 0 LMB1                    OK         41 degrees C / 105 degrees F
      FPC 0 LMB2                    OK         35 degrees C / 95 degrees F
      FPC 0 PFE1 LU2                OK         46 degrees C / 114 degrees F
      FPC 0 PFE1 LU0                OK         41 degrees C / 105 degrees F
      FPC 0 PFE0 LU0                OK         57 degrees C / 134 degrees F
      FPC 0 XF1                     OK         46 degrees C / 114 degrees F
      FPC 0 XF0                     OK         52 degrees C / 125 degrees F
      FPC 0 XM1                     OK         41 degrees C / 105 degrees F
      FPC 0 XM0                     OK         50 degrees C / 122 degrees F
      FPC 0 PFE0 LU1                OK         56 degrees C / 132 degrees F
      FPC 0 PFE0 LU2                OK         45 degrees C / 113 degrees F
      FPC 0 PFE1 LU1                OK         37 degrees C / 98 degrees F
      FPC 3 Fan Intake              OK         36 degrees C / 96 degrees F
      FPC 3 Fan Exhaust             OK         51 degrees C / 123 degrees F
      FPC 3 PMB                     OK         43 degrees C / 109 degrees F
      FPC 3 LMB0                    OK         57 degrees C / 134 degrees F
      FPC 3 LMB1                    OK         54 degrees C / 129 degrees F
      FPC 3 LMB2                    OK         38 degrees C / 100 degrees F
      FPC 3 PFE1 LU2                OK         63 degrees C / 145 degrees F
      FPC 3 PFE1 LU0                OK         45 degrees C / 113 degrees F
      FPC 3 PFE0 LU0                OK         69 degrees C / 156 degrees F
      FPC 3 XF1                     OK         62 degrees C / 143 degrees F
      FPC 3 XF0                     OK         63 degrees C / 145 degrees F
      FPC 3 XM1                     OK         43 degrees C / 109 degrees F
      FPC 3 XM0                     OK         67 degrees C / 152 degrees F
      FPC 3 PFE0 LU1                OK         63 degrees C / 145 degrees F
      FPC 3 PFE0 LU2                OK         66 degrees C / 150 degrees F
      FPC 3 PFE1 LU1                OK         41 degrees C / 105 degrees F
      FPC 5 Top                     OK         39 degrees C / 102 degrees F
      FPC 5 Bottom                  OK         38 degrees C / 100 degrees F
      FPC 6 Fan Intake              OK         33 degrees C / 91 degrees F
      FPC 6 Fan Exhaust             OK         49 degrees C / 120 degrees F
```

```
      FPC 6 PMB                     OK         40 degrees C / 104 degrees F
      FPC 6 LMB0                    OK         60 degrees C / 140 degrees F
      FPC 6 LMB1                    OK         58 degrees C / 136 degrees F
      FPC 6 LMB2                    OK         40 degrees C / 104 degrees F
      FPC 6 PFE1 LU2                OK         69 degrees C / 156 degrees F
      FPC 6 PFE1 LU0                OK         45 degrees C / 113 degrees F
      FPC 6 PFE0 LU0                OK         71 degrees C / 159 degrees F
      FPC 6 XF1                     OK         58 degrees C / 136 degrees F
      FPC 6 XF0                     OK         65 degrees C / 149 degrees F
      FPC 6 XM1                     OK         39 degrees C / 102 degrees F
      FPC 6 XM0                     OK         66 degrees C / 150 degrees F
      FPC 6 PFE0 LU1                OK         69 degrees C / 156 degrees F
      FPC 6 PFE0 LU2                OK         69 degrees C / 156 degrees F
      FPC 6 PFE1 LU1                OK         42 degrees C / 107 degrees F
      FPM GBUS                      OK         24 degrees C / 75 degrees F
      FPM Display                   OK         27 degrees C / 80 degrees F
Fans  Top Left Front fan            OK         Spinning at high speed
      Top Left Middle fan           OK         Spinning at high speed
      Top Left Rear fan             OK         Spinning at high speed
      Top Right Front fan           OK         Spinning at high speed
      Top Right Middle fan          OK         Spinning at high speed
      Top Right Rear fan            OK         Spinning at high speed
      Bottom Left Front fan         OK         Spinning at high speed
      Bottom Left Middle fan        OK         Spinning at high speed
      Bottom Left Rear fan          OK         Spinning at high speed
      Bottom Right Front fan        OK         Spinning at high speed
      Bottom Right Middle fan       OK         Spinning at high speed
      Bottom Right Rear fan         OK         Spinning at high speed
      Rear Tray Top fan             OK         Spinning at high speed
      Rear Tray Second fan          OK         Spinning at high speed
      Rear Tray Third fan           OK         Spinning at high speed
      Rear Tray Fourth fan          OK         Spinning at high speed
      Rear Tray Fifth fan           OK         Spinning at high speed
      Rear Tray Sixth fan           OK         Spinning at high speed
      Rear Tray Seventh fan         OK         Spinning at high speed
      Rear Tray Bottom fan          OK         Spinning at high speed
Misc  CIP                           OK
      SPMB 0                        OK
      SPMB 1                        OK
```

show chassis environment (TX Matrix Router)

```
user@host> show chassis environment

---------------------------------------------------------------------------
Class Item                  Status     Measurement
Temp  PEM 0                 Absent
      PEM 1                 OK         29 degrees C / 84 degrees F
      Routing Engine 0      OK         34 degrees C / 93 degrees F
      Routing Engine 1      OK         34 degrees C / 93 degrees F
      CB 0                  OK         32 degrees C / 89 degrees F
      CB 1                  OK         32 degrees C / 89 degrees F
      SIB 0                 OK         44 degrees C / 111 degrees F
      SIB 0 (B)             OK         44 degrees C / 111 degrees F
      FPM GBUS              OK         27 degrees C / 80 degrees F
      FPM Display           OK         32 degrees C / 89 degrees F
Fans  Top Left Front fan    OK         Spinning at normal speed
      Top Left Middle fan   OK         Spinning at normal speed
      Top Left Rear fan     OK         Spinning at normal speed
      Top Right Front fan   OK         Spinning at normal speed
      Top Right Middle fan  OK         Spinning at normal speed
```

```
      Top Right Rear fan     OK         Spinning at normal speed
      Bottom Left Front fan  OK         Spinning at normal speed
      Bottom Left Middle fan OK         Spinning at normal speed
      Bottom Left Rear fan   OK         Spinning at normal speed
      Bottom Right Front fan OK         Spinning at normal speed
      Bottom Right Middle fan OK        Spinning at normal speed
      Bottom Right Rear fan  OK         Spinning at normal speed
      Rear Tray Top fan      OK         Spinning at normal speed
      Rear Tray Second fan   OK         Spinning at normal speed
      Rear Tray Third fan    OK         Spinning at normal speed
      Rear Tray Fourth fan   OK         Spinning at normal speed
      Rear Tray Fifth fan    OK         Spinning at normal speed
      Rear Tray Sixth fan    OK         Spinning at normal speed
      Rear Tray Seventh fan  OK         Spinning at normal speed
      Rear Tray Bottom fan   OK         Spinning at normal speed
Misc  CIP 0                  OK
      CIP 1                  OK
      SPMB 0                 OK
      SPMB 1                 OK

lcc0-re0:
--------------------------------------------------------------------------
Class Item                   Status     Measurement
Temp  PEM 0                  OK         29 degrees C / 84 degrees F
      PEM 1                  Absent
      SCG 0                  OK         35 degrees C / 95 degrees F
      SCG 1                  Absent
      Routing Engine 0       OK         39 degrees C / 102 degrees F
      Routing Engine 1       OK         36 degrees C / 96 degrees F
      CB 0                   OK         32 degrees C / 89 degrees F
      CB 1                   OK         32 degrees C / 89 degrees F
      SIB 0                  OK         40 degrees C / 104 degrees F
      SIB 0 (B)              OK         51 degrees C / 123 degrees F
      FPC 0 Top              OK         45 degrees C / 113 degrees F
      FPC 0 Bottom           OK         31 degrees C / 87 degrees F
      FPC 1 Top              OK         34 degrees C / 93 degrees F
      FPC 1 Bottom           OK         31 degrees C / 87 degrees F
      FPM GBUS               OK         30 degrees C / 86 degrees F
      FPM Display            OK         34 degrees C / 93 degrees F
Fans  Top Left Front fan     OK         Spinning at normal speed
      Top Left Middle fan    OK         Spinning at normal speed
      Top Left Rear fan      OK         Spinning at normal speed
      Top Right Front fan    OK         Spinning at normal speed
      Top Right Middle fan   OK         Spinning at normal speed
      Top Right Rear fan     OK         Spinning at normal speed
      Bottom Left Front fan  OK         Spinning at normal speed
      Bottom Left Middle fan OK         Spinning at normal speed
      Bottom Left Rear fan   OK         Spinning at normal speed
      Bottom Right Front fan OK         Spinning at normal speed
      Bottom Right Middle fan OK        Spinning at normal speed
      Bottom Right Rear fan  OK         Spinning at normal speed
      Rear Tray Top fan      OK         Spinning at normal speed
      Rear Tray Second fan   OK         Spinning at normal speed
      Rear Tray Third fan    OK         Spinning at normal speed
      Rear Tray Fourth fan   OK         Spinning at normal speed
      Rear Tray Fifth fan    OK         Spinning at normal speed
      Rear Tray Sixth fan    OK         Spinning at normal speed
      Rear Tray Seventh fan  OK         Spinning at normal speed
      Rear Tray Bottom fan   OK         Spinning at normal speed
Misc  CIP                    OK
      SPMB 0                 OK
```

```
      SPMB 1                OK

lcc2-re0:
--------------------------------------------------------------------------
Class Item                  Status     Measurement
Temp  PEM 0                 OK         29 degrees C / 84 degrees F
      PEM 1                 Absent
      SCG 0                 OK         32 degrees C / 89 degrees F
      SCG 1                 Absent
      Routing Engine 0      OK         31 degrees C / 87 degrees F
      Routing Engine 1      OK         32 degrees C / 89 degrees F
      CB 0                  OK         30 degrees C / 86 degrees F
      SIB 0                 OK         38 degrees C / 100 degrees F
      SIB 0 (B)             OK         49 degrees C / 120 degrees F
      FPC 0 Top             OK         45 degrees C / 113 degrees F
      FPC 0 Bottom          OK         33 degrees C / 91 degrees F
      FPC 1 Top             OK         37 degrees C / 98 degrees F
      FPC 1 Bottom          OK         33 degrees C / 91 degrees F
      FPM GBUS              OK         30 degrees C / 86 degrees F
      FPM Display           OK         34 degrees C / 93 degrees F
Fans  Top Left Front fan    OK         Spinning at normal speed
      Top Left Middle fan   OK         Spinning at normal speed
...
```

show chassis environment (T1600 Router)

```
user@host> show chassis environment
Class Item                          Status     Measurement
Temp  PEM 0                         OK         27 degrees C / 80 degrees F
      PEM 1                         Absent
      SCG 0                         OK         31 degrees C / 87 degrees F
      SCG 1                         OK         35 degrees C / 95 degrees F
      Routing Engine 0              OK         30 degrees C / 86 degrees F
      Routing Engine 1              OK         30 degrees C / 86 degrees F
      CB 0                          OK         31 degrees C / 87 degrees F
      CB 1                          OK         31 degrees C / 87 degrees F
      SIB 0                         OK         41 degrees C / 105 degrees F
      SIB 0 (B)                     OK         34 degrees C / 93 degrees F
      SIB 1                         OK         0 degrees C / 32 degrees F
      SIB 1 (B)                     OK         0 degrees C / 32 degrees F
      SIB 2                         OK         0 degrees C / 32 degrees F
      SIB 2 (B)                     OK         0 degrees C / 32 degrees F
      SIB 3                         OK         0 degrees C / 32 degrees F
      SIB 3 (B)                     OK         0 degrees C / 32 degrees F
      SIB 4                         OK         0 degrees C / 32 degrees F
      SIB 4 (B)                     OK         0 degrees C / 32 degrees F
      FPC 0 Top                     OK         49 degrees C / 120 degrees F
      FPC 0 Bottom                  OK         50 degrees C / 122 degrees F
      FPC 1 Top                     OK         48 degrees C / 118 degrees F
      FPC 1 Bottom                  OK         49 degrees C / 120 degrees F
      FPM GBUS                      OK         27 degrees C / 80 degrees F
      FPM Display                   OK         30 degrees C / 86 degrees F
Fans  Top Left Front fan            OK         Spinning at normal speed
      Top Left Middle fan           OK         Spinning at normal speed
      Top Left Rear fan             OK         Spinning at normal speed
      Top Right Front fan           OK         Spinning at normal speed
      Top Right Middle fan          OK         Spinning at normal speed
      Top Right Rear fan            OK         Spinning at normal speed
      Bottom Left Front fan         OK         Spinning at normal speed
      Bottom Left Middle fan        OK         Spinning at normal speed
      Bottom Left Rear fan          OK         Spinning at normal speed
```

```
      Bottom Right Front fan         OK         Spinning at normal speed
      Bottom Right Middle fan        OK         Spinning at normal speed
      Bottom Right Rear fan          OK         Spinning at normal speed
      Rear Tray Top fan              OK         Spinning at normal speed
      Rear Tray Second fan           OK         Spinning at normal speed
      Rear Tray Third fan            OK         Spinning at normal speed
      Rear Tray Fourth fan           OK         Spinning at normal speed
      Rear Tray Fifth fan            OK         Spinning at normal speed
      Rear Tray Sixth fan            OK         Spinning at normal speed
      Rear Tray Seventh fan          OK         Spinning at normal speed
      Rear Tray Bottom fan           OK         Spinning at normal speed
Misc  CIP                            OK
      SPMB 0                         OK
      SPMB 1                         OK
```

show chassis environment (TX Matrix Plus Router)

```
user@host> show chassis environment

---------------------------------------------------------------------------
Class Item                           Status     Measurement
Temp  PEM 0                          OK         28 degrees C / 82 degrees F
      PEM 1                          Absent
      Routing Engine 0               OK         27 degrees C / 80 degrees F
      Routing Engine 1               OK         29 degrees C / 84 degrees F
      CB 0 Intake                    OK         26 degrees C / 78 degrees F
      CB 0 Exhaust A                 OK         25 degrees C / 77 degrees F
      CB 0 Exhaust B                 OK         25 degrees C / 77 degrees F
      CB 1 Intake                    OK         26 degrees C / 78 degrees F
      CB 1 Exhaust A                 OK         26 degrees C / 78 degrees F
      CB 1 Exhaust B                 OK         26 degrees C / 78 degrees F
      SIB F13 0                      OK         47 degrees C / 116 degrees F
      SIB F13 0 (B)                  OK         48 degrees C / 118 degrees F
      SIB F13 1                      OK         38 degrees C / 100 degrees F
      SIB F13 1 (B)                  OK         37 degrees C / 98 degrees F
      SIB F2S 0/0                    OK         27 degrees C / 80 degrees F
      SIB F2S 0/2                    OK         28 degrees C / 82 degrees F
      SIB F2S 0/4                    OK         27 degrees C / 80 degrees F
      SIB F2S 0/6                    OK         28 degrees C / 82 degrees F
      SIB F2S 1/0                    OK         26 degrees C / 78 degrees F
      SIB F2S 1/2                    OK         26 degrees C / 78 degrees F
      SIB F2S 1/4                    OK         26 degrees C / 78 degrees F
      SIB F2S 1/6                    OK         26 degrees C / 78 degrees F
      SIB F2S 2/0                    OK         25 degrees C / 77 degrees F
      SIB F2S 2/2                    OK         25 degrees C / 77 degrees F
      SIB F2S 2/4                    OK         23 degrees C / 73 degrees F
      CIP 0 Intake                   OK         23 degrees C / 73 degrees F
      CIP 0 Exhaust A                OK         24 degrees C / 75 degrees F
      CIP 0 Exhaust B                OK         24 degrees C / 75 degrees F
      CIP 1 Intake                   OK         24 degrees C / 75 degrees F
      CIP 1 Exhaust A                OK         25 degrees C / 77 degrees F
      CIP 1 Exhaust B                OK         25 degrees C / 77 degrees F
Fans  Fan Tray 0 Fan 1               OK         Spinning at normal speed
      Fan Tray 0 Fan 2               OK         Spinning at normal speed
      Fan Tray 0 Fan 3               OK         Spinning at normal speed
      Fan Tray 0 Fan 4               OK         Spinning at normal speed
      Fan Tray 0 Fan 5               OK         Spinning at normal speed
      Fan Tray 0 Fan 6               OK         Spinning at normal speed
      Fan Tray 1 Fan 1               OK         Spinning at normal speed
      Fan Tray 1 Fan 2               OK         Spinning at normal speed
      Fan Tray 1 Fan 3               OK         Spinning at normal speed
```

```
      Fan Tray 1 Fan 4                OK         Spinning at normal speed
      Fan Tray 1 Fan 5                OK         Spinning at normal speed
      Fan Tray 1 Fan 6                OK         Spinning at normal speed
      Fan Tray 2 Fan 1                OK         Spinning at normal speed
      Fan Tray 2 Fan 2                OK         Spinning at normal speed
      Fan Tray 2 Fan 3                OK         Spinning at normal speed
      Fan Tray 2 Fan 4                OK         Spinning at normal speed
      Fan Tray 2 Fan 5                OK         Spinning at normal speed
      Fan Tray 2 Fan 6                OK         Spinning at normal speed
      Fan Tray 2 Fan 7                OK         Spinning at normal speed
      Fan Tray 2 Fan 8                OK         Spinning at normal speed
      Fan Tray 2 Fan 9                OK         Spinning at normal speed
      Fan Tray 3 Fan 1                OK         Spinning at normal speed
      Fan Tray 3 Fan 2                OK         Spinning at normal speed
      Fan Tray 3 Fan 3                OK         Spinning at normal speed
      Fan Tray 3 Fan 4                OK         Spinning at normal speed
      Fan Tray 3 Fan 5                OK         Spinning at normal speed
      Fan Tray 3 Fan 6                OK         Spinning at normal speed
      Fan Tray 3 Fan 7                OK         Spinning at normal speed
      Fan Tray 3 Fan 8                OK         Spinning at normal speed
      Fan Tray 3 Fan 9                OK         Spinning at normal speed
      Fan Tray 4 Fan 1                OK         Spinning at normal speed
      Fan Tray 4 Fan 2                OK         Spinning at normal speed
      Fan Tray 4 Fan 3                OK         Spinning at normal speed
      Fan Tray 4 Fan 4                OK         Spinning at normal speed
      Fan Tray 4 Fan 5                OK         Spinning at normal speed
      Fan Tray 4 Fan 6                OK         Spinning at normal speed
      Fan Tray 4 Fan 7                OK         Spinning at normal speed
      Fan Tray 4 Fan 8                OK         Spinning at normal speed
      Fan Tray 4 Fan 9                OK         Spinning at normal speed
      Fan Tray 5 Fan 1                OK         Spinning at normal speed
      Fan Tray 5 Fan 2                OK         Spinning at normal speed
      Fan Tray 5 Fan 3                OK         Spinning at normal speed
      Fan Tray 5 Fan 4                OK         Spinning at normal speed
      Fan Tray 5 Fan 5                OK         Spinning at normal speed
      Fan Tray 5 Fan 6                OK         Spinning at normal speed
      Fan Tray 5 Fan 7                OK         Spinning at normal speed
      Fan Tray 5 Fan 8                OK         Spinning at normal speed
      Fan Tray 5 Fan 9                OK         Spinning at normal speed
Misc  SPMB 0                          OK
      SPMB 1                          OK

lcc0-re0:
--------------------------------------------------------------------------
Class Item                            Status     Measurement
Temp  PEM 0                           OK         27 degrees C / 80 degrees F
      PEM 1                           Absent
      SCG 0                           OK         31 degrees C / 87 degrees F
      SCG 1                           OK         35 degrees C / 95 degrees F
      Routing Engine 0                OK         30 degrees C / 86 degrees F
      Routing Engine 1                OK         30 degrees C / 86 degrees F
      CB 0                            OK         31 degrees C / 87 degrees F
      CB 1                            OK         31 degrees C / 87 degrees F
      SIB 0                           OK         41 degrees C / 105 degrees F
      SIB 0 (B)                       OK         34 degrees C / 93 degrees F
      SIB 1                           OK         0 degrees C / 32 degrees F
      SIB 1 (B)                       OK         0 degrees C / 32 degrees F
      SIB 2                           OK         0 degrees C / 32 degrees F
      SIB 2 (B)                       OK         0 degrees C / 32 degrees F
      SIB 3                           OK         0 degrees C / 32 degrees F
      SIB 3 (B)                       OK         0 degrees C / 32 degrees F
```

```
      SIB 4                          OK         0 degrees C / 32 degrees F
      SIB 4 (B)                      OK         0 degrees C / 32 degrees F
      FPC 0 Top                      OK         49 degrees C / 120 degrees F
      FPC 0 Bottom                   OK         50 degrees C / 122 degrees F
      FPC 1 Top                      OK         48 degrees C / 118 degrees F
      FPC 1 Bottom                   OK         49 degrees C / 120 degrees F
      FPM GBUS                       OK         27 degrees C / 80 degrees F
      FPM Display                    OK         30 degrees C / 86 degrees F
Fans  Top Left Front fan             OK         Spinning at normal speed
      Top Left Middle fan            OK         Spinning at normal speed
      Top Left Rear fan              OK         Spinning at normal speed
      Top Right Front fan            OK         Spinning at normal speed
      Top Right Middle fan           OK         Spinning at normal speed
      Top Right Rear fan             OK         Spinning at normal speed
      Bottom Left Front fan          OK         Spinning at normal speed
      Bottom Left Middle fan         OK         Spinning at normal speed
      Bottom Left Rear fan           OK         Spinning at normal speed
      Bottom Right Front fan         OK         Spinning at normal speed
      Bottom Right Middle fan        OK         Spinning at normal speed
      Bottom Right Rear fan          OK         Spinning at normal speed
      Rear Tray Top fan              OK         Spinning at normal speed
      Rear Tray Second fan           OK         Spinning at normal speed
      Rear Tray Third fan            OK         Spinning at normal speed
      Rear Tray Fourth fan           OK         Spinning at normal speed
      Rear Tray Fifth fan            OK         Spinning at normal speed
      Rear Tray Sixth fan            OK         Spinning at normal speed
      Rear Tray Seventh fan          OK         Spinning at normal speed
      Rear Tray Bottom fan           OK         Spinning at normal speed
Misc  CIP                            OK
      SPMB 0                         OK
      SPMB 1                         OK
```

show chassis environment (TX Matrix Plus router with 3D SIBs)

```
user@host> show chassis environment

---------------------------------------------------------------------------
Class Item                           Status     Measurement
Temp  PEM 0                          Check      30 degrees C / 86 degrees F
      PEM 1                          OK         33 degrees C / 91 degrees F
      Routing Engine 0               OK         28 degrees C / 82 degrees F
      Routing Engine 0 CPU           OK         42 degrees C / 107 degrees F
      Routing Engine 1               OK         29 degrees C / 84 degrees F
      Routing Engine 1 CPU           OK         44 degrees C / 111 degrees F
      CB 0 Intake                    OK         30 degrees C / 86 degrees F
      CB 0 Exhaust A                 OK         28 degrees C / 82 degrees F
      CB 0 Exhaust B                 OK         30 degrees C / 86 degrees F
      CB 1 Intake                    OK         31 degrees C / 87 degrees F
      CB 1 Exhaust A                 OK         27 degrees C / 80 degrees F
      CB 1 Exhaust B                 OK         31 degrees C / 87 degrees F
      SIB F13 0 Board                OK         44 degrees C / 111 degrees F
      SIB F13 0 XF Junction          OK         62 degrees C / 143 degrees F
      SIB F13 3 Board                OK         45 degrees C / 113 degrees F
      SIB F13 3 XF Junction          OK         60 degrees C / 140 degrees F
      SIB F13 6 Board                OK         47 degrees C / 116 degrees F
      SIB F13 6 XF Junction          OK         62 degrees C / 143 degrees F
      SIB F2S 0/0 Board              OK         32 degrees C / 89 degrees F
      SIB F2S 0/0 XF Junction        OK         42 degrees C / 107 degrees F
      SIB F2S 0/2 Board              OK         31 degrees C / 87 degrees F
      SIB F2S 0/2 XF Junction        OK         41 degrees C / 105 degrees F
      SIB F2S 0/4 Board              OK         31 degrees C / 87 degrees F
```

```
        SIB F2S 0/4 XF Junction        OK         42 degrees C / 107 degrees F
        SIB F2S 0/6 Board              OK         31 degrees C / 87 degrees F
        SIB F2S 0/6 XF Junction        OK         41 degrees C / 105 degrees F
        SIB F2S 1/0 Board              OK         31 degrees C / 87 degrees F
        SIB F2S 1/0 XF Junction        OK         41 degrees C / 105 degrees F
        SIB F2S 1/2 Board              OK         29 degrees C / 84 degrees F
        SIB F2S 1/2 XF Junction        OK         39 degrees C / 102 degrees F
        SIB F2S 1/4 Board              OK         29 degrees C / 84 degrees F
        SIB F2S 1/4 XF Junction        OK         35 degrees C / 95 degrees F
        SIB F2S 1/6 Board              OK         30 degrees C / 86 degrees F
        SIB F2S 1/6 XF Junction        OK         41 degrees C / 105 degrees F
        SIB F2S 2/0 Board              OK         30 degrees C / 86 degrees F
        SIB F2S 2/0 XF Junction        OK         42 degrees C / 107 degrees F
        SIB F2S 2/2 Board              OK         28 degrees C / 82 degrees F
        SIB F2S 2/2 XF Junction        OK         39 degrees C / 102 degrees F
        SIB F2S 2/4 Board              OK         29 degrees C / 84 degrees F
        SIB F2S 2/4 XF Junction        OK         42 degrees C / 107 degrees F
        SIB F2S 2/6 Board              OK         29 degrees C / 84 degrees F
        SIB F2S 2/6 XF Junction        OK         41 degrees C / 105 degrees F
        CIP 0 Intake                   OK         25 degrees C / 77 degrees F
        CIP 0 Exhaust A                OK         26 degrees C / 78 degrees F
        CIP 0 Exhaust B                OK         26 degrees C / 78 degrees F
        CIP 1 Intake                   OK         26 degrees C / 78 degrees F
        CIP 1 Exhaust A                OK         27 degrees C / 80 degrees F
        CIP 1 Exhaust B                OK         27 degrees C / 80 degrees F
Fans    Fan Tray 0 Fan 1               OK         Spinning at normal speed
        Fan Tray 0 Fan 2               OK         Spinning at normal speed
        Fan Tray 0 Fan 3               OK         Spinning at normal speed
        Fan Tray 0 Fan 4               OK         Spinning at normal speed
        Fan Tray 0 Fan 5               OK         Spinning at normal speed
        Fan Tray 0 Fan 6               OK         Spinning at normal speed
        Fan Tray 1 Fan 1               OK         Spinning at normal speed
        Fan Tray 1 Fan 2               OK         Spinning at normal speed
        Fan Tray 1 Fan 3               OK         Spinning at normal speed
        Fan Tray 1 Fan 4               OK         Spinning at normal speed
        Fan Tray 1 Fan 5               OK         Spinning at normal speed
        Fan Tray 1 Fan 6               OK         Spinning at normal speed
        Fan Tray 2 Fan 1               OK         Spinning at normal speed
        Fan Tray 2 Fan 2               OK         Spinning at normal speed
        Fan Tray 2 Fan 3               OK         Spinning at normal speed
        Fan Tray 2 Fan 4               OK         Spinning at normal speed
        Fan Tray 2 Fan 5               OK         Spinning at normal speed
        Fan Tray 2 Fan 6               OK         Spinning at normal speed
        Fan Tray 2 Fan 7               OK         Spinning at normal speed
        Fan Tray 2 Fan 8               OK         Spinning at normal speed
        Fan Tray 2 Fan 9               OK         Spinning at normal speed
        Fan Tray 3 Fan 1               OK         Spinning at normal speed
        Fan Tray 3 Fan 2               OK         Spinning at normal speed
        Fan Tray 3 Fan 3               OK         Spinning at normal speed
        Fan Tray 3 Fan 4               OK         Spinning at normal speed
        Fan Tray 3 Fan 5               OK         Spinning at normal speed
        Fan Tray 3 Fan 6               OK         Spinning at normal speed
        Fan Tray 3 Fan 7               OK         Spinning at normal speed
        Fan Tray 3 Fan 8               OK         Spinning at normal speed
        Fan Tray 3 Fan 9               OK         Spinning at normal speed
        Fan Tray 4 Fan 1               OK         Spinning at normal speed
        Fan Tray 4 Fan 2               OK         Spinning at normal speed
        Fan Tray 4 Fan 3               OK         Spinning at normal speed
        Fan Tray 4 Fan 4               OK         Spinning at normal speed
        Fan Tray 4 Fan 5               OK         Spinning at normal speed
        Fan Tray 4 Fan 6               OK         Spinning at normal speed
```

```
      Fan Tray 4 Fan 7              OK         Spinning at normal speed
      Fan Tray 4 Fan 8              OK         Spinning at normal speed
      Fan Tray 4 Fan 9              OK         Spinning at normal speed
      Fan Tray 5 Fan 1              OK         Spinning at normal speed
      Fan Tray 5 Fan 2              OK         Spinning at normal speed
      Fan Tray 5 Fan 3              OK         Spinning at normal speed
      Fan Tray 5 Fan 4              OK         Spinning at normal speed
      Fan Tray 5 Fan 5              OK         Spinning at normal speed
      Fan Tray 5 Fan 6              OK         Spinning at normal speed
      Fan Tray 5 Fan 7              OK         Spinning at normal speed
      Fan Tray 5 Fan 8              OK         Spinning at normal speed
      Fan Tray 5 Fan 9              Check
Misc  SPMB 0                        OK
      SPMB 1                        OK

lcc0-re0:
--------------------------------------------------------------------------
Class Item                          Status     Measurement
Temp  PEM 0                         OK         29 degrees C / 84 degrees F
      PEM 1                         Check      29 degrees C / 84 degrees F
      SCG 0                         OK         32 degrees C / 89 degrees F
      SCG 1                         OK         33 degrees C / 91 degrees F
      Routing Engine 0              OK         32 degrees C / 89 degrees F
      Routing Engine 0 CPU          OK         51 degrees C / 123 degrees F
      Routing Engine 1              OK         32 degrees C / 89 degrees F
      Routing Engine 1 CPU          OK         49 degrees C / 120 degrees F
      CB 0                          OK         34 degrees C / 93 degrees F
      CB 1                          OK         34 degrees C / 93 degrees F
      SIB 0                         OK         39 degrees C / 102 degrees F
      SIB 0 (B)                     Absent
      SIB 1                         OK         39 degrees C / 102 degrees F
      SIB 1 (B)                     Absent
      SIB 2                         OK         39 degrees C / 102 degrees F
      SIB 2 (B)                     Absent
      FPC 4 Top                     OK         43 degrees C / 109 degrees F
      FPC 4 Bottom                  OK         43 degrees C / 109 degrees F
      FPC 7 Fan Intake              OK         35 degrees C / 95 degrees F
      FPC 7 Fan Exhaust             OK         50 degrees C / 122 degrees F
      FPC 7 PMB                     OK         50 degrees C / 122 degrees F
      FPC 7 LMB0                    OK         55 degrees C / 131 degrees F
      FPC 7 LMB1                    OK         49 degrees C / 120 degrees F
      FPC 7 LMB2                    OK         39 degrees C / 102 degrees F
      FPC 7 PFE1 LU2                OK         55 degrees C / 131 degrees F
      FPC 7 PFE1 LU0                OK         45 degrees C / 113 degrees F
      FPC 7 PFE0 LU0                OK         62 degrees C / 143 degrees F
      FPC 7 XF1                     OK         52 degrees C / 125 degrees F
      FPC 7 XF0                     OK         61 degrees C / 141 degrees F
      FPC 7 XM1                     OK         39 degrees C / 102 degrees F
      FPC 7 XM0                     OK         56 degrees C / 132 degrees F
      FPC 7 PFE0 LU1                OK         60 degrees C / 140 degrees F
      FPC 7 PFE0 LU2                OK         55 degrees C / 131 degrees F
      FPC 7 PFE1 LU1                OK         41 degrees C / 105 degrees F
      FPM GBUS                      OK         24 degrees C / 75 degrees F
      FPM Display                   OK         28 degrees C / 82 degrees F
Fans  Top Left Front fan            OK         Spinning at normal speed
      Top Left Middle fan           OK         Spinning at normal speed
      Top Left Rear fan             OK         Spinning at normal speed
      Top Right Front fan           OK         Spinning at normal speed
      Top Right Middle fan          OK         Spinning at normal speed
      Top Right Rear fan            OK         Spinning at normal speed
      Bottom Left Front fan         OK         Spinning at normal speed
```

```
      Bottom Left Middle fan         OK         Spinning at normal speed
      Bottom Left Rear fan           OK         Spinning at normal speed
      Bottom Right Front fan         OK         Spinning at normal speed
      Bottom Right Middle fan        OK         Spinning at normal speed
      Bottom Right Rear fan          OK         Spinning at normal speed
      Rear Tray fan 1 (Top)          OK         Spinning at normal speed
      Rear Tray fan 2                OK         Spinning at normal speed
      Rear Tray fan 3                OK         Spinning at normal speed
      Rear Tray fan 4                OK         Spinning at normal speed
      Rear Tray fan 5                OK         Spinning at normal speed
      Rear Tray fan 6                OK         Spinning at normal speed
      Rear Tray fan 7                OK         Spinning at normal speed
      Rear Tray fan 8                OK         Spinning at normal speed
      Rear Tray fan 9                OK         Spinning at normal speed
      Rear Tray fan 10               OK         Spinning at normal speed
      Rear Tray fan 11               OK         Spinning at normal speed
      Rear Tray fan 12               OK         Spinning at normal speed
      Rear Tray fan 13               OK         Spinning at normal speed
      Rear Tray fan 14               OK         Spinning at normal speed
      Rear Tray fan 15               OK         Spinning at normal speed
      Rear Tray fan 16 (Bottom)      OK         Spinning at normal speed
Misc  CIP                            OK
      SPMB 0                         OK
      SPMB 1                         OK
```

show chassis environment (EX4200 Standalone Switch)

```
user@switch> show chassis environment
Class Item                           Status     Measurement
Power FPC 0 Power Supply 0           OK
      FPC 0 Power Supply 1           Absent
Temp  FPC 0 CPU                      OK         41 degrees C / 105 degrees F
      FPC 0 EX-PFE1                  OK         42 degrees C / 107 degrees F
      FPC 0 EX-PFE2                  OK         46 degrees C / 114 degrees F
      FPC 0 GEPHY Front Left         OK         25 degrees C / 77 degrees F
      FPC 0 GEPHY Front Right        OK         27 degrees C / 80 degrees F
      FPC 0 Uplink Conn              OK         29 degrees C / 84 degrees F
Fans  FPC 0 Fan 1                    OK         Spinning at normal speed
      FPC 0 Fan 2                    OK         Spinning at normal speed
      FPC 0 Fan 3                    OK         Spinning at normal speed
```

show chassis environment (EX8216 Switch)

```
user@switch> show chassis environment
Class Item                           Status     Measurement
Power PSU 0                          OK
      PSU 1                          OK
      PSU 2                          OK
      PSU 3                          Check
      PSU 4                          Absent
      PSU 5                          Absent
Temp  CB 0 Intake                    OK         23 degrees C / 73 degrees F
      CB 0 Exhaust                   OK         26 degrees C / 78 degrees F
      CB 1 Intake                    OK         22 degrees C / 71 degrees F
      CB 1 Exhaust                   OK         25 degrees C / 77 degrees F
      FPC 4 Intake                   OK         49 degrees C / 120 degrees F
      FPC 4 Exhaust                  OK         59 degrees C / 138 degrees F
      SIB 5 Intake                   OK         25 degrees C / 77 degrees F
      SIB 5 Exhaust                  OK         35 degrees C / 95 degrees F
      SIB 6 Intake                   OK         25 degrees C / 77 degrees F
```

```
      SIB 6 Exhaust                   OK         38 degrees C / 100 degrees F
Fans  Top Fan 1                       OK         Spinning at normal speed
      Top Fan 2                       OK         Spinning at normal speed
      Top Fan 3                       OK         Spinning at normal speed
      Top Fan 4                       OK         Spinning at normal speed
      Top Fan 5                       OK         Spinning at normal speed
      Top Fan 6                       OK         Spinning at normal speed
      Top Fan 7                       OK         Spinning at normal speed
      Top Fan 8                       OK         Spinning at normal speed
      Top Fan 9                       OK         Spinning at normal speed
      Bottom Fan 1                    OK         Spinning at normal speed
      Bottom Fan 2                    OK         Spinning at normal speed
      Bottom Fan 3                    OK         Spinning at normal speed
      Bottom Fan 4                    OK         Spinning at normal speed
      Bottom Fan 5                    OK         Spinning at normal speed
      Bottom Fan 6                    OK         Spinning at normal speed
      Bottom Fan 7                    OK         Spinning at normal speed
      Bottom Fan 8                    OK         Spinning at normal speed
      Bottom Fan 9                    OK         Spinning at normal speed
```

show chassis environment (EX9200 Switch)

```
user@switch> show chassis environment
Class Item                            Status     Measurement
Temp  PEM 0                           Check
      PEM 1                           OK         40 degrees C / 104 degrees F
      PEM 2                           OK         40 degrees C / 104 degrees F
      PEM 3                           Absent
      Routing Engine 0                OK         35 degrees C / 95 degrees F
      Routing Engine 0 CPU            OK         33 degrees C / 91 degrees F
      Routing Engine 1                OK         38 degrees C / 100 degrees F
      Routing Engine 1 CPU            OK         33 degrees C / 91 degrees F
      CB 0 Intake                     OK         35 degrees C / 95 degrees F
      CB 0 Exhaust A                  OK         33 degrees C / 91 degrees F
      CB 0 Exhaust B                  OK         40 degrees C / 104 degrees F
      CB 0 ACBC                       OK         39 degrees C / 102 degrees F
      CB 0 XF A                       OK         49 degrees C / 120 degrees F
      CB 0 XF B                       OK         46 degrees C / 114 degrees F
      CB 1 Intake                     OK         37 degrees C / 98 degrees F
      CB 1 Exhaust A                  OK         32 degrees C / 89 degrees F
      CB 1 Exhaust B                  OK         39 degrees C / 102 degrees F
      CB 1 ACBC                       OK         41 degrees C / 105 degrees F
      CB 1 XF A                       OK         49 degrees C / 120 degrees F
      CB 1 XF B                       OK         49 degrees C / 120 degrees F
      FPC 2 Intake                    OK         37 degrees C / 98 degrees F
      FPC 2 Exhaust A                 OK         40 degrees C / 104 degrees F
      FPC 2 Exhaust B                 OK         34 degrees C / 93 degrees F
      FPC 2 LU 0 TCAM TSen            OK         44 degrees C / 111 degrees F
      FPC 2 LU 0 TCAM Chip            OK         48 degrees C / 118 degrees F
      FPC 2 LU 0 TSen                 OK         44 degrees C / 111 degrees F
      FPC 2 LU 0 Chip                 OK         60 degrees C / 140 degrees F
      FPC 2 MQ 0 TSen                 OK         44 degrees C / 111 degrees F
      FPC 2 MQ 0 Chip                 OK         51 degrees C / 123 degrees F
      FPC 3 Intake                    OK         39 degrees C / 102 degrees F
      FPC 3 Exhaust A                 OK         51 degrees C / 123 degrees F

[...Output truncated...]

     Fans  Top Rear Fan               OK         Spinning at intermediate-speed
     Bottom Rear Fan                  OK         Spinning at intermediate-speed
     Top Middle Fan                   OK         Spinning at intermediate-speed
```

```
     Bottom Middle Fan              OK         Spinning at intermediate-speed
     Top Front Fan                  OK         Spinning at intermediate-speed
     Bottom Front Fan               OK         Spinning at intermediate-speed
```

show chassis environment (EX9251 Switch)

```
user@switch> show chassis environment
Class Item                          Status     Measurement
Temp  CB 0 Top Right Inlet Sensor   OK         29 degrees C / 84 degrees F
      CB 0 Top Left Inlet Sensor    OK         29 degrees C / 84 degrees F
      CB 0 Top Right Exhaust Sensor OK         40 degrees C / 104 degrees F
      CB 0 Top Left Exhaust Sensor  OK         59 degrees C / 138 degrees F
      CB 0 CPU Core-0 Temp          OK         45 degrees C / 113 degrees F
      CB 0 CPU Core-1 Temp          OK         44 degrees C / 111 degrees F
      CB 0 CPU Core-2 Temp          OK         44 degrees C / 111 degrees F
      CB 0 CPU Core-3 Temp          OK         44 degrees C / 111 degrees F
      CB 0 CPU Core-4 Temp          OK         45 degrees C / 113 degrees F
      CB 0 CPU Core-5 Temp          OK         44 degrees C / 111 degrees F
      CB 0 CPU Core-6 Temp          OK         44 degrees C / 111 degrees F
      CB 0 CPU Core-7 Temp          OK         43 degrees C / 109 degrees F
Power PEM 0                         Check
      PEM 1                         OK         36 degrees C / 96 degrees F
Fans  Fan Tray 0 Fan 0              OK         Spinning at normal speed
      Fan Tray 0 Fan 1              OK         Spinning at normal speed
      Fan Tray 1 Fan 0              OK         Spinning at normal speed
      Fan Tray 1 Fan 1              OK         Spinning at normal speed
      Fan Tray 2 Fan 0              Absent
      Fan Tray 2 Fan 1              Absent
```

show chassis environment (EX9253 Switch)

```
user@switch> show chassis environment
Class Item                          Status     Measurement
Temp  CB 0 Exhaust Temp Sensor      OK         37 degrees C / 98 degrees F
      CB 0 Inlet Temp Sensor        OK         31 degrees C / 87 degrees F
      CB 0 CPU DIE Temp Sensor      OK         42 degrees C / 107 degrees F
      CB 1 Exhaust Temp Sensor      OK         31 degrees C / 87 degrees F
      CB 1 Inlet Temp Sensor        OK         28 degrees C / 82 degrees F
      CB 1 CPU DIE Temp Sensor      OK         42 degrees C / 107 degrees F
      FPC 0 Intake Temp Sensor      OK         31 degrees C / 87 degrees F
      FPC 0 Exhaust-A Temp Sensor   OK         58 degrees C / 136 degrees F
      FPC 0 Exhaust-B Temp Sensor   OK         47 degrees C / 116 degrees F
      FPC 1 Intake Temp Sensor      OK         29 degrees C / 84 degrees F
      FPC 1 Exhaust-A Temp Sensor   OK         59 degrees C / 138 degrees F
      FPC 1 Exhaust-B Temp Sensor   OK         48 degrees C / 118 degrees F
Power PEM 0                         OK         54 degrees C / 129 degrees F
      PEM 1                         Check
      PEM 2                         Absent
      PEM 3                         Absent
      PEM 4                         Check
      PEM 5                         OK         61 degrees C / 141 degrees F
Fans  Fan Tray 0 Fan 0              OK         Spinning at normal speed
      Fan Tray 0 Fan 1              OK         Spinning at normal speed
      Fan Tray 0 Fan 2              OK         Spinning at normal speed
      Fan Tray 0 Fan 3              OK         Spinning at normal speed
      Fan Tray 1 Fan 0              OK         Spinning at normal speed
      Fan Tray 1 Fan 1              OK         Spinning at normal speed
      Fan Tray 1 Fan 2              OK         Spinning at normal speed
      Fan Tray 1 Fan 3              OK         Spinning at normal speed
      Fan Tray 2 Fan 0              OK         Spinning at normal speed
```

```
      Fan Tray 2 Fan 1              OK         Spinning at normal speed
      Fan Tray 2 Fan 2              OK         Spinning at normal speed
      Fan Tray 2 Fan 3              OK         Spinning at normal speed
      Fan Tray 3 Fan 0              OK         Spinning at normal speed
      Fan Tray 3 Fan 1              OK         Spinning at normal speed
      Fan Tray 3 Fan 2              OK         Spinning at normal speed
      Fan Tray 3 Fan 3              OK         Spinning at normal speed
```

show chassis environment (QFX Series and OCX Series)

```
user@switch> show chassis environment
Class Item                          Status     Measurement
Temp  CB 0 Top Right Inlet Sensor   OK         29 degrees C / 84 degrees F
      CB 0 Top Left Inlet Sensor    OK         29 degrees C / 84 degrees F
      CB 0 Top Right Exhaust Sensor OK         40 degrees C / 104 degrees F
      CB 0 Top Left Exhaust Sensor  OK         59 degrees C / 138 degrees F
      CB 0 CPU Core-0 Temp          OK         45 degrees C / 113 degrees F
      CB 0 CPU Core-1 Temp          OK         44 degrees C / 111 degrees F
      CB 0 CPU Core-2 Temp          OK         44 degrees C / 111 degrees F
      CB 0 CPU Core-3 Temp          OK         44 degrees C / 111 degrees F
      CB 0 CPU Core-4 Temp          OK         45 degrees C / 113 degrees F
      CB 0 CPU Core-5 Temp          OK         44 degrees C / 111 degrees F
      CB 0 CPU Core-6 Temp          OK         44 degrees C / 111 degrees F
      CB 0 CPU Core-7 Temp          OK         43 degrees C / 109 degrees F
Power PEM 0                         Check
      PEM 1                         OK         36 degrees C / 96 degrees F
Fans  Fan Tray 0 Fan 0              OK         Spinning at normal speed
      Fan Tray 0 Fan 1              OK         Spinning at normal speed
      Fan Tray 1 Fan 0              OK         Spinning at normal speed
      Fan Tray 1 Fan 1              OK         Spinning at normal speed
      Fan Tray 2 Fan 0              Absent
      Fan Tray 2 Fan 1              Absent
```

show chassis environment interconnect-device (QFabric System)

```
user@switch> show chassis environment interconnect-device IC-A0004
Class Item                          Status     Measurement
      CB 0
      CB 0 L Intake                 OK         30 degrees C / 86 degrees F
      CB 0 R Intake                 OK         31 degrees C / 87 degrees F
      CB 0 L Exhaust                OK         32 degrees C / 89 degrees F
      CB 0 R Exhaust                OK         33 degrees C / 91 degrees F
      Routing Engine 0 CPU temp     OK         51 degrees C / 123 degrees F
      CB 1
      CB 1 L Intake                 OK         27 degrees C / 80 degrees F
      CB 1 R Intake                 OK         29 degrees C / 84 degrees F
      CB 1 L Exhaust                OK         31 degrees C / 87 degrees F
      CB 1 R Exhaust                OK         32 degrees C / 89 degrees F
      Routing Engine 1 CPU temp     OK         40 degrees C / 104 degrees F
      FC 0 FPC 0
      FPC 0 L Intake                OK         25 degrees C / 77 degrees F
      FPC 0 R Intake                OK         28 degrees C / 82 degrees F
      FPC 0 L Exhaust               OK         28 degrees C / 82 degrees F
      FPC 0 R Exhaust               OK         29 degrees C / 84 degrees F
      FC 7 FPC 7
      FPC 7 L Intake                OK         25 degrees C / 77 degrees F
      FPC 7 R Intake                OK         26 degrees C / 78 degrees F
      FPC 7 L Exhaust               OK         28 degrees C / 82 degrees F
      FPC 7 R Exhaust               OK         29 degrees C / 84 degrees F
      RC 0 FPC 8
```

```
      FPC 8 L Intake                OK        25 degrees C / 77 degrees F
      FPC 8 R Intake                OK        26 degrees C / 78 degrees F
      FPC 8 L Exhaust               OK        32 degrees C / 89 degrees F
      FPC 8 R Exhaust               OK        30 degrees C / 86 degrees F
      RC 7 FPC 15
      FPC 15 L Intake               OK        24 degrees C / 75 degrees F
      FPC 15 R Intake               OK        25 degrees C / 77 degrees F
      FPC 15 L Exhaust              OK        33 degrees C / 91 degrees F
      FPC 15 R Exhaust              OK        31 degrees C / 87 degrees F
Fans  TFT 0 Fan 0                   OK        Spinning at normal speed
Fans  TFT 0 Fan 1                   OK        Spinning at normal speed
Fans  TFT 0 Fan 2                   OK        Spinning at normal speed
Fans  TFT 0 Fan 3                   OK        Spinning at normal speed
Fans  TFT 0 Fan 4                   OK        Spinning at normal speed
Fans  TFT 0 Fan 5                   OK        Spinning at normal speed
Fans  BFT 1 Fan 0                   OK        Spinning at normal speed
Fans  BFT 1 Fan 1                   OK        Spinning at normal speed
Fans  BFT 1 Fan 2                   OK        Spinning at normal speed
Fans  BFT 1 Fan 3                   Check
Fans  BFT 1 Fan 4                   OK        Spinning at normal speed
Fans  BFT 1 Fan 5                   OK        Spinning at normal speed
Fans  SFT 0 Fan 0 Rotor 0           OK        Spinning at normal speed
Fans  SFT 0 Fan 0 Rotor 1           OK        Spinning at normal speed
Fans  SFT 0 Fan 1 Rotor 0           OK        Spinning at normal speed
Fans  SFT 0 Fan 1 Rotor 1           OK        Spinning at normal speed
Fans  SFT 0 Fan 2 Rotor 0           OK        Spinning at normal speed
Fans  SFT 0 Fan 2 Rotor 1           OK        Spinning at normal speed
Fans  SFT 0 Fan 3 Rotor 0           OK        Spinning at normal speed
Fans  SFT 0 Fan 3 Rotor 1           OK        Spinning at normal speed
Fans  SFT 1 Fan 0 Rotor 0           OK        Spinning at normal speed
Fans  SFT 1 Fan 0 Rotor 1           OK        Spinning at normal speed
Fans  SFT 1 Fan 1 Rotor 0           OK        Spinning at normal speed
Fans  SFT 1 Fan 1 Rotor 1           OK        Spinning at normal speed
Fans  SFT 1 Fan 2 Rotor 0           OK        Spinning at normal speed
Fans  SFT 1 Fan 2 Rotor 1           OK        Spinning at normal speed
Fans  SFT 1 Fan 3 Rotor 0           OK        Spinning at normal speed
Fans  SFT 1 Fan 3 Rotor 1           OK        Spinning at normal speed
Fans  SFT 2 Fan 0 Rotor 0           OK        Spinning at normal speed
Fans  SFT 2 Fan 0 Rotor 1           OK        Spinning at normal speed
Fans  SFT 2 Fan 1 Rotor 0           OK        Spinning at normal speed
Fans  SFT 2 Fan 1 Rotor 1           OK        Spinning at normal speed
Fans  SFT 2 Fan 2 Rotor 0           OK        Spinning at normal speed
Fans  SFT 2 Fan 2 Rotor 1           OK        Spinning at normal speed
Fans  SFT 2 Fan 3 Rotor 0           OK        Spinning at normal speed
Fans  SFT 2 Fan 3 Rotor 1           OK        Spinning at normal speed
Fans  SFT 3 Fan 0 Rotor 0           OK        Spinning at normal speed
Fans  SFT 3 Fan 0 Rotor 1           OK        Spinning at normal speed
Fans  SFT 3 Fan 1 Rotor 0           OK        Spinning at normal speed
Fans  SFT 3 Fan 1 Rotor 1           OK        Spinning at normal speed
Fans  SFT 3 Fan 2 Rotor 0           OK        Spinning at normal speed
Fans  SFT 3 Fan 2 Rotor 1           OK        Spinning at normal speed
Fans  SFT 3 Fan 3 Rotor 0           OK        Spinning at normal speed
Fans  SFT 3 Fan 3 Rotor 1           OK        Spinning at normal speed
Fans  SFT 4 Fan 0 Rotor 0           OK        Spinning at normal speed
Fans  SFT 4 Fan 0 Rotor 1           OK        Spinning at normal speed
Fans  SFT 4 Fan 1 Rotor 0           OK        Spinning at normal speed
Fans  SFT 4 Fan 1 Rotor 1           OK        Spinning at normal speed
Fans  SFT 4 Fan 2 Rotor 0           OK        Spinning at normal speed
Fans  SFT 4 Fan 2 Rotor 1           OK        Spinning at normal speed
Fans  SFT 4 Fan 3 Rotor 0           OK        Spinning at normal speed
Fans  SFT 4 Fan 3 Rotor 1           OK        Spinning at normal speed
```

```
Fans  SFT 5 Fan 0 Rotor 0            OK         Spinning at normal speed
Fans  SFT 5 Fan 0 Rotor 1            OK         Spinning at normal speed
Fans  SFT 5 Fan 1 Rotor 0            OK         Spinning at normal speed
Fans  SFT 5 Fan 1 Rotor 1            OK         Spinning at normal speed
Fans  SFT 5 Fan 2 Rotor 0            OK         Spinning at normal speed
Fans  SFT 5 Fan 2 Rotor 1            OK         Spinning at normal speed
Fans  SFT 5 Fan 3 Rotor 0            OK         Spinning at normal speed
Fans  SFT 5 Fan 3 Rotor 1            OK         Spinning at normal speed
Fans  SFT 6 Fan 0 Rotor 0            OK         Spinning at normal speed
Fans  SFT 6 Fan 0 Rotor 1            OK         Spinning at normal speed
Fans  SFT 6 Fan 1 Rotor 0            OK         Spinning at normal speed
Fans  SFT 6 Fan 1 Rotor 1            OK         Spinning at normal speed
Fans  SFT 6 Fan 2 Rotor 0            OK         Spinning at normal speed
Fans  SFT 6 Fan 2 Rotor 1            OK         Spinning at normal speed
Fans  SFT 6 Fan 3 Rotor 0            OK         Spinning at normal speed
Fans  SFT 6 Fan 3 Rotor 1            OK         Spinning at normal speed
Fans  SFT 7 Fan 0 Rotor 0            OK         Spinning at normal speed
Fans  SFT 7 Fan 0 Rotor 1            OK         Spinning at normal speed
Fans  SFT 7 Fan 1 Rotor 0            OK         Spinning at normal speed
Fans  SFT 7 Fan 1 Rotor 1            OK         Spinning at normal speed
Fans  SFT 7 Fan 2 Rotor 0            OK         Spinning at normal speed
Fans  SFT 7 Fan 2 Rotor 1            OK         Spinning at normal speed
Fans  SFT 7 Fan 3 Rotor 0            OK         Spinning at normal speed
Fans  SFT 7 Fan 3 Rotor 1            OK         Spinning at normal speed
Power PEM 0                          OK         30 degrees C / 86 degrees F
Power PEM 1                          OK         30 degrees C / 86 degrees F
Power PEM 2                          OK         30 degrees C / 86 degrees F
Power PEM 3                          Absent
Power PEM 4                          Absent
Power PEM 5                          Absent
```

show chassis environment node-device (QFabric System)

```
user@switch> show chassis environment node-device node1
Class Item                           Status     Measurement
Power node1 Power Supply 0            Absent
      node1 Power Supply 1            Absent
Fans  node1 Fan Tray 0                Testing
      node1 Fan Tray 1                Testing
      node1 Fan Tray 2                Testing
```

show chassis environment pem node-device (QFabric System)

```
user@switch> show chassis environment pem node-device node1
FPC 0 PEM 0 status:
  State                      Check
  Airflow                    Front to Back
  Temperature                OK
  AC Input:                  OK
  DC Output           Voltage(V) Current(A)  Power(W)  Load(%)
                          12        10           120      18
FPC 0 PEM 1 status:
  State                      Online
  Airflow                    Back to Front
  Temperature                OK
  AC Input:                  OK
  DC Output           Voltage(V) Current(A)  Power(W)  Load(%)
                          11        10           110      17
```

show chassis environment (PTX5000 Packet Transport Router)

```
user@host> show chassis environment
Class Item                          Status     Measurement
Temp  PDU 0                         OK
      PDU 0 PSM 0                   OK         36 degrees C / 96 degrees F
      PDU 0 PSM 1                   OK         38 degrees C / 100 degrees F
      PDU 0 PSM 2                   OK         38 degrees C / 100 degrees F
      PDU 0 PSM 3                   OK         37 degrees C / 98 degrees F
      PDU 1                         Absent
      CCG 0                         OK         44 degrees C / 111 degrees F
      CCG 1                         OK         44 degrees C / 111 degrees F
      Routing Engine 0              OK         62 degrees C / 143 degrees F
      Routing Engine 0 CPU          OK         75 degrees C / 167 degrees F
      Routing Engine 1              OK         51 degrees C / 123 degrees F
      Routing Engine 1 CPU          OK         64 degrees C / 147 degrees F
      CB 0 Intake                   OK         38 degrees C / 100 degrees F
      CB 0 Exhaust A                OK         46 degrees C / 114 degrees F
      CB 0 Exhaust B                OK         42 degrees C / 107 degrees F
      CB 1 Intake                   OK         35 degrees C / 95 degrees F
      CB 1 Exhaust A                OK         39 degrees C / 102 degrees F
      CB 1 Exhaust B                OK         36 degrees C / 96 degrees F
      SIB 0 Exhaust                 OK         47 degrees C / 116 degrees F
      SIB 0 Junction                OK         45 degrees C / 113 degrees F
      SIB 1 Exhaust                 OK         44 degrees C / 111 degrees F
      SIB 1 Junction                OK         43 degrees C / 109 degrees F
      SIB 2 Exhaust                 OK         47 degrees C / 116 degrees F
      SIB 2 Junction                OK         42 degrees C / 107 degrees F
      SIB 3 Exhaust                 OK         43 degrees C / 109 degrees F
      SIB 3 Junction                OK         43 degrees C / 109 degrees F
      SIB 4 Exhaust                 OK         47 degrees C / 116 degrees F
      SIB 4 Junction                OK         42 degrees C / 107 degrees F
      SIB 5 Exhaust                 OK         42 degrees C / 107 degrees F
      SIB 5 Junction                OK         40 degrees C / 104 degrees F
      SIB 6 Exhaust                 OK         46 degrees C / 114 degrees F
      SIB 6 Junction                OK         42 degrees C / 107 degrees F
      SIB 7 Exhaust                 OK         43 degrees C / 109 degrees F
      SIB 7 Junction                OK         39 degrees C / 102 degrees F
      SIB 8 Exhaust                 OK         44 degrees C / 111 degrees F
      SIB 8 Junction                OK         41 degrees C / 105 degrees F
      FPC 0 PMB                     OK         35 degrees C / 95 degrees F
      FPC 0 Intake                  OK         33 degrees C / 91 degrees F
      FPC 0 Exhaust A               OK         51 degrees C / 123 degrees F
      FPC 0 Exhaust B               OK         43 degrees C / 109 degrees F
      FPC 0 TL0                     OK         48 degrees C / 118 degrees F
      FPC 0 TQ0                     OK         53 degrees C / 127 degrees F
      FPC 0 TL1                     OK         56 degrees C / 132 degrees F
      FPC 0 TQ1                     OK         58 degrees C / 136 degrees F
      FPC 0 TL2                     OK         55 degrees C / 131 degrees F
      FPC 0 TQ2                     OK         56 degrees C / 132 degrees F
      FPC 0 TL3                     OK         59 degrees C / 138 degrees F
      FPC 0 TQ3                     OK         59 degrees C / 138 degrees F
      FPC 2 PMB                     OK         35 degrees C / 95 degrees F
      FPC 2 Intake                  OK         34 degrees C / 93 degrees F
      FPC 2 Exhaust A               OK         51 degrees C / 123 degrees F
      FPC 2 Exhaust B               OK         52 degrees C / 125 degrees F
      FPC 2 TL0                     OK         53 degrees C / 127 degrees F
      FPC 2 TQ0                     OK         53 degrees C / 127 degrees F
      FPC 2 TL1                     OK         57 degrees C / 134 degrees F
      FPC 2 TQ1                     OK         58 degrees C / 136 degrees F
      FPC 2 TL2                     OK         54 degrees C / 129 degrees F
```

```
        FPC 2 TQ2                    OK         59 degrees C / 138 degrees F
        FPC 2 TL3                    OK         60 degrees C / 140 degrees F
        FPC 2 TQ3                    OK         64 degrees C / 147 degrees F
        PIC 2/0 Ambient              OK         49 degrees C / 120 degrees F
        FPC 3 PMB                    OK         34 degrees C / 93 degrees F
        FPC 3 Intake                 OK         35 degrees C / 95 degrees F
        FPC 3 Exhaust A              OK         54 degrees C / 129 degrees F
        FPC 3 Exhaust B              OK         49 degrees C / 120 degrees F
        FPC 3 TL0                    OK         49 degrees C / 120 degrees F
        FPC 3 TQ0                    OK         55 degrees C / 131 degrees F
        FPC 3 TL1                    OK         56 degrees C / 132 degrees F
        FPC 3 TQ1                    OK         58 degrees C / 136 degrees F
        FPC 3 TL2                    OK         56 degrees C / 132 degrees F
        FPC 3 TQ2                    OK         59 degrees C / 138 degrees F
        FPC 3 TL3                    OK         62 degrees C / 143 degrees F
        FPC 3 TQ3                    OK         63 degrees C / 145 degrees F
        PIC 3/1                      Absent
        FPC 5 PMB                    OK         35 degrees C / 95 degrees F
        FPC 5 Intake                 OK         34 degrees C / 93 degrees F
        FPC 5 Exhaust A              OK         51 degrees C / 123 degrees F
        FPC 5 Exhaust B              OK         53 degrees C / 127 degrees F
        FPC 5 TL0                    OK         54 degrees C / 129 degrees F
        FPC 5 TQ0                    OK         52 degrees C / 125 degrees F
        FPC 5 TL1                    OK         61 degrees C / 141 degrees F
        FPC 5 TQ1                    OK         60 degrees C / 140 degrees F
        FPC 5 TL2                    OK         55 degrees C / 131 degrees F
        FPC 5 TQ2                    OK         55 degrees C / 131 degrees F
        FPC 5 TL3                    OK         59 degrees C / 138 degrees F
        FPC 5 TQ3                    OK         58 degrees C / 136 degrees F
        PIC 5/0 Ambient              OK         51 degrees C / 123 degrees F
        PIC 5/1 Ambient              OK         34 degrees C / 93 degrees F
        PIC 5/1 cfp-5/1/0            OK         34 degrees C / 93 degrees F
        PIC 5/1 cfp-5/1/1            OK         36 degrees C / 96 degrees F
        FPC 6 PMB                    OK         36 degrees C / 96 degrees F
        FPC 6 Intake                 OK         33 degrees C / 91 degrees F
        FPC 6 Exhaust A              OK         51 degrees C / 123 degrees F
        FPC 6 Exhaust B              OK         39 degrees C / 102 degrees F
        FPC 6 TL0                    OK         44 degrees C / 111 degrees F
        FPC 6 TQ0                    OK         54 degrees C / 129 degrees F
        FPC 6 TL1                    OK         59 degrees C / 138 degrees F
        FPC 6 TQ1                    OK         58 degrees C / 136 degrees F
        FPC 6 TL2                    OK         60 degrees C / 140 degrees F
        FPC 6 TQ2                    OK         57 degrees C / 134 degrees F
        FPC 6 TL3                    OK         65 degrees C / 149 degrees F
        FPC 6 TQ3                    OK         60 degrees C / 140 degrees F
        FPC 7 PMB                    OK         35 degrees C / 95 degrees F
        FPC 7 Intake                 OK         33 degrees C / 91 degrees F
        FPC 7 Exhaust A              OK         53 degrees C / 127 degrees F
        FPC 7 Exhaust B              OK         40 degrees C / 104 degrees F
        FPC 7 TL0                    OK         46 degrees C / 114 degrees F
        FPC 7 TQ0                    OK         58 degrees C / 136 degrees F
        FPC 7 TL1                    OK         53 degrees C / 127 degrees F
        FPC 7 TQ1                    OK         59 degrees C / 138 degrees F
        FPC 7 TL2                    OK         56 degrees C / 132 degrees F
        FPC 7 TQ2                    OK         61 degrees C / 141 degrees F
        FPC 7 TL3                    OK         63 degrees C / 145 degrees F
        FPC 7 TQ3                    OK         63 degrees C / 145 degrees F
        FPM I2CS                     OK         37 degrees C / 98 degrees F
Fans    Fan Tray 0 Fan 1             OK         3042 RPM
        Fan Tray 0 Fan 2             OK         3042 RPM
        Fan Tray 0 Fan 3             OK         3000 RPM
```

```
      Fan Tray 0 Fan 4                OK         3042 RPM
      Fan Tray 0 Fan 5                OK         3000 RPM
      Fan Tray 0 Fan 6                OK         3042 RPM
      Fan Tray 0 Fan 7                OK         3085 RPM
      Fan Tray 0 Fan 8                OK         3042 RPM
      Fan Tray 0 Fan 9                OK         3042 RPM
      Fan Tray 0 Fan 10               OK         3085 RPM
      Fan Tray 0 Fan 11               OK         3085 RPM
      Fan Tray 0 Fan 12               OK         3128 RPM
      Fan Tray 0 Fan 13               OK         3128 RPM
      Fan Tray 0 Fan 14               OK         3042 RPM
      Fan Tray 1 Fan 1                OK         2299 RPM
      Fan Tray 1 Fan 2                OK         2399 RPM
      Fan Tray 1 Fan 3                OK         2299 RPM
      Fan Tray 1 Fan 4                OK         2266 RPM
      Fan Tray 1 Fan 5                OK         2266 RPM
      Fan Tray 1 Fan 6                OK         2366 RPM
      Fan Tray 2 Fan 1                OK         2199 RPM
      Fan Tray 2 Fan 2                OK         2133 RPM
      Fan Tray 2 Fan 3                OK         2366 RPM
      Fan Tray 2 Fan 4                OK         2233 RPM
      Fan Tray 2 Fan 5                OK         2399 RPM
      Fan Tray 2 Fan 6                OK         2233 RPM
Misc  SPMB 0 Intake                   OK         50 degrees C / 122 degrees F
      SPMB 1 Intake                   OK         40 degrees C / 104 degrees F
```

show chassis environment (PTX5000 Packet Transport Router with FPC2-PTX-P1A)

```
user@host> show chassis environment
Class Item                            Status     Measurement
Temp  PDU 0                           OK
      PDU 0 PSM 0                     OK         41 degrees C / 105 degrees F
      PDU 0 PSM 1                     Absent
      PDU 0 PSM 2                     OK         43 degrees C / 109 degrees F
      PDU 0 PSM 3                     Absent
      PDU 0 PSM 4                     OK         44 degrees C / 111 degrees F
      PDU 0 PSM 5                     Absent
      PDU 0 PSM 6                     OK         45 degrees C / 113 degrees F
      PDU 0 PSM 7                     Absent
      PDU 1                           OK
      PDU 1 PSM 0                     Absent
      PDU 1 PSM 1                     OK         45 degrees C / 113 degrees F
      PDU 1 PSM 2                     Absent
      PDU 1 PSM 3                     OK         43 degrees C / 109 degrees F
      PDU 1 PSM 4                     Absent
      PDU 1 PSM 5                     OK         46 degrees C / 114 degrees F
      PDU 1 PSM 6                     Absent
      PDU 1 PSM 7                     OK         46 degrees C / 114 degrees F
      CCG 0                           OK         27 degrees C / 80 degrees F
      CCG 1                           OK         29 degrees C / 84 degrees F
...
```

show chassis environment (PTX1000 Packet Transport Router)

```
user@host> show chassis environment
Class Item                            Status     Measurement
Power FPC 0 Power Supply 0            Absent
      FPC 0 Power Supply 1            Absent
      FPC 0 Power Supply 2            OK
      FPC 0 Power Supply 3            OK
```

```
Temp  FPC 0 Intake Temp Sensor       OK         25 degrees C / 77 degrees F
      FPC 0 Exhaust Temp Sensor      OK         35 degrees C / 95 degrees F
      FPC 0 Mezz Temp Sensor 0       OK         25 degrees C / 77 degrees F
      FPC 0 Mezz Temp Sensor 1       OK         34 degrees C / 93 degrees F
      FPC 0 PE2 Temp Sensor          OK         34 degrees C / 93 degrees F
      FPC 0 PE1 Temp Sensor          OK         32 degrees C / 89 degrees F
      FPC 0 PF0 Temp Sensor          OK         40 degrees C / 104 degrees F
      FPC 0 PE0 Temp Sensor          OK         33 degrees C / 91 degrees F
      FPC 0 PE5 Temp Sensor          OK         34 degrees C / 93 degrees F
      FPC 0 PE4 Temp Sensor          OK         34 degrees C / 93 degrees F
      FPC 0 PF1 Temp Sensor          OK         41 degrees C / 105 degrees F
      FPC 0 PE3 Temp Sensor          OK         36 degrees C / 96 degrees F
      FPC 0 CPU Die Temp Sensor      OK         40 degrees C / 104 degrees F
      FPC 0 OCXO Temp Sensor         OK         37 degrees C / 98 degrees F
Fans  FPC 0 Fan Tray 0               OK         Spinning at normal speed
      FPC 0 Fan Tray 1               OK         Spinning at normal speed
      FPC 0 Fan Tray 2               OK         Spinning at normal speed
```

show chassis environment (PTX10008 Router)

```
user@host> show chassis environment
Class Item                           Status     Measurement
      Routing Engine 0 CPU           OK         40 degrees C / 104 degrees F
      Routing Engine 1 CPU           OK         40 degrees C / 104 degrees F
Temp  CB 0 Intake Temp Sensor        OK         29 degrees C / 84 degrees F
      CB 0 Exhaust Temp Sensor       OK         33 degrees C / 91 degrees F
      CB 1 Intake Temp Sensor        OK         28 degrees C / 82 degrees F
      CB 1 Exhaust Temp Sensor       OK         32 degrees C / 89 degrees F
      FPC 0 Intake-A Temp Sensor     OK         38 degrees C / 100 degrees F
      FPC 0 Intake-B Temp Sensor     OK         34 degrees C / 93 degrees F
      FPC 0 Exhaust-A Temp Sensor    OK         36 degrees C / 96 degrees F
      FPC 0 Exhaust-B Temp Sensor    OK         37 degrees C / 98 degrees F
      FPC 0 Exhaust-C Temp Sensor    OK         40 degrees C / 104 degrees F
      FPC 0 PE0 Temp Sensor          OK         40 degrees C / 104 degrees F
      FPC 0 PE1 Temp Sensor          OK         42 degrees C / 107 degrees F
      FPC 0 PE2 Temp Sensor          OK         44 degrees C / 111 degrees F
      FPC 0 LCPU Temp Sensor         OK         41 degrees C / 105 degrees F
      FPC 1 Intake-A Temp Sensor     OK         37 degrees C / 98 degrees F
      FPC 1 Intake-B Temp Sensor     OK         33 degrees C / 91 degrees F
      FPC 1 Exhaust-A Temp Sensor    OK         37 degrees C / 98 degrees F
      FPC 1 Exhaust-B Temp Sensor    OK         38 degrees C / 100 degrees F
      FPC 1 Exhaust-C Temp Sensor    OK         40 degrees C / 104 degrees F
      FPC 1 PE0 Temp Sensor          OK         41 degrees C / 105 degrees F
      FPC 1 PE1 Temp Sensor          OK         41 degrees C / 105 degrees F
      FPC 1 PE2 Temp Sensor          OK         45 degrees C / 113 degrees F
      FPC 1 LCPU Temp Sensor         OK         40 degrees C / 104 degrees F
      FPC 2 Intake-A Temp Sensor     OK         44 degrees C / 111 degrees F
      FPC 2 Intake-B Temp Sensor     OK         30 degrees C / 86 degrees F
      FPC 2 Exhaust-A Temp Sensor    OK         52 degrees C / 125 degrees F
      FPC 2 Exhaust-B Temp Sensor    OK         54 degrees C / 129 degrees F
      FPC 2 Exhaust-C Temp Sensor    OK         52 degrees C / 125 degrees F
      FPC 2 PE0 Temp Sensor          OK         49 degrees C / 120 degrees F
      FPC 2 PE1 Temp Sensor          OK         59 degrees C / 138 degrees F
      FPC 2 PE2 Temp Sensor          OK         49 degrees C / 120 degrees F
      FPC 2 PE3 Temp Sensor          OK         60 degrees C / 140 degrees F
      FPC 2 PE4 Temp Sensor          OK         49 degrees C / 120 degrees F
      FPC 2 PE5 Temp Sensor          OK         63 degrees C / 145 degrees F
      FPC 2 LCPU Temp Sensor         OK         47 degrees C / 116 degrees F
      FPC 3 Intake-A Temp Sensor     OK         42 degrees C / 107 degrees F
      FPC 3 Intake-B Temp Sensor     OK         30 degrees C / 86 degrees F
      FPC 3 Exhaust-A Temp Sensor    OK         46 degrees C / 114 degrees F
```

```
FPC 3 Exhaust-B Temp Sensor    OK        48 degrees C / 118 degrees F
FPC 3 Exhaust-C Temp Sensor    OK        47 degrees C / 116 degrees F
FPC 3 PE0 Temp Sensor          OK        47 degrees C / 116 degrees F
FPC 3 PE1 Temp Sensor          OK        53 degrees C / 127 degrees F
FPC 3 PE2 Temp Sensor          OK        46 degrees C / 114 degrees F
FPC 3 PE3 Temp Sensor          OK        53 degrees C / 127 degrees F
FPC 3 PE4 Temp Sensor          OK        48 degrees C / 118 degrees F
FPC 3 PE5 Temp Sensor          OK        57 degrees C / 134 degrees F
FPC 3 LCPU Temp Sensor         OK        47 degrees C / 116 degrees F
FPC 5 Intake-A Temp Sensor     Failed
FPC 5 Intake-B Temp Sensor     Failed
FPC 5 Exhaust-A Temp Sensor    OK        40 degrees C / 104 degrees F
FPC 5 Exhaust-B Temp Sensor    OK        40 degrees C / 104 degrees F
FPC 5 Exhaust-C Temp Sensor    OK        41 degrees C / 105 degrees F
FPC 5 PE0 Temp Sensor          OK        46 degrees C / 114 degrees F
FPC 5 PE1 Temp Sensor          OK        48 degrees C / 118 degrees F
FPC 5 PE2 Temp Sensor          OK        51 degrees C / 123 degrees F
FPC 5 LCPU Temp Sensor         Failed
FPC 6 Intake-A Temp Sensor     OK        40 degrees C / 104 degrees F
FPC 6 Intake-B Temp Sensor     OK        36 degrees C / 96 degrees F
FPC 6 Exhaust-A Temp Sensor    OK        39 degrees C / 102 degrees F
FPC 6 Exhaust-B Temp Sensor    OK        39 degrees C / 102 degrees F
FPC 6 Exhaust-C Temp Sensor    OK        39 degrees C / 102 degrees F
FPC 6 PE0 Temp Sensor          OK        44 degrees C / 111 degrees F
FPC 6 PE1 Temp Sensor          OK        45 degrees C / 113 degrees F
FPC 6 PE2 Temp Sensor          OK        50 degrees C / 122 degrees F
FPC 6 LCPU Temp Sensor         OK        40 degrees C / 104 degrees F
SIB 0 Intake-A Temp Sensor     OK        37 degrees C / 98 degrees F
SIB 0 Intake-B Temp Sensor     OK        30 degrees C / 86 degrees F
SIB 0 Exhaust-A Temp Sensor    OK        33 degrees C / 91 degrees F
SIB 0 Exhaust-B Temp Sensor    OK        38 degrees C / 100 degrees F
SIB 0 PF0 Temp Sensor          OK        46 degrees C / 114 degrees F
SIB 0 PF1 Temp Sensor          OK        39 degrees C / 102 degrees F
SIB 1 Intake-A Temp Sensor     OK        43 degrees C / 109 degrees F
SIB 1 Intake-B Temp Sensor     OK        34 degrees C / 93 degrees F
SIB 1 Exhaust-A Temp Sensor    OK        36 degrees C / 96 degrees F
SIB 1 Exhaust-B Temp Sensor    OK        44 degrees C / 111 degrees F
SIB 1 PF0 Temp Sensor          OK        54 degrees C / 129 degrees F
SIB 1 PF1 Temp Sensor          OK        41 degrees C / 105 degrees F
SIB 2 Intake-A Temp Sensor     OK        46 degrees C / 114 degrees F
SIB 2 Intake-B Temp Sensor     OK        35 degrees C / 95 degrees F
SIB 2 Exhaust-A Temp Sensor    OK        37 degrees C / 98 degrees F
SIB 2 Exhaust-B Temp Sensor    OK        47 degrees C / 116 degrees F
SIB 2 PF0 Temp Sensor          OK        55 degrees C / 131 degrees F
SIB 2 PF1 Temp Sensor          OK        42 degrees C / 107 degrees F
SIB 3 Intake-A Temp Sensor     OK        45 degrees C / 113 degrees F
SIB 3 Intake-B Temp Sensor     OK        35 degrees C / 95 degrees F
SIB 3 Exhaust-A Temp Sensor    OK        36 degrees C / 96 degrees F
SIB 3 Exhaust-B Temp Sensor    OK        45 degrees C / 113 degrees F
SIB 3 PF0 Temp Sensor          OK        54 degrees C / 129 degrees F
SIB 3 PF1 Temp Sensor          OK        42 degrees C / 107 degrees F
SIB 4 Intake-A Temp Sensor     OK        46 degrees C / 114 degrees F
SIB 4 Intake-B Temp Sensor     OK        34 degrees C / 93 degrees F
SIB 4 Exhaust-A Temp Sensor    OK        36 degrees C / 96 degrees F
SIB 4 Exhaust-B Temp Sensor    OK        46 degrees C / 114 degrees F
SIB 4 PF0 Temp Sensor          OK        54 degrees C / 129 degrees F
SIB 4 PF1 Temp Sensor          OK        41 degrees C / 105 degrees F
SIB 5 Intake-A Temp Sensor     OK        38 degrees C / 100 degrees F
SIB 5 Intake-B Temp Sensor     OK        31 degrees C / 87 degrees F
SIB 5 Exhaust-A Temp Sensor    OK        34 degrees C / 93 degrees F
SIB 5 Exhaust-B Temp Sensor    OK        39 degrees C / 102 degrees F
```

```
      SIB 5 PF0 Temp Sensor          OK         44 degrees C / 111 degrees F
      SIB 5 PF1 Temp Sensor          OK         42 degrees C / 107 degrees F
Power Power Supply 0                 OK
      Power Supply 1                 OK
      Power Supply 2                 OK
      Power Supply 3                 OK
      Power Supply 4                 Check
      Power Supply 5                 OK
Fans  Fan Tray 0 Fan 0               OK         Spinning at normal speed
      Fan Tray 0 Fan 1               OK         Spinning at normal speed
      Fan Tray 0 Fan 2               OK         Spinning at normal speed
      Fan Tray 0 Fan 3               OK         Spinning at normal speed
      Fan Tray 0 Fan 4               Failed
      Fan Tray 0 Fan 5               Failed
      Fan Tray 0 Fan 6               OK         Spinning at normal speed
      Fan Tray 0 Fan 7               OK         Spinning at normal speed
      Fan Tray 0 Fan 8               OK         Spinning at normal speed
      Fan Tray 0 Fan 9               OK         Spinning at normal speed
      Fan Tray 0 Fan 10              OK         Spinning at normal speed
      Fan Tray 1 Fan 0               OK         Spinning at normal speed
      Fan Tray 1 Fan 1               OK         Spinning at normal speed
      Fan Tray 1 Fan 2               OK         Spinning at normal speed
      Fan Tray 1 Fan 3               OK         Spinning at normal speed
      Fan Tray 1 Fan 4               OK         Spinning at normal speed
      Fan Tray 1 Fan 5               OK         Spinning at normal speed
      Fan Tray 1 Fan 6               OK         Spinning at normal speed
      Fan Tray 1 Fan 7               OK         Spinning at normal speed
      Fan Tray 1 Fan 8               OK         Spinning at normal speed
      Fan Tray 1 Fan 9               OK         Spinning at normal speed
      Fan Tray 1 Fan 10              OK         Spinning at normal speed
```

show chassis environment (PTX10016 Router)

```
user@host> show chassis environment
Class Item                           Status     Measurement
      Routing Engine 0 CPU           OK         34 degrees C / 93 degrees F
      Routing Engine 1 CPU           OK         34 degrees C / 93 degrees F
Temp  CB 0 Intake Temp Sensor        OK         20 degrees C / 68 degrees F
      CB 0 Exhaust Temp Sensor       OK         24 degrees C / 75 degrees F
      CB 1 Intake Temp Sensor        OK         20 degrees C / 68 degrees F
      CB 1 Exhaust Temp Sensor       OK         23 degrees C / 73 degrees F
      FPC 1 Intake-A Temp Sensor     OK         37 degrees C / 98 degrees F
      FPC 1 Intake-B Temp Sensor     OK         32 degrees C / 89 degrees F
      FPC 1 Exhaust-A Temp Sensor    OK         37 degrees C / 98 degrees F
      FPC 1 Exhaust-B Temp Sensor    OK         36 degrees C / 96 degrees F
      FPC 1 Exhaust-C Temp Sensor    OK         36 degrees C / 96 degrees F
      FPC 1 PE0 Temp Sensor          OK         45 degrees C / 113 degrees F
      FPC 1 PE1 Temp Sensor          OK         46 degrees C / 114 degrees F
      FPC 1 PE2 Temp Sensor          OK         54 degrees C / 129 degrees F
      FPC 1 LCPU Temp Sensor         OK         35 degrees C / 95 degrees F
      FPC 3 Intake-A Temp Sensor     OK         35 degrees C / 95 degrees F
      FPC 3 Intake-B Temp Sensor     OK         31 degrees C / 87 degrees F
      FPC 3 Exhaust-A Temp Sensor    OK         36 degrees C / 96 degrees F
      FPC 3 Exhaust-B Temp Sensor    OK         35 degrees C / 95 degrees F
      FPC 3 Exhaust-C Temp Sensor    OK         33 degrees C / 91 degrees F
      FPC 3 PE0 Temp Sensor          OK         43 degrees C / 109 degrees F
      FPC 3 PE1 Temp Sensor          OK         45 degrees C / 113 degrees F
      FPC 3 PE2 Temp Sensor          OK         49 degrees C / 120 degrees F
      FPC 3 LCPU Temp Sensor         OK         35 degrees C / 95 degrees F
      FPC 6 Intake-A Temp Sensor     OK         34 degrees C / 93 degrees F
      FPC 6 Intake-B Temp Sensor     OK         31 degrees C / 87 degrees F
```

```
      FPC 6 Exhaust-A Temp Sensor    OK         35 degrees C / 95 degrees F
      FPC 6 Exhaust-B Temp Sensor    OK         35 degrees C / 95 degrees F
      FPC 6 Exhaust-C Temp Sensor    OK         35 degrees C / 95 degrees F
      FPC 6 PE0 Temp Sensor          OK         43 degrees C / 109 degrees F
      FPC 6 PE1 Temp Sensor          OK         43 degrees C / 109 degrees F
      FPC 6 PE2 Temp Sensor          OK         47 degrees C / 116 degrees F
      FPC 6 LCPU Temp Sensor         OK         35 degrees C / 95 degrees F
      FPC 8 Intake-A Temp Sensor     OK         34 degrees C / 93 degrees F
      FPC 8 Intake-B Temp Sensor     OK         31 degrees C / 87 degrees F
      FPC 8 Exhaust-A Temp Sensor    OK         37 degrees C / 98 degrees F
      FPC 8 Exhaust-B Temp Sensor    OK         37 degrees C / 98 degrees F
      FPC 8 Exhaust-C Temp Sensor    OK         38 degrees C / 100 degrees F
      FPC 8 PE0 Temp Sensor          OK         42 degrees C / 107 degrees F
      FPC 8 PE1 Temp Sensor          OK         44 degrees C / 111 degrees F
      FPC 8 PE2 Temp Sensor          OK         47 degrees C / 116 degrees F
      FPC 8 LCPU Temp Sensor         OK         33 degrees C / 91 degrees F
      FPC 9 Intake-A Temp Sensor     OK         44 degrees C / 111 degrees F
      FPC 9 Intake-B Temp Sensor     OK         28 degrees C / 82 degrees F
      FPC 9 Exhaust-A Temp Sensor    OK         51 degrees C / 123 degrees F
      FPC 9 Exhaust-B Temp Sensor    OK         52 degrees C / 125 degrees F
      FPC 9 Exhaust-C Temp Sensor    OK         48 degrees C / 118 degrees F
      FPC 9 PE0 Temp Sensor          OK         52 degrees C / 125 degrees F
      FPC 9 PE1 Temp Sensor          OK         66 degrees C / 150 degrees F
      FPC 9 PE2 Temp Sensor          OK         50 degrees C / 122 degrees F
      FPC 9 PE3 Temp Sensor          OK         65 degrees C / 149 degrees F
      FPC 9 PE4 Temp Sensor          OK         51 degrees C / 123 degrees F
      FPC 9 PE5 Temp Sensor          OK         68 degrees C / 154 degrees F
      FPC 9 LCPU Temp Sensor         OK         46 degrees C / 114 degrees F
Power Power Supply 0                 OK         22 degrees C / 71 degrees F
      Power Supply 1                 OK         23 degrees C / 73 degrees F
      Power Supply 2                 OK         23 degrees C / 73 degrees F
      Power Supply 3                 OK         21 degrees C / 69 degrees F
      Power Supply 4                 OK         22 degrees C / 71 degrees F
      Power Supply 5                 OK         25 degrees C / 77 degrees F
      Power Supply 6                 OK         21 degrees C / 69 degrees F
      Power Supply 7                 Absent
      Power Supply 8                 Absent
      Power Supply 9                 Absent
Fans  Fan Tray 0 Fan 0               OK         Spinning at normal speed
      Fan Tray 0 Fan 1               OK         Spinning at normal speed
      Fan Tray 0 Fan 2               OK         Spinning at normal speed
      Fan Tray 0 Fan 3               OK         Spinning at normal speed
      Fan Tray 0 Fan 4               OK         Spinning at normal speed
      Fan Tray 0 Fan 5               OK         Spinning at normal speed
      Fan Tray 0 Fan 6               OK         Spinning at normal speed
      Fan Tray 0 Fan 7               OK         Spinning at normal speed
      Fan Tray 0 Fan 8               OK         Spinning at normal speed
      Fan Tray 0 Fan 9               OK         Spinning at normal speed
      Fan Tray 0 Fan 10              OK         Spinning at normal speed
      Fan Tray 0 Fan 11              OK         Spinning at normal speed
      Fan Tray 0 Fan 12              OK         Spinning at normal speed
      Fan Tray 0 Fan 13              OK         Spinning at normal speed
      Fan Tray 0 Fan 14              OK         Spinning at normal speed
      Fan Tray 0 Fan 15              OK         Spinning at normal speed
      Fan Tray 0 Fan 16              OK         Spinning at normal speed
      Fan Tray 0 Fan 17              OK         Spinning at normal speed
      Fan Tray 0 Fan 18              OK         Spinning at normal speed
      Fan Tray 0 Fan 19              OK         Spinning at normal speed
      Fan Tray 0 Fan 20              OK         Spinning at normal speed
      Fan Tray 1 Fan 0               OK         Spinning at normal speed
      Fan Tray 1 Fan 1               OK         Spinning at normal speed
```

```
Fan Tray 1 Fan 2               OK         Spinning at normal speed
Fan Tray 1 Fan 3               OK         Spinning at normal speed
Fan Tray 1 Fan 4               OK         Spinning at normal speed
Fan Tray 1 Fan 5               OK         Spinning at normal speed
Fan Tray 1 Fan 6               OK         Spinning at normal speed
Fan Tray 1 Fan 7               OK         Spinning at normal speed
Fan Tray 1 Fan 8               OK         Spinning at normal speed
Fan Tray 1 Fan 9               OK         Spinning at normal speed
Fan Tray 1 Fan 10              OK         Spinning at normal speed
Fan Tray 1 Fan 11              OK         Spinning at normal speed
Fan Tray 1 Fan 12              OK         Spinning at normal speed
Fan Tray 1 Fan 13              OK         Spinning at normal speed
Fan Tray 1 Fan 14              OK         Spinning at normal speed
Fan Tray 1 Fan 15              OK         Spinning at normal speed
Fan Tray 1 Fan 16              OK         Spinning at normal speed
Fan Tray 1 Fan 17              OK         Spinning at normal speed
Fan Tray 1 Fan 18              OK         Spinning at normal speed
Fan Tray 1 Fan 19              OK         Spinning at normal speed
Fan Tray 1 Fan 20              OK         Spinning at normal speed
SIB 0 Intake-A Temp Sensor     OK         20 degrees C / 68 degrees F
SIB 0 Intake-B Temp Sensor     OK         20 degrees C / 68 degrees F
SIB 0 Intake-C Temp Sensor     OK         16 degrees C / 60 degrees F
SIB 0 Exhaust-A Temp Sensor    OK         28 degrees C / 82 degrees F
SIB 0 Exhaust-B Temp Sensor    OK         28 degrees C / 82 degrees F
SIB 0 Exhaust-C Temp Sensor    OK         23 degrees C / 73 degrees F
SIB 0 PF0 Temp Sensor          OK         30 degrees C / 86 degrees F
SIB 0 PF1 Temp Sensor          OK         30 degrees C / 86 degrees F
SIB 0 PF2 Temp Sensor          OK         31 degrees C / 87 degrees F
SIB 0 PF3 Temp Sensor          OK         32 degrees C / 89 degrees F
SIB 0 PF4 Temp Sensor          OK         27 degrees C / 80 degrees F
SIB 0 PF5 Temp Sensor          OK         26 degrees C / 78 degrees F
SIB 1 Intake-A Temp Sensor     OK         22 degrees C / 71 degrees F
SIB 1 Intake-B Temp Sensor     OK         22 degrees C / 71 degrees F
SIB 1 Intake-C Temp Sensor     OK         16 degrees C / 60 degrees F
SIB 1 Exhaust-A Temp Sensor    OK         29 degrees C / 84 degrees F
SIB 1 Exhaust-B Temp Sensor    OK         31 degrees C / 87 degrees F
SIB 1 Exhaust-C Temp Sensor    OK         23 degrees C / 73 degrees F
SIB 1 PF0 Temp Sensor          OK         32 degrees C / 89 degrees F
SIB 1 PF1 Temp Sensor          OK         31 degrees C / 87 degrees F
SIB 1 PF2 Temp Sensor          OK         33 degrees C / 91 degrees F
SIB 1 PF3 Temp Sensor          OK         38 degrees C / 100 degrees F
SIB 1 PF4 Temp Sensor          OK         28 degrees C / 82 degrees F
SIB 1 PF5 Temp Sensor          OK         26 degrees C / 78 degrees F
SIB 2 Intake-A Temp Sensor     OK         24 degrees C / 75 degrees F
SIB 2 Intake-B Temp Sensor     OK         21 degrees C / 69 degrees F
SIB 2 Intake-C Temp Sensor     OK         16 degrees C / 60 degrees F
SIB 2 Exhaust-A Temp Sensor    OK         28 degrees C / 82 degrees F
SIB 2 Exhaust-B Temp Sensor    OK         32 degrees C / 89 degrees F
SIB 2 Exhaust-C Temp Sensor    OK         23 degrees C / 73 degrees F
SIB 2 PF0 Temp Sensor          OK         31 degrees C / 87 degrees F
SIB 2 PF1 Temp Sensor          OK         30 degrees C / 86 degrees F
SIB 2 PF2 Temp Sensor          OK         33 degrees C / 91 degrees F
SIB 2 PF3 Temp Sensor          OK         41 degrees C / 105 degrees F
SIB 2 PF4 Temp Sensor          OK         27 degrees C / 80 degrees F
SIB 2 PF5 Temp Sensor          OK         26 degrees C / 78 degrees F
SIB 3 Intake-A Temp Sensor     OK         22 degrees C / 71 degrees F
SIB 3 Intake-B Temp Sensor     OK         23 degrees C / 73 degrees F
SIB 3 Intake-C Temp Sensor     OK         16 degrees C / 60 degrees F
SIB 3 Exhaust-A Temp Sensor    OK         29 degrees C / 84 degrees F
SIB 3 Exhaust-B Temp Sensor    OK         31 degrees C / 87 degrees F
SIB 3 Exhaust-C Temp Sensor    OK         24 degrees C / 75 degrees F
```

```
      SIB 3 PF0 Temp Sensor          OK         32 degrees C / 89 degrees F
      SIB 3 PF1 Temp Sensor          OK         30 degrees C / 86 degrees F
      SIB 3 PF2 Temp Sensor          OK         31 degrees C / 87 degrees F
      SIB 3 PF3 Temp Sensor          OK         39 degrees C / 102 degrees F
      SIB 3 PF4 Temp Sensor          OK         27 degrees C / 80 degrees F
      SIB 3 PF5 Temp Sensor          OK         26 degrees C / 78 degrees F
      SIB 4 Intake-A Temp Sensor     OK         22 degrees C / 71 degrees F
      SIB 4 Intake-B Temp Sensor     OK         25 degrees C / 77 degrees F
      SIB 4 Intake-C Temp Sensor     OK         16 degrees C / 60 degrees F
      SIB 4 Exhaust-A Temp Sensor    OK         29 degrees C / 84 degrees F
      SIB 4 Exhaust-B Temp Sensor    OK         32 degrees C / 89 degrees F
      SIB 4 Exhaust-C Temp Sensor    OK         23 degrees C / 73 degrees F
      SIB 4 PF0 Temp Sensor          OK         32 degrees C / 89 degrees F
      SIB 4 PF1 Temp Sensor          OK         31 degrees C / 87 degrees F
      SIB 4 PF2 Temp Sensor          OK         32 degrees C / 89 degrees F
      SIB 4 PF3 Temp Sensor          OK         40 degrees C / 104 degrees F
      SIB 4 PF4 Temp Sensor          OK         26 degrees C / 78 degrees F
      SIB 4 PF5 Temp Sensor          OK         25 degrees C / 77 degrees F
      SIB 5 Intake-A Temp Sensor     OK         21 degrees C / 69 degrees F
      SIB 5 Intake-B Temp Sensor     OK         20 degrees C / 68 degrees F
      SIB 5 Intake-C Temp Sensor     OK         16 degrees C / 60 degrees F
      SIB 5 Exhaust-A Temp Sensor    OK         27 degrees C / 80 degrees F
      SIB 5 Exhaust-B Temp Sensor    OK         27 degrees C / 80 degrees F
      SIB 5 Exhaust-C Temp Sensor    OK         23 degrees C / 73 degrees F
      SIB 5 PF0 Temp Sensor          OK         30 degrees C / 86 degrees F
      SIB 5 PF1 Temp Sensor          OK         29 degrees C / 84 degrees F
      SIB 5 PF2 Temp Sensor          OK         30 degrees C / 86 degrees F
      SIB 5 PF3 Temp Sensor          OK         32 degrees C / 89 degrees F
      SIB 5 PF4 Temp Sensor          OK         28 degrees C / 82 degrees F
      SIB 5 PF5 Temp Sensor          OK         27 degrees C / 80 degrees F
```

show chassis environment (ACX2000 Universal Metro Router)

```
user@host> show chassis environment
Class Item                           Status     Measurement
      PCB Left                       OK         44 degrees C / 111 degrees F
      SFP+ Xcvr                      OK         50 degrees C / 122 degrees F
      FEB                            OK         70 degrees C / 158 degrees F
      PCB Up                         OK         63 degrees C / 145 degrees F
      PCB Mid                        OK         66 degrees C / 150 degrees F
      Telecom Mod                    OK         65 degrees C / 149 degrees F
      Routing Engine                 OK         54 degrees C / 129 degrees F
      Heater off
```

show chassis environment (ACX4000 Universal Metro Router)

On the ACX4000 router, the MIC output of the **show chassis environment** command varies depending on the number of temperature channels present in the installed MIC.

```
user@host> show chassis environment

Class Item                           Status     Measurement
Temp  PEM 0                          OK         33 degrees C / 91 degrees F
      PEM 1                          Absent
      PCB Bottom                     OK         30 degrees C / 86 degrees F
      PCB Middle                     OK         34 degrees C / 93 degrees F
      BCM56445                       OK         33 degrees C / 91 degrees F
      SFP+ Xcvr                      OK         32 degrees C / 89 degrees F
      Fan tray inlet                 OK         39 degrees C / 102 degrees F
      Exhaust                        OK         30 degrees C / 86 degrees F
```

```
      Routing Engine                  OK         32 degrees C / 89 degrees F
      Heater off
Pic   PIC 0/0 Channel 0               OK         28 degrees C / 82 degrees F
      PIC 0/0 Channel 1               OK         29 degrees C / 84 degrees F
      PIC 0/0 Channel 2               OK         0 degrees C / 32 degrees F
      PIC 0/0 Channel 3               OK         0 degrees C / 32 degrees F
      PIC 0/0 Channel 4               OK         0 degrees C / 32 degrees F
      PIC 0/0 Channel 5               OK         0 degrees C / 32 degrees F
      PIC 0/0 Channel 6               OK         0 degrees C / 32 degrees F
      PIC 0/0 Channel 7               OK         0 degrees C / 32 degrees F
      PIC 0/0 Channel 8               OK         0 degrees C / 32 degrees F
      PIC 0/0 Channel 9               OK         0 degrees C / 32 degrees F
      PIC 1/0 Channel 0               OK         33 degrees C / 91 degrees F
      PIC 1/0 Channel 1               OK         31 degrees C / 87 degrees F
      PIC 1/0 Channel 2               OK         30 degrees C / 86 degrees F
      PIC 1/0 Channel 3               OK         0 degrees C / 32 degrees F
      PIC 1/0 Channel 4               OK         0 degrees C / 32 degrees F
      PIC 1/0 Channel 5               OK         0 degrees C / 32 degrees F
      PIC 1/0 Channel 6               OK         0 degrees C / 32 degrees F
      PIC 1/0 Channel 7               OK         0 degrees C / 32 degrees F
      PIC 1/0 Channel 8               OK         0 degrees C / 32 degrees F
      PIC 1/1 Channel 0               OK         31 degrees C / 87 degrees F
      PIC 1/1 Channel 1               OK         29 degrees C / 84 degrees F
      PIC 1/1 Channel 2               OK         28 degrees C / 82 degrees F
      PIC 1/1 Channel 3               OK         0 degrees C / 32 degrees F
      PIC 1/1 Channel 4               OK         0 degrees C / 32 degrees F
      PIC 1/1 Channel 5               OK         0 degrees C / 32 degrees F
      PIC 1/1 Channel 6               OK         0 degrees C / 32 degrees F
      PIC 1/1 Channel 7               OK         0 degrees C / 32 degrees F
      PIC 1/1 Channel 8               OK         0 degrees C / 32 degrees F
Fans  Fan 1                           OK         Spinning at normal speed
      Fan 2                           OK         Spinning at normal speed
```

show chassis environment (ACX5048 Router)

```
user@host> show chassis environment

Class Item                            Status     Measurement
Power FPC 0 Power Supply 0            Absent
      FPC 0 Power Supply 1            OK
Temp  FPC 0 Sensor TopMiddle E        OK         23 degrees C / 73 degrees F
      FPC 0 Sensor TopRight C         OK         18 degrees C / 64 degrees F
      FPC 0 Sensor TopLeft C          OK         21 degrees C / 69 degrees F
      FPC 0 Sensor TopRight E         OK         20 degrees C / 68 degrees F
      FPC 0 Sensor CPURight C         OK         23 degrees C / 73 degrees F
      FPC 0 Sensor CPULeft E          OK         22 degrees C / 71 degrees F
      FPC 0 Sensor CPU Die Temp       OK         39 degrees C / 102 degrees F
Fans  FPC 0 Fan Tray 0                OK         Spinning at normal speed
      FPC 0 Fan Tray 1                OK         Spinning at normal speed
      FPC 0 Fan Tray 2                OK         Spinning at normal speed
      FPC 0 Fan Tray 3                OK         Spinning at normal speed
      FPC 0 Fan Tray 4                OK         Spinning at normal speed
```

show chassis environment (ACX5096 Router)

```
user@host> show chassis environment

Class Item                            Status     Measurement
Power FPC 0 Power Supply 0            OK
      FPC 0 Power Supply 1            OK
```

```
Temp  FPC 0 Sensor TopMiddle E       OK         32 degrees C / 89 degrees F
      FPC 0 Sensor TopRight I        OK         29 degrees C / 84 degrees F
      FPC 0 Sensor TopLeft I         OK         23 degrees C / 73 degrees F
      FPC 0 Sensor TopRight E        OK         28 degrees C / 82 degrees F
      FPC 0 Sensor CPURight I        OK         30 degrees C / 86 degrees F
      FPC 0 Sensor CPULeft I         OK         29 degrees C / 84 degrees F
      FPC 0 Sensor Die Temp          OK         46 degrees C / 114 degrees F
      FPC 0 Mezz Temp                OK         23 degrees C / 73 degrees F
Fans  FPC 0 Fan Tray 0               OK         Spinning at normal speed
      FPC 0 Fan Tray 1               OK         Spinning at normal speed
      FPC 0 Fan Tray 2               OK         Spinning at normal speed
```

show chassis environment (ACX500 Router)

```
user@host> show chassis environment

Class Item                           Status     Measurement
      Power Mod                      OK         47 degrees C / 116 degrees F
      BCM54610                       OK         46 degrees C / 114 degrees F
      DPLL31404                      OK         45 degrees C / 113 degrees F
      CPLD                           OK         42 degrees C / 107 degrees F
      1588-FPGA                      OK         43 degrees C / 109 degrees F
      NPU                            OK         62 degrees C / 143 degrees F
      MAC sensor 1                   OK         40 degrees C / 104 degrees F
      MAC sensor 2                   OK         38 degrees C / 100 degrees F
      SFP PHY                        OK         38 degrees C / 100 degrees F
      Combo/RJ45 PHY                 OK         37 degrees C / 98 degrees F
      SFP sensor 1                   OK         35 degrees C / 95 degrees F
      SFP sensor 2                   OK         33 degrees C / 91 degrees F
      SFP sensor 3                   OK         32 degrees C / 89 degrees F
      Routing Engine                 OK         54 degrees C / 129 degrees F
      Heater off
```

show chassis environment fpc

List of Syntax

Syntax

show chassis environment fpc
<*slot*>

Syntax (TX Matrix and TX Matrix Plus Routers)

show chassis environment fpc
<lcc *number*>
<*slot*>

Syntax (MX Series Routers)

show chassis environment fpc
<*slot*>
<all-members>
<local>
<member *member-id*>

Syntax (MX2010, MX10003, MX204, MX2008, and MX10008 Universal Routing Platforms)

show chassis environment fpc
<*slot*>

Syntax (MX2020 Universal Routing Platforms)

show chassis environment fpc
<*slot*>
<satellite [fpc-slot *slot-id* |device-alias *alias-name*]

Syntax (QFX Series)

show chassis environment fpc
<fpc-slot>
interconnect-device *name*

Syntax (OCX Series)

show chassis environment fpc
<fpc-slot>

Syntax (PTX3000 Series)

show chassis environment fpc
<fpc-slot>

Syntax (PTX10008 Series)

```
show chassis environment fpc
<fpc-slot>
```

Syntax (EX9251, EX9253 Switches)

```
show chassis environment fpc
<fpc-slot>
```

Release Information

Command introduced before Junos OS Release 7.4.
Command introduced in Junos OS Release 9.0 for EX Series switches.
Command introduced in Junos OS Release 11.1 for QFX Series.
Command introduced in Junos OS Release 12.1X48 for PTX Series Packet Transport Routers.
Command introduced in Junos OS Release 12.1 for T4000 Core Routers.
Command introduced in Junos OS Release 12.3 for MX 2010 and MX2020 Universal Routing Platforms.
Command introduced in Junos OS Release 14.1X53-D20 for the OCX Series.
satellite option introduced in Junos OS Release 14.2R3.
Command introduced in Junos OS Release 17.2 for MX2008 Universal Routing Platforms.
Command introduced in Junos OS Release 17.2 for PTX10008 Routers.
Command introduced in Junos OS Release 17.3 for MX10003 Universal Routing Platforms.
Command introduced in Junos OS Release 17.4 for MX204 Universal Routing Platforms.
Command introduced in Junos OS Release 18.1R1 for EX9251 switches.
Command introduced in Junos OS Release 18.2 for EX9253 Switches.
Command introduced in Junos OS Release 18.2R1 for MX10008 Universal Routing Platforms.

Description

(M40e, M120, M160, M320, MX Series, T Series routers, EX Series, QFX Series, and PTX Series routers only) Display environmental information about Flexible PIC Concentrators (FPCs).

Options

none—Display environmental information about all FPCs. On a TX Matrix router, display environmental information about all FPCs on the TX Matrix router and its attached T640 routers. On a TX Matrix Plus router, display environmental information about all FPCs on the TX Matrix Plus router and its attached routers.

all-members—(MX Series routers only) (Optional) Display environmental information for the FPCs in all the members of the Virtual Chassis configuration.

interconnect-device *name*—(QFabric systems only) (Optional) Display chassis environmental information for the Interconnect device.

lcc *number*—(TX Matrix router and TX Matrix Plus router only) (Optional) Line-card chassis number.

Replace *number* with the following values depending on the LCC configuration:

- 0 through 3, when T640 routers are connected to a TX Matrix router in a routing matrix.
- 0 through 3, when T1600 routers are connected to a TX Matrix Plus router in a routing matrix.

- 0 through 7, when T1600 routers are connected to a TX Matrix Plus router with 3D SIBs in a routing matrix.
- 0, 2, 4, or 6, when T4000 routers are connected to a TX Matrix Plus router with 3D SIBs in a routing matrix.

local—(MX Series routers only) (Optional) Display environmental information for the FPCs in the local Virtual Chassis member.

member *member-id*—(MX Series routers only) (Optional) Display environmental information for the FPCs in the specified member of the Virtual Chassis configuration. Replace ***member-id*** with a value of 0 or 1.

satellite [fpc-slot *slot-id* | device-alias *alias-name*]—(Junos Fusion only)(Optional) Display environmental information for the FPCs in the specified satellite device in a Junos Fusion, or for all satellite devices in the Junos Fusion if no satellite devices are specified.

slot* or *fpc-slot—(Optional) Display environmental information about an individual FPC:

- (TX Matrix and TX Matrix Plus routers only) On a TX Matrix router, if you specify the number of the T640 router by using only the **lcc *number*** option (the recommended method), replace ***slot*** with a value from **0** through **7**. Similarly, on a TX Matrix Plus router, if you specify the number of the router by using only the **lcc *number*** option (the recommended method), replace ***slot*** with a value from **0** through **7**. Otherwise, replace ***slot*** with a value from **0** through **31**. For example, the following commands have the same result:

  ```
  user@host> show chassis environment fpc 1 lcc 1
  user@host> show chassis environment fpc 9
  ```

- M120 router—Replace ***slot*** with a value from **0** through **5.**
- MX240 router—Replace ***slot*** with a value from **0** through **2**.
- MX480 router—Replace ***slot*** with a value from **0** through **5**.
- MX960 router—Replace ***slot*** with a value from **0** through **11**.
- MX2010 router—Replace ***slot*** with a value from **0** through **9**.
- MX2020 router—Replace ***slot*** with a value from **0** through **19**.
- MX2008 router—Replace ***slot*** with a value from **0** through **9**.
- Other routers—Replace ***slot*** with a value from **0** through **7**.
- EX Series switches:
  - EX3200 switches and EX4200 standalone switches—Replace ***slot*** with 0.
  - EX4200 switches in a Virtual Chassis configuration—Replace ***slot*** with a value from 0 through 9 (switch's member ID).

  - EX6210 switches–Replace ***slot*** with a value from 0 through 3 (line card only), 4 or 5 (line card or Switch Fabric and Rotuing Engine (SRE) module), or 6 through 9 (line card only).
  - EX8208 switches—Replace ***slot*** with a value from 0 through 7 (line card).
  - EX8216 switches—Replace ***slot*** with a value from 0 through 15 (line card).
- QFX3500 switches —Replace ***fpc-slot*** with 0 through 15.
- PTX5000 Packet Transport Router—Replace ***fpc-slot*** with 0 through 7.
- PTX3000 Packet Transport Router—Replace ***fpc-slot*** with 0 through 15.

Required Privilege Level view

Related Documentation

- *request chassis fpc*
- *show chassis fpc*
- *show chassis fpc-feb-connectivity*
- *Configuring the Junos OS to Resynchronize FPC Sequence Numbers with Active FPCs when an FPC Comes Online*
- *MX960 Flexible PIC Concentrator Description*

List of Sample Output

show chassis environment fpc 0 (PTX5000 Packet Transport Router) on page 326
show chassis environment fpc 07 (PTX5000 Packet Transport Router with FPC2-PTX-P1A) on page 327
show chassis environment fpc (PTX10008 router) on page 328
show chassis environment fpc (PTX10016 router) on page 331
show chassis environment FPC 1 (MX Routers with Media Services Blade [MSB]) on page 334
show chassis environment fpc (EX9251 Switches) on page 335
show chassis environment fpc (EX9253 Switches) on page 335

Output Fields Table 11 on page 291 lists the output fields for the **show chassis environment fpc** command. Output fields are listed in the approximate order in which they appear.

Table 11: show chassis environment fpc Output Fields

Field Name	Field Description
State	Status of the FPC: • **Unknown**—FPC is not detected by the router. • **Empty**—No FPC is present. • **Present**—FPC is detected by the chassis daemon but is either not supported by the current version of the Junos OS, or the FPC is coming up but not yet online. • **Ready**—FPC is in intermediate or transition state. • **Announce online**—Intermediate state during which the FPC is coming up but not yet online, and the chassis manager acknowledges the chassisd FPC online initiative. • **Online**—FPC is online and running. • **Offline**—FPC is powered down. • **Diagnostics**—FPC is set to operate in diagnostics mode.
Temperature	(M40e and M160 routers and QFX Series only) Temperature of the air flowing past the FPC.
PMB Temperature	(PTX Series only) Temperature of the air flowing past the PMB (bottom of the FPC). The PTX5000 Packet Transport Router with FPC2-PTX-P1A include multiple temperatures for PMB (**TEMP0** and **TEMP1**).
PMB CPU Temperature	(PTX5000 Packet Transport Router with FPC2-PTX-P1A only) Temperature of the air flowing past the PMB CPU.
Temperature Intake	(M320 routers, MX2010 routers, MX2020 routers, MX2008 routers, and PTX Series only) Temperature of the air flowing into the chassis.
Temperature Top	(T Series routers only) Temperature of the air flowing past the top of the FPC.
Temperature Exhaust	(M120 and M320 routers, MX2010 routers, MX2020 routers, MX2008 routers, and PTX Series only) Temperature of the air flowing out of the chassis. The PTX Series Packet Transport Routers, and the MX2010, MX2020, and MX2008 routers include exhaust temperatures for multiple zones (**Exhaust A** and **Exhaust B**).
Temperature Bottom	(T Series routers only) Temperature of the air flowing past the bottom of the FPC.

Table 11: show chassis environment fpc Output Fields (continued)

Field Name	Field Description
TL *n* Temperature	(PTX Series only) Temperature of the air flowing past the specified TL area of the packet forwarding engine (PFE) on the FPC.
TQ *n* Temperature	(PTX Series only) Temperature of the air flowing past the specified TQ area of the packet forwarding engine (PFE) on the FPC.
Temperature MMBO	(T640 router only) Temperature of the air flowing past the type 3 FPC.
Temperature MMB1	(M320 and T Series routers only) Temperature of the air flowing past the type 1, type 2, and type 3 FPC.
Power	Information about the voltage supplied to the FPC. The left column displays the required power, in volts. The right column displays the measured power, in millivolts.
CMB Revision or **BUS revision**	Revision level of the chassis management bus device (M Series router) or bus (T Series routers).

Sample Output

show chassis environment fpc (M120 Router)

```
user@host> show chassis environment fpc
FPC 2 status:
  State                      Online
  Temperature Exhaust A      32 degrees C / 89 degrees F
  Temperature Exhaust B      31 degrees C / 87 degrees F
  Power A-Board
    1.2 V                     1202 mV
    1.5 V                     1508 mV
    1.8 V                     1798 mV
    2.5 V                     2507 mV
    3.3 V                     3351 mV
    5.0 V                     4995 mV
    3.3 V bias                3296 mV
    1.2 V Rocket IO           1205 mV
    1.5 V Rocket IO           1501 mV
  I2C Slave Revision         12
FPC 3 status:
  State                      Online
  Temperature Exhaust A      31 degrees C / 87 degrees F
  Temperature Exhaust B      33 degrees C / 91 degrees F
  Power A-Board
    1.2 V                     1211 mV
    1.5 V                     1501 mV
    1.8 V                     1798 mV
    2.5 V                     2471 mV
    3.3 V                     3293 mV
    5.0 V                     4930 mV
    3.3 V bias                3296 mV
    1.2 V Rocket IO           1205 mV
    1.5 V Rocket IO           1501 mV
  Power B-Board
    1.2 V                     1214 mV
```

```
    1.5 V                     1501 mV
    2.5 V                     2471 mV
    3.3 V                     3300 mV
    5.0 V                     4943 mV
    3.3 V bias                3296 mV
    1.2 V Rocket IO           1205 mV
    1.5 V Rocket IO           1501 mV
  I2C Slave Revision         12
FPC 4 status:
  State                      Online
  Temperature Exhaust A      32 degrees C / 89 degrees F
  Temperature Exhaust B      30 degrees C / 86 degrees F
  Power A-Board
    1.2 V                     1195 mV
    1.5 V                     1504 mV
    1.8 V                     1801 mV
    2.5 V                     2504 mV
    3.3 V                     3293 mV
    5.0 V                     4917 mV
    3.3 V bias                3296 mV
    1.2 V Rocket IO           1202 mV
    1.5 V Rocket IO           1492 mV
  I2C Slave Revision         12
```

show chassis environment fpc (M160 Router)

```
user@host> show chassis environment fpc
FPC 0 status:
  State                        Online
  Temperature               42 degrees C / 107 degrees F
  Power:
    1.5 V                 1500 mV
    2.5 V                 2509 mV
    3.3 V                 3308 mV
    5.0 V                 4991 mV
    5.0 V bias            4952 mV
    8.0 V bias            8307 mV
  CMB Revision              12
FPC 1 status:
  State                        Online
  Temperature               45 degrees C / 113 degrees F
  Power:
    1.5 V                 1498 mV
    2.5 V                 2501 mV
    3.3 V                 3319 mV
    5.0 V                 5020 mV
    5.0 V bias            5025 mV
    8.0 V bias            8307 mV
  CMB Revision              12
```

show chassis environment fpc (M320 Router)

```
user@host> show chassis environment fpc
FPC 0 status:
  State                            Online
  Temperature Intake            27 degrees C / 80 degrees F
  Temperature Exhaust           38 degrees C / 100 degrees F
  Temperature MMB1              31 degrees C / 87 degrees F
  Power:
    1.5 V                     1487 mV
```

```
    1.5 V *                  1494 mV
    1.8 V                    1821 mV
    2.5 V                    2533 mV
    3.3 V                    3323 mV
    5.0 V                    5028 mV
    3.3 V bias               3296 mV
    5.0 V bias               4984 mV
  CMB Revision                 16
FPC 1 status:
  State                           Online
  Temperature Intake           27 degrees C / 80 degrees F
  Temperature Exhaust          37 degrees C / 98 degrees F
  Temperature MMB1             32 degrees C / 89 degrees F
  Power:
    1.5 V                    1504 mV
    1.5 V *                  1499 mV
    1.8 V                    1820 mV
    2.5 V                    2529 mV
    3.3 V                    3328 mV
    5.0 V                    5013 mV
    3.3 V bias               3294 mV
    5.0 V bias               4984 mV
  CMB Revision                 16
FPC 2 status:
  State                           Online
  Temperature Intake           28 degrees C / 82 degrees F
  Temperature Exhaust          38 degrees C / 100 degrees F
  Temperature MMB1             32 degrees C / 89 degrees F
  Power:
    1.5 V                    1498 mV
    1.5 V *                  1487 mV
    1.8 V                    1816 mV
    2.5 V                    2531 mV
    3.3 V                    3324 mV
    5.0 V                    5025 mV
    3.3 V bias               3277 mV
    5.0 V bias               5013 mV
  CMB Revision                 17
FPC 3 status:
...
```

show chassis environment fpc (MX2020 Router)

```
user@host> show chassis environment fpc
FPC 0 status:
  State                      Online
  Temperature Intake         41 degrees C / 105 degrees F
  Temperature Exhaust A      48 degrees C / 118 degrees F
  Temperature Exhaust B      60 degrees C / 140 degrees F
  Temperature LU 0 TSen      56 degrees C / 132 degrees F
  Temperature LU 0 Chip      59 degrees C / 138 degrees F
  Temperature LU 1 TSen      56 degrees C / 132 degrees F
  Temperature LU 1 Chip      61 degrees C / 141 degrees F
  Temperature LU 2 TSen      56 degrees C / 132 degrees F
  Temperature LU 2 Chip      52 degrees C / 125 degrees F
  Temperature LU 3 TSen      56 degrees C / 132 degrees F
  Temperature LU 3 Chip      52 degrees C / 125 degrees F
  Temperature MQ 0 TSen      49 degrees C / 120 degrees F
  Temperature MQ 0 Chip      49 degrees C / 120 degrees F
  Temperature MQ 1 TSen      49 degrees C / 120 degrees F
  Temperature MQ 1 Chip      52 degrees C / 125 degrees F
```

```
  Temperature MQ 2 TSen      49 degrees C / 120 degrees F
  Temperature MQ 2 Chip      45 degrees C / 113 degrees F
  Temperature MQ 3 TSen      49 degrees C / 120 degrees F
  Temperature MQ 3 Chip      46 degrees C / 114 degrees F
  Power
    AS-BIAS3V3-zl2105         3299 mV
    AS-VDD1V8-zl2006          1807 mV
    AS-VDD2V5-zl2006          2512 mV
    AS-AVDD1V0-zl2004          997 mV
    AS-PCIE_1V0-zl2004         996 mV
    AS-VDD3V3-zl2004          3294 mV
    AS-VDD_1V5A-zl2004        1501 mV
    AS-VDD_1V5B-zl2004        1498 mV
    AS-LU0_1V0-zl2004          998 mV
    AS-LU1_1V0-zl2004         1002 mV
    AS-MQ0_1V0-zl2004          999 mV
    AS-MQ1_1V0-zl2004          994 mV
    AS-LU2_1V0-zl2004         1000 mV
    AS-LU3_1V0-zl2004          998 mV
    AS-MQ2_1V0-zl2004         1002 mV
    AS-MQ3_1V0-zl2004          999 mV
    AS-PMB_1V1-zl2006         1096 mV
  I2C Slave Revision         68
FPC 1 status:
  State                      Online
  Temperature Intake         39 degrees C / 102 degrees F
  Temperature Exhaust A      48 degrees C / 118 degrees F
  Temperature Exhaust B      55 degrees C / 131 degrees F
  Temperature LU 0 TSen      52 degrees C / 125 degrees F
  Temperature LU 0 Chip      54 degrees C / 129 degrees F
  Temperature LU 1 TSen      52 degrees C / 125 degrees F
  Temperature LU 1 Chip      56 degrees C / 132 degrees F
  Temperature LU 2 TSen      52 degrees C / 125 degrees F
  Temperature LU 2 Chip      49 degrees C / 120 degrees F
  Temperature LU 3 TSen      52 degrees C / 125 degrees F
  Temperature LU 3 Chip      50 degrees C / 122 degrees F
  Temperature MQ 0 TSen      48 degrees C / 118 degrees F
  Temperature MQ 0 Chip      48 degrees C / 118 degrees F
  Temperature MQ 1 TSen      48 degrees C / 118 degrees F
  Temperature MQ 1 Chip      51 degrees C / 123 degrees F
  Temperature MQ 2 TSen      48 degrees C / 118 degrees F
  Temperature MQ 2 Chip      45 degrees C / 113 degrees F
  Temperature MQ 3 TSen      48 degrees C / 118 degrees F
  Temperature MQ 3 Chip      45 degrees C / 113 degrees F
  Power
    AS-BIAS3V3-zl2105         3291 mV
    AS-VDD1V8-zl2006          1786 mV
    AS-VDD2V5-zl2006          2496 mV
    AS-AVDD1V0-zl2004         1000 mV
    AS-PCIE_1V0-zl2004        1000 mV
    AS-VDD3V3-zl2004          3294 mV
    AS-VDD_1V5A-zl2004        1500 mV
    AS-VDD_1V5B-zl2004        1498 mV
    AS-LU0_1V0-zl2004         1003 mV
    AS-LU1_1V0-zl2004         1000 mV
    AS-MQ0_1V0-zl2004         1000 mV
    AS-MQ1_1V0-zl2004          995 mV
    AS-LU2_1V0-zl2004         1002 mV
    AS-LU3_1V0-zl2004          997 mV
    AS-MQ2_1V0-zl2004         1000 mV
    AS-MQ3_1V0-zl2004          998 mV
```

```
    AS-PMB_1V1-zl2006         1096 mV
  I2C Slave Revision         68
FPC 2 status:
  State                      Online
  Temperature Intake         39 degrees C / 102 degrees F
  Temperature Exhaust A      48 degrees C / 118 degrees F
  Temperature Exhaust B      58 degrees C / 136 degrees F
  Temperature LU 0 TSen      55 degrees C / 131 degrees F
  Temperature LU 0 Chip      57 degrees C / 134 degrees F
  Temperature LU 1 TSen      55 degrees C / 131 degrees F
  Temperature LU 1 Chip      63 degrees C / 145 degrees F
  Temperature LU 2 TSen      55 degrees C / 131 degrees F
  Temperature LU 2 Chip      51 degrees C / 123 degrees F
  Temperature LU 3 TSen      55 degrees C / 131 degrees F
  Temperature LU 3 Chip      52 degrees C / 125 degrees F
  Temperature MQ 0 TSen      48 degrees C / 118 degrees F
  Temperature MQ 0 Chip      50 degrees C / 122 degrees F
  Temperature MQ 1 TSen      48 degrees C / 118 degrees F
  Temperature MQ 1 Chip      52 degrees C / 125 degrees F
  Temperature MQ 2 TSen      48 degrees C / 118 degrees F
  Temperature MQ 2 Chip      47 degrees C / 116 degrees F
  Temperature MQ 3 TSen      48 degrees C / 118 degrees F
  Temperature MQ 3 Chip      47 degrees C / 116 degrees F
  Power
    AS-BIAS3V3-zl2105         3299 mV
    AS-VDD1V8-zl2006          1805 mV
    AS-VDD2V5-zl2006          2510 mV
    AS-AVDD1V0-zl2004          999 mV
    AS-PCIE_1V0-zl2004         998 mV
    AS-VDD3V3-zl2004          3296 mV
    AS-VDD_1V5A-zl2004        1492 mV
    AS-VDD_1V5B-zl2004        1497 mV
    AS-LU0_1V0-zl2004          997 mV
    AS-LU1_1V0-zl2004         1000 mV
    AS-MQ0_1V0-zl2004          998 mV
    AS-MQ1_1V0-zl2004         1001 mV
    AS-LU2_1V0-zl2004          996 mV
    AS-LU3_1V0-zl2004          995 mV
    AS-MQ2_1V0-zl2004          998 mV
    AS-MQ3_1V0-zl2004          997 mV
    AS-PMB_1V1-zl2006         1100 mV
  I2C Slave Revision         68
FPC 3 status:
  State                      Online
  Temperature Intake         41 degrees C / 105 degrees F
  Temperature Exhaust A      48 degrees C / 118 degrees F
  Temperature Exhaust B      58 degrees C / 136 degrees F
  Temperature LU 0 TSen      56 degrees C / 132 degrees F
  Temperature LU 0 Chip      59 degrees C / 138 degrees F
  Temperature LU 1 TSen      56 degrees C / 132 degrees F
  Temperature LU 1 Chip      61 degrees C / 141 degrees F
  Temperature LU 2 TSen      56 degrees C / 132 degrees F
  Temperature LU 2 Chip      51 degrees C / 123 degrees F
  Temperature LU 3 TSen      56 degrees C / 132 degrees F
  Temperature LU 3 Chip      53 degrees C / 127 degrees F
  Temperature MQ 0 TSen      50 degrees C / 122 degrees F
  Temperature MQ 0 Chip      51 degrees C / 123 degrees F
  Temperature MQ 1 TSen      50 degrees C / 122 degrees F
  Temperature MQ 1 Chip      55 degrees C / 131 degrees F
  Temperature MQ 2 TSen      50 degrees C / 122 degrees F
  Temperature MQ 2 Chip      47 degrees C / 116 degrees F
```

```
  Temperature MQ 3 TSen      50 degrees C / 122 degrees F
  Temperature MQ 3 Chip      50 degrees C / 122 degrees F
  Power
    AS-BIAS3V3-zl2105         3305 mV
    AS-VDD1V8-zl2006          1810 mV
    AS-VDD2V5-zl2006          2508 mV
    AS-AVDD1V0-zl2004          999 mV
    AS-PCIE_1V0-zl2004        1001 mV
    AS-VDD3V3-zl2004          3294 mV
    AS-VDD_1V5A-zl2004        1500 mV
    AS-VDD_1V5B-zl2004        1498 mV
    AS-LU0_1V0-zl2004          998 mV
    AS-LU1_1V0-zl2004          998 mV
    AS-MQ0_1V0-zl2004          999 mV
    AS-MQ1_1V0-zl2004          998 mV
    AS-LU2_1V0-zl2004         1000 mV
    AS-LU3_1V0-zl2004         1001 mV
    AS-MQ2_1V0-zl2004          996 mV
    AS-MQ3_1V0-zl2004          998 mV
    AS-PMB_1V1-zl2006         1098 mV
  I2C Slave Revision         68
FPC 4 status:
...
```

show chassis environment fpc (MX2010 Router)

```
user@host> show chassis environment fpc
FPC 0 status:
  State                      Online
  Temperature Intake         36 degrees C / 96 degrees F
  Temperature Exhaust A      42 degrees C / 107 degrees F
  Temperature Exhaust B      51 degrees C / 123 degrees F
  Temperature LU 0 TSen      49 degrees C / 120 degrees F
  Temperature LU 0 Chip      50 degrees C / 122 degrees F
  Temperature LU 1 TSen      49 degrees C / 120 degrees F
  Temperature LU 1 Chip      54 degrees C / 129 degrees F
  Temperature LU 2 TSen      49 degrees C / 120 degrees F
  Temperature LU 2 Chip      45 degrees C / 113 degrees F
  Temperature LU 3 TSen      49 degrees C / 120 degrees F
  Temperature LU 3 Chip      46 degrees C / 114 degrees F
  Temperature MQ 0 TSen      40 degrees C / 104 degrees F
  Temperature MQ 0 Chip      41 degrees C / 105 degrees F
  Temperature MQ 1 TSen      40 degrees C / 104 degrees F
  Temperature MQ 1 Chip      44 degrees C / 111 degrees F
  Temperature MQ 2 TSen      40 degrees C / 104 degrees F
  Temperature MQ 2 Chip      38 degrees C / 100 degrees F
  Temperature MQ 3 TSen      40 degrees C / 104 degrees F
  Temperature MQ 3 Chip      41 degrees C / 105 degrees F
  Power
    AS-BIAS3V3-zl2105         3300 mV
    AS-VDD1V8-zl2006          1805 mV
    AS-VDD2V5-zl2006          2505 mV
    AS-AVDD1V0-zl2004          998 mV
    AS-PCIE_1V0-zl2004         999 mV
    AS-VDD3V3-zl2004          3303 mV
    AS-VDD_1V5A-zl2004        1497 mV
    AS-VDD_1V5B-zl2004        1497 mV
    AS-LU0_1V0-zl2004          998 mV
    AS-LU1_1V0-zl2004         1003 mV
    AS-MQ0_1V0-zl2004          998 mV
    AS-MQ1_1V0-zl2004          998 mV
```

```
    AS-LU2_1V0-zl2004          997 mV
    AS-LU3_1V0-zl2004         1001 mV
    AS-MQ2_1V0-zl2004          996 mV
    AS-MQ3_1V0-zl2004          994 mV
    AS-PMB_1V1-zl2006         1097 mV
  I2C Slave Revision         68
FPC 1 status:
  State                      Online
  Temperature Intake         34 degrees C / 93 degrees F
  Temperature Exhaust A      46 degrees C / 114 degrees F
  Temperature Exhaust B      54 degrees C / 129 degrees F
  Temperature LU 0 TSen      45 degrees C / 113 degrees F
  Temperature LU 0 Chip      55 degrees C / 131 degrees F
  Temperature LU 1 TSen      45 degrees C / 113 degrees F
  Temperature LU 1 Chip      44 degrees C / 111 degrees F
  Temperature LU 2 TSen      45 degrees C / 113 degrees F
  Temperature LU 2 Chip      50 degrees C / 122 degrees F
  Temperature LU 3 TSen      45 degrees C / 113 degrees F
  Temperature LU 3 Chip      58 degrees C / 136 degrees F
  Temperature XM 0 TSen      45 degrees C / 113 degrees F
  Temperature XM 0 Chip      51 degrees C / 123 degrees F
  Temperature XF 0 TSen      45 degrees C / 113 degrees F
  Temperature XF 0 Chip      63 degrees C / 145 degrees F
  Temperature PLX Switch TSen45 degrees C / 113 degrees F
  Temperature PLX Switch Chip47 degrees C / 116 degrees F
  Power
    MPC-BIAS3V3-zl2105        3300 mV
    MPC-VDD3V3-zl6100         3294 mV
    MPC-VDD2V5-zl6100         2505 mV
    MPC-VDD1V8-zl2004         1796 mV
    MPC-AVDD1V0-zl2004         991 mV
    MPC-VDD1V2-zl6100         1196 mV
    MPC-VDD1V5A-zl2004        1491 mV
    MPC-VDD1V5B-zl2004        1492 mV
    MPC-XF_0V9-zl2004          996 mV
    MPC-PCIE_1V0-zl6100       1003 mV
    MPC-LU0_1V0-zl2004         996 mV
    MPC-LU1_1V0-zl2004         996 mV
    MPC-LU2_1V0-zl2004         998 mV
    MPC-LU3_1V0-zl2004         994 mV
    MPC-12VA-BMR453          12031 mV
    MPC-12VB-BMR453          12003 mV
    MPC-PMB_1V1-zl2006        1104 mV
    MPC-PMB_1V2-zl2106        1194 mV
    MPC-XM_0V9-vt273m          911 mV
  I2C Slave Revision         110
FPC 8 status:
  State                      Online
  Temperature Intake         32 degrees C / 89 degrees F
  Temperature Exhaust A      44 degrees C / 111 degrees F
  Temperature Exhaust B      37 degrees C / 98 degrees F
  Temperature LU 0 TCAM TSen 41 degrees C / 105 degrees F
  Temperature LU 0 TCAM Chip 49 degrees C / 120 degrees F
  Temperature LU 0 TSen      41 degrees C / 105 degrees F
  Temperature LU 0 Chip      52 degrees C / 125 degrees F
  Temperature MQ 0 TSen      41 degrees C / 105 degrees F
  Temperature MQ 0 Chip      47 degrees C / 116 degrees F
  Temperature LU 1 TCAM TSen 39 degrees C / 102 degrees F
  Temperature LU 1 TCAM Chip 42 degrees C / 107 degrees F
  Temperature LU 1 TSen      39 degrees C / 102 degrees F
  Temperature LU 1 Chip      46 degrees C / 114 degrees F
```

```
  Temperature MQ 1 TSen      39 degrees C / 102 degrees F
  Temperature MQ 1 Chip      45 degrees C / 113 degrees F
  Power
    MPC-BIAS3V3-zl2105        3296 mV
    MPC-VDD3V3-zl2006         3298 mV
    MPC-VDD2V5-zl2006         2505 mV
    MPC-TCAM_1V0-zl2004        997 mV
    MPC-AVDD1V0-zl2006        1007 mV
    MPC-VDD1V8-zl2006         1803 mV
    MPC-PCIE_1V0-zl2006       1004 mV
    MPC-LU0_1V0-zl2004        1000 mV
    MPC-MQ0_1V0-zl2004         999 mV
    MPC-VDD_1V5-zl2004        1498 mV
    MPC-PMB_1V1-zl2006        1102 mV
    MPC-9VA-BMR453            9009 mV
    MPC-9VB-BMR453            8960 mV
    MPC-PMB_1V2-zl2105        1202 mV
    MPC-LU1_1V0-zl2004        1005 mV
    MPC-MQ1_1V0-zl2004        1000 mV
  I2C Slave Revision         70
FPC 9 status:
  State                      Online
  Temperature Intake         34 degrees C / 93 degrees F
  Temperature Exhaust A      41 degrees C / 105 degrees F
  Temperature Exhaust B      54 degrees C / 129 degrees F
  Temperature LU 0 TSen      51 degrees C / 123 degrees F
  Temperature LU 0 Chip      52 degrees C / 125 degrees F
  Temperature LU 1 TSen      51 degrees C / 123 degrees F
  Temperature LU 1 Chip      55 degrees C / 131 degrees F
  Temperature LU 2 TSen      51 degrees C / 123 degrees F
  Temperature LU 2 Chip      47 degrees C / 116 degrees F
  Temperature LU 3 TSen      51 degrees C / 123 degrees F
  Temperature LU 3 Chip      47 degrees C / 116 degrees F
  Temperature MQ 0 TSen      40 degrees C / 104 degrees F
  Temperature MQ 0 Chip      42 degrees C / 107 degrees F
  Temperature MQ 1 TSen      40 degrees C / 104 degrees F
  Temperature MQ 1 Chip      44 degrees C / 111 degrees F
  Temperature MQ 2 TSen      40 degrees C / 104 degrees F
  Temperature MQ 2 Chip      38 degrees C / 100 degrees F
  Temperature MQ 3 TSen      40 degrees C / 104 degrees F
  Temperature MQ 3 Chip      40 degrees C / 104 degrees F
  Power
    AS-BIAS3V3-zl2105         3302 mV
    AS-VDD1V8-zl2006          1808 mV
    AS-VDD2V5-zl2006          2513 mV
    AS-AVDD1V0-zl2004          997 mV
    AS-PCIE_1V0-zl2004         999 mV
    AS-VDD3V3-zl2004          3294 mV
    AS-VDD_1V5A-zl2004        1503 mV
    AS-VDD_1V5B-zl2004        1502 mV
    AS-LU0_1V0-zl2004          996 mV
    AS-LU1_1V0-zl2004          999 mV
    AS-MQ0_1V0-zl2004          997 mV
    AS-MQ1_1V0-zl2004          999 mV
    AS-LU2_1V0-zl2004          997 mV
    AS-LU3_1V0-zl2004          998 mV
    AS-MQ2_1V0-zl2004         1000 mV
    AS-MQ3_1V0-zl2004         1000 mV
    AS-PMB_1V1-zl2006         1102 mV
  I2C Slave Revision         68
```

show chassis environment fpc (MX2008 Router)

```
user@host> show chassis environment fpc
FPC 0 status:
  State                      Online
  Temperature Intake         29 degrees C / 84 degrees F
  Temperature Exhaust A      43 degrees C / 109 degrees F
  Temperature Exhaust B      42 degrees C / 107 degrees F
  Temperature XL 0 TSen      38 degrees C / 100 degrees F
  Temperature XL 0 Chip      53 degrees C / 127 degrees F
  Temperature XL 0 XR2 0 TSen38 degrees C / 100 degrees F
  Temperature XL 0 XR2 0 Chip60 degrees C / 140 degrees F
  Temperature XL 0 XR2 1 TSen38 degrees C / 100 degrees F
  Temperature XL 0 XR2 1 Chip60 degrees C / 140 degrees F
  Temperature XL 1 TSen      30 degrees C / 86 degrees F
  Temperature XL 1 Chip      43 degrees C / 109 degrees F
  Temperature XL 1 XR2 0 TSen30 degrees C / 86 degrees F
  Temperature XL 1 XR2 0 Chip50 degrees C / 122 degrees F
  Temperature XL 1 XR2 1 TSen30 degrees C / 86 degrees F
  Temperature XL 1 XR2 1 Chip50 degrees C / 122 degrees F
  Temperature XM 0 TSen      42 degrees C / 107 degrees F
  Temperature XM 0 Chip      49 degrees C / 120 degrees F
  Temperature XM 1 TSen      42 degrees C / 107 degrees F
  Temperature XM 1 Chip      42 degrees C / 107 degrees F
  Temperature XM 2 TSen      42 degrees C / 107 degrees F
  Temperature XM 2 Chip      42 degrees C / 107 degrees F
  Temperature XM 3 TSen      42 degrees C / 107 degrees F
  Temperature XM 3 Chip      40 degrees C / 104 degrees F
  Temperature PCIe Switch TSen42 degrees C / 107 degrees F
  Temperature PCIe Switch Chip22 degrees C / 71 degrees F
  Power
    MPC-VDD_3V3-vt273m          3304 mV
    MPC-VDD_2V5-vt273m          2503 mV
    MPC-VDD_1V5-vt273m          1499 mV
    MPC-PCIE_0V9-vt273m          900 mV
    MPC-VDD_1V8-vt273m          1799 mV
    MPC-VDD_1V2-vt273m          1203 mV
    MPC-XM01_AVDD_1V0-vt273     1001 mV
    MPC-XM23_AVDD_1V0-vt273     1001 mV
    MPC-XM0_0V9-vt273m           900 mV
    MPC-XM1_0V9-vt273m           901 mV
    MPC-XM2_0V9-vt273m           903 mV
    MPC-XM3_0V9-vt273m           899 mV
    MPC-XL0_XR0_0V9-vt273m       899 mV
    MPC-XL0_XR1_0V9-vt273m       903 mV
    MPC-XL0_0V9-vt273m           899 mV
    MPC-XL0_AVDD_1V0-vt273m     1000 mV
    MPC-XL0_VDD_1V5-vt273m      1498 mV
    MPC-XL0_XR_1V2-vt273m       1200 mV
    MPC-XL1_XR0_0V9-vt273m       899 mV
    MPC-XL1_XR1_0V9-vt273m       899 mV
    MPC-XL1_0V9-vt273m           900 mV
    MPC-XL1_AVDD_1V0-vt273m     1000 mV
    MPC-XL1_VDD_1V5-vt273m      1501 mV
    MPC-XL1_XR_1V2-vt273m       1199 mV
    MPC-PMB-1V05-ltc2978        1049 mV
    MPC-PMB-1V5-ltc2978         1500 mV
    MPC-PMB-2V5-ltc2978         2500 mV
    MPC-PMB-3V3-ltc2978         3298 mV
  I2C Slave Revision         20
```

```
FPC 1 status:
  State                       Online
  Temperature Intake          29 degrees C / 84 degrees F
  Temperature Exhaust A       52 degrees C / 125 degrees F
  Temperature Exhaust B       44 degrees C / 111 degrees F
  Temperature EA0 TSen        55 degrees C / 131 degrees F
  Temperature EA0 Chip        48 degrees C / 118 degrees F
  Temperature EA0_XR0 TSen    55 degrees C / 131 degrees F
  Temperature EA0_XR0 Chip    57 degrees C / 134 degrees F
  Temperature EA0_XR1 TSen    55 degrees C / 131 degrees F
  Temperature EA0_XR1 Chip    54 degrees C / 129 degrees F
  Temperature EA1 TSen        55 degrees C / 131 degrees F
  Temperature EA1 Chip        50 degrees C / 122 degrees F
  Temperature EA1_XR0 TSen    55 degrees C / 131 degrees F
  Temperature EA1_XR0 Chip    59 degrees C / 138 degrees F
  Temperature EA1_XR1 TSen    55 degrees C / 131 degrees F
  Temperature EA1_XR1 Chip    59 degrees C / 138 degrees F
  Temperature PEX TSen        55 degrees C / 131 degrees F
  Temperature PEX Chip        39 degrees C / 102 degrees F
  Temperature EA2 TSen        43 degrees C / 109 degrees F
  Temperature EA2 Chip        39 degrees C / 102 degrees F
  Temperature EA2_XR0 TSen    43 degrees C / 109 degrees F
  Temperature EA2_XR0 Chip    45 degrees C / 113 degrees F
  Temperature EA2_XR1 TSen    43 degrees C / 109 degrees F
  Temperature EA2_XR1 Chip    43 degrees C / 109 degrees F
  Temperature EA3 TSen        43 degrees C / 109 degrees F
  Temperature EA3 Chip        41 degrees C / 105 degrees F
  Temperature EA3_XR0 TSen    43 degrees C / 109 degrees F
  Temperature EA3_XR0 Chip    50 degrees C / 122 degrees F
  Temperature EA3_XR1 TSen    43 degrees C / 109 degrees F
  Temperature EA3_XR1 Chip    46 degrees C / 114 degrees F
  Temperature EA0_HMC0 Logic die 61 degrees C / 141 degrees F
  Temperature EA0_HMC0 DRAM botm 58 degrees C / 136 degrees F
  Temperature EA0_HMC1 Logic die 62 degrees C / 143 degrees F
  Temperature EA0_HMC1 DRAM botm 59 degrees C / 138 degrees F
  Temperature EA0_HMC2 Logic die 59 degrees C / 138 degrees F
  Temperature EA0_HMC2 DRAM botm 56 degrees C / 132 degrees F
  Temperature EA1_HMC0 Logic die 67 degrees C / 152 degrees F
  Temperature EA1_HMC0 DRAM botm 64 degrees C / 147 degrees F
  Temperature EA1_HMC1 Logic die 65 degrees C / 149 degrees F
  Temperature EA1_HMC1 DRAM botm 62 degrees C / 143 degrees F
  Temperature EA1_HMC2 Logic die 63 degrees C / 145 degrees F
  Temperature EA1_HMC2 DRAM botm 60 degrees C / 140 degrees F
  Temperature EA2_HMC0 Logic die 51 degrees C / 123 degrees F
  Temperature EA2_HMC0 DRAM botm 48 degrees C / 118 degrees F
  Temperature EA2_HMC1 Logic die 55 degrees C / 131 degrees F
  Temperature EA2_HMC1 DRAM botm 52 degrees C / 125 degrees F
  Temperature EA2_HMC2 Logic die 52 degrees C / 125 degrees F
  Temperature EA2_HMC2 DRAM botm 49 degrees C / 120 degrees F
  Temperature EA3_HMC0 Logic die 51 degrees C / 123 degrees F
  Temperature EA3_HMC0 DRAM botm 48 degrees C / 118 degrees F
  Temperature EA3_HMC1 Logic die 52 degrees C / 125 degrees F
  Temperature EA3_HMC1 DRAM botm 49 degrees C / 120 degrees F
  Temperature EA3_HMC2 Logic die 52 degrees C / 125 degrees F
  Temperature EA3_HMC2 DRAM botm 49 degrees C / 120 degrees F
  Power
    MPC-EA0_0V9-vt1527mb         950 mV
    MPC-EA1_0V9-vt1527mb         950 mV
    MPC-EA2_0V9-vt1527mb         925 mV
    MPC-EA3_0V9-vt1527mb         924 mV
    MAX20751-1V0                1020 mV
```

```
    MAX20731-0V9                 891 mV
    MAX20751-EA0-AVDD1V0        1000 mV
    MAX20731-EA0-1V2            1189 mV
    MAX20731-EA0-HMC-1V2        1182 mV
    MAX20731-EA0-0V906           899 mV
    MAX20731-EA0-HMC-0V9         891 mV
    MAX20751-EA1-AVDD1V0        1000 mV
    MAX20731-EA1-1V2            1189 mV
    MAX20731-EA1-HMC-1V2        1182 mV
    MAX20731-EA1-0V906           899 mV
    MAX20731-EA1-HMC-0V9         889 mV
    MAX20751-EA2-AVDD1V0        1000 mV
    MAX20731-EA2-1V2            1186 mV
    MAX20731-EA2-HMC-1V2        1193 mV
    MAX20731-EA2-0V906           899 mV
    MAX20731-EA2-HMC-0V9         889 mV
    MAX20751-EA3-AVDD1V0        1000 mV
    MAX20731-EA3-1V2            1186 mV
    MAX20731-EA3-HMC-1V2        1193 mV
    MAX20731-EA3-0V906           897 mV
    MAX20731-EA3-HMC-0V9         894 mV
    MAX20731-3V3                3268 mV
    UCD9090_0-CH_1-EA0_PLL_     1010 mV
    UCD9090_0-CH_2-EA0_1V04     1038 mV
    UCD9090_0-CH_3-EA0_2V5      2499 mV
    UCD9090_0-CH_4-EA0_1V5      1494 mV
    UCD9090_0-CH_5-EA1_PLL_     1012 mV
    UCD9090_0-CH_6-EA1_1V04     1038 mV
    UCD9090_0-CH_7-EA1_2V5      2497 mV
    UCD9090_0-CH_8-EA1_1V5      1498 mV
    UCD9090_0-CH_9-VDD_1V8      1804 mV
    UCD9090_0-CH_10-VDD_2V5     2499 mV
    UCD9090_1-CH_1-EA2_PLL_     1017 mV
    UCD9090_1-CH_2-EA2_1V04     1041 mV
    UCD9090_1-CH_3-EA2_2V5      2499 mV
    UCD9090_1-CH_4-EA2_1V5      1503 mV
    UCD9090_1-CH_5-EA3_PLL_     1015 mV
    UCD9090_1-CH_6-EA3_1V04     1048 mV
    UCD9090_1-CH_7-EA3_2V5      2499 mV
    UCD9090_1-CH_8-EA3_1V5      1500 mV
    UCD9090_1-CH_9-VDD_1V5      1497 mV
    UCD9090_1-CH_10-VDD_1V2     1216 mV
    PMB PVCC 0.7V - 1.05V        802 mV
    PMB PVNN 0V - 1.02V          976 mV
    PMB 1.0V                    1002 mV
    PMB 1.1V                    1076 mV
    PMB 1.35V                   1347 mV
    PMB VDDQ 1.5V               1504 mV
    PMB 1.8V                    1804 mV
    PMB VDD 3.3V                3292 mV
    PMB BIAS 5.0V               5008 mV
    PMB USB 5.0V                5000 mV
    PMB 12V                    10866 mV
  I2C Slave Revision         112
FPC 7 status:
  State                      Online
  Temperature Intake         31 degrees C / 87 degrees F
  Temperature Exhaust A      46 degrees C / 114 degrees F
  Temperature Exhaust B      38 degrees C / 100 degrees F
  Temperature QX 0 TSen      49 degrees C / 120 degrees F
  Temperature QX 0 Chip      52 degrees C / 125 degrees F
```

```
  Temperature LU 0 TCAM TSen 49 degrees C / 120 degrees F
  Temperature LU 0 TCAM Chip 52 degrees C / 125 degrees F
  Temperature LU 0 TSen      49 degrees C / 120 degrees F
  Temperature LU 0 Chip      51 degrees C / 123 degrees F
  Temperature MQ 0 TSen      49 degrees C / 120 degrees F
  Temperature MQ 0 Chip      55 degrees C / 131 degrees F
  Temperature QX 1 TSen      41 degrees C / 105 degrees F
  Temperature QX 1 Chip      42 degrees C / 107 degrees F
  Temperature LU 1 TCAM TSen 41 degrees C / 105 degrees F
  Temperature LU 1 TCAM Chip 43 degrees C / 109 degrees F
  Temperature LU 1 TSen      41 degrees C / 105 degrees F
  Temperature LU 1 Chip      46 degrees C / 114 degrees F
  Temperature MQ 1 TSen      41 degrees C / 105 degrees F
  Temperature MQ 1 Chip      47 degrees C / 116 degrees F
  Power
    MPC-BIAS3V3-zl2105          3302 mV
    MPC-VDD3V3-zl2006           3307 mV
    MPC-VDD2V5-zl2006           2505 mV
    MPC-TCAM_1V0-zl2004         1000 mV
    MPC-AVDD1V0-zl2006          1006 mV
    MPC-VDD1V8-zl2006           1800 mV
    MPC-PCIE_1V0-zl2006         1000 mV
    MPC-LU0_1V0-zl2004           997 mV
    MPC-MQ0_1V0-zl2004           999 mV
    MPC-VDD_1V5-zl2004          1495 mV
    MPC-PMB_1V1-zl2006          1096 mV
    MPC-9VA-BMR453              9051 mV
    MPC-9VB-BMR453              8990 mV
    MPC-PMB_1V2-zl2106          1200 mV
    MPC-LU1_1V0-zl2004           997 mV
    MPC-MQ1_1V0-zl2004           998 mV
    MPC-QXM0_1V0-zl2006         1000 mV
    MPC-QXM1_1V0-zl2006          999 mV
  I2C Slave Revision         70
```

show chassis environment fpc (MX240 Router)

```
user@host> show chassis environment fpc
FPC 1 status:
  State                      Online
  Temperature Intake         34 degrees C / 93 degrees F
  Temperature Exhaust A      39 degrees C / 102 degrees F
  Temperature Exhaust B      53 degrees C / 127 degrees F
  Temperature I3 0 TSensor   51 degrees C / 123 degrees F
  Temperature I3 0 Chip      54 degrees C / 129 degrees F
  Temperature I3 1 TSensor   50 degrees C / 122 degrees F
  Temperature I3 1 Chip      53 degrees C / 127 degrees F
  Temperature I3 2 TSensor   48 degrees C / 118 degrees F
  Temperature I3 2 Chip      51 degrees C / 123 degrees F
  Temperature I3 3 TSensor   45 degrees C / 113 degrees F
  Temperature I3 3 Chip      48 degrees C / 118 degrees F
  Temperature IA 0 TSensor   45 degrees C / 113 degrees F
  Temperature IA 0 Chip      45 degrees C / 113 degrees F
  Temperature IA 1 TSensor   45 degrees C / 113 degrees F
  Temperature IA 1 Chip      49 degrees C / 120 degrees F
  Power
    1.5 V                     1492 mV
    2.5 V                     2507 mV
    3.3 V                     3306 mV
    1.8 V PFE 0               1801 mV
    1.8 V PFE 1               1804 mV
```

```
    1.8 V PFE 2               1798 mV
    1.8 V PFE 3               1798 mV
    1.2 V PFE 0               1169 mV
    1.2 V PFE 1               1189 mV
    1.2 V PFE 2               1182 mV
    1.2 V PFE 3               1176 mV
  I2C Slave Revision         42
FPC 2 status:
  State                      Online
  Temperature Intake         33 degrees C / 91 degrees F
  Temperature Exhaust A      41 degrees C / 105 degrees F
  Temperature Exhaust B      53 degrees C / 127 degrees F
  Temperature I3 0 TSensor   53 degrees C / 127 degrees F
  Temperature I3 0 Chip      58 degrees C / 136 degrees F
  Temperature I3 1 TSensor   52 degrees C / 125 degrees F
  Temperature I3 1 Chip      56 degrees C / 132 degrees F
  Temperature I3 2 TSensor   50 degrees C / 122 degrees F
  Temperature I3 2 Chip      52 degrees C / 125 degrees F
  Temperature I3 3 TSensor   46 degrees C / 114 degrees F
  Temperature I3 3 Chip      49 degrees C / 120 degrees F
  Temperature IA 0 TSensor   51 degrees C / 123 degrees F
  Temperature IA 0 Chip      49 degrees C / 120 degrees F
  Temperature IA 1 TSensor   48 degrees C / 118 degrees F
  Temperature IA 1 Chip      53 degrees C / 127 degrees F
  Power
    1.5 V                     1492 mV
    2.5 V                     2445 mV
    3.3 V                     3293 mV
    1.8 V PFE 0               1827 mV
    1.8 V PFE 1               1775 mV
    1.8 V PFE 2               1788 mV
    1.8 V PFE 3               1798 mV
    1.2 V PFE 0               1250 mV
    1.2 V PFE 1               1234 mV
    1.2 V PFE 2               1231 mV
    1.2 V PFE 3               1192 mV
  I2C Slave Revision         42
```

show chassis environment fpc (MX480 Router)

```
user@host> show chassis environment fpc
FPC 1 status:
  State                      Online
  Temperature Intake         36 degrees C / 96 degrees F
  Temperature Exhaust A      41 degrees C / 105 degrees F
  Temperature Exhaust B      55 degrees C / 131 degrees F
  Temperature I3 0 TSensor   55 degrees C / 131 degrees F
  Temperature I3 0 Chip      57 degrees C / 134 degrees F
  Temperature I3 1 TSensor   53 degrees C / 127 degrees F
  Temperature I3 1 Chip      53 degrees C / 127 degrees F
  Temperature I3 2 TSensor   52 degrees C / 125 degrees F
  Temperature I3 2 Chip      49 degrees C / 120 degrees F
  Temperature I3 3 TSensor   47 degrees C / 116 degrees F
  Temperature I3 3 Chip      47 degrees C / 116 degrees F
  Temperature IA 0 TSensor   54 degrees C / 129 degrees F
  Temperature IA 0 Chip      58 degrees C / 136 degrees F
  Temperature IA 1 TSensor   48 degrees C / 118 degrees F
  Temperature IA 1 Chip      53 degrees C / 127 degrees F
  Power
    1.5 V                     1479 mV
    2.5 V                     2542 mV
```

```
    3.3 V                      3319 mV
    1.8 V PFE 0                1811 mV
    1.8 V PFE 1                1804 mV
    1.8 V PFE 2                1804 mV
    1.8 V PFE 3                1814 mV
    1.2 V PFE 0                1192 mV
    1.2 V PFE 1                1202 mV
    1.2 V PFE 2                1205 mV
    1.2 V PFE 3                1189 mV
  I2C Slave Revision         40
```

show chassis environment fpc (MX960 Router)

```
user@host> show chassis environment fpc
FPC 5 status:
  State                      Online
  Temperature Intake         27 degrees C / 80 degrees F
  Temperature Exhaust A      34 degrees C / 93 degrees F
  Temperature Exhaust B      40 degrees C / 104 degrees F
  Temperature I3 0 TSensor   39 degrees C / 102 degrees F
  Temperature I3 0 Chip      41 degrees C / 105 degrees F
  Temperature I3 1 TSensor   38 degrees C / 100 degrees F
  Temperature I3 1 Chip      37 degrees C / 98 degrees F
  Temperature I3 2 TSensor   37 degrees C / 98 degrees F
  Temperature I3 2 Chip      34 degrees C / 93 degrees F
  Temperature I3 3 TSensor   32 degrees C / 89 degrees F
  Temperature I3 3 Chip      33 degrees C / 91 degrees F
  Temperature IA 0 TSensor   39 degrees C / 102 degrees F
  Temperature IA 0 Chip      44 degrees C / 111 degrees F
  Temperature IA 1 TSensor   36 degrees C / 96 degrees F
  Temperature IA 1 Chip      44 degrees C / 111 degrees F
  Power
    1.5 V                      1479 mV
    2.5 V                      2523 mV
    3.3 V                      3254 mV
    1.8 V PFE 0                1798 mV
    1.8 V PFE 1                1798 mV
    1.8 V PFE 2                1807 mV
    1.8 V PFE 3                1791 mV
    1.2 V PFE 0                1173 mV
    1.2 V PFE 1                1179 mV
    1.2 V PFE 2                1179 mV
    1.2 V PFE 3                1185 mV
  I2C Slave Revision         6
FPC 6 status:
  State                      Online
  Temperature Intake         25 degrees C / 77 degrees F
  Temperature Exhaust A      38 degrees C / 100 degrees F
  Temperature Exhaust B      38 degrees C / 100 degrees F
  Temperature I3 0 TSensor   40 degrees C / 104 degrees F
  Temperature I3 0 Chip      40 degrees C / 104 degrees F
  Temperature I3 1 TSensor   40 degrees C / 104 degrees F
  Temperature I3 1 Chip      38 degrees C / 100 degrees F
  Temperature I3 2 TSensor   37 degrees C / 98 degrees F
  Temperature I3 2 Chip      32 degrees C / 89 degrees F
  Temperature I3 3 TSensor   34 degrees C / 93 degrees F
  Temperature I3 3 Chip      33 degrees C / 91 degrees F
  Temperature IA 0 TSensor   45 degrees C / 113 degrees F
  Temperature IA 0 Chip      47 degrees C / 116 degrees F
  Temperature IA 1 TSensor   37 degrees C / 98 degrees F
  Temperature IA 1 Chip      42 degrees C / 107 degrees F
```

```
  Power
    1.5 V                      1485 mV
    2.5 V                      2510 mV
    3.3 V                      3332 mV
    1.8 V PFE 0                1801 mV
    1.8 V PFE 1                1814 mV
    1.8 V PFE 2                1804 mV
    1.8 V PFE 3                1820 mV
    1.2 V PFE 0                1192 mV
    1.2 V PFE 1                1189 mV
    1.2 V PFE 2                1202 mV
    1.2 V PFE 3                1156 mV
  I2C Slave Revision         40
```

show chassis environment fpc (MX480 Router with 100-Gigabit Ethernet CFP)

```
user@host> show chassis environment fpc
FPC 0 status:
  State                      Online
  Temperature Intake         32 degrees C / 89 degrees F
  Temperature Exhaust A      39 degrees C / 102 degrees F
  Temperature Exhaust B      37 degrees C / 98 degrees F
  Temperature QX 0 TSen      44 degrees C / 111 degrees F
  Temperature QX 0 Chip      48 degrees C / 118 degrees F
  Temperature LU 0 TCAM TSen 44 degrees C / 111 degrees F
  Temperature LU 0 TCAM Chip 47 degrees C / 116 degrees F
  Temperature LU 0 TSen      44 degrees C / 111 degrees F
  Temperature LU 0 Chip      48 degrees C / 118 degrees F
  Temperature MQ 0 TSen      44 degrees C / 111 degrees F
  Temperature MQ 0 Chip      47 degrees C / 116 degrees F
  Power
    MPC-BIAS3V3-zl2105        3297 mV
    MPC-VDD3V3-zl2105         3306 mV
    MPC-VDD2V5-zl2105         2498 mV
    MPC-TCAM_1V0-zl2004        999 mV
    MPC-AVDD1V0-zl2006         999 mV
    MPC-VDD1V8-zl2006         1796 mV
    MPC-PCIE_1V0-zl2006       1002 mV
    MPC-LU0_1V0-zl2004         997 mV
    MPC-MQ0_1V0-zl2004         995 mV
    MPC-VDD_1V5-zl2004        1496 mV
    MPC-PMB_1V1-zl2006        1094 mV
    MPC-9VA-BMR453            9054 mV
    MPC-9VB-BMR453            9037 mV
    MPC-PMB_1V2-zl2106        1191 mV
    MPC-QXM0_1V0-zl2006       1000 mV
  I2C Slave Revision         66
FPC 1 status:
  State                      Online
  Temperature Intake         35 degrees C / 95 degrees F
  Temperature Exhaust A      50 degrees C / 122 degrees F
  Temperature Exhaust B      56 degrees C / 132 degrees F
  Temperature LU 0 TSen      46 degrees C / 114 degrees F
  Temperature LU 0 Chip      59 degrees C / 138 degrees F
  Temperature LU 1 TSen      46 degrees C / 114 degrees F
  Temperature LU 1 Chip      45 degrees C / 113 degrees F
  Temperature LU 2 TSen      46 degrees C / 114 degrees F
  Temperature LU 2 Chip      60 degrees C / 140 degrees F
  Temperature LU 3 TSen      46 degrees C / 114 degrees F
  Temperature LU 3 Chip      71 degrees C / 159 degrees F
  Temperature XM 0 TSen      46 degrees C / 114 degrees F
```



```
  Temperature XM 0 Chip      -18 degrees C / 0 degrees F
  Temperature XF 0 TSen      46 degrees C / 114 degrees F
  Temperature XF 0 Chip      76 degrees C / 168 degrees F
  Power
    MPC-BIAS3V3-zl2105        3292 mV
    MPC-VDD3V3-zl6100         3303 mV
    MPC-VDD2V5-zl6100         2501 mV
    MPC-VDD1V8-zl2004         1801 mV
    MPC-AVDD1V0-zl2006         996 mV
    MPC-VDD1V2-zl6100         1199 mV
    MPC-VDD1V5A-zl2004        1493 mV
    MPC-VDD1V5B-zl2004        1498 mV
    MPC-XF_0V9-zl2006          996 mV
    MPC-PCIE_1V0-zl6100       1000 mV
    MPC-LU0_1V0-zl2004         994 mV
    MPC-LU1_1V0-zl2004         994 mV
    MPC-LU2_1V0-zl2004         992 mV
    MPC-LU3_1V0-zl2004         993 mV
    MPC-12VA-BMR453          12003 mV
    MPC-12VB-BMR453          12043 mV
    MPC-PMB_1V1-zl2006        1091 mV
    MPC-PMB_1V2-zl2106        1196 mV
    MPC-XM_0V9-vt273m          899 mV
  I2C Slave Revision         106
```

show chassis environment fpc (MX240, MX480, MX960 with Application Services Modular Line Card

```
user@host>show chassis environment fpc 1
FPC 1 status:
  State                      Online
  Temperature Intake         36 degrees C / 96 degrees F
  Temperature Exhaust A      39 degrees C / 102 degrees F
  Temperature LU TSen        52 degrees C / 125 degrees F
  Temperature LU Chip        54 degrees C / 129 degrees F
  Temperature XM TSen        52 degrees C / 125 degrees F
  Temperature XM Chip        60 degrees C / 140 degrees F
  Temperature PCIe TSen      52 degrees C / 125 degrees F
  Temperature PCIe Chip      69 degrees C / 156 degrees F
  Power
    MPC-BIAS3V3-zl2106        3302 mV
    MPC-VDD3V3-zl6100         3325 mV
    MPC-AVDD1V0-zl6100        1007 mV
    MPC-PCIE_1V0-zl6100        904 mV
    MPC-LU0_1V0-zl2004         996 mV
    MPC-VDD_1V5-zl2004        1498 mV
    MPC-12VA-BMR453          11733 mV
    MPC-12VB-BMR453          11728 mV
    MPC-XM_0V9-vt273m          900 mV
  I2C Slave Revision         81
```

show chassis environment fpc (MX10003 Router)

```
user@host> show chassis environment fpc

FPC 0 status:
  State                      Online
  FPC 0 Intake Temp Sensor   29 degrees C / 84 degrees F
  FPC 0 Exhaust-A Temp Sensor56 degrees C / 132 degrees F
  FPC 0 Exhaust-B Temp Sensor44 degrees C / 111 degrees F
  FPC 0 EA0 Chip             58 degrees C / 136 degrees F
```

```
FPC 0 EA0-XR0 Chip         61 degrees C / 141 degrees F
FPC 0 EA0-XR1 Chip         62 degrees C / 143 degrees F
FPC 0 EA1 Chip             67 degrees C / 152 degrees F
FPC 0 EA1-XR0 Chip         72 degrees C / 161 degrees F
FPC 0 EA1-XR1 Chip         72 degrees C / 161 degrees F
FPC 0 PEX Chip             77 degrees C / 170 degrees F
FPC 0 EA2 Chip             48 degrees C / 118 degrees F
FPC 0 EA2-XR0 Chip         54 degrees C / 129 degrees F
FPC 0 EA2-XR1 Chip         56 degrees C / 132 degrees F
FPC 0 PF Chip              68 degrees C / 154 degrees F
FPC 0 EA0_HMC0 Logic die   72 degrees C / 161 degrees F
FPC 0 EA0_HMC0 DRAM botm   69 degrees C / 156 degrees F
FPC 0 EA0_HMC1 Logic die   71 degrees C / 159 degrees F
FPC 0 EA0_HMC1 DRAM botm   68 degrees C / 154 degrees F
FPC 0 EA0_HMC2 Logic die   75 degrees C / 167 degrees F
FPC 0 EA0_HMC2 DRAM botm   72 degrees C / 161 degrees F
FPC 0 EA1_HMC0 Logic die   81 degrees C / 177 degrees F
FPC 0 EA1_HMC0 DRAM botm   78 degrees C / 172 degrees F
FPC 0 EA1_HMC1 Logic die   80 degrees C / 176 degrees F
FPC 0 EA1_HMC1 DRAM botm   77 degrees C / 170 degrees F
FPC 0 EA1_HMC2 Logic die   82 degrees C / 179 degrees F
FPC 0 EA1_HMC2 DRAM botm   79 degrees C / 174 degrees F
FPC 0 EA2_HMC0 Logic die   60 degrees C / 140 degrees F
FPC 0 EA2_HMC0 DRAM botm   57 degrees C / 134 degrees F
FPC 0 EA2_HMC1 Logic die   61 degrees C / 141 degrees F
FPC 0 EA2_HMC1 DRAM botm   58 degrees C / 136 degrees F
FPC 0 EA2_HMC2 Logic die   63 degrees C / 145 degrees F
FPC 0 EA2_HMC2 DRAM botm   60 degrees C / 140 degrees F
Power
  LTC3887-PF-VDD0V9-RAIL       898 mV
  LTC3887-PF-VDD0V9-DEV0-      898 mV
  LTC3887-PF-VDD0V9-DEV0-      900 mV
  LTC3887-PF-VDD0V9-DEV1-      899 mV
  LTC3887-PF-VDD0V9-DEV1-      901 mV
  LTC3887-PF-AVDD1V0-RAIL      998 mV
  LTC3887-PF-AVDD1V0-CH0       998 mV
  LTC3887-PF-AVDD1V0-CH1       999 mV
  LTC3887-ETHSW-VDD1V0        1000 mV
  LTC3887-VDD2V5              2499 mV
  LTC3887-PCIE-VDD0V9          899 mV
  LTC3887-V1P0                 999 mV
  LTC3887-PHY-VDD1V0-A         999 mV
  LTC3887-3V3                 3300 mV
  LTC3887-VDD1V8              1799 mV
  UCD9090_0-CH_1-EA0_PLL_     1005 mV
  UCD9090_0-CH_2-EA0_1V4      1049 mV
  UCD9090_0-CH_3-EA0_2V5      2499 mV
  UCD9090_0-CH_4-EA0_1V5      1499 mV
  UCD9090_0-CH_5-EA1_PLL_      999 mV
  UCD9090_0-CH_6-EA1_1V4      1037 mV
  UCD9090_0-CH_7-EA1_2V5      2499 mV
  UCD9090_0-CH_8-EA1_1V5      1510 mV
  UCD9090_0-CH_9-PVCC          797 mV
  UCD9090_0-CH_10-PVNN         991 mV
  UCD9090_1-CH_1-EA2_PLL_     1008 mV
  UCD9090_1-CH_2-EA2_1V4      1009 mV
  UCD9090_1-CH_3-EA2_2V5      2499 mV
  UCD9090_1-CH_4-EA2_1V5      1513 mV
  UCD9090_1-CH_5-1V0_PFPL     1009 mV
  UCD9090_1-CH_6-V1P1         1075 mV
  UCD9090_1-CH_7-V1P5         1531 mV
```

```
    UCD9090_1-CH_8-V1P35        1359 mV
    UCD9090_1-CH_9-VDD1V5       1511 mV
    UCD9090_1-CH_10-VDD1V2      1210 mV
    LTC3887-EA0-VDD0V9-RAIL      949 mV
    LTC3887-EA0-VDD0V9-DEV0      949 mV
    LTC3887-EA0-VDD0V9-DEV0      951 mV
    LTC3887-EA0-VDD0V9-DEV1      949 mV
    LTC3887-EA0-VDD0V9-DEV1      951 mV
    LTC3887-EA0-VDD0V9R2-RA      947 mV
    LTC3887-EA0-VDD0V9R2-CH      947 mV
    LTC3887-EA0-VDD0V9R2-CH      949 mV
    LTC3887-EA0-VDD1V0-RAIL      999 mV
    LTC3887-EA0-VDD1V0-CH0       999 mV
    LTC3887-EA0-VDD1V0-CH1      1001 mV
    LTC3887-EA0-XR-VDD0V9        900 mV
    LTC3887-EA0-XR-VDD1V2       1199 mV
    LTC3887-EA0-HM1-VDD0V9       899 mV
    LTC3887-EA0-HM-VDD1V2       1200 mV
    LTC3887-EA0-HM-VDDM1V2      1199 mV
    LTC3887-EA1-VDD0V9-RAIL      949 mV
    LTC3887-EA1-VDD0V9-DEV0      952 mV
    LTC3887-EA1-VDD0V9-DEV0      952 mV
    LTC3887-EA1-VDD0V9-DEV1      951 mV
    LTC3887-EA1-VDD0V9-DEV1      951 mV
    LTC3887-EA1-VDD0V9R2-RA      948 mV
    LTC3887-EA1-VDD0V9R2-CH      948 mV
    LTC3887-EA1-VDD0V9R2-CH      950 mV
    LTC3887-EA1-VDD1V0-RAIL     1000 mV
    LTC3887-EA1-VDD1V0-CH0      1000 mV
    LTC3887-EA1-VDD1V0-CH1      1001 mV
  I2C Slave Revision         13
FPC 1 status:
  State                      Online
  FPC 1 Intake Temp Sensor   27 degrees C / 80 degrees F
  FPC 1 Exhaust-A Temp Sensor60 degrees C / 140 degrees F
  FPC 1 Exhaust-B Temp Sensor46 degrees C / 114 degrees F
  FPC 1 EA0 Chip             63 degrees C / 145 degrees F
  FPC 1 EA0-XR0 Chip         67 degrees C / 152 degrees F
  FPC 1 EA0-XR1 Chip         68 degrees C / 154 degrees F
  FPC 1 EA1 Chip             70 degrees C / 158 degrees F
  FPC 1 EA1-XR0 Chip         75 degrees C / 167 degrees F
  FPC 1 EA1-XR1 Chip         75 degrees C / 167 degrees F
  FPC 1 PEX Chip             89 degrees C / 192 degrees F
  FPC 1 EA2 Chip             49 degrees C / 120 degrees F
  FPC 1 EA2-XR0 Chip         53 degrees C / 127 degrees F
  FPC 1 EA2-XR1 Chip         56 degrees C / 132 degrees F
  FPC 1 PF Chip              71 degrees C / 159 degrees F
  FPC 1 EA0_HMC0 Logic die   74 degrees C / 165 degrees F
  FPC 1 EA0_HMC0 DRAM botm   71 degrees C / 159 degrees F
  FPC 1 EA0_HMC1 Logic die   78 degrees C / 172 degrees F
  FPC 1 EA0_HMC1 DRAM botm   75 degrees C / 167 degrees F
  FPC 1 EA0_HMC2 Logic die   78 degrees C / 172 degrees F
  FPC 1 EA0_HMC2 DRAM botm   75 degrees C / 167 degrees F
  FPC 1 EA1_HMC0 Logic die   84 degrees C / 183 degrees F
  FPC 1 EA1_HMC0 DRAM botm   81 degrees C / 177 degrees F
  FPC 1 EA1_HMC1 Logic die   82 degrees C / 179 degrees F
  FPC 1 EA1_HMC1 DRAM botm   79 degrees C / 174 degrees F
  FPC 1 EA1_HMC2 Logic die   85 degrees C / 185 degrees F
  FPC 1 EA1_HMC2 DRAM botm   82 degrees C / 179 degrees F
  FPC 1 EA2_HMC0 Logic die   62 degrees C / 143 degrees F
  FPC 1 EA2_HMC0 DRAM botm   59 degrees C / 138 degrees F
```

```
FPC 1 EA2_HMC1 Logic die   60 degrees C / 140 degrees F
FPC 1 EA2_HMC1 DRAM botm   57 degrees C / 134 degrees F
FPC 1 EA2_HMC2 Logic die   65 degrees C / 149 degrees F
FPC 1 EA2_HMC2 DRAM botm   62 degrees C / 143 degrees F
Power
  LTC3887-PF-VDD0V9-RAIL       899 mV
  LTC3887-PF-VDD0V9-DEV0-      899 mV
  LTC3887-PF-VDD0V9-DEV0-      901 mV
  LTC3887-PF-VDD0V9-DEV1-      899 mV
  LTC3887-PF-VDD0V9-DEV1-      901 mV
  LTC3887-PF-AVDD1V0-RAIL      998 mV
  LTC3887-PF-AVDD1V0-CH0       998 mV
  LTC3887-PF-AVDD1V0-CH1       999 mV
  LTC3887-ETHSW-VDD1V0         999 mV
  LTC3887-VDD2V5              2499 mV
  LTC3887-PCIE-VDD0V9          900 mV
  LTC3887-V1P0                1000 mV
  LTC3887-PHY-VDD1V0-A        1000 mV
  LTC3887-3V3                 3300 mV
  LTC3887-VDD1V8              1799 mV
  UCD9090_0-CH_1-EA0_PLL_     1004 mV
  UCD9090_0-CH_2-EA0_1V4      1004 mV
  UCD9090_0-CH_3-EA0_2V5      2499 mV
  UCD9090_0-CH_4-EA0_1V5      1511 mV
  UCD9090_0-CH_5-EA1_PLL_      999 mV
  UCD9090_0-CH_6-EA1_1V4      1008 mV
  UCD9090_0-CH_7-EA1_2V5      2499 mV
  UCD9090_0-CH_8-EA1_1V5      1510 mV
  UCD9090_0-CH_9-PVCC          839 mV
  UCD9090_0-CH_10-PVNN        1016 mV
  UCD9090_1-CH_1-EA2_PLL_     1011 mV
  UCD9090_1-CH_2-EA2_1V4      1046 mV
  UCD9090_1-CH_3-EA2_2V5      2499 mV
  UCD9090_1-CH_4-EA2_1V5      1501 mV
  UCD9090_1-CH_5-1V0_PFPL     1000 mV
  UCD9090_1-CH_6-V1P1         1037 mV
  UCD9090_1-CH_7-V1P5         1530 mV
  UCD9090_1-CH_8-V1P35        1360 mV
  UCD9090_1-CH_9-VDD1V5       1513 mV
  UCD9090_1-CH_10-VDD1V2      1217 mV
  LTC3887-EA0-VDD0V9-RAIL      949 mV
  LTC3887-EA0-VDD0V9-DEV0      949 mV
  LTC3887-EA0-VDD0V9-DEV0      951 mV
  LTC3887-EA0-VDD0V9-DEV1      949 mV
  LTC3887-EA0-VDD0V9-DEV1      952 mV
  LTC3887-EA0-VDD0V9R2-RA      947 mV
  LTC3887-EA0-VDD0V9R2-CH      947 mV
  LTC3887-EA0-VDD0V9R2-CH      949 mV
  LTC3887-EA0-VDD1V0-RAIL     1000 mV
  LTC3887-EA0-VDD1V0-CH0      1000 mV
  LTC3887-EA0-VDD1V0-CH1      1001 mV
  LTC3887-EA0-XR-VDD0V9        899 mV
  LTC3887-EA0-XR-VDD1V2       1200 mV
  LTC3887-EA0-HM1-VDD0V9       899 mV
  LTC3887-EA0-HM-VDD1V2       1199 mV
  LTC3887-EA0-HM-VDDM1V2      1199 mV
  LTC3887-EA1-VDD0V9-RAIL      948 mV
  LTC3887-EA1-VDD0V9-DEV0      950 mV
  LTC3887-EA1-VDD0V9-DEV0      950 mV
  LTC3887-EA1-VDD0V9-DEV1      951 mV
  LTC3887-EA1-VDD0V9-DEV1      951 mV
```

```
    LTC3887-EA1-VDD0V9R2-RA      947 mV
    LTC3887-EA1-VDD0V9R2-CH      947 mV
    LTC3887-EA1-VDD0V9R2-CH      949 mV
    LTC3887-EA1-VDD1V0-RAIL     1000 mV
    LTC3887-EA1-VDD1V0-CH0      1000 mV
    LTC3887-EA1-VDD1V0-CH1      1002 mV
  I2C Slave Revision         99
```

show chassis environment fpc (MX204 Router)

```
user@host> show chassis environment fpc

FPC 0 status:
  State                      Online
  FPC 0 EA0_HMC0 Logic die   77 degrees C / 170 degrees F
  FPC 0 EA0_HMC0 DRAM botm   74 degrees C / 165 degrees F
  FPC 0 EA0_HMC1 Logic die   80 degrees C / 176 degrees F
  FPC 0 EA0_HMC1 DRAM botm   77 degrees C / 170 degrees F
  FPC 0 EA0 Chip             93 degrees C / 199 degrees F
  FPC 0 EA0-XR0 Chip         63 degrees C / 145 degrees F
  FPC 0 EA0-XR1 Chip         64 degrees C / 147 degrees F
  Power
  I2C Slave Revision         0
```

show chassis environment fpc (MX10008 Router)

```
user@host> show chassis environment fpc
FPC 0 status:
  State                      Online
  FPC 0 Intake-A Temp Sensor              32 degrees C / 89 degrees F
  FPC 0 Exhaust-A Temp Sensor             44 degrees C / 111 degrees F
  FPC 0 Exhaust-B Temp Sensor             50 degrees C / 122 degrees F
  FPC 0 EA0 Temp Sensor                   67 degrees C / 152 degrees F
  FPC 0 EA0_XR0 Temp Sensor               69 degrees C / 156 degrees F
  FPC 0 EA0_XR1 Temp Sensor               73 degrees C / 163 degrees F
  FPC 0 EA1 Temp Sensor                   61 degrees C / 141 degrees F
  FPC 0 EA1_XR0 Temp Sensor               65 degrees C / 149 degrees F
  FPC 0 EA1_XR1 Temp Sensor               63 degrees C / 145 degrees F
  FPC 0 EA2 Temp Sensor                   69 degrees C / 156 degrees F
  FPC 0 EA2_XR0 Temp Sensor               73 degrees C / 163 degrees F
  FPC 0 EA2_XR1 Temp Sensor               72 degrees C / 161 degrees F
  FPC 0 EA3 Temp Sensor                   64 degrees C / 147 degrees F
  FPC 0 EA3_XR0 Temp Sensor               66 degrees C / 150 degrees F
  FPC 0 EA3_XR1 Temp Sensor               66 degrees C / 150 degrees F
  FPC 0 EA4 Temp Sensor                   70 degrees C / 158 degrees F
  FPC 0 EA4_XR0 Temp Sensor               72 degrees C / 161 degrees F
  FPC 0 EA4_XR1 Temp Sensor               72 degrees C / 161 degrees F
  FPC 0 EA5 Temp Sensor                   58 degrees C / 136 degrees F
  FPC 0 EA5_XR0 Temp Sensor               61 degrees C / 141 degrees F
  FPC 0 EA5_XR1 Temp Sensor               64 degrees C / 147 degrees F
  FPC 0 EA0_HMC0 Logic die                75 degrees C / 167 degrees F
  FPC 0 EA0_HMC0 DRAM botm                72 degrees C / 161 degrees F
  FPC 0 EA0_HMC1 Logic die                76 degrees C / 168 degrees F
  FPC 0 EA0_HMC1 DRAM botm                73 degrees C / 163 degrees F
  FPC 0 EA0_HMC2 Logic die                77 degrees C / 170 degrees F
  FPC 0 EA0_HMC2 DRAM botm                74 degrees C / 165 degrees F
  FPC 0 EA1_HMC0 Logic die                72 degrees C / 161 degrees F
  FPC 0 EA1_HMC0 DRAM botm                69 degrees C / 156 degrees F
  FPC 0 EA1_HMC1 Logic die                73 degrees C / 163 degrees F
```

```
FPC 0 EA1_HMC1 DRAM botm                70 degrees C / 158 degrees F
FPC 0 EA1_HMC2 Logic die                72 degrees C / 161 degrees F
FPC 0 EA1_HMC2 DRAM botm                69 degrees C / 156 degrees F
FPC 0 EA2_HMC0 Logic die                80 degrees C / 176 degrees F
FPC 0 EA2_HMC0 DRAM botm                77 degrees C / 170 degrees F
FPC 0 EA2_HMC1 Logic die                81 degrees C / 177 degrees F
FPC 0 EA2_HMC1 DRAM botm                78 degrees C / 172 degrees F
FPC 0 EA2_HMC2 Logic die                80 degrees C / 176 degrees F
FPC 0 EA2_HMC2 DRAM botm                77 degrees C / 170 degrees F
FPC 0 EA3_HMC0 Logic die                77 degrees C / 170 degrees F
FPC 0 EA3_HMC0 DRAM botm                74 degrees C / 165 degrees F
FPC 0 EA3_HMC1 Logic die                78 degrees C / 172 degrees F
FPC 0 EA3_HMC1 DRAM botm                75 degrees C / 167 degrees F
FPC 0 EA3_HMC2 Logic die                77 degrees C / 170 degrees F
FPC 0 EA3_HMC2 DRAM botm                74 degrees C / 165 degrees F
FPC 0 EA4_HMC0 Logic die                80 degrees C / 176 degrees F
FPC 0 EA4_HMC0 DRAM botm                77 degrees C / 170 degrees F
FPC 0 EA4_HMC1 Logic die                81 degrees C / 177 degrees F
FPC 0 EA4_HMC1 DRAM botm                78 degrees C / 172 degrees F
FPC 0 EA4_HMC2 Logic die                80 degrees C / 176 degrees F
FPC 0 EA4_HMC2 DRAM botm                77 degrees C / 170 degrees F
FPC 0 EA5_HMC0 Logic die                69 degrees C / 156 degrees F
FPC 0 EA5_HMC0 DRAM botm                66 degrees C / 150 degrees F
FPC 0 EA5_HMC1 Logic die                68 degrees C / 154 degrees F
FPC 0 EA5_HMC1 DRAM botm                65 degrees C / 149 degrees F
FPC 0 EA5_HMC2 Logic die                68 degrees C / 154 degrees F
FPC 0 EA5_HMC2 DRAM botm                65 degrees C / 149 degrees F
Power
       12V SS 1                  12259 mV    9841 mA  120642 mW
       12V SS 2                  12259 mV   21054 mA  258104 mW
       12V SS 3                  12285 mV    9841 mA  120902 mW
       12V SS 4                  12232 mV   20968 mA  256496 mW
       12V SS 5                  12179 mV   14993 mA  182614 mW
       VDD 1.0V_A                 1000 mV   95375 mA   95375 mW
       VDD 1.0V_B                    0 mV       0 mA       0 mW
       VDD 3.3V                   3298 mV   12500 mA   41235 mW
       VDD 0.9V                    894 mV    3569 mA    3192 mW
       ETH SW 1V                   980 mV    4500 mA    4410 mW
       VDD 1.8V                   1809 mV     895 mA    1619 mW
       PVCC                        951 mV       0 mA       0 mW
       PVNN                       1009 mV       0 mA       0 mW
       V1P0                       1006 mV       0 mA       0 mW
       V1P1                       1070 mV       0 mA       0 mW
       V1P3                       1351 mV       0 mA       0 mW
       VDDQ                       1500 mV       0 mA       0 mW
       V1P8                       1816 mV       0 mA       0 mW
       VDD3V3                     3296 mV       0 mA       0 mW
       V5V0_BIAS                  5025 mV       0 mA       0 mW
       VDD12V0                   12174 mV       0 mA       0 mW
       EA0 Core 0.9V               900 mV   40625 mA   36578 mW
       EA0 AVDD 1.0V              1000 mV   32500 mA   32500 mW
       EA0 HMC Core 0.9V           894 mV   10081 mA    9017 mW
       EA0 1.2V                   1189 mV   15081 mA   17945 mW
       EA01_HMC_VDDM 1.2V         1193 mV    -151 mA    -180 mW
       EA0_XR 0.906V               905 mV   13802 mA   12496 mW
       EA1 Core 0.9V               900 mV   41000 mA   36916 mW
       EA1 AVDD 1.0V              1000 mV   28000 mA   28000 mW
       EA1 HMC Core 0.9V           897 mV    9848 mA    8835 mW
       EA1 1.2V                   1197 mV   15313 mA   18332 mW
       EA0_PLL_1V0                1003 mV       0 mA       0 mW
       EA0_1V04                   1032 mV       0 mA       0 mW
```

```
          EA0_2V5                     2445 mV       0 mA       0 mW
          EA0_1V5                     1512 mV       0 mA       0 mW
          EA1_PLL_1V0                 1000 mV       0 mA       0 mW
          EA1_1V04                    1051 mV       0 mA       0 mW
          EA1_2V5                     2516 mV       0 mA       0 mW
          EA1_1V5                     1503 mV       0 mA       0 mW
          EA1_XR 0.906V                908 mV   14151 mA   12850 mW
          EA2 Core 0.9V                899 mV   40625 mA   36538 mW
          EA2 AVDD 1.0V               1000 mV   27250 mA   27276 mW
          EA2 HMC Core 0.9V            897 mV    9616 mA    8627 mW
          EA2 1.2V                    1193 mV   15779 mA   18832 mW
          EA23_HMC_VDDM 1.2V          1197 mV      81 mA      97 mW
          EA2_XR 0.906V                908 mV   14848 mA   13484 mW
          EA3 Core 0.9V                899 mV   40625 mA   36538 mW
          EA3 AVDD 1.0V               1000 mV   28000 mA   28000 mW
          EA3 HMC Core 0.9V            897 mV   10546 mA    9461 mW
          EA3 1.2V                    1197 mV   15895 mA   19028 mW
          EA2_PLL_1V0                 1025 mV       0 mA       0 mW
          EA2_1V04                    1048 mV       0 mA       0 mW
          EA2_2V5                     2516 mV       0 mA       0 mW
          EA2_1V5                     1500 mV       0 mA       0 mW
          EA3_PLL_1V0                 1009 mV       0 mA       0 mW
          EA3_1V04                    1032 mV       0 mA       0 mW
          EA3_2V5                     2551 mV       0 mA       0 mW
          EA3_1V5                     1496 mV       0 mA       0 mW
          EA3_XR 0.906V                908 mV   15895 mA   14434 mW
          EA4 Core 0.9V                900 mV   41000 mA   36916 mW
          EA4 AVDD 1.0V                999 mV   31250 mA   31219 mW
          EA4 HMC Core 0.9V            894 mV    9965 mA    8913 mW
          EA4 1.2V                    1197 mV   15779 mA   18889 mW
          EA45_HMC_VDDM 1.2V          1197 mV     546 mA     654 mW
          EA4_XR 0.906V                908 mV   15197 mA   13801 mW
          EA5 Core 0.9V                900 mV   39750 mA   35790 mW
          EA5 AVDD 1.0V               1000 mV   28000 mA   28000 mW
          EA5 HMC Core 0.9V            897 mV    9965 mA    8940 mW
          EA5 1.2V                    1197 mV   15546 mA   18610 mW
          EA4_PLL_1V0                 1003 mV       0 mA       0 mW
          EA4_1V04                    1041 mV       0 mA       0 mW
          EA4_2V5                     2541 mV       0 mA       0 mW
          EA4_1V5                     1506 mV       0 mA       0 mW
          EA5_PLL_1V0                 1022 mV       0 mA       0 mW
          EA5_1V04                    1048 mV       0 mA       0 mW
          EA5_2V5                     2532 mV       0 mA       0 mW
          EA5_1V5                     1509 mV       0 mA       0 mW
          VDD2V5                      2503 mV       0 mA       0 mW
          VDD1V5                      1509 mV       0 mA       0 mW
          VDD1V2                      1206 mV       0 mA       0 mW
          EA5_XR 0.906V                902 mV   14500 mA   13088 mW
FPC 2 status:
  State                       Online
  FPC 2 Intake-A Temp Sensor              33 degrees C / 91 degrees F
  FPC 2 Exhaust-A Temp Sensor             52 degrees C / 125 degrees F
  FPC 2 Exhaust-B Temp Sensor             50 degrees C / 122 degrees F
  FPC 2 EA0 Temp Sensor                   72 degrees C / 161 degrees F
  FPC 2 EA0_XR0 Temp Sensor               76 degrees C / 168 degrees F
  FPC 2 EA0_XR1 Temp Sensor               79 degrees C / 174 degrees F
  FPC 2 EA1 Temp Sensor                   64 degrees C / 147 degrees F
  FPC 2 EA1_XR0 Temp Sensor               68 degrees C / 154 degrees F
  FPC 2 EA1_XR1 Temp Sensor               66 degrees C / 150 degrees F
  FPC 2 EA2 Temp Sensor                   75 degrees C / 167 degrees F
  FPC 2 EA2_XR0 Temp Sensor               81 degrees C / 177 degrees F
```

```
FPC 2 EA2_XR1 Temp Sensor              81 degrees C / 177 degrees F
FPC 2 EA3 Temp Sensor                  67 degrees C / 152 degrees F
FPC 2 EA3_XR0 Temp Sensor              69 degrees C / 156 degrees F
FPC 2 EA3_XR1 Temp Sensor              69 degrees C / 156 degrees F
FPC 2 EA4 Temp Sensor                  76 degrees C / 168 degrees F
FPC 2 EA4_XR0 Temp Sensor              77 degrees C / 170 degrees F
FPC 2 EA4_XR1 Temp Sensor              76 degrees C / 168 degrees F
FPC 2 EA5 Temp Sensor                  60 degrees C / 140 degrees F
FPC 2 EA5_XR0 Temp Sensor              65 degrees C / 149 degrees F
FPC 2 EA5_XR1 Temp Sensor              65 degrees C / 149 degrees F
FPC 2 EA0_HMC0 Logic die               84 degrees C / 183 degrees F
FPC 2 EA0_HMC0 DRAM botm               81 degrees C / 177 degrees F
FPC 2 EA0_HMC1 Logic die               86 degrees C / 186 degrees F
FPC 2 EA0_HMC1 DRAM botm               83 degrees C / 181 degrees F
FPC 2 EA0_HMC2 Logic die               83 degrees C / 181 degrees F
FPC 2 EA0_HMC2 DRAM botm               80 degrees C / 176 degrees F
FPC 2 EA1_HMC0 Logic die               76 degrees C / 168 degrees F
FPC 2 EA1_HMC0 DRAM botm               73 degrees C / 163 degrees F
FPC 2 EA1_HMC1 Logic die               77 degrees C / 170 degrees F
FPC 2 EA1_HMC1 DRAM botm               74 degrees C / 165 degrees F
FPC 2 EA1_HMC2 Logic die               76 degrees C / 168 degrees F
FPC 2 EA1_HMC2 DRAM botm               73 degrees C / 163 degrees F
FPC 2 EA2_HMC0 Logic die               87 degrees C / 188 degrees F
FPC 2 EA2_HMC0 DRAM botm               84 degrees C / 183 degrees F
FPC 2 EA2_HMC1 Logic die               89 degrees C / 192 degrees F
FPC 2 EA2_HMC1 DRAM botm               86 degrees C / 186 degrees F
FPC 2 EA2_HMC2 Logic die               88 degrees C / 190 degrees F
FPC 2 EA2_HMC2 DRAM botm               85 degrees C / 185 degrees F
FPC 2 EA3_HMC0 Logic die               80 degrees C / 176 degrees F
FPC 2 EA3_HMC0 DRAM botm               77 degrees C / 170 degrees F
FPC 2 EA3_HMC1 Logic die               81 degrees C / 177 degrees F
FPC 2 EA3_HMC1 DRAM botm               78 degrees C / 172 degrees F
FPC 2 EA3_HMC2 Logic die               81 degrees C / 177 degrees F
FPC 2 EA3_HMC2 DRAM botm               78 degrees C / 172 degrees F
FPC 2 EA4_HMC0 Logic die               88 degrees C / 190 degrees F
FPC 2 EA4_HMC0 DRAM botm               85 degrees C / 185 degrees F
FPC 2 EA4_HMC1 Logic die               90 degrees C / 194 degrees F
FPC 2 EA4_HMC1 DRAM botm               87 degrees C / 188 degrees F
FPC 2 EA4_HMC2 Logic die               81 degrees C / 177 degrees F
FPC 2 EA4_HMC2 DRAM botm               78 degrees C / 172 degrees F
FPC 2 EA5_HMC0 Logic die               73 degrees C / 163 degrees F
FPC 2 EA5_HMC0 DRAM botm               70 degrees C / 158 degrees F
FPC 2 EA5_HMC1 Logic die               69 degrees C / 156 degrees F
FPC 2 EA5_HMC1 DRAM botm               66 degrees C / 150 degrees F
FPC 2 EA5_HMC2 Logic die               73 degrees C / 163 degrees F
FPC 2 EA5_HMC2 DRAM botm               70 degrees C / 158 degrees F
Power
       12V SS 1                   12285 mV    9408 mA  115582 mW
       12V SS 2                   12338 mV   20881 mA  257637 mW
       12V SS 3                   12351 mV   10317 mA  127430 mW
       12V SS 4                   12285 mV   21054 mA  258660 mW
       12V SS 5                   12153 mV   13954 mA  169591 mW
       VDD 1.0V_A                  1000 mV   91000 mA   91000 mW
       VDD 1.0V_B                     0 mV       0 mA       0 mW
       VDD 3.3V                    3298 mV    9125 mA   30101 mW
       VDD 0.9V                     897 mV    3337 mA    2993 mW
       ETH SW 1V                      0 mV       0 mA       0 mW
       VDD 1.8V                    1809 mV    1127 mA    2040 mW
       PVCC                         835 mV       0 mA       0 mW
       PVNN                        1000 mV       0 mA       0 mW
       V1P0                        1003 mV       0 mA       0 mW
```

```
V1P1                        1070 mV       0 mA       0 mW
V1P3                        1348 mV       0 mA       0 mW
VDDQ                        1493 mV       0 mA       0 mW
V1P8                        1806 mV       0 mA       0 mW
VDD3V3                      3303 mV       0 mA       0 mW
V5V0_BIAS                   5000 mV       0 mA       0 mW
VDD12V0                    12116 mV       0 mA       0 mW
EA0 Core 0.9V                900 mV   38875 mA   35002 mW
EA0 AVDD 1.0V                999 mV   31875 mA   31843 mW
EA0 HMC Core 0.9V            894 mV    9034 mA    8081 mW
EA0 1.2V                    1197 mV   15430 mA   18471 mW
EA01_HMC_VDDM 1.2V          1200 mV    -267 mA    -321 mW
EA0_XR 0.906V                908 mV   15430 mA   14012 mW
EA1 Core 0.9V                900 mV   38875 mA   35002 mW
EA1 AVDD 1.0V               1000 mV   28250 mA   28250 mW
EA1 HMC Core 0.9V            899 mV    8802 mA    7920 mW
EA1 1.2V                    1197 mV   15081 mA   18054 mW
EA0_PLL_1V0                 1003 mV       0 mA       0 mW
EA0_1V04                    1048 mV       0 mA       0 mW
EA0_2V5                     2425 mV       0 mA       0 mW
EA0_1V5                     1483 mV       0 mA       0 mW
EA1_PLL_1V0                 1019 mV       0 mA       0 mW
EA1_1V04                    1019 mV       0 mA       0 mW
EA1_2V5                     2490 mV       0 mA       0 mW
EA1_1V5                     1480 mV       0 mA       0 mW
EA1_XR 0.906V                908 mV   14965 mA   13590 mW
EA2 Core 0.9V                900 mV   44000 mA   39617 mW
EA2 AVDD 1.0V               1000 mV   28625 mA   28625 mW
EA2 HMC Core 0.9V            891 mV   10546 mA    9404 mW
EA2 1.2V                    1200 mV   15313 mA   18387 mW
EA23_HMC_VDDM 1.2V          1193 mV    -267 mA    -319 mW
EA2_XR 0.906V                908 mV   15197 mA   13801 mW
EA3 Core 0.9V                900 mV   39750 mA   35790 mW
EA3 AVDD 1.0V               1000 mV   27750 mA   27750 mW
EA3 HMC Core 0.9V            897 mV    9267 mA    8314 mW
EA3 1.2V                    1197 mV   15430 mA   18471 mW
EA2_PLL_1V0                 1009 mV       0 mA       0 mW
EA2_1V04                    1041 mV       0 mA       0 mW
EA2_2V5                     2496 mV       0 mA       0 mW
EA2_1V5                     1493 mV       0 mA       0 mW
EA3_PLL_1V0                 1003 mV       0 mA       0 mW
EA3_1V04                    1041 mV       0 mA       0 mW
EA3_2V5                     2490 mV       0 mA       0 mW
EA3_1V5                     1500 mV       0 mA       0 mW
EA3_XR 0.906V                908 mV   15081 mA   13695 mW
EA4 Core 0.9V                899 mV   45750 mA   41148 mW
EA4 AVDD 1.0V               1000 mV   32250 mA   32250 mW
EA4 HMC Core 0.9V            897 mV   10779 mA    9670 mW
EA4 1.2V                    1193 mV   16011 mA   19110 mW
EA45_HMC_VDDM 1.2V          1200 mV    -267 mA    -321 mW
EA4_XR 0.906V                905 mV   15779 mA   14286 mW
EA5 Core 0.9V                900 mV   38375 mA   34552 mW
EA5 AVDD 1.0V               1000 mV   27750 mA   27777 mW
EA5 HMC Core 0.9V            899 mV    8453 mA    7606 mW
EA5 1.2V                    1200 mV   14732 mA   17689 mW
EA4_PLL_1V0                 1012 mV       0 mA       0 mW
EA4_1V04                    1029 mV       0 mA       0 mW
EA4_2V5                     2496 mV       0 mA       0 mW
EA4_1V5                     1490 mV       0 mA       0 mW
EA5_PLL_1V0                 1003 mV       0 mA       0 mW
EA5_1V04                    1032 mV       0 mA       0 mW
```

```
          EA5_2V5                      2503 mV       0 mA       0 mW
          EA5_1V5                      1480 mV       0 mA       0 mW
          VDD2V5                       2461 mV       0 mA       0 mW
          VDD1V5                       1490 mV       0 mA       0 mW
          VDD1V2                       1212 mV       0 mA       0 mW
          EA5_XR 0.906V                 910 mV   13686 mA   12466 mW
FPC 3 status:
  State                       Online
  FPC 3 Intake-A Temp Sensor              30 degrees C / 86 degrees F
  FPC 3 Exhaust-A Temp Sensor             48 degrees C / 118 degrees F
  FPC 3 Exhaust-B Temp Sensor             45 degrees C / 113 degrees F
  FPC 3 EA0 Temp Sensor                   60 degrees C / 140 degrees F
  FPC 3 EA0_XR0 Temp Sensor               65 degrees C / 149 degrees F
  FPC 3 EA0_XR1 Temp Sensor               67 degrees C / 152 degrees F
  FPC 3 EA1 Temp Sensor                   54 degrees C / 129 degrees F
  FPC 3 EA1_XR0 Temp Sensor               60 degrees C / 140 degrees F
  FPC 3 EA1_XR1 Temp Sensor               58 degrees C / 136 degrees F
  FPC 3 EA2 Temp Sensor                   62 degrees C / 143 degrees F
  FPC 3 EA2_XR0 Temp Sensor               67 degrees C / 152 degrees F
  FPC 3 EA2_XR1 Temp Sensor               67 degrees C / 152 degrees F
  FPC 3 EA3 Temp Sensor                   55 degrees C / 131 degrees F
  FPC 3 EA3_XR0 Temp Sensor               57 degrees C / 134 degrees F
  FPC 3 EA3_XR1 Temp Sensor               57 degrees C / 134 degrees F
  FPC 3 EA4 Temp Sensor                   69 degrees C / 156 degrees F
  FPC 3 EA4_XR0 Temp Sensor               71 degrees C / 159 degrees F
  FPC 3 EA4_XR1 Temp Sensor               70 degrees C / 158 degrees F
  FPC 3 EA5 Temp Sensor                   55 degrees C / 131 degrees F
  FPC 3 EA5_XR0 Temp Sensor               58 degrees C / 136 degrees F
  FPC 3 EA5_XR1 Temp Sensor               59 degrees C / 138 degrees F
  FPC 3 EA0_HMC0 Logic die                69 degrees C / 156 degrees F
  FPC 3 EA0_HMC0 DRAM botm                66 degrees C / 150 degrees F
  FPC 3 EA0_HMC1 Logic die                70 degrees C / 158 degrees F
  FPC 3 EA0_HMC1 DRAM botm                67 degrees C / 152 degrees F
  FPC 3 EA0_HMC2 Logic die                70 degrees C / 158 degrees F
  FPC 3 EA0_HMC2 DRAM botm                67 degrees C / 152 degrees F
  FPC 3 EA1_HMC0 Logic die                68 degrees C / 154 degrees F
  FPC 3 EA1_HMC0 DRAM botm                65 degrees C / 149 degrees F
  FPC 3 EA1_HMC1 Logic die                65 degrees C / 149 degrees F
  FPC 3 EA1_HMC1 DRAM botm                62 degrees C / 143 degrees F
  FPC 3 EA1_HMC2 Logic die                64 degrees C / 147 degrees F
  FPC 3 EA1_HMC2 DRAM botm                61 degrees C / 141 degrees F
  FPC 3 EA2_HMC0 Logic die                74 degrees C / 165 degrees F
  FPC 3 EA2_HMC0 DRAM botm                71 degrees C / 159 degrees F
  FPC 3 EA2_HMC1 Logic die                77 degrees C / 170 degrees F
  FPC 3 EA2_HMC1 DRAM botm                74 degrees C / 165 degrees F
  FPC 3 EA2_HMC2 Logic die                74 degrees C / 165 degrees F
  FPC 3 EA2_HMC2 DRAM botm                71 degrees C / 159 degrees F
  FPC 3 EA3_HMC0 Logic die                70 degrees C / 158 degrees F
  FPC 3 EA3_HMC0 DRAM botm                67 degrees C / 152 degrees F
  FPC 3 EA3_HMC1 Logic die                68 degrees C / 154 degrees F
  FPC 3 EA3_HMC1 DRAM botm                65 degrees C / 149 degrees F
  FPC 3 EA3_HMC2 Logic die                68 degrees C / 154 degrees F
  FPC 3 EA3_HMC2 DRAM botm                65 degrees C / 149 degrees F
  FPC 3 EA4_HMC0 Logic die                82 degrees C / 179 degrees F
  FPC 3 EA4_HMC0 DRAM botm                79 degrees C / 174 degrees F
  FPC 3 EA4_HMC1 Logic die                80 degrees C / 176 degrees F
  FPC 3 EA4_HMC1 DRAM botm                77 degrees C / 170 degrees F
  FPC 3 EA4_HMC2 Logic die                81 degrees C / 177 degrees F
  FPC 3 EA4_HMC2 DRAM botm                78 degrees C / 172 degrees F
  FPC 3 EA5_HMC0 Logic die                69 degrees C / 156 degrees F
  FPC 3 EA5_HMC0 DRAM botm                66 degrees C / 150 degrees F
```

```
FPC 3 EA5_HMC1 Logic die                70 degrees C / 158 degrees F
FPC 3 EA5_HMC1 DRAM botm                67 degrees C / 152 degrees F
FPC 3 EA5_HMC2 Logic die                69 degrees C / 156 degrees F
FPC 3 EA5_HMC2 DRAM botm                66 degrees C / 150 degrees F
Power
       12V SS 1                   12259 mV    9538 mA  116927 mW
       12V SS 2                   12259 mV   20491 mA  251202 mW
       12V SS 3                   12298 mV    9711 mA  119433 mW
       12V SS 4                   12219 mV   20491 mA  250391 mW
       12V SS 5                   12206 mV   10447 mA  127520 mW
       VDD 1.0V_A                  1000 mV   42250 mA   42291 mW
       VDD 1.0V_B                   996 mV    8918 mA    8890 mW
       VDD 3.3V                    3301 mV   10375 mA   34255 mW
       VDD 0.9V                     897 mV    3569 mA    3202 mW
       ETH SW 1V                    983 mV    4267 mA    4195 mW
       VDD 1.8V                    1812 mV    1825 mA    3309 mW
       PVCC                         974 mV       0 mA       0 mW
       PVNN                        1003 mV       0 mA       0 mW
       V1P0                        1003 mV       0 mA       0 mW
       V1P1                        1070 mV       0 mA       0 mW
       V1P3                        1351 mV       0 mA       0 mW
       VDDQ                        1496 mV       0 mA       0 mW
       V1P8                        1809 mV       0 mA       0 mW
       VDD3V3                      3309 mV       0 mA       0 mW
       V5V0_BIAS                   4987 mV       0 mA       0 mW
       VDD12V0                    12212 mV       0 mA       0 mW
       EA0 Core 0.9V                900 mV   38125 mA   34327 mW
       EA0 AVDD 1.0V                999 mV   31125 mA   31094 mW
       EA0 HMC Core 0.9V            897 mV    9500 mA    8522 mW
       EA0 1.2V                    1193 mV   15430 mA   18416 mW
       EA01_HMC_VDDM 1.2V          1193 mV     313 mA     374 mW
       EA0_XR 0.906V                913 mV   14965 mA   13671 mW
       EA1 Core 0.9V                900 mV   39750 mA   35790 mW
       EA1 AVDD 1.0V               1000 mV   26000 mA   26000 mW
       EA1 HMC Core 0.9V            897 mV    8918 mA    8001 mW
       EA1 1.2V                    1200 mV   15779 mA   18946 mW
       EA0_PLL_1V0                 1003 mV       0 mA       0 mW
       EA0_1V04                    1019 mV       0 mA       0 mW
       EA0_2V5                     2448 mV       0 mA       0 mW
       EA0_1V5                     1470 mV       0 mA       0 mW
       EA1_PLL_1V0                 1016 mV       0 mA       0 mW
       EA1_1V04                    1035 mV       0 mA       0 mW
       EA1_2V5                     2506 mV       0 mA       0 mW
       EA1_1V5                     1483 mV       0 mA       0 mW
       EA1_XR 0.906V                908 mV   13918 mA   12639 mW
       EA2 Core 0.9V                900 mV   38625 mA   34777 mW
       EA2 AVDD 1.0V               1000 mV   26375 mA   26400 mW
       EA2 HMC Core 0.9V            897 mV    9383 mA    8418 mW
       EA2 1.2V                    1200 mV   15779 mA   18946 mW
       EA23_HMC_VDDM 1.2V          1193 mV      81 mA      97 mW
       EA2_XR 0.906V                908 mV   13918 mA   12639 mW
       EA3 Core 0.9V                899 mV   40250 mA   36201 mW
       EA3 AVDD 1.0V               1000 mV   26750 mA   26776 mW
       EA3 HMC Core 0.9V            894 mV    9267 mA    8289 mW
       EA3 1.2V                    1197 mV   16127 mA   19306 mW
       EA2_PLL_1V0                  993 mV       0 mA       0 mW
       EA2_1V04                    1045 mV       0 mA       0 mW
       EA2_2V5                     2474 mV       0 mA       0 mW
       EA2_1V5                     1490 mV       0 mA       0 mW
       EA3_PLL_1V0                  980 mV       0 mA       0 mW
       EA3_1V04                    1032 mV       0 mA       0 mW
```

```
    EA3_2V5                     2506 mV       0 mA       0 mW
    EA3_1V5                     1474 mV       0 mA       0 mW
    EA3_XR 0.906V                910 mV   14732 mA   13419 mW
    EA4 Core 0.9V                900 mV   42500 mA   38266 mW
    EA4 AVDD 1.0V               1000 mV   32250 mA   32281 mW
    EA4 HMC Core 0.9V            899 mV   10081 mA    9071 mW
    EA4 1.2V                    1193 mV   16360 mA   19526 mW
    EA45_HMC_VDDM 1.2V          1193 mV     662 mA     791 mW
    EA4_XR 0.906V                908 mV   15430 mA   14012 mW
    EA5 Core 0.9V                899 mV   37000 mA   33278 mW
    EA5 AVDD 1.0V               1000 mV   26125 mA   26150 mW
    EA5 HMC Core 0.9V            897 mV    9267 mA    8314 mW
    EA5 1.2V                    1197 mV   15662 mA   18750 mW
    EA4_PLL_1V0                 1000 mV       0 mA       0 mW
    EA4_1V04                    1029 mV       0 mA       0 mW
    EA4_2V5                     2487 mV       0 mA       0 mW
    EA4_1V5                     1496 mV       0 mA       0 mW
    EA5_PLL_1V0                 1009 mV       0 mA       0 mW
    EA5_1V04                    1032 mV       0 mA       0 mW
    EA5_2V5                     2503 mV       0 mA       0 mW
    EA5_1V5                     1496 mV       0 mA       0 mW
    VDD2V5                      2483 mV       0 mA       0 mW
    VDD1V5                      1470 mV       0 mA       0 mW
    VDD1V2                      1203 mV       0 mA       0 mW
    EA5_XR 0.906V                908 mV   14500 mA   13167 mW
```

show chassis environment fpc (T320, T640, and T1600 Routers)

```
user@host> show chassis environment fpc
FPC 0 status:
  State                           Online
  Temperature Top              42 degrees C / 107 degrees F
  Temperature Bottom           36 degrees C / 96 degrees F
  Temperature MMB1             39 degrees C / 102 degrees F
  Power:
    1.8 V                    1959 mV
    2.5 V                    2495 mV
    3.3 V                    3344 mV
    5.0 V                    5047 mV
    1.8 V bias               1787 mV
    3.3 V bias               3291 mV
    5.0 V bias               4998 mV
    8.0 V bias               7343 mV
  BUS Revision                 40
FPC 1 status:
  State                           Online
  Temperature Top              42 degrees C / 107 degrees F
  Temperature Bottom           39 degrees C / 102 degrees F
  Temperature MMB1             40 degrees C / 104 degrees F
  Power:
    1.8 V                    1956 mV
    2.5 V                    2498 mV
    3.3 V                    3340 mV
    5.0 V                    5023 mV
    1.8 V bias               1782 mV
    3.3 V bias               3277 mV
    5.0 V bias               4989 mV
    8.0 V bias               7289 mV
  BUS Revision                 40
FPC 2 status:
  State                           Online
```



```
  Temperature Top              43 degrees C / 109 degrees F
  Temperature Bottom           39 degrees C / 102 degrees F
  Temperature MMB1             41 degrees C / 105 degrees F
  Power:
    1.8 V                    1963 mV
    2.5 V                    2503 mV
    3.3 V                    3340 mV
    5.0 V                    5042 mV
    1.8 V bias               1797 mV
    3.3 V bias               3311 mV
    5.0 V bias               5013 mV
    8.0 V bias               7221 mV
  BUS Revision                 40
```

show chassis environment fpc (T4000 Router)

```
user@host> show chassis environment fpc
FPC 0 status:
  State                      Online
  Fan Intake                 34 degrees C / 93 degrees F
  Fan Exhaust                48 degrees C / 118 degrees F
  PMB                        47 degrees C / 116 degrees F
  LMB0                       50 degrees C / 122 degrees F
  LMB1                       41 degrees C / 105 degrees F
  LMB2                       35 degrees C / 95 degrees F
  PFE1 LU2                   46 degrees C / 114 degrees F
  PFE1 LU0                   41 degrees C / 105 degrees F
  PFE0 LU0                   57 degrees C / 134 degrees F
  XF1                        47 degrees C / 116 degrees F
  XF0                        52 degrees C / 125 degrees F
  XM1                        41 degrees C / 105 degrees F
  XM0                        50 degrees C / 122 degrees F
  PFE0 LU1                   56 degrees C / 132 degrees F
  PFE0 LU2                   45 degrees C / 113 degrees F
  PFE1 LU1                   37 degrees C / 98 degrees F
  Power 1
    1.0 V                     991 mV
    1.2 V bias               1195 mV
    1.8 V                    1788 mV
    2.5 V                    2483 mV
    3.3 V                    3289 mV
    3.3 V bias               3299 mV
    12.0 V A                10608 mV
    12.0 V B                10637 mV
  Power 2
    0.9 V                     881 mV
    0.9 V PFE0                916 mV
    0.9 V PFE1                903 mV
    1.0 V PFE0               1012 mV
    1.0 V PFE1               1002 mV
    1.1 V                    1095 mV
    1.5 V_0                  1494 mV
    1.5 V_1                  1479 mV
  Power 3
    1.0 V PFE0               1000 mV
    1.0 V PFE1               1002 mV
    1.0 V PFE0 *              995 mV
    1.0 V PFE1 *              995 mV
    1.8 V PFE 0              1788 mV
    1.8 V PFE 1              1789 mV
    2.5 V                    2482 mV
```

```
    12.0 V                    11614 mV
  Power 4
    1.0 V PFE0 LU0             1003 mV
    1.0 V PFE1 LU0             1003 mV
    1.0 V PFE1 LU2             1004 mV
    1.0 V PFE0 LU0 *            995 mV
    1.0 V PFE1 LU0 *            998 mV
    1.0 V PFE1 LU2 *            996 mV
    12.0 V                    11643 mV
    12.0 V C                  11711 mV
  Power (Base/PMB/MMB)
    LMB0 VDD2V5                2488 mV
    LMB0 VDD1V8                1788 mV
    LMB0 VDD1V5                1496 mV
    LMB0 PFE0 LU0 AVDD1V0      1002 mV
    LMB0 PFE0 LU0 VDD1V0       1000 mV
    LMB0 VDD12V0              10752 mV
    LMB1 VDD2V5                2472 mV
    LMB1 VDD1V8                1792 mV
    LMB1 VDD1V5                1480 mV
    LMB1 PFE0 LU2 AVDD1V0       994 mV
    LMB1 PFE0 LU2 VDD1V0       1002 mV
    LMB1 VDD12V0              10800 mV
    LMB2 VDD2V5                2472 mV
    LMB2 VDD1V8                1792 mV
    LMB2 VDD1V5                1486 mV
    LMB2 PFE1 LU1 AVDD1V0       996 mV
    LMB2 PFE1 LU1 VDD1V0        998 mV
    LMB2 VDD12V0              10704 mV
    PMB 1.05v                  1049 mV
    PMB 1.5v                   1500 mV
    PMB 2.5v                   2500 mV
    PMB 3.3v                   3299 mV
  Bus Revision                113
FPC 3 status:
  State                       Online
  Fan Intake                  37 degrees C / 98 degrees F
  Fan Exhaust                 51 degrees C / 123 degrees F
  PMB                         43 degrees C / 109 degrees F
  LMB0                        57 degrees C / 134 degrees F
  LMB1                        54 degrees C / 129 degrees F
  LMB2                        38 degrees C / 100 degrees F
  PFE1 LU2                    63 degrees C / 145 degrees F
  PFE1 LU0                    45 degrees C / 113 degrees F
  PFE0 LU0                    69 degrees C / 156 degrees F
  XF1                         62 degrees C / 143 degrees F
  XF0                         63 degrees C / 145 degrees F
  XM1                         43 degrees C / 109 degrees F
  XM0                         67 degrees C / 152 degrees F
  PFE0 LU1                    63 degrees C / 145 degrees F
  PFE0 LU2                    66 degrees C / 150 degrees F
  PFE1 LU1                    41 degrees C / 105 degrees F
  Power 1
    1.0 V                      1002 mV
    1.2 V bias                 1201 mV
    1.8 V                      1785 mV
    2.5 V                      2485 mV
    3.3 V                      3288 mV
    3.3 V bias                 3285 mV
    12.0 V A                  10412 mV
    12.0 V B                  10515 mV
```

```
  Power 2
    0.9 V                      882 mV
    0.9 V PFE0                 920 mV
    0.9 V PFE1                 905 mV
    1.0 V PFE0                1015 mV
    1.0 V PFE1                1001 mV
    1.1 V                     1094 mV
    1.5 V_0                   1495 mV
    1.5 V_1                   1478 mV
  Power 3
    0.92 V PFE1                998 mV
    1.0 V PFE0                 997 mV
    1.0 V PFE0 *               992 mV
    1.0 V PFE1 *               991 mV
    1.8 V PFE 0               1780 mV
    1.8 V PFE 1               1797 mV
    2.5 V                     2492 mV
    12.0 V                   11604 mV
  Power 4
    1.0 V PFE0 LU0            1003 mV
    1.0 V PFE1 LU0            1004 mV
    1.0 V PFE1 LU2            1003 mV
    1.0 V PFE0 LU0 *          1000 mV
    1.0 V PFE1 LU0 *          1001 mV
    1.0 V PFE1 LU2 *          1003 mV
    12.0 V                   11653 mV
    12.0 V C                 11672 mV
  Power (Base/PMB/MMB)
    LMB0 VDD2V5               2512 mV
    LMB0 VDD1V8               1790 mV
    LMB0 VDD1V5               1500 mV
    LMB0 PFE0 LU0 AVDD1V0     1004 mV
    LMB0 PFE0 LU0 VDD1V0      1002 mV
    LMB0 VDD12V0             10608 mV
    LMB1 VDD2V5               2472 mV
    LMB1 VDD1V8               1788 mV
    LMB1 VDD1V5               1480 mV
    LMB1 PFE0 LU2 AVDD1V0     1000 mV
    LMB1 PFE0 LU2 VDD1V0      1004 mV
    LMB1 VDD12V0             10672 mV
    LMB2 VDD2V5               2488 mV
    LMB2 VDD1V8               1798 mV
    LMB2 VDD1V5               1494 mV
    LMB2 PFE1 LU1 AVDD1V0     1000 mV
    LMB2 PFE1 LU1 VDD1V0      1004 mV
    LMB2 VDD12V0             10528 mV
    PMB 1.05v                 1050 mV
    PMB 1.5v                  1500 mV
    PMB 2.5v                  2499 mV
    PMB 3.3v                  3299 mV
  Bus Revision               113
FPC 5 status:
  State                      Online
  Temperature Top            39 degrees C / 102 degrees F
  Temperature Bottom         38 degrees C / 100 degrees F
  Power
    1.8 V                     1804 mV
    1.8 V bias                1802 mV
    3.3 V                     3294 mV
    3.3 V bias                3277 mV
    5.0 V bias                5008 mV
```

```
    5.0 V TOP                 5067 mV
    8.0 V bias                6642 mV
  Power (Base/PMB/MMB)
    1.2 V                     1202 mV
    1.5 V                     1504 mV
    5.0 V BOT                 5079 mV
    12.0 V TOP Base          11848 mV
    12.0 V BOT Base          11780 mV
    1.1 V PMB                 1111 mV
    1.2 V PMB                 1189 mV
    1.5 V PMB                 1494 mV
    1.8 V PMB                 1819 mV
    2.5 V PMB                 2503 mV
    3.3 V PMB                 3294 mV
    5.0 V PMB                 5035 mV
    12.0  V PMB              11788 mV
    0.75 MMB TOP               766 mV
    1.5 V MMB TOP             1484 mV
    1.8 V MMB TOP             1772 mV
    2.5 V MMB TOP             2485 mV
    1.2 V MMB TOP             1137 mV
    5.0 V MMB TOP             4946 mV
    12.0 V MMB TOP           11772 mV
    3.3 V MMB TOP             3289 mV
    0.75 MMB BOT               759 mV
    1.5 V MMB BOT             1482 mV
    1.8 V MMB BOT             1792 mV
    2.5 V MMB BOT             2490 mV
    1.2 V MMB BOT             1145 mV
    5.0 V MMB BOT             4922 mV
    12.0 V MMB BOT           11625 mV
    3.3 V MMB BOT             3282 mV
    APS 00                    2495 mV
    APS 01                    3308 mV
    APS 02                    3301 mV
    5.0 V PIC 0               4967 mV
    APS 10                    2512 mV
    APS 11                    3316 mV
    APS 12                    3304 mV
    5.0 V PIC 1               5081 mV
  Bus Revision               49
FPC 6 status:
  State                      Online
  Fan Intake                 34 degrees C / 93 degrees F
  Fan Exhaust                49 degrees C / 120 degrees F
  PMB                        40 degrees C / 104 degrees F
  LMB0                       60 degrees C / 140 degrees F
  LMB1                       58 degrees C / 136 degrees F
  LMB2                       40 degrees C / 104 degrees F
  PFE1 LU2                   69 degrees C / 156 degrees F
  PFE1 LU0                   45 degrees C / 113 degrees F
  PFE0 LU0                   71 degrees C / 159 degrees F
  XF1                        58 degrees C / 136 degrees F
  XF0                        65 degrees C / 149 degrees F
  XM1                        40 degrees C / 104 degrees F
  XM0                        66 degrees C / 150 degrees F
  PFE0 LU1                   69 degrees C / 156 degrees F
  PFE0 LU2                   68 degrees C / 154 degrees F
  PFE1 LU1                   42 degrees C / 107 degrees F
  Power 1
    1.0 V                      998 mV
```

```
  1.2 V bias                1191 mV
  1.8 V                     1781 mV
  2.5 V                     2487 mV
  3.3 V                     3302 mV
  3.3 V bias                3300 mV
  12.0 V A                 10388 mV
  12.0 V B                 10388 mV
Power 2
  0.9 V                      902 mV
  0.9 V PFE0                 921 mV
  0.9 V PFE1                 907 mV
  1.0 V PFE0                 996 mV
  1.0 V PFE1                 974 mV
  1.1 V                     1095 mV
  1.5 V_0                   1495 mV
  1.5 V_1                   1478 mV
Power 3
  1.0 V PFE0                 997 mV
  1.0 V PFE1                 998 mV
  1.0 V PFE0 *               993 mV
  1.0 V PFE1 *               991 mV
  1.8 V PFE 0               1796 mV
  1.8 V PFE 1               1789 mV
  2.5 V                     2465 mV
  12.0 V                   11609 mV
Power 4
  1.0 V PFE0 LU0            1003 mV
  1.0 V PFE1 LU0            1006 mV
  1.0 V PFE1 LU2            1002 mV
  1.0 V PFE0 LU0 *          1000 mV
  1.0 V PFE1 LU0 *           998 mV
  1.0 V PFE1 LU2 *           998 mV
  12.0 V                   11638 mV
  12.0 V C                 11702 mV
Power (Base/PMB/MMB)
  LMB0 VDD2V5               2484 mV
  LMB0 VDD1V8               1780 mV
  LMB0 VDD1V5               1496 mV
  LMB0 PFE0 LU0 AVDD1V0      998 mV
  LMB0 PFE0 LU0 VDD1V0      1004 mV
  LMB0 VDD12V0             10528 mV
  LMB1 VDD2V5               2472 mV
  LMB1 VDD1V8               1776 mV
  LMB1 VDD1V5               1474 mV
  LMB1 PFE0 LU2 AVDD1V0      994 mV
  LMB1 PFE0 LU2 VDD1V0      1004 mV
  LMB1 VDD12V0             10544 mV
  LMB2 VDD2V5               2476 mV
  LMB2 VDD1V8               1790 mV
  LMB2 VDD1V5               1492 mV
  LMB2 PFE1 LU1 AVDD1V0      996 mV
  LMB2 PFE1 LU1 VDD1V0      1010 mV
  LMB2 VDD12V0             10528 mV
  PMB 1.05v                 1050 mV
  PMB 1.5v                  1499 mV
  PMB 2.5v                  2500 mV
  PMB 3.3v                  3300 mV
Bus Revision               80
```

show chassis environment fpc lcc (TX Matrix Router)

```
user@host> show chassis environment fpc lcc 0
lcc0-re0:
--------------------------------------------------------------------------
FPC 1 status:
  State                           Online
  Temperature Top              30 degrees C / 86 degrees F
  Temperature Bottom           25 degrees C / 77 degrees F
  Temperature MMB0                Absent
  Temperature MMB1             27 degrees C / 80 degrees F
  Power:
    1.8 V                    1813 mV
    2.5 V                    2504 mV
    3.3 V                    3338 mV
    5.0 V                    5037 mV
    1.8 V bias               1797 mV
    3.3 V bias               3301 mV
    5.0 V bias               5013 mV
    8.0 V bias               7345 mV
  BUS Revision                 40
FPC 2 status:
  State                           Online
  Temperature Top              37 degrees C / 98 degrees F
  Temperature Bottom           26 degrees C / 78 degrees F
  Temperature MMB0             32 degrees C / 89 degrees F
  Temperature MMB1             27 degrees C / 80 degrees F
  Power:
    1.8 V                    1791 mV
    2.5 V                    2517 mV
    3.3 V                    3308 mV
    5.0 V                    5052 mV
    1.8 V bias               1797 mV
    3.3 V bias               3289 mV
    5.0 V bias               4991 mV
    8.0 V bias               7477 mV
  BUS Revision                 40
```

show chassis environment fpc lcc (TX Matrix Plus Router)

```
user@host> show chassis environment fpc lcc 0
lcc0-re0:
--------------------------------------------------------------------------
FPC 1 status:
  State                      Online
  Temperature Top            46 degrees C / 114 degrees F
  Temperature Bottom         47 degrees C / 116 degrees F
  Power
    1.8 V                     1788 mV
    1.8 V bias                1787 mV
    3.3 V                     3321 mV
    3.3 V bias                3306 mV
    5.0 V bias                5018 mV
    5.0 V TOP                 5037 mV
    8.0 V bias                7223 mV
  Power (Base/PMB/MMB)
    1.2 V                     1205 mV
    1.5 V                     1503 mV
    5.0 V BOT                 5084 mV
    12.0 V TOP Base          11775 mV
```

```
    12.0 V BOT Base          11794 mV
    1.1 V PMB                 1108 mV
    1.2 V PMB                 1196 mV
    1.5 V PMB                 1499 mV
    1.8 V PMB                 1811 mV
    2.5 V PMB                 2515 mV
    3.3 V PMB                 3318 mV
    5.0 V PMB                 5030 mV
    12.0  V PMB              11832 mV
    0.75 MMB TOP               752 mV
    1.5 V MMB TOP             1489 mV
    1.8 V MMB TOP             1782 mV
    2.5 V MMB TOP             2498 mV
    1.2 V MMB TOP             1155 mV
    5.0 V MMB TOP             4902 mV
    12.0 V MMB TOP           11721 mV
    3.3 V MMB TOP             3316 mV
    0.75 MMB BOT               754 mV
    1.5 V MMB BOT             1482 mV
    1.8 V MMB BOT             1758 mV
    2.5 V MMB BOT             2488 mV
    1.2 V MMB BOT             1157 mV
    5.0 V MMB BOT             4962 mV
    12.0 V MMB BOT           11691 mV
    3.3 V MMB BOT             3308 mV
    APS 00                    1484 mV
    APS 01                    2503 mV
    APS 02                    3313 mV
    5.0 V PIC 0               5025 mV
    APS 10                    1501 mV
    APS 11                    2466 mV
    APS 12                    3311 mV
    5.0 V PIC 1               5081 mV
  Bus Revision               49
```

show chassis environment fpc (QFX Series and OCX Series)

```
user@switch> show chassis environment fpc 0
FPC 0 status:
  State                      Online
  Temperature                42 degrees C / 107 degrees F
```

show chassis environment fpc interconnect-device (QFabric Systems)

```
user@switch> show chassis environment fpc interconnect-device interconnect1 0
FC 0 FPC 0 status:
  State                      Online
  Left Intake Temperature    24 degrees C / 75 degrees F
  Right Intake Temperature   24 degrees C / 75 degrees F
  Left Exhaust Temperature   27 degrees C / 80 degrees F
  Right Exhaust Temperature  27 degrees C / 80 degrees F
  Power
    BIAS 3V3                  3330 mV
    VDD 3V3                   3300 mV
    VDD 2V5                   2502 mV
    VDD 1V5                   1496 mV
    VDD 1V2                   1194 mV
    VDD 1V0                   1000 mV
    SW0 VDD  1V0              1020 mV
    SW0 CVDD 1V025            1032 mV
```

```
    SW1 VDD  1V0              1022 mV
    SW1 CVDD 1V025            1030 mV
    VDD 12V0 DIV3_33          3414 mV
```

show chassis environment fpc 5(PTX3000 Packet Transport Router)

```
user@host> show chassis environment fpc 5
FPC 5 status:
  State                       Online
  Intake Temperature          31 degrees C / 87 degrees F
  Exhaust Temperature         41 degrees C / 105 degrees F
  Power
    FPC 12.0v                  12221 mV
    FPC VCC 0.5-1.3v            1640 mV
    FPC VNN 0.5-1.3v            1640 mV
    FPC 1.0v                    1640 mV
    FPC 1.1v                    1640 mV
    FPC 1.35v                   1640 mV
    FPC VDDQ 1.5v               1640 mV
    FPC 1.8v                    1640 mV
    FPC 3.3v                    3280 mV
    FPC 5.0v bias               5143 mV
    FPC 5.0v usb                5143 mV
    FPC VCC 12.0v              12289 mV
    FPC Vref 3.3v               3280 mV
    MAIN 12.0v-i                2265 mA
```

show chassis environment fpc 0 (PTX5000 Packet Transport Router)

```
user@host> show chassis environment fpc 0
FPC 0 status:
  State                       Online
  PMB Temperature             35 degrees C / 95 degrees F
  Intake Temperature          33 degrees C / 91 degrees F
  Exhaust A Temperature       51 degrees C / 123 degrees F
  Exhaust B Temperature       43 degrees C / 109 degrees F
  TL0 Temperature             48 degrees C / 118 degrees F
  TQ0 Temperature             53 degrees C / 127 degrees F
  TL1 Temperature             56 degrees C / 132 degrees F
  TQ1 Temperature             58 degrees C / 136 degrees F
  TL2 Temperature             55 degrees C / 131 degrees F
  TQ2 Temperature             57 degrees C / 134 degrees F
  TL3 Temperature             59 degrees C / 138 degrees F
  TQ3 Temperature             59 degrees C / 138 degrees F
  Power
    PMB   1.05v               1049 mV
    PMB   1.5v                1500 mV
    PMB   2.5v                2500 mV
    PMB   3.3v                3299 mV
    PFE0  1.5v                1500 mV
    PFE0  1.0v                 999 mV
    TQ0   0.9v                 900 mV
    TL0   0.9v                 900 mV
    PFE1  1.5v                1499 mV
    PFE1  1.0v                 999 mV
    TQ1   0.9v                 899 mV
    TL1   0.9v                 900 mV
    PFE2  1.5v                1500 mV
    PFE2  1.0v                1000 mV
    TQ2   0.9v                 900 mV
```

```
    TL2   0.9v                 900 mV
    PFE3  1.5v                1499 mV
    PFE3  1.0v                1000 mV
    TQ3   0.9v                 900 mV
    TL3   0.9v                 900 mV
    Bias  3.3v                3327 mV
    FPC   3.3v                3300 mV
    FPC   2.5v                2500 mV
    SAM   0.9v                 900 mV
    A    12.0v                2014 mV
    B    12.0v                2030 mV
```

show chassis environment fpc 07 (PTX5000 Packet Transport Router with FPC2-PTX-P1A)

```
user@host> show chassis environment fpc 07
FPC 7 status:
  State                     Online
  PMB TEMP0 Temperature     32 degrees C / 89 degrees F
  PMB TEMP1 Temperature     28 degrees C / 82 degrees F
  PMB CPU Temperature       46 degrees C / 114 degrees F
  Intake Temperature        35 degrees C / 95 degrees F
  Exhaust A Temperature     55 degrees C / 131 degrees F
  Exhaust B Temperature     54 degrees C / 129 degrees F
  TL5 Temperature           59 degrees C / 138 degrees F
  TQ5 Temperature           57 degrees C / 134 degrees F
  TL6 Temperature           57 degrees C / 134 degrees F
  TQ6 Temperature           51 degrees C / 123 degrees F
  TL1 Temperature           76 degrees C / 168 degrees F
  TQ1 Temperature           58 degrees C / 136 degrees F
  TL2 Temperature           75 degrees C / 167 degrees F
  TQ2 Temperature           57 degrees C / 134 degrees F
  TL4 Temperature           52 degrees C / 125 degrees F
  TQ4 Temperature           66 degrees C / 150 degrees F
  TL7 Temperature           52 degrees C / 125 degrees F
  TQ7 Temperature           60 degrees C / 140 degrees F
  TL0 Temperature           72 degrees C / 161 degrees F
  TQ0 Temperature           73 degrees C / 163 degrees F
  TL3 Temperature           64 degrees C / 147 degrees F
  TQ3 Temperature           70 degrees C / 158 degrees F
  Power
    PMB   1.05v               1049 mV
    PMB   3.3v                3299 mV
    PMB   1.1v-a              1100 mV
    PMB   1.5v                1499 mV
    PMB   1.1v-b              1100 mV
    Base  3.3v                3300 mV
    FPC Base  2.5v            2499 mV
    TL1   0.9v                 897 mV
    TQ1   0.9v                 897 mV
    PFE1  1.0v                 999 mV
    PFE1  1.5v                1499 mV
    TL2   0.9v                 897 mV
    TQ2   0.9v                 897 mV
    PFE2  1.0v                 999 mV
    PFE2  1.5v                1499 mV
    FPC Base  1.0v            1000 mV
    FPC Base  1.2v            1199 mV
    TL5   0.9v                 898 mV
    TQ5   0.9v                 898 mV
    PFE5  1.0v                1000 mV
    PFE5  1.5v                1500 mV
```

```
    TL6   0.9v                 897 mV
    TQ6   0.9v                 897 mV
    PFE6  1.0v                1000 mV
    PFE6  1.5v                1499 mV
    Mezz Base  2.5v           2500 mV
    TL0   0.9v                 896 mV
    TQ0   0.9v                 896 mV
    PFE0  1.0v                 999 mV
    PFE0  1.5v                1499 mV
```

show chassis environment fpc (PTX10008 router)

```
user@host> show chassis environment fpc
FPC 0 status:
  State                      Online
  FPC 0 Intake-A Temp Sensor 37 degrees C / 98 degrees F
  FPC 0 Intake-B Temp Sensor 34 degrees C / 93 degrees F
  FPC 0 Exhaust-A Temp Sensor37 degrees C / 98 degrees F
  FPC 0 Exhaust-B Temp Sensor38 degrees C / 100 degrees F
  FPC 0 Exhaust-C Temp Sensor40 degrees C / 104 degrees F
  FPC 0 PE0 Temp Sensor      41 degrees C / 105 degrees F
  FPC 0 PE1 Temp Sensor      42 degrees C / 107 degrees F
  FPC 0 PE2 Temp Sensor      44 degrees C / 111 degrees F
  FPC 0 LCPU Temp Sensor     40 degrees C / 104 degrees F
  Power
         PE0 Core 0.9V                872 mV   28777 mA   25146 mW
         PE0 HMC0 Core 0.9V           899 mV   10359 mA    9328 mW
         PE1 Core 0.9V                896 mV   29476 mA   26414 mW
         PE1 HMC0 Core 0.9V           899 mV   10218 mA    9187 mW
         PE2 Core 0.9V                872 mV   28839 mA   25199 mW
         PE2 HMC0 Core 0.9V           900 mV   10296 mA    9265 mW
         PE0 Serdes 1.0V             1020 mV   29000 mA   29593 mW
         PE1 Serdes 1.0V             1019 mV   29109 mA   29718 mW
         PE2 Serdes 1.0V             1019 mV   28484 mA   29078 mW
         LCPU Platform 1.1V          1099 mV    3515 mA    3867 mW
         LCPU Core 1.0V              1000 mV    8750 mA    8703 mW
         PHY VDD B 1.0V              1000 mV   17062 mA   17031 mW
         PHY VDD A 1.0V               999 mV   15640 mA   15625 mW
         BCM Core 1.0V                999 mV    7054 mA    7054 mW
         BCM PEX 1.0V                 999 mV    3562 mA    3558 mW
         HMC Core 1.2V               1199 mV    1280 mA    1513 mW
         HMC Serdes 1.2V             1199 mV   32937 mA   39500 mW
         VDD 1.5V                    1500 mV    2824 mA    4234 mW
         VDD 2.5V                    2449 mV    3812 mA    9343 mW
         VDD 3.3V                    3299 mV    5085 mA   16796 mW
         12V                        12259 mV   29609 mA  368196 mW
FPC 1 status:
  State                      Online
  FPC 1 Intake-A Temp Sensor 37 degrees C / 98 degrees F
  FPC 1 Intake-B Temp Sensor 34 degrees C / 93 degrees F
  FPC 1 Exhaust-A Temp Sensor38 degrees C / 100 degrees F
  FPC 1 Exhaust-B Temp Sensor38 degrees C / 100 degrees F
  FPC 1 Exhaust-C Temp Sensor40 degrees C / 104 degrees F
  FPC 1 PE0 Temp Sensor      41 degrees C / 105 degrees F
  FPC 1 PE1 Temp Sensor      42 degrees C / 107 degrees F
  FPC 1 PE2 Temp Sensor      44 degrees C / 111 degrees F
  FPC 1 LCPU Temp Sensor     39 degrees C / 102 degrees F
  Power
         PE0 Core 0.9V                898 mV   29351 mA   26421 mW
         PE0 HMC0 Core 0.9V           899 mV    9734 mA    8750 mW
         PE1 Core 0.9V                873 mV   28539 mA   24933 mW
```

```
          PE1 HMC0 Core 0.9V           899 mV    9937 mA    8937 mW
          PE2 Core 0.9V                875 mV   28906 mA   25316 mW
          PE2 HMC0 Core 0.9V           899 mV   10140 mA    9125 mW
          PE0 Serdes 1.0V             1019 mV   28312 mA   28890 mW
          PE1 Serdes 1.0V             1020 mV   28656 mA   29234 mW
          PE2 Serdes 1.0V             1020 mV   29437 mA   30015 mW
          LCPU Platform 1.1V          1100 mV    4617 mA    5078 mW
          LCPU Core 1.0V              1000 mV    8781 mA    8781 mW
          PHY VDD B 1.0V              1000 mV   15953 mA   15984 mW
          PHY VDD A 1.0V              1000 mV   15484 mA   15484 mW
          BCM Core 1.0V                999 mV    7945 mA    7937 mW
          BCM PEX 1.0V                 999 mV    3515 mA    3515 mW
          HMC Core 1.2V               1199 mV    1269 mA    1521 mW
          HMC Serdes 1.2V             1199 mV   33000 mA   39593 mW
          VDD 1.5V                    1500 mV    2691 mA    4062 mW
          VDD 2.5V                    2449 mV    3582 mA    8781 mW
          VDD 3.3V                    3300 mV    2563 mA    8458 mW
          12V                        12311 mV   29002 mA  357577 mW
FPC 2 status:
  State                      Online
  FPC 2 Intake-A Temp Sensor 43 degrees C / 109 degrees F
  FPC 2 Intake-B Temp Sensor 30 degrees C / 86 degrees F
  FPC 2 Exhaust-A Temp Sensor50 degrees C / 122 degrees F
  FPC 2 Exhaust-B Temp Sensor52 degrees C / 125 degrees F
  FPC 2 Exhaust-C Temp Sensor51 degrees C / 123 degrees F
  FPC 2 PE0 Temp Sensor      48 degrees C / 118 degrees F
  FPC 2 PE1 Temp Sensor      56 degrees C / 132 degrees F
  FPC 2 PE2 Temp Sensor      48 degrees C / 118 degrees F
  FPC 2 PE3 Temp Sensor      57 degrees C / 134 degrees F
  FPC 2 PE4 Temp Sensor      48 degrees C / 118 degrees F
  FPC 2 PE5 Temp Sensor      60 degrees C / 140 degrees F
  FPC 2 LCPU Temp Sensor     47 degrees C / 116 degrees F
  Power
          PE0 Core 0.9V                874 mV   28117 mA   24617 mW
          PE1 Core 0.9V                899 mV   29601 mA   26632 mW
          PE0 Serdes 1.0V             1019 mV   41031 mA   41843 mW
          PE1 Serdes 1.0V             1019 mV   35656 mA   36343 mW
          PE0 HMC Core 0.9V            899 mV    8125 mA    7312 mW
          PE0,1 HMC Memory 1.2V       1199 mV     565 mA     688 mW
          PE1 HMC Core 0.9V            899 mV    7921 mA    7125 mW
          PE0,1 HMC Serdes 1.2V       1199 mV   21281 mA   25562 mW
          PE2 Core 0.9V                899 mV   29187 mA   26242 mW
          PE3 Core 0.9V                899 mV   29976 mA   27074 mW
          PE2 Serdes 1.0V             1019 mV   38562 mA   39343 mW
          PE3 Serdes 1.0V             1019 mV   34937 mA   35656 mW
          PE2 HMC Core 0.9V            899 mV    8093 mA    7281 mW
          PE2,3 HMC Memory 1.2V       1199 mV     610 mA     732 mW
          PE3 HMC Core 0.9V            899 mV    7710 mA    6937 mW
          PE2,3 HMC Serdes 1.2V       1199 mV   21500 mA   25812 mW
          VDD 3.3V                    3300 mV    7937 mA   26187 mW
          VDD 1.5V                    1499 mV    3234 mA    4851 mW
          VDD 2.5V                    2449 mV    4539 mA   11109 mW
          PE4 Core 0.9V                874 mV   29914 mA   26183 mW
          PE5 Core 0.9V                874 mV   29820 mA   26031 mW
          PE4 Serdes 1.0V             1020 mV   43968 mA   44843 mW
          PE5 Serdes 1.0V             1019 mV   27453 mA   28031 mW
          PE4 HMC Core 0.9V            900 mV    7937 mA    7140 mW
          PE4,5 HMC Memory 1.2V       1200 mV    1185 mA    1421 mW
          PE5 HMC Core 0.9V            899 mV    8718 mA    7843 mW
          PE4,5 HMC Serdes 1.2V       1199 mV   21125 mA   25343 mW
          LCPU platform 1.1V          1099 mV    3777 mA    4156 mW
```

```
        LCPU core 1.0V              1000 mV    9062 mA    9062 mW
        BCM core 1.0V               1000 mV    9328 mA    9328 mW
        BCM & PEX Serdes 1.0V        999 mV    4125 mA    4125 mW
        12V                        12311 mV   53347 mA  660345 mW
FPC 3 status:
  State                     Online
  FPC 3 Intake-A Temp Sensor 43 degrees C / 109 degrees F
  FPC 3 Intake-B Temp Sensor 30 degrees C / 86 degrees F
  FPC 3 Exhaust-A Temp Sensor48 degrees C / 118 degrees F
  FPC 3 Exhaust-B Temp Sensor49 degrees C / 120 degrees F
  FPC 3 Exhaust-C Temp Sensor47 degrees C / 116 degrees F
  FPC 3 PE0 Temp Sensor      48 degrees C / 118 degrees F
  FPC 3 PE1 Temp Sensor      55 degrees C / 131 degrees F
  FPC 3 PE2 Temp Sensor      47 degrees C / 116 degrees F
  FPC 3 PE3 Temp Sensor      54 degrees C / 129 degrees F
  FPC 3 PE4 Temp Sensor      48 degrees C / 118 degrees F
  FPC 3 PE5 Temp Sensor      58 degrees C / 136 degrees F
  FPC 3 LCPU Temp Sensor     46 degrees C / 114 degrees F
  Power
        PE0 Core 0.9V                899 mV   29695 mA   26718 mW
        PE1 Core 0.9V                899 mV   29695 mA   26710 mW
        PE0 Serdes 1.0V             1020 mV   40156 mA   40906 mW
        PE1 Serdes 1.0V             1020 mV   35281 mA   35968 mW
        PE0 HMC Core 0.9V            900 mV    7492 mA    6742 mW
        PE0,1 HMC Memory 1.2V       1199 mV     569 mA     683 mW
        PE1 HMC Core 0.9V            899 mV    7570 mA    6812 mW
        PE0,1 HMC Serdes 1.2V       1199 mV   20562 mA   24656 mW
        PE2 Core 0.9V                899 mV   29734 mA   26765 mW
        PE3 Core 0.9V                900 mV   29960 mA   26968 mW
        PE2 Serdes 1.0V             1019 mV   37718 mA   38500 mW
        PE3 Serdes 1.0V             1020 mV   35250 mA   35937 mW
        PE2 HMC Core 0.9V            899 mV    7750 mA    6976 mW
        PE2,3 HMC Memory 1.2V       1200 mV     546 mA     656 mW
        PE3 HMC Core 0.9V            899 mV    7718 mA    6945 mW
        PE2,3 HMC Serdes 1.2V       1199 mV   20625 mA   24750 mW
        VDD 3.3V                    3299 mV    5917 mA   19515 mW
        VDD 1.5V                    1499 mV    4015 mA    6015 mW
        VDD 2.5V                    2449 mV    4335 mA   10625 mW
        PE4 Core 0.9V                899 mV   29835 mA   26875 mW
        PE5 Core 0.9V                924 mV   30554 mA   28277 mW
        PE4 Serdes 1.0V             1019 mV   43281 mA   44187 mW
        PE5 Serdes 1.0V             1020 mV   27140 mA   27703 mW
        PE4 HMC Core 0.9V            899 mV    7476 mA    6726 mW
        PE4,5 HMC Memory 1.2V       1199 mV     531 mA     637 mW
        PE5 HMC Core 0.9V            899 mV    7539 mA    6781 mW
        PE4,5 HMC Serdes 1.2V       1199 mV   20375 mA   24468 mW
        LCPU platform 1.1V          1099 mV    3453 mA    3796 mW
        LCPU core 1.0V               999 mV    8984 mA    8984 mW
        BCM core 1.0V                999 mV    7929 mA    7921 mW
        BCM & PEX Serdes 1.0V       1000 mV    4046 mA    4046 mW
        12V                        12351 mV   51918 mA  644880 mW
FPC 5 status:
  State                     Online
  FPC 5 Intake-A Temp Sensor Failed
  FPC 5 Intake-B Temp Sensor Failed
  FPC 5 Exhaust-A Temp Sensor41 degrees C / 105 degrees F
  FPC 5 Exhaust-B Temp Sensor41 degrees C / 105 degrees F
  FPC 5 Exhaust-C Temp Sensor42 degrees C / 107 degrees F
  FPC 5 PE0 Temp Sensor      47 degrees C / 116 degrees F
  FPC 5 PE1 Temp Sensor      49 degrees C / 120 degrees F
  FPC 5 PE2 Temp Sensor      53 degrees C / 127 degrees F
```

```
  FPC 5 LCPU Temp Sensor     Failed
  Power
         PE0 Core 0.9V                923 mV   30976 mA   28578 mW
         PE0 HMC0 Core 0.9V           899 mV   10093 mA    9078 mW
         PE1 Core 0.9V                897 mV   29398 mA   26414 mW
         PE1 HMC0 Core 0.9V           899 mV    9734 mA    8750 mW
         PE2 Core 0.9V                922 mV   30226 mA   27886 mW
         PE2 HMC0 Core 0.9V           899 mV    9984 mA    8968 mW
         PE0 Serdes 1.0V             1019 mV   29296 mA   29890 mW
         PE1 Serdes 1.0V             1020 mV   28687 mA   29296 mW
         PE2 Serdes 1.0V             1020 mV   28187 mA   28765 mW
         LCPU Platform 1.1V          1100 mV    3664 mA    4031 mW
         LCPU Core 1.0V               999 mV    9125 mA    9125 mW
         PHY VDD B 1.0V               999 mV   15593 mA   15593 mW
         PHY VDD A 1.0V              1000 mV   15453 mA   15453 mW
         BCM Core 1.0V                999 mV    7773 mA    7765 mW
         BCM PEX 1.0V                1000 mV    3460 mA    3464 mW
         HMC Core 1.2V               1199 mV    1328 mA    1628 mW
         HMC Serdes 1.2V             1199 mV   32203 mA   38625 mW
         VDD 1.5V                    1499 mV    2675 mA    4007 mW
         VDD 2.5V                    2450 mV    3675 mA    9000 mW
         VDD 3.3V                    3300 mV    1814 mA    5980 mW
         12V                        12272 mV   29045 mA  361369 mW
FPC 6 status:
  State                      Online
  FPC 6 Intake-A Temp Sensor 41 degrees C / 105 degrees F
  FPC 6 Intake-B Temp Sensor 37 degrees C / 98 degrees F
  FPC 6 Exhaust-A Temp Sensor40 degrees C / 104 degrees F
  FPC 6 Exhaust-B Temp Sensor40 degrees C / 104 degrees F
  FPC 6 Exhaust-C Temp Sensor40 degrees C / 104 degrees F
  FPC 6 PE0 Temp Sensor      45 degrees C / 113 degrees F
  FPC 6 PE1 Temp Sensor      47 degrees C / 116 degrees F
  FPC 6 PE2 Temp Sensor      51 degrees C / 123 degrees F
  FPC 6 LCPU Temp Sensor     41 degrees C / 105 degrees F
  Power
         PE0 Core 0.9V                897 mV   30214 mA   27179 mW
         PE0 HMC0 Core 0.9V           899 mV   10000 mA    8984 mW
         PE1 Core 0.9V                873 mV   29332 mA   25601 mW
         PE1 HMC0 Core 0.9V           899 mV    9828 mA    8828 mW
         PE2 Core 0.9V                898 mV   30781 mA   27675 mW
         PE2 HMC0 Core 0.9V           899 mV   10328 mA    9296 mW
         PE0 Serdes 1.0V             1019 mV   28921 mA   29531 mW
         PE1 Serdes 1.0V             1020 mV   29437 mA   30046 mW
         PE2 Serdes 1.0V             1019 mV   29671 mA   30281 mW
         LCPU Platform 1.1V          1100 mV    3671 mA    4039 mW
         LCPU Core 1.0V              1000 mV    8218 mA    8187 mW
         PHY VDD B 1.0V              1000 mV   15984 mA   15984 mW
         PHY VDD A 1.0V               999 mV   16093 mA   16093 mW
         BCM Core 1.0V               1000 mV    8046 mA    8062 mW
         BCM PEX 1.0V                1000 mV    3500 mA    3500 mW
         HMC Core 1.2V               1199 mV    1327 mA    1579 mW
         HMC Serdes 1.2V             1199 mV   33031 mA   39593 mW
         VDD 1.5V                    1499 mV    2722 mA    4078 mW
         VDD 2.5V                    2449 mV    3539 mA    8671 mW
         VDD 3.3V                    3299 mV    8082 mA   26656 mW
         12V                        12311 mV   31124 mA  385270 mW
```

show chassis environment fpc (PTX10016 router)

```
user@host> show chassis environment fpc
```

```
FPC 1 status:
  State                      Online
  FPC 1 Intake-A Temp Sensor 36 degrees C / 96 degrees F
  FPC 1 Intake-B Temp Sensor 32 degrees C / 89 degrees F
  FPC 1 Exhaust-A Temp Sensor37 degrees C / 98 degrees F
  FPC 1 Exhaust-B Temp Sensor36 degrees C / 96 degrees F
  FPC 1 Exhaust-C Temp Sensor36 degrees C / 96 degrees F
  FPC 1 PE0 Temp Sensor      45 degrees C / 113 degrees F
  FPC 1 PE1 Temp Sensor      46 degrees C / 114 degrees F
  FPC 1 PE2 Temp Sensor      53 degrees C / 127 degrees F
  FPC 1 LCPU Temp Sensor     35 degrees C / 95 degrees F
  Power
         PE0 Core 0.9V                897 mV   28992 mA   26027 mW
         PE0 HMC0 Core 0.9V           899 mV   10156 mA    9156 mW
         PE1 Core 0.9V                871 mV   28800 mA   25164 mW
         PE1 HMC0 Core 0.9V           899 mV   10125 mA    9109 mW
         PE2 Core 0.9V                898 mV   29914 mA   26906 mW
         PE2 HMC0 Core 0.9V           899 mV   10343 mA    9296 mW
         PE0 Serdes 1.0V             1019 mV   27515 mA   28093 mW
         PE1 Serdes 1.0V             1020 mV   27968 mA   28546 mW
         PE2 Serdes 1.0V             1019 mV   27796 mA   28359 mW
         LCPU Platform 1.1V          1100 mV    3347 mA    3289 mW
         LCPU Core 1.0V              1000 mV    7960 mA    7960 mW
         PHY VDD B 1.0V              1000 mV   16437 mA   16437 mW
         PHY VDD A 1.0V               999 mV   15656 mA   15656 mW
         BCM Core 1.0V               1000 mV    7289 mA    7335 mW
         BCM PEX 1.0V                 999 mV    3453 mA    3453 mW
         HMC Core 1.2V               1199 mV    1218 mA    1453 mW
         HMC Serdes 1.2V             1199 mV   32093 mA   38562 mW
         VDD 1.5V                    1500 mV    2859 mA    4289 mW
         VDD 2.5V                    2449 mV    3875 mA    9500 mW
         VDD 3.3V                    3299 mV    2806 mA    9257 mW
         12V                        12351 mV   28569 mA  354877 mW
FPC 3 status:
  State                      Online
  FPC 3 Intake-A Temp Sensor 35 degrees C / 95 degrees F
  FPC 3 Intake-B Temp Sensor 31 degrees C / 87 degrees F
  FPC 3 Exhaust-A Temp Sensor36 degrees C / 96 degrees F
  FPC 3 Exhaust-B Temp Sensor34 degrees C / 93 degrees F
  FPC 3 Exhaust-C Temp Sensor33 degrees C / 91 degrees F
  FPC 3 PE0 Temp Sensor      43 degrees C / 109 degrees F
  FPC 3 PE1 Temp Sensor      45 degrees C / 113 degrees F
  FPC 3 PE2 Temp Sensor      49 degrees C / 120 degrees F
  FPC 3 LCPU Temp Sensor     35 degrees C / 95 degrees F
  Power
         PE0 Core 0.9V                897 mV   28832 mA   25871 mW
         PE0 HMC0 Core 0.9V           899 mV   10359 mA    9328 mW
         PE1 Core 0.9V                873 mV   28230 mA   24671 mW
         PE1 HMC0 Core 0.9V           899 mV   10468 mA    9421 mW
         PE2 Core 0.9V                898 mV   29539 mA   26539 mW
         PE2 HMC0 Core 0.9V           899 mV   10656 mA    9593 mW
         PE0 Serdes 1.0V             1020 mV   27484 mA   28031 mW
         PE1 Serdes 1.0V             1019 mV   27515 mA   28078 mW
         PE2 Serdes 1.0V             1020 mV   27625 mA   28187 mW
         LCPU Platform 1.1V          1099 mV    3050 mA    3355 mW
         LCPU Core 1.0V               999 mV    7820 mA    7804 mW
         PHY VDD B 1.0V               999 mV   15406 mA   15406 mW
         PHY VDD A 1.0V              1000 mV   14953 mA   14953 mW
         BCM Core 1.0V               1000 mV    7648 mA    7648 mW
         BCM PEX 1.0V                1000 mV    3531 mA    3531 mW
         HMC Core 1.2V               1200 mV    1234 mA    1476 mW
```

```
        HMC Serdes 1.2V             1199 mV   34671 mA   41593 mW
        VDD 1.5V                    1499 mV    3484 mA    5226 mW
        VDD 2.5V                    2449 mV    3218 mA    7890 mW
        VDD 3.3V                    3299 mV    2468 mA    8148 mW
        12V                        12311 mV   28785 mA  355950 mW
FPC 6 status:
  State                     Online
  FPC 6 Intake-A Temp Sensor 34 degrees C / 93 degrees F
  FPC 6 Intake-B Temp Sensor 31 degrees C / 87 degrees F
  FPC 6 Exhaust-A Temp Sensor34 degrees C / 93 degrees F
  FPC 6 Exhaust-B Temp Sensor35 degrees C / 95 degrees F
  FPC 6 Exhaust-C Temp Sensor35 degrees C / 95 degrees F
  FPC 6 PE0 Temp Sensor      42 degrees C / 107 degrees F
  FPC 6 PE1 Temp Sensor      43 degrees C / 109 degrees F
  FPC 6 PE2 Temp Sensor      47 degrees C / 116 degrees F
  FPC 6 LCPU Temp Sensor     34 degrees C / 93 degrees F
  Power
        PE0 Core 0.9V                922 mV   29394 mA   27160 mW
        PE0 HMC0 Core 0.9V           899 mV   10078 mA    9062 mW
        PE1 Core 0.9V                923 mV   29636 mA   27304 mW
        PE1 HMC0 Core 0.9V           899 mV    9890 mA    8890 mW
        PE2 Core 0.9V                898 mV   29734 mA   26757 mW
        PE2 HMC0 Core 0.9V           899 mV    9968 mA    8968 mW
        PE0 Serdes 1.0V             1020 mV   26968 mA   27515 mW
        PE1 Serdes 1.0V             1019 mV   27421 mA   27984 mW
        PE2 Serdes 1.0V             1019 mV   27625 mA   28171 mW
        LCPU Platform 1.1V          1099 mV    3230 mA    4742 mW
        LCPU Core 1.0V               999 mV    8171 mA    8171 mW
        PHY VDD B 1.0V              1000 mV   15671 mA   15687 mW
        PHY VDD A 1.0V               999 mV   15703 mA   15703 mW
        BCM Core 1.0V                999 mV    7500 mA    7492 mW
        BCM PEX 1.0V                1000 mV    3480 mA    3468 mW
        HMC Core 1.2V               1199 mV    1199 mA    1440 mW
        HMC Serdes 1.2V             1199 mV   31046 mA   37250 mW
        VDD 1.5V                    1499 mV    2804 mA    4203 mW
        VDD 2.5V                    2449 mV    3746 mA    9171 mW
        VDD 3.3V                    3300 mV    3173 mA   10476 mW
        12V                        12311 mV   28786 mA  355654 mW
FPC 8 status:
  State                     Online
  FPC 8 Intake-A Temp Sensor 34 degrees C / 93 degrees F
  FPC 8 Intake-B Temp Sensor 30 degrees C / 86 degrees F
  FPC 8 Exhaust-A Temp Sensor37 degrees C / 98 degrees F
  FPC 8 Exhaust-B Temp Sensor37 degrees C / 98 degrees F
  FPC 8 Exhaust-C Temp Sensor37 degrees C / 98 degrees F
  FPC 8 PE0 Temp Sensor      42 degrees C / 107 degrees F
  FPC 8 PE1 Temp Sensor      44 degrees C / 111 degrees F
  FPC 8 PE2 Temp Sensor      47 degrees C / 116 degrees F
  FPC 8 LCPU Temp Sensor     33 degrees C / 91 degrees F
  Power
        PE0 Core 0.9V                897 mV   29382 mA   26437 mW
        PE0 HMC0 Core 0.9V           899 mV   10265 mA    9250 mW
        PE1 Core 0.9V                872 mV   28867 mA   25175 mW
        PE1 HMC0 Core 0.9V           899 mV   10171 mA    9109 mW
        PE2 Core 0.9V                899 mV   30210 mA   27214 mW
        PE2 HMC0 Core 0.9V           900 mV   10187 mA    9171 mW
        PE0 Serdes 1.0V             1020 mV   27843 mA   28421 mW
        PE1 Serdes 1.0V             1020 mV   28265 mA   28828 mW
        PE2 Serdes 1.0V             1019 mV   28406 mA   29000 mW
        LCPU Platform 1.1V          1099 mV    3000 mA    3300 mW
        LCPU Core 1.0V              1000 mV    7937 mA    7937 mW
```

```
          PHY VDD B 1.0V              1000 mV   15843 mA   15843 mW
          PHY VDD A 1.0V              1000 mV   15250 mA   15250 mW
          BCM Core 1.0V                999 mV    6914 mA    6898 mW
          BCM PEX 1.0V                 999 mV    3445 mA    3445 mW
          HMC Core 1.2V               1199 mV    1162 mA    1390 mW
          HMC Serdes 1.2V             1199 mV   33437 mA   40125 mW
          VDD 1.5V                    1499 mV    2851 mA    4273 mW
          VDD 2.5V                    2450 mV    3867 mA    9484 mW
          VDD 3.3V                    3300 mV    3258 mA   10753 mW
          12V                        12338 mV   28656 mA  356171 mW
FPC 9 status:
  State                      Online
  FPC 9 Intake-A Temp Sensor 44 degrees C / 111 degrees F
  FPC 9 Intake-B Temp Sensor 28 degrees C / 82 degrees F
  FPC 9 Exhaust-A Temp Sensor51 degrees C / 123 degrees F
  FPC 9 Exhaust-B Temp Sensor52 degrees C / 125 degrees F
  FPC 9 Exhaust-C Temp Sensor48 degrees C / 118 degrees F
  FPC 9 PE0 Temp Sensor      52 degrees C / 125 degrees F
  FPC 9 PE1 Temp Sensor      65 degrees C / 149 degrees F
  FPC 9 PE2 Temp Sensor      50 degrees C / 122 degrees F
  FPC 9 PE3 Temp Sensor      65 degrees C / 149 degrees F
  FPC 9 PE4 Temp Sensor      50 degrees C / 122 degrees F
  FPC 9 PE5 Temp Sensor      67 degrees C / 152 degrees F
  FPC 9 LCPU Temp Sensor     45 degrees C / 113 degrees F
  Power
          PE0 Core 0.9V                875 mV   28316 mA   24808 mW
          PE1 Core 0.9V                875 mV   28546 mA   24996 mW
          PE0 Serdes 1.0V             1019 mV   38906 mA   39687 mW
          PE1 Serdes 1.0V             1020 mV   33078 mA   33781 mW
          PE0 HMC Core 0.9V            899 mV    7718 mA    6945 mW
          PE0,1 HMC Memory 1.2V       1199 mV     579 mA     695 mW
          PE1 HMC Core 0.9V            899 mV    7289 mA    6570 mW
          PE0,1 HMC Serdes 1.2V       1199 mV   20187 mA   24250 mW
          PE2 Core 0.9V                924 mV   29062 mA   26894 mW
          PE3 Core 0.9V                900 mV   28914 mA   26039 mW
          PE2 Serdes 1.0V             1020 mV   36375 mA   37093 mW
          PE3 Serdes 1.0V             1019 mV   32640 mA   33296 mW
          PE2 HMC Core 0.9V            900 mV    7695 mA    6921 mW
          PE2,3 HMC Memory 1.2V       1199 mV     562 mA     674 mW
          PE3 HMC Core 0.9V            899 mV    7554 mA    6796 mW
          PE2,3 HMC Serdes 1.2V       1199 mV   20156 mA   24218 mW
          VDD 3.3V                    3300 mV    8964 mA   29609 mW
          VDD 1.5V                    1499 mV    3968 mA    5945 mW
          VDD 2.5V                    2449 mV    4414 mA   10890 mW
          PE4 Core 0.9V                900 mV   28527 mA   25679 mW
          PE5 Core 0.9V                899 mV   28902 mA   26035 mW
          PE4 Serdes 1.0V             1019 mV   41281 mA   42125 mW
          PE5 Serdes 1.0V             1019 mV   25781 mA   26328 mW
          PE4 HMC Core 0.9V            900 mV    7382 mA    6648 mW
          PE4,5 HMC Memory 1.2V       1199 mV     626 mA     750 mW
          PE5 HMC Core 0.9V            899 mV    7562 mA    6796 mW
          PE4,5 HMC Serdes 1.2V       1199 mV   20312 mA   24375 mW
          LCPU platform 1.1V          1099 mV    3687 mA    4054 mW
          LCPU core 1.0V              1000 mV    9000 mA    9000 mW
          BCM core 1.0V                999 mV    7843 mA    7835 mW
          BCM & PEX Serdes 1.0V        999 mV    4062 mA    4062 mW
          12V                        12417 mV   51659 mA  643215 mW
```

show chassis environment FPC 1 (MX Routers with Media Services Blade [MSB])

```
user@switch> show chassis environment fpc 1
```



```
FPC 1 status:
  State                       Online
  Temperature Intake          36 degrees C / 96 degrees F
  Temperature Exhaust A       39 degrees C / 102 degrees F
  Temperature LU TSen         52 degrees C / 125 degrees F
  Temperature LU Chip         54 degrees C / 129 degrees F
  Temperature XM TSen         52 degrees C / 125 degrees F
  Temperature XM Chip         60 degrees C / 140 degrees F
  Temperature PCIe TSen       52 degrees C / 125 degrees F
  Temperature PCIe Chip       69 degrees C / 156 degrees F
  Power
    MPC-BIAS3V3-zl2106         3302 mV
    MPC-VDD3V3-zl6100          3325 mV
    MPC-AVDD1V0-zl6100         1007 mV
    MPC-PCIE_1V0-zl6100         904 mV
    MPC-LU0_1V0-zl2004          996 mV
    MPC-VDD_1V5-zl2004         1498 mV
    MPC-12VA-BMR453           11733 mV
    MPC-12VB-BMR453           11728 mV
    MPC-XM_0V9-vt273m           900 mV
  I2C Slave Revision          81
```

show chassis environment fpc (EX9251 Switches)

```
user@switch> show chassis environment fpc
FPC 0 status:
  State                       Online
  Power
  I2C Slave Revision          0
```

show chassis environment fpc (EX9253 Switches)

```
user@switch> show chassis environment fpc
FPC 0 status:
  State                       Online
  FPC 0 Intake Temp Sensor    32 degrees C / 89 degrees F
  FPC 0 Exhaust-A Temp Sensor60 degrees C / 140 degrees F
  FPC 0 Exhaust-B Temp Sensor48 degrees C / 118 degrees F
  Power
  I2C Slave Revision          13
FPC 1 status:
  State                       Online
  FPC 1 Intake Temp Sensor    30 degrees C / 86 degrees F
  FPC 1 Exhaust-A Temp Sensor60 degrees C / 140 degrees F
  FPC 1 Exhaust-B Temp Sensor50 degrees C / 122 degrees F
  Power
  I2C Slave Revision          13
```

show chassis environment pem

List of Syntax

Syntax

show chassis environment pem
<*slot*>

Syntax (ACX4000 Router)

show chassis environment pem

Syntax (TX Matrix Routers)

show chassis environment pem
<lcc *number* | scc>
<*slot*>

Syntax (TX Matrix Plus Routers)

show chassis environment pem
<lcc *number* | sfc *number*>
<*slot*>

Syntax (MX Series Router)

show chassis environment pem
<*slot*>
<all-members>
<local>
<member *member-id*>

Syntax (PTX Series Router)

show chassis environment pem
<*slot*>
<all-members>
<local>
<member *member-id*>

Syntax (MX104 Universal Routing Platforms)

show chassis environment pem
<*slot*>
<satellite [fpc-slot *slot-id* |device-alias *alias-name*]

Syntax (MX10003 , MX204, and MX10008 Universal Routing Platforms)

show chassis environment pem
<*slot*>

Syntax (QFX Series)

show chassis environment pem
<*slot* (interconnect-device *name slot*) | (node-device *name*)>

Syntax (OCX Series)

show chassis environment pem
<*slot*>

Syntax (EX9251, EX9253 Switches)

show chassis environment pem
<*slot*>

Release Information

Command introduced before Junos OS Release 7.4.
Command introduced in Junos OS Release 11.3 for the QFX Series.
Command introduced in Junos OS Release 12.3R2 for EX Series.
Command introduced in Junos OS Release 13.2 for MX104 Universal Routing Platforms.
Command introduced in Junos OS Release 14.1X53-D20 for the OCX Series.
satellite option introduced in Junos OS Release 14.2R3.
Command introduced in Junos OS Release 17.2 for PTX10008 Routers.
Command introduced in Junos OS Release 17.3 for MX10003 Universal Routing Platforms.
Command introduced in Junos OS Release 17.4 for MX204 Universal Routing Platforms.
Command introduced in Junos OS Release 17.3 for MX150 Router Appliance.
Command introduced in Junos OS Release 18.1R1 for EX9251 Switches.
Command introduced in Junos OS Release 18.2 for EX9253 Switches.
Command introduced in Junos OS Release 18.2R1 for MX10008 Routers

Description

Display Power Entry Module (PEM) environmental status information.

NOTE: The new high-capacity (4100W) enhanced DC PEM on MX960 routers includes a new design that can condition the input voltage. This results in the output voltage differing from the input voltage. The earlier generation of DC PEMs coupled the input power directly to the output, thereby making it safe to assume that the output voltage was equal to the input voltage.

Options

none—Display environmental information about both PEMs. For the TX Matrix router, display environmental information about the PEMs, the TX Matrix router, and its attached T640 routers. For the TX Matrix Plus router, display environmental information about the PEMs, the TX Matrix Plus router, and its attached routers.

all-members—(MX Series routers only) (Optional) Display environmental information about the PEMs in all the member routers of the Virtual Chassis configuration.

interconnect-device *name*—(QFabric systems only) (Optional) Display chassis environmental information about the PEMs in the Interconnect device.

lcc *number*—(TX Matrix router and TX Matrix Plus router only) (Optional) Line-card chassis number.

Replace *number* with the following values depending on the LCC configuration:

- 0 through 3, when T640 routers are connected to a TX Matrix router in a routing matrix.
- 0 through 3, when T1600 routers are connected to a TX Matrix Plus router in a routing matrix.
- 0 through 7, when T1600 routers are connected to a TX Matrix Plus router with 3D SIBs in a routing matrix.
- 0, 2, 4, or 6, when T4000 routers are connected to a TX Matrix Plus router with 3D SIBs in a routing matrix.

local—(MX Series routers only) (Optional) Display environmental information about the PEM in the local Virtual Chassis member.

member *member-id*—(MX Series routers only) (Optional) Display environmental information about the PEM in the specified member of the Virtual Chassis configuration. Replace *member-id* with a value of 0 or 1.

node-device *name*—(QFabric systems only) (Optional) Display chassis environmental information about the PEMs in the Node device.

satellite [fpc-slot *slot-id* | device-alias *alias-name*]—(Junos Fusion only)(Optional) Display environmental information about the PEM in the specified satellite device in a Junos Fusion, or for all satellite devices in the Junos Fusion if no satellite devices are specified.

scc—(TX Matrix routers only) (Optional) Display environmental information about the PEM in the TX Matrix router (or switch-card chassis).

sfc—(TX Matrix Plus routers only) (Optional) Display environmental information about the PEM in the TX Matrix Plus router (or switch-fabric chassis).

slot —(Optional) Display environmental information about an individual PEM. Replace *slot* with 0 or 1.

Required Privilege Level view

Related Documentation

- show chassis hardware on page 391

List of Sample Output

Output Fields Table 12 on page 339 lists the output fields for the **show chassis environment pem** command. Output fields are listed in the approximate order in which they appear.

Table 12: show chassis environment pem Output Fields

Field Name	Field Description
PEM*slot*status	Number of the PEM slot.
State	Status of the PEM.
Temperature	Temperature of the air flowing past the PEM.
AC Input	Status of the AC input for the specified component
AC Output	Status of the AC output for the specified component.
DC input	Status of the DC input for the specified component.
DC output	Status of the DC output for the specified component.
Load	(Not available on M40e or M160 routers) Information about the load on supply, in percentage of rated current being used.
Voltage	(M120, M160, M320, T640, T1600, TX Matrix, and TX Matrix Plus routers only) Information about voltage supplied to the PEM. (MX104 routers only) Information about voltage supplied by the PEM to the system.
Current	(T640, T1600, TX Matrix, and TX Matrix Plus routers only) Information about the PEM current.

Table 12: show chassis environment pem Output Fields (continued)

Field Name	Field Description
Power	(T640, T1600, TX Matrix, and TX Matrix Plus routers only) Information about the PEM power.
SCG/CB/SIB	(T640, T1600, TX Matrix, and TX Matrix Plus routers only) SONET Clock Generator/Control Board/Switch Interface Board.
FAN	(T640, T1600, and T4000 routers with six-input DC power supply only) Information about the DC output to the fan.

Sample Output

show chassis environment pem (M40e Router)

```
user@host> show chassis environment pem
PEM 0 status:
  State                          Online
  Temperature                    OK
  AC input                       OK
  DC output                      OK
```

show chassis environment pem (M120 Router)

```
user@host> show chassis environment pem
PEM 0 status:
  State                      Online
  Temperature                OK
  DC Input:                  OK
  DC Output:                 OK
  Load                       Less than 20 percent
  Voltage:
    48.0 V input             52864 mV
    48.0 V fan supply        41655 mV
    3.3 V                     3399 mV
PEM 1 status:
  State                      Online
  Temperature                OK
  DC Input:                  OK
  DC Output:                 OK
  Load                       Less than 20 percent
  Voltage:
    48.0 V input             54537 mV
    48.0 V fan supply        42910 mV
    3.3 V                     3506 mV
```

show chassis environment pem (M160 Router)

```
user@host> show chassis environment pem
PEM 0 status:
  State                          Online
  Temperature                    OK
  DC input                       OK
  DC output                      OK
  Load                           Less than 20 percent
  Voltage:
```

```
    48.0 V input              54833 mV
    48.0 V fan supply         50549 mV
    8.0 V bias                8239 mV
    5.0 V bias                5006 mV
```

show chassis environment pem (M320 Router)

```
user@host> show chassis environment pem
PEM 2 status:
  State                           Online
  Temperature                     OK
  DC input                        OK
  Load                            Less than 40 percent
    48.0 V input            51853 mV
    48.0 V fan supply       48877 mV
    8.0 V bias               8449 mV
    5.0 V bias               4998 mV
PEM 3 status:
  State                           Online
  Temperature                     OK
  DC input                        OK
  Load                            Less than 40 percent
    48.0 V input            51717 mV
    48.0 V fan supply       49076 mV
    8.0 V bias               8442 mV
    5.0 V bias               4998 mV
```

show chassis environment pem (MX150)

```
user@host> show chassis environment pem
FPC 0 PEM 0 status:
  State                     Online
  Airflow                   Front to Back
  Temperature               OK
```

show chassis environment pem (MX104 Router)

```
user@host> show chassis environment pem
PEM 0 status:
  State                     Online
  Temperature               OK
  DC Output:                OK
  Voltage:
    12.0 V output           12281 mV
    3.3 V output             3353 mV
PEM 1 status:
  State                     Empty
```

show chassis environment pem (MX240 Router)

```
user@host> show chassis environment pem
PEM 0 status:
  State                     Online
  Temperature                OK
  DC Output:                 OK
PEM 1 status:
  State                     Online
  Temperature                OK
  DC Output:                 OK
```

show chassis environment pem (MX480 Router)

```
user@host> show chassis environment pem
PEM 0 status:
  State                      Online
  Temperature                 OK
  DC Input:                   OK
  DC Output:                  OK
  Voltage:
PEM 1 status:
  State                      Online
  Temperature                 OK
  DC Input:                   OK
  DC Output:                  OK
  Voltage:
```

show chassis environment pem (MX960 Router)

```
user@host> show chassis environment pem
PEM 2 status:
  State                      Present
PEM 3 status:
  State                      Online
  Temperature                 OK
  DC Output:                  OK
```

show chassis environment pem (MX10003 Router)

```
user@host> show chassis environment pem

PEM 0 status:
  State                      Online
  Airflow                    Front to Back
  Temperature                OK   34 degrees C / 93 degrees F
  Temperature                OK   26 degrees C / 78 degrees F
  Temperature                OK   24 degrees C / 75 degrees F
  Firmware version           0x22
  Cooling Fan                8752 RPM
  DC Output           Voltage(V) Current(A)  Power(W)  Load(%)
                          12.00     26            312      10
PEM 1 status:
  State                      Online
  Airflow                    Front to Back
  Temperature                OK   35 degrees C / 95 degrees F
  Temperature                OK   26 degrees C / 78 degrees F
  Temperature                OK   25 degrees C / 77 degrees F
  Firmware version           0x22
  Cooling Fan                8480 RPM
  DC Output           Voltage(V) Current(A)  Power(W)  Load(%)
                          12.00     27            324      11
PEM 2 status:
  State                      Online
  Airflow                    Front to Back
  Temperature                OK   37 degrees C / 98 degrees F
  Temperature                OK   29 degrees C / 84 degrees F
  Temperature                OK   25 degrees C / 77 degrees F
  Firmware version           0x22
  Cooling Fan                8656 RPM
  DC Output           Voltage(V) Current(A)  Power(W)  Load(%)
                          12.00     25            300      10
```

```
PEM 3 status:
  State                     Online
  Airflow                   Front to Back
  Temperature               OK   35 degrees C / 95 degrees F
  Temperature               OK   26 degrees C / 78 degrees F
  Temperature               OK   25 degrees C / 77 degrees F
  Firmware version          0x22
  Cooling Fan               8448 RPM
  DC Output          Voltage(V) Current(A)  Power(W)  Load(%)
                         12.00     26            312      10
PEM 4 status:
  State                     Empty
PEM 5 status:
  State                     Empty
```

show chassis environment pem (MX204 Router)

```
user@host> show chassis environment pem

PEM 0 status:
  State                     Empty
PEM 1 status:
  State                     Online
  Airflow                   Front to Back
  Temperature               OK   48 degrees C / 118 degrees F
  Temperature               OK   51 degrees C / 123 degrees F
  Fan Sensor                5400 RPM
  DC Output          Voltage(V) Current(A)  Power(W)  Load(%)
                         11.94     16            191      29
```

show chassis environment pem (MX10008 Router)

```
user@host> show chassis environment pem
PEM 0 status:
  State                     Online
  Airflow                   Front to Back
  Temperature                            OK   29 degrees C / 84 degrees F
  Firmware version          0x36
  Fan 0                     5880 RPM
  DC Output          Voltage(V) Current(A)  Power(W)  Load(%)
                       12.00       104           1248     46
PEM 1 status:
  State                     Online
  Airflow                   Front to Back
  Temperature                            OK   27 degrees C / 80 degrees F
  Firmware version          0x36
  Fan 0                     5940 RPM
  DC Output          Voltage(V) Current(A)  Power(W)  Load(%)
                       12.00       104           1248     46
PEM 2 status:
  State                     Online
  Airflow                   Front to Back
  Temperature                            OK   30 degrees C / 86 degrees F
  Firmware version          0x36
  Fan 0                     5940 RPM
  DC Output          Voltage(V) Current(A)  Power(W)  Load(%)
                       12.00       105           1260     46
PEM 3 status:
  State                     Present
PEM 4 status:
```

```
  State                       Present
PEM 5 status:
  State                       Present
```

show chassis environment pem (PTX10016 Router)

```
user@host> show chassis environment pem
PEM 0 status:
  State                       Online
  Airflow                     Front to Back
  Temperature                 OK   21 degrees C / 69 degrees F
  Firmware version            0x36
  Fan 0                       5760 RPM
  DC Output           Voltage(V) Current(A)  Power(W)  Load(%)
                          12.00     51            612      22
PEM 1 status:
  State                       Online
  Airflow                     Front to Back
  Temperature                 OK   23 degrees C / 73 degrees F
  Firmware version            0x36
  Fan 0                       5760 RPM
  DC Output           Voltage(V) Current(A)  Power(W)  Load(%)
                          12.00     52            624      23
PEM 2 status:
  State                       Online
  Airflow                     Front to Back
  Temperature                 OK   23 degrees C / 73 degrees F
  Firmware version            0x36
  Fan 0                       5760 RPM
  DC Output           Voltage(V) Current(A)  Power(W)  Load(%)
                          12.00     51            612      22
PEM 3 status:
  State                       Online
  Airflow                     Front to Back
  Temperature                 OK   21 degrees C / 69 degrees F
  Firmware version            0x36
  Fan 0                       5760 RPM
  DC Output           Voltage(V) Current(A)  Power(W)  Load(%)
                          12.00     51            612      22
PEM 4 status:
  State                       Online
  Airflow                     Front to Back
  Temperature                 OK   22 degrees C / 71 degrees F
  Firmware version            0x36
  Fan 0                       5760 RPM
  DC Output           Voltage(V) Current(A)  Power(W)  Load(%)
                          12.00     52            624      23
PEM 5 status:
  State                       Online
  Airflow                     Front to Back
  Temperature                 OK   24 degrees C / 75 degrees F
  Firmware version            0x36
  Fan 0                       5700 RPM
  DC Output           Voltage(V) Current(A)  Power(W)  Load(%)
                          12.00     51            612      22
PEM 6 status:
  State                       Online
  Airflow                     Front to Back
  Temperature                 OK   21 degrees C / 69 degrees F
  Firmware version            0x36
  Fan 0                       5700 RPM
```



```
  DC Output           Voltage(V) Current(A)  Power(W)  Load(%)
                          12.00     50            600      22
```

show chassis environment pem (T320 Router)

```
user@host> show chassis environment pem
PEM 0 status:
  State                           Online
  Temperature                     OK
  DC input:                       OK
```

show chassis environment pem (T640 Router)

```
user@host> show chassis environment pem
PEM 0 status:
  State                           Online
  Temperature                 22 degrees C / 71 degrees F
  AC input: OK
  DC output:            Voltage   Current       Power    Load
       FPC 0              56875       606          34       4
       FPC 1              57016       525          29       3
       FPC 2                  0         0           0       0
       FPC 3                  0         0           0       0
       FPC 4                  0         0           0       0
       FPC 5                  0         0           0       0
       FPC 6              57158      1581          90      12
       FPC 7                  0         0           0       0
  SCG/CB/SIB              56750      1125          63       5
```

show chassis environment pem (T4000 Router)

```
user@host> show chassis environment pem
PEM 0 status:
  State                     Online
  Temperature               33 degrees C / 91 degrees F
  DC Input:                 OK
                      Voltage(V)  Current(A)  Power(W)  Load(%)
      INPUT 0           54.625       9.812      535       22
      INPUT 1           54.625      10.250      559       23
      INPUT 2           55.125       0.125        6        0
      INPUT 3           54.500      10.062      548       22
      INPUT 4           54.750       9.375      513       21
      INPUT 5           54.750      10.187      557       23
  DC Output           Voltage(V)  Current(A)  Power(W)  Load(%)
      FPC 0             55.750      10.125      564       37
      FPC 1             51.625       0.000        0        0
      FPC 2             52.000       0.000        0        0
      FPC 3             55.062      10.437      574       38
      FPC 4             52.125       0.000        0        0
      FPC 5             55.000       9.375      515       34
      FPC 6             55.187       9.687      534       35
      FPC 7             51.437       0.000        0        0
      SCG/CB/SIB        55.375      15.750      872       35
      FAN               54.562      14.750      804       42
```

show chassis environment pem (T640/T1600/T4000 Routers With Six-Input DC Power Supply)

```
user@host> show chassis environment pem
PEM 1 status:
  State                     Online
```

```
  Temperature                36 degrees C / 96 degrees F
  DC Input:                  OK
                       Voltage(V)  Current(A)  Power(W)  Load(%)
      INPUT 0             0.000       0.000        0        0
      INPUT 1            54.875       3.812      209       27
      INPUT 2            55.375       3.937      218       29
      INPUT 3            54.625       3.750      204       27
      INPUT 4            55.125       3.375      186       24
      INPUT 5            55.125       3.375      186       24
  DC Output            Voltage(V)  Current(A)  Power(W)  Load(%)
      FPC 0              52.312       0.000        0        0
      FPC 1              52.687       0.000        0        0
      FPC 2              52.812       0.000        0        0
      FPC 3              55.812       7.062      394       52
      FPC 4              52.625       0.000        0        0
      FPC 5              52.625       0.000        0        0
      FPC 6              52.750       0.000        0        0
      FPC 7              52.750       0.000        0        0
      SCG/CB/SIB         55.937      11.937      667       55
      FAN                55.812       4.937      275       36
```

show chassis environment pem lcc (TX Matrix Routing Matrix)

```
user@host> show chassis environment pem 0 lcc 0
lcc0-re0:
--------------------------------------------------------------------------
PEM 0 status:
  State                            Present
  Temperature                   27 degrees C / 80 degrees F
  DC input:                        Check
  DC output:             Voltage   Current       Power    Load
       FPC 0                   0         0           0       0
       FPC 1                   0         0           0       0
       FPC 2                   0         0           0       0
       FPC 3                   0         0           0       0
       FPC 4                   0         0           0       0
       FPC 5                   0         0           0       0
       FPC 6                   0         0           0       0
       FPC 7                   0         0           0       0
  SCG/CB/SIB                   0         0           0       0
```

show chassis environment pem scc (TX Matrix Routing Matrix)

```
user@host> show chassis environment pem scc
scc-re0:
--------------------------------------------------------------------------
PEM 1 status:
  State                            Online
  Temperature                   24 degrees C / 75 degrees F
  DC input:                        OK
  DC output:             Voltage   Current       Power    Load
       SIB 0                   0         0           0       0
       SIB 1                   0         0           0       0
       SIB 2                   0         0           0       0
       SIB 3               56550         0           0       0
       SIB 4               55958      6912         386      51
```

show chassis environment pem sfc (TX Matrix Plus Routing Matrix)

```
user@host> show chassis environment pem sfc 0
```

```
sfc0-re0:
--------------------------------------------------------------------------
PEM 0 status:
  State                      Online
  Temperature                35 degrees C / 95 degrees F
  DC Input:                   OK
  DC Output             Voltage   Current       Power    Load
      Channel 0           53820     14140         761      59
      Channel 1           53550     12720         681      53
      Channel 2           53840     12930         696      54
      Channel 3           53690     14990         804      63
      Channel 4           53620     15070         808      63
      Channel 5           53900     14820         798      62
      Channel 6           54120     5020          271      21
```

show chassis environment pem lcc (TX Matrix Plus Routing Matrix)

```
user@host> show chassis environment lcc 0

lcc0-re1:
--------------------------------------------------------------------------
PEM 0 status:
  State                      Online
  Temperature                38 degrees C / 100 degrees F
  DC Input:                  OK
  DC Output             Voltage   Current       Power    Load
      FPC 0               0         0             0        0
      FPC 1               0         0             0        0
      FPC 2               0         0             0        0
      FPC 3               0         0             0        0
      FPC 4               56408     7575          427      56
      FPC 5               0         0             0        0
      FPC 6               56266     7956          447      59
      FPC 7               56283     6100          343      45
      SCG/CB/SIB          55916     8950          500      41
PEM 1 status:
  State                      Present
  Temperature                35 degrees C / 95 degrees F
  DC Input:                  Check
  DC Output             Voltage   Current       Power    Load
      FPC 0               0         0             0        0
      FPC 1               0         0             0        0
      FPC 2               0         0             0        0
      FPC 3               0         0             0        0
      FPC 4               0         0             0        0
      FPC 5               0         0             0        0
      FPC 6               0         0             0        0
      FPC 7               0         0             0        0
      SCG/CB/SIB          0         0             0        0
```

show chassis environment pem node-device (QFabric System)

```
user@switch> show chassis environment pem node-device node1
FPC 0 PEM 0 status:
  State                      Check
  Airflow                    Front to Back
  Temperature                OK
  AC Input:                  OK
  DC Output           Voltage(V) Current(A)  Power(W)  Load(%)
                          12        10            120      18
```

```
FPC 0 PEM 1 status:
  State                       Online
  Airflow                     Back to Front
  Temperature                 OK
  AC Input:                   OK
  DC Output           Voltage(V) Current(A)  Power(W)  Load(%)
                          11        10           110      17
```

show chassis environment pem (QFX Series and OCX Series)

```
user@switch> show chassis environment pem
FPC 0 PEM 1 status:
  State                       Online
  Airflow                     Front to Back
  Temperature                 OK
  AC Input:                   OK
  DC Output           Voltage(V) Current(A)  Power(W)  Load(%)
                          12        17            204      31
```

show chassis environment pem interconnect-device (QFabric System)

```
user@switch> show chassis environment pem interconnect-device IC1 1
IC1 PEM 1 status:
  State                       Online
  Airflow                     Front to Back
  Temperature                 OK
  AC Input:                   OK
  DC Output           Voltage(V) Current(A)  Power(W)  Load(%)
                          12        18            216      33
```

show chassis environment pem (EX9251 Switches)

```
user@switch> show chassis environment pem
PEM 0 status:
  State                       Present
PEM 1 status:
  State                       Online
  Airflow                     Front to Back
  Temperature                 OK   36 degrees C / 96 degrees F
  Temperature                 OK   35 degrees C / 95 degrees F
  Fan Sensor                  5940 RPM
  DC Output           Voltage(V) Current(A)  Power(W)  Load(%)
                        11.85       17            201      30
```

show chassis environment pem (EX9253 Switches)

```
user@switch> show chassis environment pem
PEM 0 status:
  State                       Online
  Airflow                     Front to Back
  Temperature                 OK   56 degrees C / 132 degrees F
  Temperature                 OK   46 degrees C / 114 degrees F
  Temperature                 OK   28 degrees C / 82 degrees F
  Firmware version            04.10
  Cooling Fan                 9056 RPM
  DC Output           Voltage(V) Current(A)  Power(W)  Load(%)
                          12.00     47            564      19
PEM 1 status:
  State                       Present
PEM 2 status:
```

```
  State                       Empty
PEM 3 status:
  State                       Empty
PEM 4 status:
  State                       Present
PEM 5 status:
  State                       Online
  Airflow                     Front to Back
  Temperature                 OK   61 degrees C / 141 degrees F
  Temperature                 OK   49 degrees C / 120 degrees F
  Temperature                 OK   28 degrees C / 82 degrees F
  Firmware version            04.10
  Cooling Fan                 8656 RPM
  DC Output           Voltage(V) Current(A)  Power(W)  Load(%)
                          12.00     51            612      21
```

show chassis environment routing-engine

List of Syntax

Syntax

show chassis environment routing-engine
<*slot*>

Syntax (TX Matrix Routers)

show chassis environment routing-engine
<lcc *number* | scc>
<*slot*>

Syntax (TX Matrix Plus Routers)

show chassis environment routing-engine
<lcc *number* | sfc *number*>
<*slot*>

Syntax (MX104, MX2010, MX2020, MX10003, MX204, and MX2008 Universal Routing Platforms)

show chassis environment routing-engine
<*slot*>
<satellite [fpc-slot *slot-id* |device-alias *alias-name*]

Syntax (MX Series Routers)

show chassis environment routing-engine
<*slot*>
<all-members>
<local>
<member *member-id*>

Syntax (PTX Series Routers)

show chassis environment routing-engine
<*slot*>
<all-members>
<local>
<member *member-id*>

Syntax (QFX Series)

show chassis environment routing-engine
interconnect-device *name*

Syntax (OCX Series)

show chassis environment routing-engine

interconnect-device *name*

Syntax (ACX5048 and ACX5096 Routers)

show chassis environment routing-engine

Syntax (ACX500 Routers)

show chassis environment routing-engine

Syntax (EX9251, EX9253 Switches)

show chassis environment routing-engine

Release Information

Command introduced before Junos OS Release 7.4.
Command introduced in Junos OS Release 9.0 for EX Series switches.
sfc option introduced in Junos OS Release 9.6 for the TX Matrix Plus router.
Command introduced in Junos OS Release 11.1 for the QFX Series.
Command introduced in Junos OS Release 12.1 for the PTX Series Packet Transport Routers and T4000 Core Routers.
Command introduced in Junos OS Release 12.3 for MX2010 and MX2020 Universal Routing Platforms.
Command introduced in Junos OS Release 13.2 for MX104 Universal Routing Platforms.
Command introduced in Junos OS Release 15.1X54-D20 for ACX5048 and ACX5096 Routers.
Command introduced in Junos OS Release 17.2 for MX2008 Universal Routing Platforms.
Command introduced in Junos OS Release 17.2 for PTX10008 Routers.
Command introduced in Junos OS Release 17.3 for MX150 Router Appliance.
Command introduced in Junos OS Release 17.4 for MX204 Universal Routing Platforms.
Command introduced in Junos OS Release 17.3 for MX10003 Universal Routing Platforms.
Command introduced in Junos OS Release 18.1R1 for EX9251 Switches.
Command introduced in Junos OS Release 18.2 for EX9253 Switches.
Command introduced in Junos OS Release 18.2R1 for MX10008 Routers.

Description

Display Routing Engine environmental status information.

Options

none—Display environmental information about all Routing Engines. For a TX Matrix router, display environmental information about all Routing Engines on the TX Matrix router and its attached T640 routers. For a TX Matrix Plus router, display environmental information about all Routing Engines on the TX Matrix Plus router and its attached routers.

all-members—(MX Series routers only) (Optional) Display environmental information about the Routing Engines in all member routers in the Virtual Chassis configuration.

interconnect-device *name*—(QFabric systems only) (Optional) Display environmental information about the Routing Engines for the Interconnect device.

lcc *number*——(TX Matrix router and TX Matrix Plus router only) (Optional) Line-card chassis number.

Replace *number* with the following values depending on the LCC configuration:

- 0 through 3, when T640 routers are connected to a TX Matrix router in a routing matrix.
- 0 through 3, when T1600 routers are connected to a TX Matrix Plus router in a routing matrix.
- 0 through 7, when T1600 routers are connected to a TX Matrix Plus router with 3D SIBs in a routing matrix.
- 0, 2, 4, or 6, when T4000 routers are connected to a TX Matrix Plus router with 3D SIBs in a routing matrix.

local—(MX Series routers only) (Optional) Display environmental information about the Routing Engines in the local Virtual Chassis member.

member *member-id*—(MX Series routers only) (Optional) Display environmental information about the Routing Engines in the specified member in the Virtual Chassis configuration. Replace *member-id* with the value of 0 or 1.

satellite [fpc-slot *slot-id* | device-alias *alias-name*]—(Junos Fusion only)(Optional) Display environmental information for the specified satellite device in a Junos Fusion, or for all satellite devices in the Junos Fusion if no satellite devices are specified.

scc—(TX Matrix router only) (Optional) Display environmental information about the Routing Engine in the TX Matrix router (switch-card chassis).

sfc—(TX Matrix Plus router only) (Optional) Display environmental information about the Routing Engine in the TX Matrix Plus router (or switch-fabric chassis).

slot—(Optional) Display environmental information about an individual Routing Engine. On M10i, M20, M40e, M120, M160, M320, MX Series, MX104 routers, MX2010 routers, MX2020 routers, MX2008 routers, and T Series routers, replace *slot* with 0 or 1. On M5, M7i, M10, and M40 routers, replace *slot* with 0. On EX3200 and EX4200 standalone switches, replace *slot* with 0. On EX4200 switches in a Virtual Chassis configuration and on EX8208 and EX8216 switches, replace *slot* with 0 or 1. On the QFX3500 switch, there is only one Routing Engine, so you do not need to specify the slot number. On PTX Series Packet Transport Routers, replace *slot* with 0 or 1

Required Privilege Level

view

Related Documentation

- *request chassis routing-engine master*
- show chassis routing-engine on page 653

List of Sample Output

show chassis environment routing-engine (Nonredundant) on page 353
show chassis environment routing-engine (Redundant) on page 354
show chassis enviroenment routing-engine (MX150) on page 354

Output Fields

Table 13 on page 353 lists the output fields for the **show chassis environment routing-engine** command. Output fields are listed in the approximate order in which they appear.

Table 13: show chassis environment routing-engine Output Fields

Field Name	Field Description
Routing engine *slot* status	Number of the Routing Engine slot: 0 or 1.
State	Status of the Routing Engine: • Online Master—Routing Engine is online, operating as Master. • Online Standby—Routing Engine is online, operating as Standby. • Offline—Routing Engine is offline.
Temperature	Temperature of the air flowing past the Routing Engine.
CPU Temperature	(PTX Series and T4000 Core Routers only) Temperature of the air flowing past the Routing Engine CPU.

Sample Output

show chassis environment routing-engine (Nonredundant)

```
user@host> show chassis environment routing-engine
```

```
Routing Engine 0 status:
  State                            Online Master
  Temperature                   27 degrees C / 80 degrees
```

show chassis environment routing-engine (Redundant)

```
user@host> show chassis environment routing-engine
Route Engine 0 status:
  State:                       Online Master
  Temperature:               26 degrees C / 78 degrees F
Route Engine 1 status:
  State:                       Online Standby
  Temperature:               26 degrees C / 78 degrees F
```

show chassis enviroenment routing-engine (MX150)

```
user@ host >show chassis environment routing-engine
Routing Engine 0 status:
  State                      Online Master
  CPU Temperature            42 degrees C / 107 degrees F
```

show chassis environment routing-engine (MX104 Router)

```
user@ host >show chassis environment routing-engine
Routing Engine 0 status:
  State                      Online Master
  Temperature                34 degrees C / 93 degrees F
  CPU Temperature            43 degrees C / 109 degrees F
Routing Engine 1 status:
  State                      Online Standby
  Temperature                33 degrees C / 91 degrees F
  CPU Temperature            39 degrees C / 102 degrees F
```

show chassis environment routing-engine (MX2010 Router)

```
user@host> show chassis environment routing-engine
Routing Engine 0 status:
  State                      Online Master
  Temperature                37 degrees C / 98 degrees F
  CPU Temperature            37 degrees C / 98 degrees F
Routing Engine 1 status:
  State                      Online Standby
  Temperature                35 degrees C / 95 degrees F
  CPU Temperature            34 degrees C / 93 degrees F
```

show chassis environment routing-engine (MX2020 Router)

```
user@host> show chassis environment routing-engine
Routing Engine 0 status:
  State                      Online Master
  Temperature                35 degrees C / 95 degrees F
  CPU Temperature            34 degrees C / 93 degrees F
Routing Engine 1 status:
  State                      Online Standby
  Temperature                44 degrees C / 111 degrees F
  CPU Temperature            43 degrees C / 109 degrees F
```

show chassis environment routing-engine (MX2008 Router)

```
user@host> show chassis environment routing-engine
Routing Engine 0 status:
  State                      Online Master
  CPU Temperature            75 degrees C / 167 degrees F
Routing Engine 1 status:
  State                      Online Standby
  CPU Temperature            47 degrees C / 116 degrees F
```

show chassis environment routing-engine (TX Matrix Plus Router)

```
user@host> show chassis environment routing-engine
sfc0-re0:
--------------------------------------------------------------------------
Routing Engine 0 status:
  State                      Online Master
  Temperature                26 degrees C / 78 degrees F
Routing Engine 1 status:
  State                      Online Standby
  Temperature                28 degrees C / 82 degrees F

lcc0-re0:
--------------------------------------------------------------------------
Routing Engine 0 status:
  State                      Online Master
  Temperature                30 degrees C / 86 degrees F
Routing Engine 1 status:
  State                      Online Standby
  Temperature                29 degrees C / 84 degrees F
```

show chassis environment routing-engine (T4000 Core Router)

```
user@host> show chassis environment routing-engine
Routing Engine 0 status:
  State                      Online Master
  Temperature                33 degrees C / 91 degrees F
  CPU Temperature            50 degrees C / 122 degrees F
Routing Engine 1 status:
  State                      Online Standby
  Temperature                33 degrees C / 91 degrees F
  CPU Temperature            46 degrees C / 114 degrees F
```

show chassis environment routing-engine (QFX Series and OCX Series)

```
user@switch> show chassis environment routing-engine
Routing Engine 0 status:
  State                      Online Master
  Temperature                42 degrees C / 107 degrees F
```

show chassis environment routing-engine interconnect-device (QFabric System)

```
user@switch> show chassis environment routing-engine interconnect-device interconnect1
routing-engine interconnect-device interconnect1
Routing Engine 0 status:
  State                      Online Standby
  Temperature                52 degrees C / 125 degrees F
Routing Engine 1 status:
```

```
  State                       Online Master
  Temperature                 57 degrees C / 134 degrees F
```

show chassis environment routing-engine (PTX5000 Packet Transport Router)

```
user@switch> show chassis environment routing-engine
Routing Engine 0 status:
  State                       Online Master
  Temperature                 55 degrees C / 131 degrees F
  CPU Temperature             66 degrees C / 150 degrees F
Routing Engine 1 status:
  State                       Online Standby
  Temperature                 52 degrees C / 125 degrees F
  CPU Temperature             64 degrees C / 147 degrees F
```

show chassis environment routing-engine (PTX10008 Router)

```
user@switch> show chassis environment routing-engine
Routing Engine 0 status:
  State                       Online Master
  CPU Temperature             40 degrees C / 104 degrees F
Routing Engine 1 status:
  State                       Online Standby
  CPU Temperature             40 degrees C / 104 degrees F
```

show chassis environment routing-engine (PTX10016 Router)

```
user@switch> show chassis environment routing-engine
Routing Engine 0 status:
  State                       Online Master
  CPU Temperature             33 degrees C / 91 degrees F
Routing Engine 1 status:
  State                       Online Standby
  CPU Temperature             38 degrees C / 100 degrees F
```

show chassis environment routing-engine (ACX5048 and ACX5096 Routers)

```
user@host> show chassis environment routing-engine
Routing Engine 0 status:
  State                       Online Master
  Temperature                 33 degrees C / 91 degrees F
```

show chassis environment routing-engine (ACX500 Routers)

```
user@host> show chassis environment routing-engine
Routing Engine 0 status:
  State                       Online Master
  Temperature                 54 degrees C / 129 degrees F
```

Sample Output

show chassis environment routing-engine (PTX5000 (RE-PTX-X8-64G), MX240 (RE-S-X6-64G), MX480 (RE-S-X6-64G), MX960 (RE-S-X6-64G), MX2010 (RE-MX2K-X8-64G), MX2020 (RE-MX2K-X8-64G)

```
user@switch> show chassis environment routing-engine
Routing Engine 0 status:
  State                       Online Master
  Temperature                 37 degrees C / 98 degrees F
  CPU Temperature             52 degrees C / 125 degrees F
```

```
Routing Engine 1 status:
  State                     Online Standby
  Temperature               37 degrees C / 98 degrees F
  CPU Temperature           51 degrees C / 123 degrees F
```

show chassis environment routing-engine (MX204 Routers)

```
user@host> show chassis environment routing-engine
Routing Engine 0 status:
  State                     Online Master
```

show chassis environment routing-engine (MX10008 Routers)

```
Routing Engine 0 status:
  State                     Online Master
  CPU Temperature                        41 degrees C / 105 degrees F
Routing Engine 1 status:
  State                     Online Standby
  CPU Temperature                        40 degrees C / 104 degrees F
```

show chassis environment routing-engine (EX9251 Switches)

```
user@switch> show chassis environment routing-engine
Routing Engine 0 status:
  State                     Online Master
```

show chassis environment routing-engine (EX9253 Switches)

```
user@switch> show chassis environment routing-engine
Routing Engine 0 status:
  State                     Online Master
Routing Engine 1 status:
  State                     Present
```

show chassis fan

List of Syntax

Syntax

show chassis fan

Syntax (ACX4000 Series Router)

show chassis fan

Syntax (ACX5048 and ACX5096 Routers)

show chassis fan

Syntax (MX Series Routers)

show chassis fan
<all-members>
<local>
<member *member-id*>

Syntax (T Series Routers)

show chassis fan

Syntax (MX104, MX204, MX2010, MX2020, MX2008, and MX10003 Universal Routing Platform)

show chassis fan
<satellite [slot-id *slot-id* |device-alias *alias-name*]>

Syntax (MX10003 Universal Routing Platform)

show chassis fan

Syntax (PTX Series)

show chassis fan

Syntax (QFX Series)

show chassis fan
<interconnect-device *name*>

Syntax (OCX Series)

show chassis fan

Syntax (TX Matrix Router)

show chassis fan
<lcc *number* | scc>

Syntax (TX Matrix Plus Router)

show chassis fan
<lcc *number* | sfc *number*>

Syntax (EX9251, EX9253 Switches)

show chassis fan

Release Information

Command introduced in Junos OS Release 10.0 on MX Series 5G Universal Routing Platforms, M120 routers, and M320 routers, T320 routers, T640 routers, T1600 routers, TX Matrix Routers, and TX Matrix Plus routers.
Command introduced in Junos OS Release 11.1 for the QFX Series.
Command introduced in Junos OS Release 11.4 for EX Series switches.
Command introduced in Junos OS Release 12.1 for T4000 routers.
Command introduced in Junos OS Release 12.3 for PTX5000 Packet Transport Routers.
Command introduced in Junos OS Release 12.3 for MX2010 and MX2020 Universal Routing Platforms, and ACX Series Routers.
Command introduced in Junos OS Release 13.2 for MX104 Universal Routing Platforms.
Command introduced in Junos OS Release 14.1X53-D20 for the OCX Series.
satellite option introduced in Junos OS Release 14.2R3.
Command introduced in Junos OS Release 17.2 for MX2008 Universal Routing Platforms.
Command introduced in Junos OS Release 17.3 for MX150 Router Appliance.
Command introduced in Junos OS Release 17.2 for PTX10008 Routers.
Command introduced in Junos OS Release 17.4 for MX204 Universal Routing Platforms.
Command introduced in Junos OS Release 18.1R1 for EX9251 Switches.
Command introduced in Junos OS Release 18.2 for EX9253 Switches.
Command introduced in Junos OS Release 18.2 for MX10008 Universal Routing Platforms.

Description

(T Series routers, TX Matrix routers, TX Matrix Plus routers, M120 routers, M320 routers, MX104 routers, MX2010 routers, MX2020 routers, MX2008 routers, MX Series 5G Universal Routing Platforms, QFX3008-I Interconnect devices, QFX Series, OCX Series, EX Series switches, and PTX Series Packet Transport Routers only) Show information about the fan tray and fans.

Options

all-members—(MX Series routers only) (Optional) Display information about the fan tray and fans for all members of the Virtual Chassis configuration.

local—(MX Series routers only) (Optional) Display information about the fan tray and fans for the local Virtual Chassis member.

member *member-id*—(MX Series routers only) (Optional) Display information about the fan tray and fans for the specified member of the Virtual Chassis configuration. For an MX Series Virtual Chassis, replace *member-id* variable with a value 0 or 1.

interconnect-device ***name***—(QFX3000-G QFabric systems only) (Optional) Display information about the fan tray and fans for the specified QFX3008-I Interconnect device.

lcc ***number***—(TX Matrix and TX Matrix Plus routers only) (Optional) On a TX Matrix router, display information about the fan tray and fans for the specified T640 router (line-card chassis) that is connected to a TX Matrix router. On a TX Matrix Plus router, display information about the fan tray and fans for the specified router (line-card chassis) that is connected to a TX Matrix Plus router.

Replace *number* with the following values depending on the LCC configuration:

- 0 through 3, when T640 routers are connected to a TX Matrix router in a routing matrix.
- 0 through 3, when T1600 routers are connected to a TX Matrix Plus router in a routing matrix.
- 0 through 7, when T1600 routers are connected to a TX Matrix Plus router with 3D SIBs in a routing matrix.
- 0, 2, 4, or 6, when T4000 routers are connected to a TX Matrix Plus router with 3D SIBs in a routing matrix.

satellite [slot-id ***slot-id*** **| device-alias** ***alias-name*****]**—(Junos Fusion only) (Optional) Display information about the fan tray and fans for the specified satellite device or devices in a Junos Fusion, or for all satellite devices if no satellite devices are specified.

scc —(TX Matrix routers only) (Optional) Display information about the fan tray and fans for the TX Matrix router (switch-card chassis).

sfc ***number***—(TX Matrix Plus routers only) (Optional) Display information about the fan tray and fans for the TX Matrix Plus router (switch-fabric chassis). Replace *number* variable with **0**.

Required Privilege Level view

List of Sample Output

Output Fields

Table 14 on page 361 lists the output fields for the **show chassis fan** command. Output fields are listed in the approximate order in which they appear.

Table 14: show chassis fan Output Fields

Field Name	Field Description
Item	Fan item identifier.
Status	Status of the fan: • **OK**—Fan is running properly and within the normal range. • **Check**—Fan is in **Check** state because of some fault or alarm condition.
RPM	(T Series routers, TX Matrix routers, TX Matrix Plus routers, MX Series 5G Universal Routing Platforms, QFX3108 Interconnect devices, and EX Series switches only) Fan speed in revolutions per minute (RPM).
% RPM	(MX2010 routers, MX2020 routers, MX2008 routers, and PTX Series Packet Transport Routers only) Percentage of the fan speed being used.
Measurement	(T Series routers, TX Matrix routers, TX Matrix Plus routers, MX Series 5G Universal Routing Platforms, QFX3108 Interconnect devices, and EX Series switches only) Fan speed status based on different chassis cooling requirements: • Spinning at high speed • Spinning at intermediate speed • Spinning at normal speed • Spinning at low speed (except EX Series switches) (MX2010 routers, MX2020 routers, MX2008 routers, and PTX Series Packet Transport Routers only) Fan speed in revolutions per minute (RPM) for each fan in the fan tray.

Sample Output

show chassis fan

```
user@host> show chassis fan

Item                      Status   RPM     Measurement
Top Tray Fan 1            OK       3790    Spinning at normal speed
Top Tray Fan 2            OK       3769    Spinning at normal speed
Top Tray Fan 3            OK       3769    Spinning at normal speed
Top Tray Fan 4            OK       3790    Spinning at normal speed
Top Tray Fan 5            OK       3790    Spinning at normal speed
Top Tray Fan 6            OK       3769    Spinning at normal speed
Top Tray Fan 7            OK       3790    Spinning at normal speed
Top Tray Fan 8            OK       3769    Spinning at normal speed
Top Tray Fan 9            OK       3769    Spinning at normal speed
Top Tray Fan 10           OK       3790    Spinning at normal speed
Top Tray Fan 11           OK       3790    Spinning at normal speed
Top Tray Fan 12           OK       3769    Spinning at normal speed
Bottom Tray Fan 1         OK       2880    Spinning at normal speed
Bottom Tray Fan 2         OK       2912    Spinning at normal speed
Bottom Tray Fan 3         OK       2928    Spinning at normal speed
Bottom Tray Fan 4         OK       2896    Spinning at normal speed
Bottom Tray Fan 5         OK       2896    Spinning at normal speed
Bottom Tray Fan 6         OK       2928    Spinning at normal speed
```

show chassis fan (QFabric Systems)

```
user@host> show chassis fan interconnect-device interconnect1

Item                      Status   RPM     Measurement
TFT 0 Fan 0               OK       2849    Spinning at normal speed
TFT 0 Fan 1               OK       2821    Spinning at normal speed
TFT 0 Fan 2               OK       2735    Spinning at normal speed
TFT 0 Fan 3               OK       2815    Spinning at normal speed
TFT 0 Fan 4               OK       2828    Spinning at normal speed
TFT 0 Fan 5               OK       2863    Spinning at normal speed
BFT 1 Fan 0               OK       2941    Spinning at normal speed
BFT 1 Fan 1               OK       3008    Spinning at normal speed
BFT 1 Fan 2               OK       3073    Spinning at normal speed
BFT 1 Fan 3               OK       2925    Spinning at normal speed
BFT 1 Fan 4               OK       2863    Spinning at normal speed
BFT 1 Fan 5               OK       2933    Spinning at normal speed
SFT 0 Fan 0 Rotor 0       OK       15472   Spinning at normal speed
SFT 0 Fan 0 Rotor 1       OK       14477   Spinning at normal speed
SFT 0 Fan 1 Rotor 0       OK       15561   Spinning at normal speed
SFT 0 Fan 1 Rotor 1       OK       14210   Spinning at normal speed
SFT 0 Fan 2 Rotor 0       OK       16167   Spinning at normal speed
SFT 0 Fan 2 Rotor 1       OK       14248   Spinning at normal speed
SFT 0 Fan 3 Rotor 0       OK       16463   Spinning at normal speed
SFT 0 Fan 3 Rotor 1       OK       14099   Spinning at normal speed
SFT 1 Fan 0 Rotor 0       OK       15083   Spinning at normal speed
SFT 1 Fan 0 Rotor 1       OK       13533   Spinning at normal speed
SFT 1 Fan 1 Rotor 0       OK       16071   Spinning at normal speed
SFT 1 Fan 1 Rotor 1       OK       14400   Spinning at normal speed
SFT 1 Fan 2 Rotor 0       OK       15517   Spinning at normal speed
SFT 1 Fan 2 Rotor 1       OK       14210   Spinning at normal speed
SFT 1 Fan 3 Rotor 0       OK       16413   Spinning at normal speed
SFT 1 Fan 3 Rotor 1       OK       14400   Spinning at normal speed
SFT 2 Fan 0 Rotor 0       OK       15297   Spinning at normal speed
```

```
SFT 2 Fan 0 Rotor 1       OK       14634   Spinning at normal speed
SFT 2 Fan 1 Rotor 0       OK       15561   Spinning at normal speed
SFT 2 Fan 1 Rotor 1       OK       14285   Spinning at normal speed
SFT 2 Fan 2 Rotor 0       OK       15835   Spinning at normal speed
SFT 2 Fan 2 Rotor 1       OK       14400   Spinning at normal speed
SFT 2 Fan 3 Rotor 0       OK       15789   Spinning at normal speed
SFT 2 Fan 3 Rotor 1       OK       14323   Spinning at normal speed
SFT 3 Fan 0 Rotor 0       OK       16314   Spinning at normal speed
SFT 3 Fan 0 Rotor 1       OK       14876   Spinning at normal speed
SFT 3 Fan 1 Rotor 0       OK       15835   Spinning at normal speed
SFT 3 Fan 1 Rotor 1       OK       14323   Spinning at normal speed
SFT 3 Fan 2 Rotor 0       OK       16265   Spinning at normal speed
SFT 3 Fan 2 Rotor 1       OK       14594   Spinning at normal speed
SFT 3 Fan 3 Rotor 0       OK       16071   Spinning at normal speed
SFT 3 Fan 3 Rotor 1       OK       14323   Spinning at normal speed
SFT 4 Fan 0 Rotor 0       OK       15652   Spinning at normal speed
SFT 4 Fan 0 Rotor 1       OK       14438   Spinning at normal speed
SFT 4 Fan 1 Rotor 0       OK       16167   Spinning at normal speed
SFT 4 Fan 1 Rotor 1       OK       14555   Spinning at normal speed
SFT 4 Fan 2 Rotor 0       OK       16023   Spinning at normal speed
SFT 4 Fan 2 Rotor 1       OK       14361   Spinning at normal speed
SFT 4 Fan 3 Rotor 0       OK       16216   Spinning at normal speed
SFT 4 Fan 3 Rotor 1       OK       14438   Spinning at normal speed
SFT 5 Fan 0 Rotor 0       OK       15297   Spinning at normal speed
SFT 5 Fan 0 Rotor 1       OK       14173   Spinning at normal speed
SFT 5 Fan 1 Rotor 0       OK       15472   Spinning at normal speed
SFT 5 Fan 1 Rotor 1       OK       13846   Spinning at normal speed
SFT 5 Fan 2 Rotor 0       OK       15340   Spinning at normal speed
SFT 5 Fan 2 Rotor 1       OK       13917   Spinning at normal speed
SFT 5 Fan 3 Rotor 0       OK       15835   Spinning at normal speed
SFT 5 Fan 3 Rotor 1       OK       13917   Spinning at normal speed
SFT 6 Fan 0 Rotor 0       OK       15743   Spinning at normal speed
SFT 6 Fan 0 Rotor 1       OK       14594   Spinning at normal speed
SFT 6 Fan 1 Rotor 0       OK       16167   Spinning at normal speed
SFT 6 Fan 1 Rotor 1       OK       14634   Spinning at normal speed
SFT 6 Fan 2 Rotor 0       OK       16167   Spinning at normal speed
SFT 6 Fan 2 Rotor 1       OK       14516   Spinning at normal speed
SFT 6 Fan 3 Rotor 0       OK       16666   Spinning at normal speed
SFT 6 Fan 3 Rotor 1       OK       14438   Spinning at normal speed
SFT 7 Fan 0 Rotor 0       OK       15517   Spinning at normal speed
SFT 7 Fan 0 Rotor 1       OK       14438   Spinning at normal speed
SFT 7 Fan 1 Rotor 0       OK       15517   Spinning at normal speed
SFT 7 Fan 1 Rotor 1       OK       14361   Spinning at normal speed
SFT 7 Fan 2 Rotor 0       OK       16167   Spinning at normal speed
SFT 7 Fan 2 Rotor 1       OK       14555   Spinning at normal speed
SFT 7 Fan 3 Rotor 0       OK       15697   Spinning at normal speed
SFT 7 Fan 3 Rotor 1       OK       14361   Spinning at normal speed
```

show chassis fan (EX Series Switches)

```
user@host> show chassis fan

Item                      Status   RPM     Measurement
Fan 1                     OK       3477    Spinning at normal speed
Fan 2                     OK       3477    Spinning at normal speed
Fan 3                     OK       3479    Spinning at normal speed
Fan 4                     OK       3508    Spinning at normal speed
Fan 5                     OK       3517    Spinning at normal speed
Fan 6                     OK       3531    Spinning at normal speed
Fan 7                     OK       3439    Spinning at normal speed
Fan 8                     OK       3424    Spinning at normal speed
```

```
Fan 9                    OK       3413    Spinning at normal speed
Fan 10                   OK       3439    Spinning at normal speed
Fan 11                   OK       3446    Spinning at normal speed
Fan 12                   OK       3432    Spinning at normal speed
```

show chassis fan (T320 Router)

```
user@host> show chassis fan

     Item                Status    RPM     Measurement
Top Left Front fan        OK       2850    Spinning at normal speed
Top Left Middle fan       OK       2820    Spinning at normal speed
Top Left Rear fan         OK       2970    Spinning at normal speed
Top Right Front fan       OK       2790    Spinning at normal speed
Top Right Middle fan      OK       2640    Spinning at normal speed
Top Right Rear fan        OK       2790    Spinning at normal speed
Bottom Left Front fan     OK       2520    Spinning at normal speed
Bottom Left Middle fan    OK       2610    Spinning at normal speed
Bottom Left Rear fan      OK       2550    Spinning at normal speed
Bottom Right Front fan    OK       2610    Spinning at normal speed
Bottom Right Middle fan   OK       2880    Spinning at normal speed
Bottom Right Rear fan     OK       2790    Spinning at normal speed
Rear Tray Top fan         OK       2130    Spinning at normal speed
Rear Tray Second fan      OK       2190    Spinning at normal speed
Rear Tray Middle fan      OK       2250    Spinning at normal speed
Rear Tray Fourth fan      OK       2220    Spinning at normal speed
Rear Tray Bottom fan      OK       2280    Spinning at normal speed
```

show chassis fan (T640 Router)

```
user@host> show chassis fan

   Item                  Status    RPM     Measurement
Top Left Front fan        OK       3420    Spinning at normal speed
Top Left Middle fan       OK       3420    Spinning at normal speed
Top Left Rear fan         OK       3420    Spinning at normal speed
Top Right Front fan       OK       3420    Spinning at normal speed
Top Right Middle fan      OK       3420    Spinning at normal speed
Top Right Rear fan        OK       3450    Spinning at normal speed
Bottom Left Front fan     OK       3390    Spinning at normal speed
Bottom Left Middle fan    OK       3420    Spinning at normal speed
Bottom Left Rear fan      OK       3390    Spinning at normal speed
Bottom Right Front fan    OK       3390    Spinning at normal speed
Bottom Right Middle fan   OK       3390    Spinning at normal speed
Bottom Right Rear fan     OK       3390    Spinning at normal speed
Rear Tray Top fan         OK       5220    Spinning at normal speed
Rear Tray Second fan      OK       5220    Spinning at normal speed
Rear Tray Third fan       OK       5220    Spinning at normal speed
Rear Tray Fourth fan      OK       5220    Spinning at normal speed
Rear Tray Fifth fan       OK       5220    Spinning at normal speed
Rear Tray Sixth fan       OK       5220    Spinning at normal speed
Rear Tray Seventh fan     OK       5220    Spinning at normal speed
Rear Tray Bottom fan      OK       5220    Spinning at normal speed
```

show chassis fan (T1600 Router)

```
user@host> show chassis fan

  Item                   Status    RPM     Measurement
Top Left Front fan        OK       3420    Spinning at normal speed
```

```
      Top Left Middle fan       OK       3420    Spinning at normal speed
      Top Left Rear fan         OK       3450    Spinning at normal speed
      Top Right Front fan       OK       3420    Spinning at normal speed
      Top Right Middle fan      OK       3420    Spinning at normal speed
      Top Right Rear fan        OK       3390    Spinning at normal speed
      Bottom Left Front fan     OK       3420    Spinning at normal speed
      Bottom Left Middle fan    OK       3420    Spinning at normal speed
      Bottom Left Rear fan      OK       3390    Spinning at normal speed
      Bottom Right Front fan    OK       3390    Spinning at normal speed
      Bottom Right Middle fan   OK       3420    Spinning at normal speed
      Bottom Right Rear fan     OK       3390    Spinning at normal speed
      Rear Tray Top fan         OK       5190    Spinning at normal speed
      Rear Tray Second fan      OK       5190    Spinning at normal speed
      Rear Tray Third fan       OK       5190    Spinning at normal speed
      Rear Tray Fourth fan      OK       5190    Spinning at normal speed
      Rear Tray Fifth fan       OK       5190    Spinning at normal speed
      Rear Tray Sixth fan       OK       5190    Spinning at normal speed
      Rear Tray Seventh fan     OK       5190    Spinning at normal speed
      Rear Tray Bottom fan      OK       5190    Spinning at normal speed
```

show chassis fan (T4000 Core Router)

```
user@host> show chassis fan

      Item                      Status   RPM     Measurement
      Top Left Front fan        OK       5190    Spinning at high speed
      Top Left Middle fan       OK       5220    Spinning at high speed
      Top Left Rear fan         OK       5190    Spinning at high speed
      Top Right Front fan       OK       5160    Spinning at high speed
      Top Right Middle fan      OK       5190    Spinning at high speed
      Top Right Rear fan        OK       5160    Spinning at high speed
      Bottom Left Front fan     OK       6030    Spinning at high speed
      Bottom Left Middle fan    OK       6090    Spinning at high speed
      Bottom Left Rear fan      OK       6090    Spinning at high speed
      Bottom Right Front fan    OK       6030    Spinning at high speed
      Bottom Right Middle fan   OK       6060    Spinning at high speed
      Bottom Right Rear fan     OK       6060    Spinning at high speed
      Rear Tray Top fan         OK       10000   Spinning at high speed
      Rear Tray Second fan      OK       10000   Spinning at high speed
      Rear Tray Third fan       OK       10000   Spinning at high speed
      Rear Tray Fourth fan      OK       10000   Spinning at high speed
      Rear Tray Fifth fan       OK       10000   Spinning at high speed
      Rear Tray Sixth fan       OK       10000   Spinning at high speed
      Rear Tray Seventh fan     OK       10000   Spinning at high speed
      Rear Tray Bottom fan      OK       10000   Spinning at high speed
```

show chassis fan (TX Matrix Router)

```
user@host> show chassis fan
scc-re0:
--------------------------------------------------------------------------
      Item                      Status   RPM     Measurement
      Top Left Front fan        OK       3420    Spinning at normal speed
      Top Left Middle fan       OK       3390    Spinning at normal speed
      Top Left Rear fan         OK       3420    Spinning at normal speed
      Top Right Front fan       OK       3390    Spinning at normal speed
      Top Right Middle fan      OK       3420    Spinning at normal speed
      Top Right Rear fan        OK       3390    Spinning at normal speed
      Bottom Left Front fan     OK       3420    Spinning at normal speed
      Bottom Left Middle fan    OK       3450    Spinning at normal speed
```

```
      Bottom Left Rear fan      OK       3420    Spinning at normal speed
      Bottom Right Front fan    OK       3420    Spinning at normal speed
      Bottom Right Middle fan   OK       3420    Spinning at normal speed
      Bottom Right Rear fan     OK       3420    Spinning at normal speed
      Rear Tray Top fan         OK       3420    Spinning at normal speed
      Rear Tray Second fan      OK       5190    Spinning at normal speed
      Rear Tray Third fan       OK       5190    Spinning at normal speed
      Rear Tray Fourth fan      OK       5190    Spinning at normal speed
      Rear Tray Fifth fan       OK       3420    Spinning at normal speed
      Rear Tray Sixth fan       OK       3420    Spinning at normal speed
      Rear Tray Seventh fan     OK       3420    Spinning at normal speed
      Rear Tray Bottom fan      OK       3420    Spinning at normal speed

lcc2-re0:
--------------------------------------------------------------------------
      Item                      Status   RPM     Measurement
      Top Left Front fan        OK       3420    Spinning at normal speed
      Top Left Middle fan       OK       3420    Spinning at normal speed
      Top Left Rear fan         OK       3450    Spinning at normal speed
      Top Right Front fan       OK       3420    Spinning at normal speed
      Top Right Middle fan      OK       3450    Spinning at normal speed
      Top Right Rear fan        OK       3360    Spinning at normal speed
      Bottom Left Front fan     OK       3420    Spinning at normal speed
      Bottom Left Middle fan    OK       3480    Spinning at normal speed
      Bottom Left Rear fan      OK       3420    Spinning at normal speed
      Bottom Right Front fan    OK       3420    Spinning at normal speed
      Bottom Right Middle fan   OK       3390    Spinning at normal speed
      Bottom Right Rear fan     OK       3420    Spinning at normal speed
      Rear Tray Top fan         OK       3420    Spinning at normal speed
      Rear Tray Second fan      OK       3420    Spinning at normal speed
      Rear Tray Third fan       OK       3420    Spinning at normal speed
      Rear Tray Fourth fan      OK       3420    Spinning at normal speed
      Rear Tray Fifth fan       OK       3420    Spinning at normal speed
      Rear Tray Sixth fan       OK       3420    Spinning at normal speed
      Rear Tray Seventh fan     OK       3420    Spinning at normal speed
      Rear Tray Bottom fan      OK       3420    Spinning at normal speed
```

show chassis fan (TX Matrix Plus Router)

```
user@host> show chassis fan
  sfc0-re0:
--------------------------------------------------------------------------
      Item                      Status   RPM     Measurement
      Fan Tray 0 Fan 1          OK       4350    Spinning at normal speed
      Fan Tray 0 Fan 2          OK       4380    Spinning at normal speed
      Fan Tray 0 Fan 3          OK       4410    Spinning at normal speed
      Fan Tray 0 Fan 4          OK       4380    Spinning at normal speed
      Fan Tray 0 Fan 5          OK       4350    Spinning at normal speed
      Fan Tray 0 Fan 6          OK       4380    Spinning at normal speed
      Fan Tray 1 Fan 1          OK       4410    Spinning at normal speed
      Fan Tray 1 Fan 2          OK       4380    Spinning at normal speed
      Fan Tray 1 Fan 3          OK       4410    Spinning at normal speed
      Fan Tray 1 Fan 4          OK       4380    Spinning at normal speed
      Fan Tray 1 Fan 5          OK       4410    Spinning at normal speed
      Fan Tray 1 Fan 6          OK       4410    Spinning at normal speed
      Fan Tray 2 Fan 1          OK       4380    Spinning at normal speed
      Fan Tray 2 Fan 2          OK       4380    Spinning at normal speed
      Fan Tray 2 Fan 3          OK       4380    Spinning at normal speed
      Fan Tray 2 Fan 4          OK       4410    Spinning at normal speed
      Fan Tray 2 Fan 5          OK       4380    Spinning at normal speed
      Fan Tray 2 Fan 6          OK       4410    Spinning at normal speed
```

```
      Fan Tray 2 Fan 7          OK       4410    Spinning at normal speed
      Fan Tray 2 Fan 8          OK       4380    Spinning at normal speed
      Fan Tray 2 Fan 9          OK       4380    Spinning at normal speed
      Fan Tray 3 Fan 1          OK       4350    Spinning at normal speed
      Fan Tray 3 Fan 2          OK       4380    Spinning at normal speed
      Fan Tray 3 Fan 3          OK       4410    Spinning at normal speed
      Fan Tray 3 Fan 4          OK       4440    Spinning at normal speed
      Fan Tray 3 Fan 5          OK       4380    Spinning at normal speed
      Fan Tray 3 Fan 6          OK       4410    Spinning at normal speed
      Fan Tray 3 Fan 7          OK       4410    Spinning at normal speed
      Fan Tray 3 Fan 8          OK       4380    Spinning at normal speed
      Fan Tray 3 Fan 9          OK       4410    Spinning at normal speed
      Fan Tray 4 Fan 1          OK       4410    Spinning at normal speed
      Fan Tray 4 Fan 2          OK       4410    Spinning at normal speed
      Fan Tray 4 Fan 3          OK       4380    Spinning at normal speed
      Fan Tray 4 Fan 4          OK       4380    Spinning at normal speed
      Fan Tray 4 Fan 5          OK       4410    Spinning at normal speed
      Fan Tray 4 Fan 6          OK       4410    Spinning at normal speed
      Fan Tray 4 Fan 7          OK       4410    Spinning at normal speed
      Fan Tray 4 Fan 8          OK       4410    Spinning at normal speed
      Fan Tray 4 Fan 9          OK       4410    Spinning at normal speed
      Fan Tray 5 Fan 1          OK       4350    Spinning at normal speed
      Fan Tray 5 Fan 2          OK       4380    Spinning at normal speed
      Fan Tray 5 Fan 3          OK       4380    Spinning at normal speed
      Fan Tray 5 Fan 4          OK       4350    Spinning at normal speed
      Fan Tray 5 Fan 5          OK       4380    Spinning at normal speed
      Fan Tray 5 Fan 6          OK       4410    Spinning at normal speed
      Fan Tray 5 Fan 7          OK       4410    Spinning at normal speed
      Fan Tray 5 Fan 8          OK       4380    Spinning at normal speed
      Fan Tray 5 Fan 9          OK       4410    Spinning at normal speed

lcc0-re0:
--------------------------------------------------------------------------
      Item                      Status   RPM     Measurement
      Top Left Front fan        OK       3420    Spinning at normal speed
      Top Left Middle fan       OK       3420    Spinning at normal speed
      Top Left Rear fan         OK       3420    Spinning at normal speed
      Top Right Front fan       OK       3450    Spinning at normal speed
      Top Right Middle fan      OK       3420    Spinning at normal speed
      Top Right Rear fan        OK       3420    Spinning at normal speed
      Bottom Left Front fan     OK       3420    Spinning at normal speed
      Bottom Left Middle fan    OK       3420    Spinning at normal speed
      Bottom Left Rear fan      OK       3390    Spinning at normal speed
      Bottom Right Front fan    OK       3420    Spinning at normal speed
      Bottom Right Middle fan   OK       3390    Spinning at normal speed
      Bottom Right Rear fan     OK       3390    Spinning at normal speed
      Rear Tray Top fan         OK       7050    Spinning at normal speed
      Rear Tray Second fan      OK       7050    Spinning at normal speed
      Rear Tray Third fan       OK       7050    Spinning at normal speed
      Rear Tray Fourth fan      OK       7050    Spinning at normal speed
      Rear Tray Fifth fan       OK       7050    Spinning at normal speed
      Rear Tray Sixth fan       OK       7050    Spinning at normal speed
      Rear Tray Seventh fan     OK       7050    Spinning at normal speed
      Rear Tray Bottom fan      OK       7050    Spinning at normal speed
```

show chassis fan (TX Matrix Plus Router with 3D SIBs)

```
user@host> show chassis fan
sfc0-re0:
--------------------------------------------------------------------------
      Item                      Status   RPM     Measurement
```

```
      Fan Tray 0 Fan 1          OK       4830    Spinning at normal speed
      Fan Tray 0 Fan 2          OK       4860    Spinning at normal speed
      Fan Tray 0 Fan 3          OK       4830    Spinning at normal speed
      Fan Tray 0 Fan 4          OK       4800    Spinning at normal speed
      Fan Tray 0 Fan 5          OK       4830    Spinning at normal speed
      Fan Tray 0 Fan 6          OK       4770    Spinning at normal speed
      Fan Tray 1 Fan 1          OK       4800    Spinning at normal speed
      Fan Tray 1 Fan 2          OK       4770    Spinning at normal speed
      Fan Tray 1 Fan 3          OK       4800    Spinning at normal speed
      Fan Tray 1 Fan 4          OK       4770    Spinning at normal speed
      Fan Tray 1 Fan 5          OK       4770    Spinning at normal speed
      Fan Tray 1 Fan 6          OK       4800    Spinning at normal speed
      Fan Tray 2 Fan 1          OK       4800    Spinning at normal speed
      Fan Tray 2 Fan 2          OK       4800    Spinning at normal speed
      Fan Tray 2 Fan 3          OK       4830    Spinning at normal speed
      Fan Tray 2 Fan 4          OK       4830    Spinning at normal speed
      Fan Tray 2 Fan 5          OK       4830    Spinning at normal speed
      Fan Tray 2 Fan 6          OK       4830    Spinning at normal speed
      Fan Tray 2 Fan 7          OK       4800    Spinning at normal speed
      Fan Tray 2 Fan 8          OK       4830    Spinning at normal speed
      Fan Tray 2 Fan 9          OK       4800    Spinning at normal speed
      Fan Tray 3 Fan 1          OK       4860    Spinning at normal speed
      Fan Tray 3 Fan 2          OK       4860    Spinning at normal speed
      Fan Tray 3 Fan 3          OK       4800    Spinning at normal speed
      Fan Tray 3 Fan 4          OK       4830    Spinning at normal speed
      Fan Tray 3 Fan 5          OK       4830    Spinning at normal speed
      Fan Tray 3 Fan 6          OK       4830    Spinning at normal speed
      Fan Tray 3 Fan 7          OK       4830    Spinning at normal speed
      Fan Tray 3 Fan 8          OK       4800    Spinning at normal speed
      Fan Tray 3 Fan 9          OK       4800    Spinning at normal speed
      Fan Tray 4 Fan 1          OK       4830    Spinning at normal speed
      Fan Tray 4 Fan 2          OK       4830    Spinning at normal speed
      Fan Tray 4 Fan 3          OK       4830    Spinning at normal speed
      Fan Tray 4 Fan 4          OK       4830    Spinning at normal speed
      Fan Tray 4 Fan 5          OK       4830    Spinning at normal speed
      Fan Tray 4 Fan 6          OK       4860    Spinning at normal speed
      Fan Tray 4 Fan 7          OK       4800    Spinning at normal speed
      Fan Tray 4 Fan 8          OK       4860    Spinning at normal speed
      Fan Tray 4 Fan 9          OK       4770    Spinning at normal speed
      Fan Tray 5 Fan 1          OK       4830    Spinning at normal speed
      Fan Tray 5 Fan 2          OK       4830    Spinning at normal speed
      Fan Tray 5 Fan 3          OK       4830    Spinning at normal speed
      Fan Tray 5 Fan 4          OK       4800    Spinning at normal speed
      Fan Tray 5 Fan 5          OK       4800    Spinning at normal speed
      Fan Tray 5 Fan 6          OK       4800    Spinning at normal speed
      Fan Tray 5 Fan 7          OK       4830    Spinning at normal speed
      Fan Tray 5 Fan 8          OK       4830    Spinning at normal speed
      Fan Tray 5 Fan 9          Check    2010

lcc0-re0:
--------------------------------------------------------------------------
      Item                      Status   RPM     Measurement
      Top Left Front fan        OK       3420    Spinning at normal speed
      Top Left Middle fan       OK       3390    Spinning at normal speed
      Top Left Rear fan         OK       3390    Spinning at normal speed
      Top Right Front fan       OK       3420    Spinning at normal speed
      Top Right Middle fan      OK       3420    Spinning at normal speed
      Top Right Rear fan        OK       3450    Spinning at normal speed
      Bottom Left Front fan     OK       3420    Spinning at normal speed
      Bottom Left Middle fan    OK       3390    Spinning at normal speed
      Bottom Left Rear fan      OK       3420    Spinning at normal speed
```

```
      Bottom Right Front fan    OK       3420    Spinning at normal speed
      Bottom Right Middle fan   OK       3390    Spinning at normal speed
      Bottom Right Rear fan     OK       3420    Spinning at normal speed
      Rear Tray fan 1 (Top)     OK       7740    Spinning at normal speed
      Rear Tray fan 2           OK       7740    Spinning at normal speed
      Rear Tray fan 3           OK       7740    Spinning at normal speed
      Rear Tray fan 4           OK       7740    Spinning at normal speed
      Rear Tray fan 5           OK       7740    Spinning at normal speed
      Rear Tray fan 6           OK       7740    Spinning at normal speed
      Rear Tray fan 7           OK       7740    Spinning at normal speed
      Rear Tray fan 8           OK       7740    Spinning at normal speed
      Rear Tray fan 9           OK       7740    Spinning at normal speed
      Rear Tray fan 10          OK       7740    Spinning at normal speed
      Rear Tray fan 11          OK       7740    Spinning at normal speed
      Rear Tray fan 12          OK       7740    Spinning at normal speed
      Rear Tray fan 13          OK       7740    Spinning at normal speed
      Rear Tray fan 14          OK       7740    Spinning at normal speed
      Rear Tray fan 15          OK       7740    Spinning at normal speed
      Rear Tray fan 16 (Bottom) OK       7740    Spinning at normal speed

lcc2-re0:
--------------------------------------------------------------------------
      Item                      Status   RPM     Measurement
      Top Left Front fan        OK       3420    Spinning at normal speed
      Top Left Middle fan       OK       3390    Spinning at normal speed
      Top Left Rear fan         OK       3420    Spinning at normal speed
      Top Right Front fan       OK       3420    Spinning at normal speed
      Top Right Middle fan      OK       3420    Spinning at normal speed
      Top Right Rear fan        OK       3450    Spinning at normal speed
      Bottom Left Front fan     OK       3420    Spinning at normal speed
      Bottom Left Middle fan    OK       3390    Spinning at normal speed
      Bottom Left Rear fan      OK       3420    Spinning at normal speed
      Bottom Right Front fan    OK       3420    Spinning at normal speed
      Bottom Right Middle fan   OK       3390    Spinning at normal speed
      Bottom Right Rear fan     OK       3420    Spinning at normal speed
      Rear Tray fan 1 (Top)     OK       7740    Spinning at normal speed
      Rear Tray fan 2           OK       7740    Spinning at normal speed
      Rear Tray fan 3           OK       7740    Spinning at normal speed
      Rear Tray fan 4           OK       7740    Spinning at normal speed
      Rear Tray fan 5           OK       7740    Spinning at normal speed
      Rear Tray fan 6           OK       7740    Spinning at normal speed
      Rear Tray fan 7           OK       7740    Spinning at normal speed
      Rear Tray fan 8           OK       7740    Spinning at normal speed
      Rear Tray fan 9           OK       7740    Spinning at normal speed
      Rear Tray fan 10          OK       7740    Spinning at normal speed
      Rear Tray fan 11          OK       7740    Spinning at normal speed
      Rear Tray fan 12          OK       7740    Spinning at normal speed
      Rear Tray fan 13          OK       7740    Spinning at normal speed
      Rear Tray fan 14          OK       7740    Spinning at normal speed
      Rear Tray fan 15          OK       7740    Spinning at normal speed
      Rear Tray fan 16 (Bottom) OK       7740    Spinning at normal speed
```

show chassis fan (PTX5000 Packet Transport Router)

```
user@host> show chassis fan
user@host> show chassis fan
      Item                      Status   % RPM     Measurement
      Fan Tray 0 Fan 1          OK       29%       2700 RPM
      Fan Tray 0 Fan 2          OK       29%       2700 RPM
      Fan Tray 0 Fan 3          OK       29%       2742 RPM
      Fan Tray 0 Fan 4          OK       29%       2700 RPM
```

```
      Fan Tray 0 Fan 5          OK       30%       2828 RPM
      Fan Tray 0 Fan 6          OK       30%       2828 RPM
      Fan Tray 0 Fan 7          OK       29%       2700 RPM
      Fan Tray 0 Fan 8          OK       30%       2785 RPM
      Fan Tray 0 Fan 9          OK       30%       2828 RPM
      Fan Tray 0 Fan 10         OK       30%       2828 RPM
      Fan Tray 0 Fan 11         OK       30%       2785 RPM
      Fan Tray 0 Fan 12         OK       30%       2828 RPM
      Fan Tray 0 Fan 13         OK       31%       2871 RPM
      Fan Tray 0 Fan 14         OK       30%       2828 RPM
      Fan Tray 1 Fan 1          OK       42%       3033 RPM
      Fan Tray 1 Fan 2          OK       42%       3066 RPM
      Fan Tray 1 Fan 3          OK       43%       3099 RPM
      Fan Tray 1 Fan 4          OK       43%       3166 RPM
      Fan Tray 1 Fan 5          OK       45%       3266 RPM
      Fan Tray 1 Fan 6          OK       43%       3133 RPM
      Fan Tray 2 Fan 1          OK       29%       2099 RPM
      Fan Tray 2 Fan 2          OK       30%       2199 RPM
      Fan Tray 2 Fan 3          OK       30%       2166 RPM
      Fan Tray 2 Fan 4          OK       33%       2399 RPM
      Fan Tray 2 Fan 5          OK       29%       2133 RPM
      Fan Tray 2 Fan 6          OK       32%       2366 RPM
```

show chassis fan (PTX10008 Router)

```
user@host> show chassis fan
      Item                      Status   RPM     Measurement
      Fan Tray 0 Fan 0          OK       9000    Spinning at normal speed
      Fan Tray 0 Fan 1          OK       9000    Spinning at normal speed
      Fan Tray 0 Fan 2          OK       9150    Spinning at normal speed
      Fan Tray 0 Fan 3          OK       9150    Spinning at normal speed
      Fan Tray 0 Fan 4          OK       9000    Spinning at normal speed
      Fan Tray 0 Fan 5          OK       9150    Spinning at normal speed
      Fan Tray 0 Fan 6          OK       9000    Spinning at normal speed
      Fan Tray 0 Fan 7          OK       9150    Spinning at normal speed
      Fan Tray 0 Fan 8          OK       8850    Spinning at normal speed
      Fan Tray 0 Fan 9          OK       8850    Spinning at normal speed
      Fan Tray 0 Fan 10         OK       9000    Spinning at normal speed
      Fan Tray 1 Fan 0          OK       9150    Spinning at normal speed
      Fan Tray 1 Fan 1          OK       9150    Spinning at normal speed
      Fan Tray 1 Fan 2          OK       9000    Spinning at normal speed
      Fan Tray 1 Fan 3          OK       9000    Spinning at normal speed
      Fan Tray 1 Fan 4          OK       9000    Spinning at normal speed
      Fan Tray 1 Fan 5          OK       9000    Spinning at normal speed
      Fan Tray 1 Fan 6          OK       9000    Spinning at normal speed
      Fan Tray 1 Fan 7          OK       9150    Spinning at normal speed
      Fan Tray 1 Fan 8          OK       9000    Spinning at normal speed
      Fan Tray 1 Fan 9          OK       9000    Spinning at normal speed
      Fan Tray 1 Fan 10         OK       9000    Spinning at normal speed
```

show chassis fan (MX150)

```
user@host > show chassis fan
Item                        Status   RPM     Measurement
      FPC 0 Tray 0 Fan 0        OK       7419    Spinning at normal speed
      FPC 0 Tray 1 Fan 0        OK       7419    Spinning at normal speed
```

show chassis fan (MX104 Router)

```
user@host > show chassis fan
```

```
Item                        Status   RPM     Measurement
      Fan 1                    OK       5640    Spinning at normal speed
      Fan 2                    OK       5640    Spinning at normal speed
      Fan 3                    OK       5760    Spinning at normal speed
      Fan 4                    OK       5640    Spinning at normal speed
      Fan 5                    OK       5640    Spinning at normal speed
```

show chassis fan (MX2010 Router)

```
user@host > show chassis fan
Item                        Status   % RPM     Measurement
      Fan Tray 0 Fan 1         OK       37%       3360 RPM
      Fan Tray 0 Fan 2         OK       38%       3480 RPM
      Fan Tray 0 Fan 3         OK       37%       3360 RPM
      Fan Tray 0 Fan 4         OK       37%       3360 RPM
      Fan Tray 0 Fan 5         OK       38%       3480 RPM
      Fan Tray 0 Fan 6         OK       37%       3360 RPM
      Fan Tray 1 Fan 1         OK       38%       3480 RPM
      Fan Tray 1 Fan 2         OK       40%       3600 RPM
      Fan Tray 1 Fan 3         OK       38%       3480 RPM
      Fan Tray 1 Fan 4         OK       38%       3480 RPM
      Fan Tray 1 Fan 5         OK       38%       3480 RPM
      Fan Tray 1 Fan 6         OK       38%       3480 RPM
      Fan Tray 2 Fan 1         OK       38%       3480 RPM
      Fan Tray 2 Fan 2         OK       41%       3720 RPM
      Fan Tray 2 Fan 3         OK       38%       3480 RPM
      Fan Tray 2 Fan 4         OK       38%       3480 RPM
      Fan Tray 2 Fan 5         OK       38%       3480 RPM
      Fan Tray 2 Fan 6         OK       38%       3480 RPM
      Fan Tray 3 Fan 1         OK       38%       3480 RPM
      Fan Tray 3 Fan 2         OK       40%       3600 RPM
      Fan Tray 3 Fan 3         OK       40%       3600 RPM
      Fan Tray 3 Fan 4         OK       40%       3600 RPM
      Fan Tray 3 Fan 5         OK       40%       3600 RPM
      Fan Tray 3 Fan 6         OK       38%       3480 RPM
```

show chassis fan (MX2020 Router)

```
user@host > show chassis fan
      Item                       Status   % RPM     Measurement
      Fan Tray 0 Fan 1           OK       37%       3360 RPM
      Fan Tray 0 Fan 2           OK       37%       3360 RPM
      Fan Tray 0 Fan 3           OK       36%       3240 RPM
      Fan Tray 0 Fan 4           OK       37%       3360 RPM
      Fan Tray 0 Fan 5           OK       37%       3360 RPM
      Fan Tray 0 Fan 6           OK       37%       3360 RPM
      Fan Tray 1 Fan 1           OK       37%       3360 RPM
      Fan Tray 1 Fan 2           OK       37%       3360 RPM
      Fan Tray 1 Fan 3           OK       37%       3360 RPM
      Fan Tray 1 Fan 4           OK       37%       3360 RPM
      Fan Tray 1 Fan 5           OK       37%       3360 RPM
      Fan Tray 1 Fan 6           OK       36%       3240 RPM
      Fan Tray 2 Fan 1           OK       37%       3360 RPM
      Fan Tray 2 Fan 2           OK       37%       3360 RPM
      Fan Tray 2 Fan 3           OK       37%       3360 RPM
      Fan Tray 2 Fan 4           OK       37%       3360 RPM
      Fan Tray 2 Fan 5           OK       37%       3360 RPM
      Fan Tray 2 Fan 6           OK       38%       3480 RPM
      Fan Tray 3 Fan 1           OK       38%       3480 RPM
      Fan Tray 3 Fan 2           OK       38%       3480 RPM
```

```
Fan Tray 3 Fan 3          OK        38%        3480 RPM
Fan Tray 3 Fan 4          OK        37%        3360 RPM
Fan Tray 3 Fan 5          OK        37%        3360 RPM
Fan Tray 3 Fan 6          OK        37%        3360 RPM
```

show chassis fan (MX2008 Router)

```
user@host > show chassis fan
      Item                      Status    % RPM      Measurement
      Fan Tray 0 Fan 1          OK        64%        5760 RPM
      Fan Tray 0 Fan 2          OK        62%        5640 RPM
      Fan Tray 0 Fan 3          OK        64%        5760 RPM
      Fan Tray 0 Fan 4          OK        60%        5400 RPM
      Fan Tray 0 Fan 5          OK        61%        5520 RPM
      Fan Tray 0 Fan 6          OK        62%        5640 RPM
      Fan Tray 1 Fan 1          OK        61%        5520 RPM
      Fan Tray 1 Fan 2          OK        61%        5520 RPM
      Fan Tray 1 Fan 3          OK        61%        5520 RPM
      Fan Tray 1 Fan 4          OK        62%        5640 RPM
      Fan Tray 1 Fan 5          OK        62%        5640 RPM
      Fan Tray 1 Fan 6          OK        64%        5760 RPM
```

show chassis fan (MX10003 Router)

```
user@host> show chassis fan

      Item                      Status    % RPM      Measurement
      Fan Tray 0 Fan 0          OK        40%        7296 RPM
      Fan Tray 0 Fan 1          OK        40%        6656 RPM
      Fan Tray 0 Fan 2          OK        40%        7296 RPM
      Fan Tray 0 Fan 3          OK        40%        6400 RPM
      Fan Tray 1 Fan 0          OK        40%        7296 RPM
      Fan Tray 1 Fan 1          OK        40%        6528 RPM
      Fan Tray 1 Fan 2          OK        40%        7296 RPM
      Fan Tray 1 Fan 3          OK        40%        6784 RPM
      Fan Tray 2 Fan 0          OK        40%        7552 RPM
      Fan Tray 2 Fan 1          OK        40%        6784 RPM
      Fan Tray 2 Fan 2          OK        40%        7424 RPM
      Fan Tray 2 Fan 3          OK        40%        6528 RPM
      Fan Tray 3 Fan 0          OK        40%        7552 RPM
      Fan Tray 3 Fan 1          OK        40%        6528 RPM
      Fan Tray 3 Fan 2          OK        40%        7296 RPM
      Fan Tray 3 Fan 3          OK        40%        6656 RPM
```

show chassis fan (MX204 Router)

```
user@host> show chassis fan

      Item                      Status    % RPM      Measurement
      Fan Tray 0 Fan 0          OK        40%        9344 RPM
      Fan Tray 0 Fan 1          OK        40%        8576 RPM
      Fan Tray 1 Fan 0          OK        40%        9344 RPM
      Fan Tray 1 Fan 1          OK        40%        8832 RPM
      Fan Tray 2 Fan 0          OK        40%        9344 RPM
      Fan Tray 2 Fan 1          OK        40%        8576 RPM
```

show chassis fan (MX10008 Router)

```
user@host> show chassis fan
 Item                        Status   RPM     Measurement
      Fan Tray 0 Fan 0          OK       9750    Spinning at normal speed
      Fan Tray 0 Fan 1          OK       9750    Spinning at normal speed
      Fan Tray 0 Fan 2          OK       9900    Spinning at normal speed
      Fan Tray 0 Fan 3          OK       9600    Spinning at normal speed
      Fan Tray 0 Fan 4          Failed
      Fan Tray 0 Fan 5          Failed
      Fan Tray 0 Fan 6          OK       9750    Spinning at normal speed
      Fan Tray 0 Fan 7          OK       9750    Spinning at normal speed
      Fan Tray 0 Fan 8          OK       9600    Spinning at normal speed
      Fan Tray 0 Fan 9          OK       9600    Spinning at normal speed
      Fan Tray 0 Fan 10         OK       9600    Spinning at normal speed
      Fan Tray 1 Fan 0          OK       9600    Spinning at normal speed
      Fan Tray 1 Fan 1          OK       9600    Spinning at normal speed
      Fan Tray 1 Fan 2          OK       9750    Spinning at normal speed
      Fan Tray 1 Fan 3          OK       9600    Spinning at normal speed
      Fan Tray 1 Fan 4          OK       9600    Spinning at normal speed
      Fan Tray 1 Fan 5          OK       9600    Spinning at normal speed
      Fan Tray 1 Fan 6          OK       9600    Spinning at normal speed
      Fan Tray 1 Fan 7          OK       9750    Spinning at normal speed
      Fan Tray 1 Fan 8          OK       9750    Spinning at normal speed
      Fan Tray 1 Fan 9          OK       9600    Spinning at normal speed
      Fan Tray 1 Fan 10         OK       9600    Spinning at normal speed
```

show chassis fan (ACX4000 Router)

```
user@host > show chassis fan
      Item                        Status   RPM     Measurement
      Fan 1                       OK       4140    Spinning at normal speed
      Fan 2                       OK       4200    Spinning at normal speed
```

show chassis fan (ACX5048 Router)

```
user@host > show chassis fan
      Item                        Status   RPM     Measurement
      FPC 0 Tray 0 Fan 0          OK       18305   Spinning at normal speed
      FPC 0 Tray 0 Fan 1          OK       15743   Spinning at normal speed
      FPC 0 Tray 1 Fan 0          OK       18305   Spinning at normal speed
      FPC 0 Tray 1 Fan 1          OK       15606   Spinning at normal speed
      FPC 0 Tray 2 Fan 0          OK       19014   Spinning at normal speed
      FPC 0 Tray 2 Fan 1          OK       16167   Spinning at normal speed
      FPC 0 Tray 3 Fan 0          OK       18947   Spinning at normal speed
      FPC 0 Tray 3 Fan 1          OK       16265   Spinning at normal speed
      FPC 0 Tray 4 Fan 0          OK       18120   Spinning at normal speed
      FPC 0 Tray 4 Fan 1          OK       15743   Spinning at normal speed
```

show chassis fan (QFX5100 Switch and OCX Series)

```
user@switch > show chassis fan
Item                        Status   RPM     Measurement
FPC 0 Tray 0 Fan 0          OK       6428    Spinning at normal speed
FPC 0 Tray 0 Fan 1          OK       5515    Spinning at normal speed
FPC 0 Tray 1 Fan 0          OK       6360    Spinning at normal speed
FPC 0 Tray 1 Fan 1          OK       5532    Spinning at normal speed
```

show chassis fan (EX9251 switches)

```
user@switch > show chassis fan

        Item                      Status   % RPM     Measurement
        Fan Tray 0 Fan 0          OK       40%       9600 RPM
        Fan Tray 0 Fan 1          OK       40%       8832 RPM
        Fan Tray 1 Fan 0          OK       40%       9728 RPM
        Fan Tray 1 Fan 1          OK       40%       9088 RPM
        Fan Tray 2                Absent
```

show chassis fan (EX9253 switches)

```
user@switch > show chassis fan

        Item                      Status   % RPM    Measurement
        Fan Tray 0 Fan 0          OK       40%       7552 RPM
        Fan Tray 0 Fan 1          OK       40%       6272 RPM
        Fan Tray 0 Fan 2          OK       40%       7552 RPM
        Fan Tray 0 Fan 3          OK       40%       6272 RPM
        Fan Tray 1 Fan 0          OK       40%       7552 RPM
        Fan Tray 1 Fan 1          OK       40%       6272 RPM
        Fan Tray 1 Fan 2          OK       40%       7552 RPM
        Fan Tray 1 Fan 3          OK       40%       6272 RPM
        Fan Tray 2 Fan 0          OK       40%       7552 RPM
        Fan Tray 2 Fan 1          OK       40%       6400 RPM
        Fan Tray 2 Fan 2          OK       40%       7552 RPM
        Fan Tray 2 Fan 3          OK       40%       6272 RPM
        Fan Tray 3 Fan 0          OK       40%       7552 RPM
        Fan Tray 3 Fan 1          OK       40%       6400 RPM
        Fan Tray 3 Fan 2          OK       40%       7552 RPM
        Fan Tray 3 Fan 3          OK       40%       6272 RPM
```

show chassis firmware

List of Syntax

Syntax

show chassis firmware

Syntax (TX Matrix Routers)

show chassis firmware
<lcc *number* | scc>

Syntax (TX Matrix Plus Routers)

show chassis firmware
<lcc *number* | sfc *number*>

Syntax (MX Series Routers)

show chassis firmware
<all-members>
<local>
<member *member-id*>

Syntax (MX104, MX204, MX2010, MX2020, MX10003, and MX2008 Universal Routing Platforms)

show chassis firmware
<satellite [slot-id *slot-id* |device-alias *alias-name*]>

Syntax (MX10008 Universal Routing Platforms)

show chassis firmware

Syntax (PTX Series)

show chassis firmware

Syntax (QFX Series)

show chassis firmware
interconnect-device *name*
node-device *name*

Syntax (OCX Series)

show chassis firmware

Syntax (ACX Series Universal Metro Routers)

show chassis firmware

Syntax (ACX5048 and ACX5096 Routers)

show chassis firmware
interconnect-device *name*
node-device *name*

Syntax (ACX500 Routers)

show chassis firmware

Syntax (EX Series Switches)

show chassis firmware
<detail>
<satellite [slot-id *slot-id* |device-alias *alias-name*]>

Release Information

Command introduced before Junos OS Release 7.4.
Command introduced in Junos OS Release 9.4 for EX Series switches.
sfc option introduced in Junos OS Release 9.6 for the TX Matrix Plus router.
Command introduced for EX8200 switches in Junos OS Release 10.2 for EX Series switches.
Command introduced in Junos OS Release 11.1 for QFX Series.
Command introduced in Junos OS Release 12.2 for ACX Series Universal Metro Routers.
Command introduced in Junos OS Release 12.3 for MX2010 and MX2020 Universal Routing Platforms, and ACX4000 Universal Metro Routers.
Command introduced in Junos OS Release 13.2 for MX104 Universal Routing Platforms.
Command introduced in Junos OS Release 14.1X53-D20 for the OCX Series.
Command introduced in Junos OS Release 15.1X54-D20 for ACX5048 and ACX5096 Routers.
satellite option introduced in Junos OS Release 14.2R3.
Command introduced in Junos OS Release 17.2 for MX2008 Universal Routing Platforms.
Command introduced in Junos OS Release 17.2 for PTX10008 Routers.
Command introduced in Junos OS Release 17.3 for MX10003 Universal Routing Platforms.
Command introduced in Junos OS Release 17.4 for MX204 Universal Routing Platforms.
Command introduced in Junos OS Release 17.3 for MX150 Router Appliance.
Command introduced in Junos OS Release 18.1R1 for EX9251 switches.
Command introduced in Junos OS Release 18.2 for EX9253 Switches.
Command introduced in Junos OS Release 18.2 for MX10008 Universal Routing Platforms.

Description

On routers and switches, display the version levels of the firmware running on the System Control Board (SCB), Switching and Forwarding Module (SFM), System and Switch Board (SSB), Forwarding Engine Board (FEB), Flexible PIC Concentrators (FPCs), and Routing Engines. On a TX Matrix Plus router, display the version levels of the firmware running on the FPCs and the Switch Processor Mezzanine Board (SPMBs).

On EX2200, EX3200, EX4200, QFX Series, and OCX Series switches, display the version levels of the firmware running on the switch. On an EX8208 switch, display the version levels of the firmware running on the Switch Fabric and Routing Engine (SRE) modules and on the line cards (shown as FPCs). On an EX8216 switch, display the version levels

of the firmware running on the Routing Engine (RE) modules and on the line cards (shown as FPCs).

Options

none—Display the version levels of the firmware running. For an EX4200 switch that is a member of a Virtual Chassis, display version levels for all members. For a TX Matrix router, display version levels for the firmware on the TX Matrix router and on all the T640 routers connected to the TX Matrix router. For a TX Matrix Plus router, display version levels for the firmware on the TX Matrix Plus router and on all the routers connected to the TX Matrix Plus router.

all-members—(MX Series routers only) (Optional) Display the version levels of the firmware running for all members of the Virtual Chassis configuration.

interconnect-device *name*—(QFabric systems) (Optional) Display the version levels of the firmware running on the Interconnect device.

lcc *number*—(TX Matrix and TX Matrix Plus routers only) (Optional) On a TX Matrix router, display version levels for the firmware on a specified T640 router (line-card chassis) that is connected to the TX Matrix router. On a TX Matrix Plus router, display the version levels for the firmware on a specified router (line-card chassis) that is connected to the TX Matrix Plus router.

Replace *number* with the following values depending on the LCC configuration:

- 0 through 3, when T640 routers are connected to a TX Matrix router in a routing matrix.
- 0 through 3, when T1600 routers are connected to a TX Matrix Plus router in a routing matrix.
- 0 through 7, when T1600 routers are connected to a TX Matrix Plus router with 3D SIBs in a routing matrix.
- 0, 2, 4, or 6, when T4000 routers are connected to a TX Matrix Plus router with 3D SIBs in a routing matrix.

local—(MX Series routers only) (Optional) Display the version levels of the firmware running for the local Virtual Chassis member.

member *member-id*—(MX Series routers only) (Optional) Display the version levels of the firmware running for the specified member of the Virtual Chassis configuration. Replace *member-id* with a value of 0 or 1.

node-device—(QFabric systems only) (Optional) Display the version levels of the firmware running on the Node device.

satellite [slot-id *slot-id* | device-alias *alias-name*]—(Junos Fusion only) (Optional) Display version levels of the firmware running for the specified satellite device or devices in a Junos Fusion, or for all satellite devices if no satellite devices are specified.

scc—(TX Matrix router only) (Optional) Display version levels for the firmware on the TX Matrix router (switch-card chassis).

sfc *number*—(TX Matrix Plus router only) (Optional) Display version levels for the firmware on the TX Matrix Plus router (or switch-fabric chassis). Replace *number* with 0.

detail—(EX3200, EX3300, EX4200, and EX4500 standalone and Virtual Chassis member switches only) (Optional) Display version levels of the firmware running on the switch for its programmable hardware components.

Required Privilege Level view

List of Sample Output

Output Fields Table 15 on page 379 lists the output fields for the show chassis firmware command. Output fields are listed in the approximate order in which they appear.

Table 15: show chassis firmware Output Fields

Field Name	Field Description
Part	(MX Series, MX2010, MX2020, and MX2008 routers) Chassis part name.
Type	(MX Series, MX2010, MX2020, and MX2008 routers) Type of firmware: On routers: ROM or O/S. On switches: uboot or loader.
Version	(MX Series, MX2010, MX2020, and MX2008 routers) Version of firmware running on the chassis part.
FPC	(*detail* option only) Number of FPC. For a standalone switch, the value is 0. For a Virtual Chassis configuration, value in the range of 0-9; refers to the member ID assigned to the switch.
AFEB	(MX104 routers) Version of the compact Forwarding Engine Board.
Boot	(*detail* option only) Version of the SYSPLD.
PoE	(*detail* option only) Version of the PoE firmware.
PFE-*<number>*	(*detail* option only) Version of the Packet Forwarding Engine used in the switch.
PHY-	(*detail* option only) Version of the physical layer device (PHY) used in the switch.
microcode	(*detail* option only) Microcode of the physical layer devices (PHY) used in the switch.
uboot	(*detail* option only) Version of the u-boot used in the switch.
loader	(*detail* option only) Version of the loader used in the switch.

Sample Output

show chassis firmware (M10 Router)

```
user@host> show chassis firmware
Part                    Type       Version
Forwarding engine board ROM        Juniper ROM Monitor Version 4.1b2
                        O/S        Version 4.1I1 by usera on 2000-04-24 11:27
```

show chassis firmware (M20 Router)

```
user@host> show chassis firmware
Part                    Type       Version
System switch board     ROM        Juniper ROM Monitor Version 3.4b26
```

```
                                O/S        Version 3.4I16 by userc on 2000-02-29 2
FPC 1                           ROM        Juniper ROM Monitor Version 3.0b1
                                O/S        Version 3.4I4 by userc on 2000-02-25 21
FPC 2                           ROM        Juniper ROM Monitor Version 3.0b1
                                O/S        Version 3.4I4 by userc on 2000-02-25 21
```

show chassis firmware (M40 Router)

```
user@host> show chassis firmware
Part                            Type       Version
System control board            ROM        Juniper ROM Monitor Version 2.0i126Copyri
                                O/S        Version 2.0i1 by root on Thu Jul 23 00:51
FPC 5                           ROM        Juniper ROM Monitor Version 2.0i49Copyrig
                                O/S        Version 2.0i1 by root on Thu Jul 23 00:59
```

show chassis firmware (M120 Router)

```
user@host> show chassis firmware
FPC 2                           ROM        Juniper ROM Monitor Version 8.0b29
                                O/S        Version 8.2B1 by userb on 2006-10-18 16:2
FPC 3                           ROM        Juniper ROM Monitor Version 8.0b29
                                O/S        Version 8.2B1 by userb on 2006-10-18 16:2
FPC 4                           ROM        Juniper ROM Monitor Version 8.0b29
                                O/S        Version 8.2B1 by userb on 2006-10-18 16:2
FEB 3                           ROM        Juniper ROM Monitor Version 8.0b29
                                O/S        Version 8.2B1 by userb on 2006-10-18 16:1
FEB 4                           ROM        Juniper ROM Monitor Version 8.0b29
                                O/S        Version 8.2B1 by userb on 2006-10-18 16:1
```

show chassis firmware (M160 Router)

```
user@host> show chassis firmware
Part                            Type       Version
SFM 0                           ROM        Juniper ROM Monitor Version 4.0b2
                                O/S        Version 4.0I1 by usera on 2000-02-29 11:50
SFM 1                           ROM        Juniper ROM Monitor Version 4.0b2
                                O/S        Version 4.0I1 by usera on 2000-02-29 11:50
FPC 0                           ROM        Juniper ROM Monitor Version 4.0b2
                                O/S        Version 4.0I1 by usera on 2000-02-29 11:56
FPC 1                           ROM        Juniper ROM Monitor Version 4.0b2
                                O/S        Version 4.0I1 by usera on 2000-02-29 11:56
FPC 2                           ROM        Juniper ROM Monitor Version 4.0b3
                                O/S        Version 4.0I1 by usera on 2000-02-29 11:56
```

show chassis firmware (MX150)

```
user@host > show chassis firmware
Part                            Type       Version
FPC                             ROM        PC Bios
                                O/S        Version 17.2I20170220_0929_rohitn by rohitn
on 2017-02-20 09:38:59 UTC
```

show chassis firmware (MX104 Router)

```
user@host > show chassis firmware
Part                            Type       Version
FPC 0                           ROM        Juniper ROM Monitor Version 13.1b24
                                O/S        Version 13.2-20130514.1 by userb on 2013-
FPC 1                           ROM        Juniper ROM Monitor Version 13.1b24
```

```
                                O/S        Version 13.2-20130514.1 by userb on 2013-
FPC 2                           ROM        Juniper ROM Monitor Version 13.1b24
                                O/S        Version 13.2-20130514.1 by userb on 2013-
AFEB                            ROM        Juniper ROM Monitor Version 13.1b24
                                O/S        Version 13.2-20130514.1 by userb on 2013-
```

show chassis firmware (MX240 Router)

```
user@host> show chassis firmware
Part                            Type       Version
FPC 1                           ROM        Juniper ROM Monitor Version 8.3b1
                                O/S        Version 9.0-20080103.0 by userb on 2008-0
FPC 2                           ROM        Juniper ROM Monitor Version 8.3b1
                                O/S        Version 9.0-20080103.0 by userb on 2008-0
```

show chassis firmware (MX480 Router)

```
user@host> show chassis firmware
Part                            Type       Version
FPC 1                           ROM        Juniper ROM Monitor Version 8.3b1
                                O/S        Version 9.0-20070916.3 by userb on 2007-0
```

show chassis firmware (MX960 Router)

```
user@host> show chassis firmware
Part                            Type       Version
FPC 4                           ROM        Juniper ROM Monitor Version 8.0b8
                                O/S        Version 8.2I59 by user3 on 2006-10-31 19:22
FPC 7                           ROM        Juniper ROM Monitor Version 8.2b1
                                O/S        Version 8.2-20061026.1 by userb on 2006-1
```

show chassis firmware (MX2010 Router)

```
user@host> show chassis firmware
Part                            Type       Version
FPC 0                           ROM        Juniper ROM Monitor Version 12.3b1
                                O/S        Version 12.3-20121220.0 by userb on 2012-
FPC 1                           ROM        Juniper ROM Monitor Version 10.1b3
                                O/S        Version 12.3-20121220.0 by userb on 2012-
FPC 2                           ROM        Juniper ROM Monitor Version 10.1b3
                                O/S        Version 12.3-20121220.0 by userb on 2012-
FPC 3                           ROM        Juniper ROM Monitor Version 10.1b3
                                O/S        Version 12.3-20121220.0 by userb on 2012-
FPC 4                           ROM        Juniper ROM Monitor Version 10.0b39
                                O/S        Version 12.3-20121220.0 by userb on 2012-
FPC 5                           ROM        Juniper ROM Monitor Version 10.0b39
                                O/S        Version 12.3-20121220.0 by userb on 2012-
FPC 6                           ROM        Juniper ROM Monitor Version 10.4b1
                                O/S        Version 12.3-20121220.0 by userb on 2012-
FPC 7                           ROM        Juniper ROM Monitor Version 10.1b3
                                O/S        Version 12.3-20121220.0 by userb on 2012-
FPC 8                           ROM        Juniper ROM Monitor Version 10.4b1
                                O/S        Version 12.3-20121220.0 by userb on 2012-
FPC 9                           ROM        Juniper ROM Monitor Version 10.4b1
                                O/S        Version 12.3-20121220.0 by userb on 2012-
SPMB 0                          ROM        Juniper ROM Monitor Version 12.1b1
                                O/S        Version 12.3-20121220.0 by userb on 2012-
SPMB 1                          ROM        Juniper ROM Monitor Version 12.1b1
                                O/S        Version 12.3-20121220.0 by userb on 2012-
```

show chassis firmware (MX2020 Router)

```
user@host> show chassis firmware
Part                    Type       Version
FPC 0                   ROM        Juniper ROM Monitor Version 10.0b39
                        O/S        Version 12.3-20130415.0 by userb on 2013-
FPC 1                   ROM        Juniper ROM Monitor Version 10.0b39
                        O/S        Version 12.3-20130415.0 by userb on 2013-
FPC 2                   ROM        Juniper ROM Monitor Version 10.0b39
                        O/S        Version 12.3-20130415.0 by userb on 2013-
FPC 3                   ROM        Juniper ROM Monitor Version 10.0b39
                        O/S        Version 12.3-20130415.0 by userb on 2013-
FPC 4                   ROM        Juniper ROM Monitor Version 10.0b39
                        O/S        Version 12.3-20130415.0 by userb on 2013-
FPC 5                   ROM        Juniper ROM Monitor Version 10.0b39
                        O/S        Version 12.3-20130415.0 by userb on 2013-
FPC 6                   ROM        Juniper ROM Monitor Version 10.0b39
                        O/S        Version 12.3-20130415.0 by userb on 2013-
FPC 7                   ROM        Juniper ROM Monitor Version 10.0b39
                        O/S        Version 12.3-20130415.0 by userb on 2013-
FPC 8                   ROM        Juniper ROM Monitor Version 10.0b39
                        O/S        Version 12.3-20130415.0 by userb on 2013-
FPC 9                   ROM        Juniper ROM Monitor Version 10.0b39
                        O/S        Version 12.3-20130415.0 by userb on 2013-
FPC 10                  ROM        Juniper ROM Monitor Version 10.0b39
                        O/S        Version 12.3-20130415.0 by userb on 2013-
FPC 11                  ROM        Juniper ROM Monitor Version 10.0b39
                        O/S        Version 12.3-20130415.0 by userb on 2013-
FPC 12                  ROM        Juniper ROM Monitor Version 10.0b39
                        O/S        Version 12.3-20130415.0 by userb on 2013-
FPC 13                  ROM        Juniper ROM Monitor Version 10.0b39
                        O/S        Version 12.3-20130415.0 by userb on 2013-
FPC 14                  ROM        Juniper ROM Monitor Version 10.0b39
                        O/S        Version 12.3-20130415.0 by userb on 2013-
FPC 15                  ROM        Juniper ROM Monitor Version 10.0b39
                        O/S        Version 12.3-20130415.0 by userb on 2013-
FPC 16                  ROM        Juniper ROM Monitor Version 10.0b39
                        O/S        Version 12.3-20130415.0 by userb on 2013-
FPC 17                  ROM        Juniper ROM Monitor Version 10.0b39
                        O/S        Version 12.3-20130415.0 by userb on 2013-
FPC 18                  ROM        Juniper ROM Monitor Version 10.0b39
                        O/S        Version 12.3-20130415.0 by userb on 2013-
FPC 19                  ROM        Juniper ROM Monitor Version 10.0b39
                        O/S        Version 12.3-20130415.0 by userb on 2013-
SPMB 0                  ROM        Juniper ROM Monitor Version 12.1b1
                        O/S        Version 12.3-20130415.0 by userb on 2013-
SPMB 1                  ROM        Juniper ROM Monitor Version 12.1b1
                        O/S        Version 12.3-20130415.0 by userb on 2013-
```

show chassis firmware (MX2008 Router)

```
user@host> show chassis firmware

Part                    Type       Version
FPC 0                   ROM        Juniper ROM Monitor Version 10.1b3
                        O/S        Version 17.2-20170412.0 by builder on
2017-04-12 01:15:48 UTC
FPC 3                   ROM        Juniper ROM Monitor Version 13.3b1
                        O/S        Version 17.2-20170412.0 by builder on
2017-04-12 01:16:31 UTC
```

```
FPC 5                    ROM        Juniper ROM Monitor Version 13.3b1
                         O/S        Version 17.2-20170412.0 by builder on
2017-04-12 01:16:31 UTC
FPC 7                    ROM        Juniper ROM Monitor Version 11.4b2
                         O/S        Version 17.2-20170412.0 by builder on
2017-04-12 01:15:48 UTC
FPC 9                    ROM        Juniper ROM Monitor Version 13.2b1
                         O/S        Version 17.2-20170412.0 by builder on
2017-04-12 01:15:58 UTC
```

show chassis firmware (MX10003)

```
user@host> show chassis firmware

Part                     Type       Version
RE 0                     PRI BIOS   CBEP_P_SUM0_00.11.01
                         RE-FPGA    402
RE 1                     PRI BIOS   CBEP_P_SUM0_00.11.01
                         RE-FPGA    301
FPC 0                    ROM        PC Bios
                         O/S        Version 17.3-20170719.0 by builder on
2017-07-19 01:27:58 UTC
FPC 1                    ROM        PC Bios
                         O/S        Version 17.3-20170719.0 by builder on
2017-07-19 01:27:58 UTC
```

show chassis firmware (MX204 Router)

```
user@host> show chassis firmware

Part                     Type       Version
RE 0                     PRI BIOS   CBEP_P_SUM1_00.11.01
                         RE-FPGA    300
FPC                      ROM        PC Bios
                         O/S        Version 17.4I20171105_0609_aahluwalia by
aahluwalia on 2017-11-05 06:09:28 UTC
```

show chassis firmware (MX10008 Router)

```
user@host> show chassis firmware
Part                     Type       Version
RE 0                     PRI BIOS   CBEP_P_VAL0_00.14.1
                         FPGA       264.0
                         RE-FPGA    41.0
                         RE-SSD1    SF-SBR12050
                         RE-SSD2    SF-SBR12050
                         i40e-NVM   6.01
RE 1                     PRI BIOS   CBEP_P_VAL0_00.13.01
                         FPGA       261.0
                         RE-FPGA    41.0
                         RE-SSD1    SF-SBR12034
                         RE-SSD2    SF-SBR12034
                         i40e-NVM   5.02
FPC 0                    ROM        PC Bios
                        O/S        Version 18.4-20180716_dev_common.0 by builder
 on 2018-07-16 00:43:35 UTC
                         ROM Monitor 0 9.14.0
                         PCIE Sw(0) 1.0.0
                         MPCS(0)    0.2.0
                         I2CS CPLD  0.4.0
```

```
                          BOOT CPLD  0.4.0
FPC 2                     ROM        PC Bios
                         O/S        Version 18.4-20180716_dev_common.0 by builder
 on 2018-07-16 00:43:35 UTC
                          ROM Monitor 0 9.14.0
                          PCIE Sw(0) 1.0.0
                          MPCS(0)    0.2.0
                          I2CS CPLD  0.4.0
                          BOOT CPLD  0.4.0
FPC 3                     ROM        PC Bios
                         O/S        Version 18.4-20180716_dev_common.0 by builder
 on 2018-07-16 00:43:35 UTC
                          ROM Monitor 0 9.14.0
                          PCIE Sw(0) 1.0.0
                          MPCS(0)    0.4.0
                          I2CS CPLD  0.8.0
                          BOOT CPLD  0.8.0
FPM                       FPGA       1.9
FTC 0                     FPGA       2.0
FTC 1                     FPGA       2.0
SFB 0                     FPGA       3.0
SFB 1                     FPGA       3.0
SFB 2                     FPGA       3.0
SFB 3                     FPGA       3.0
SFB 4                     FPGA       3.0
SFB 5                     FPGA       3.0
```

show chassis firmware (MX240, MX480, MX960 Router with Application Services Modular Line Card)

```
user@host> show chassis firmware

Part                      Type       Version
FPC 1                     ROM        Juniper ROM Monitor Version 12.1b1
                          O/S        Version 12.2I21 by user1 on 2012-06-19 17:
```

show chassis firmware (EX4200 Switch)

```
user@switch> show chassis firmware

Part                    Type       Version
FPC 0                   uboot      U-Boot 1.1.6 (Feb  6 2008 - 11:27:42)
                        loader     FreeBSD/PowerPC U-Boot bootstrap loader 2.1
FPC 1                   uboot      U-Boot 1.1.6 (Feb  6 2008 - 11:27:42)
                        loader     FreeBSD/PowerPC U-Boot bootstrap loader 2.1
FPC 2                   uboot      U-Boot 1.1.6 (Feb  6 2008 - 11:27:42)
                        loader     FreeBSD/PowerPC U-Boot bootstrap loader 2.1
```

show chassis firmware (EX8200 Switch)

```
user@switch> show chassis firmware

Part                      Type       Version
FPC 0                     U-Boot     U-Boot 1.1.6 (Mar 25 2009 - 06:13:12) 2.4.0
                          loader     FreeBSD/PowerPC U-Boot bootstrap loader 2.2
FPC 3                     U-Boot     U-Boot 1.1.6 (Dec  4 2009 - 13:17:34) 3.1.0
                          loader     FreeBSD/PowerPC U-Boot bootstrap loader 2.2
FPC 5                     U-Boot     U-Boot 1.1.6 (Mar 25 2009 - 06:13:12) 2.4.0
                          loader     FreeBSD/PowerPC U-Boot bootstrap loader 2.2
FPC 7                     U-Boot     U-Boot 1.1.6 (Feb  6 2009 - 05:31:46) 2.4.0
                          loader     FreeBSD/PowerPC U-Boot bootstrap loader 2.2
```

```
Routing Engine 0         U-Boot     U-Boot 1.1.6 (Mar 25 2009 - 06:13:12) 2.4.0
                                    FreeBSD/PowerPC U-Boot bootstrap loader 2.2
                         loader
Routing Engine 1         U-Boot     U-Boot 1.1.6 (Mar 25 2009 - 06:13:12) 2.4.0
                         loader     FreeBSD/PowerPC U-Boot bootstrap loader 2.2
```

show chassis firmware (EX9200 Switch)

```
user@switch> show chassis firmware
 Part                     Type       Version
 FPC 2                    ROM        Juniper ROM Monitor Version 11.4b2
                          O/S        Version 14.1I20140312_0741 by userd o
FPC 3                     ROM        Juniper ROM Monitor Version 10.4b1
                          O/S        Version 14.1I20140312_0741 by userd o
```

show chassis firmware (EX9251 Switch)

```
user@switch> show chassis firmware
Part                     Type       Version
RE 0                     PRI BIOS   CBEP_P_SUM1_00.11.01
                         RE-FPGA    301
FPC                      ROM        PC Bios
                         O/S        Version 18.1R1.4 by builder on 2018-03-06
00:31:54 UTC
```

show chassis firmware (EX9253 Switch)

```
user@switch> show chassis firmware
Part                     Type       Version
RE 0                     PRI BIOS   CBEP_P_SUM1_00.11.01
                         RE-FPGA    402
RE 1                     PRI BIOS   CBEP_P_SUM1_00.11.01
                         RE-FPGA    402
FPC 0                    ROM        PC Bios
                        O/S        Version 18.2-20180129_dev_common.1 by builder
 on 2018-01-29 13:35:11 UTC
FPC 1                    ROM        PC Bios
                        O/S        Version 18.2-20180129_dev_common.1 by builder
 on 2018-01-29 13:35:11 UTC
```

show chassis firmware lcc (TX Matrix Router)

```
user@host> show chassis firmware lcc 0
lcc0-re0:
--------------------------------------------------------------------------
Part                     Type       Version
FPC 1                    ROM        Juniper ROM Monitor Version 6.4b18
                         O/S        Version 7.0-20040804.0 by userb on 2004-0
FPC 2                    ROM        Juniper ROM Monitor Version 6.4b20
                         O/S        Version 7.0-20040804.0 by userb on 2004-0
SPMB 0                   ROM        Juniper ROM Monitor Version 6.4b18
                         O/S        Version 7.0-20040804.0 by userb on 2004-0
```

show chassis firmware scc (TX Matrix Router)

```
user@host> show chassis firmware scc
scc-re0:
--------------------------------------------------------------------------
```

```
Part                    Type       Version
SPMB 0                  ROM        Juniper ROM Monitor Version 6.4b18
                        O/S        Version 7.0-20040804.0 by userb on 2004-0
```

show chassis firmware (TX Matrix Plus Router)

```
user@host> show chassis firmware
sfc0-re0:
--------------------------------------------------------------------------
Part                    Type       Version
Global FPC 4
Global FPC 6
Global FPC 7
Global FPC 12
Global FPC 14
Global FPC 15
Global FPC 20
Global FPC 21
Global FPC 22
Global FPC 23
Global FPC 24
Global FPC 25
Global FPC 26
Global FPC 28
Global FPC 29
Global FPC 31
SPMB 0                  ROM        Juniper ROM Monitor Version 9.5b1
                        O/S        Version 9.6-20090507.0 by userb on 2009-0
SPMB 1                  ROM        Juniper ROM Monitor Version 9.5b1
                        O/S        Version 9.6-20090507.0 by userb on 2009-0

lcc0-re1:
--------------------------------------------------------------------------
Part                    Type       Version
FPC 4                   ROM        Juniper ROM Monitor Version 9.0b2
                        O/S        Version 9.6-20090507.0 by userb on 2009-0
FPC 6                   ROM        Juniper ROM Monitor Version 9.0b2
                        O/S        Version 9.6-20090507.0 by userb on 2009-0
FPC 7                   ROM        Juniper ROM Monitor Version 9.0b2
                        O/S        Version 9.6-20090507.0 by userb on 2009-0
SPMB 0                  ROM        Juniper ROM Monitor Version 9.5b1
                        O/S        Version 9.6-20090507.0 by userb on 2009-0
SPMB 1                  ROM        Juniper ROM Monitor Version 9.5b1
                        O/S        Version 9.6-20090507.0 by userb on 2009-0

lcc1-re1:
--------------------------------------------------------------------------
Part                    Type       Version
FPC 4                   ROM        Juniper ROM Monitor Version 9.0b2
                        O/S        Version 9.6-20090507.0 by userb on 2009-0
FPC 6                   ROM        Juniper ROM Monitor Version 9.0b2
                        O/S        Version 9.6-20090507.0 by userb on 2009-0
FPC 7                   ROM        Juniper ROM Monitor Version 9.0b2
                        O/S        Version 9.6-20090507.0 by userb on 2009-0
SPMB 0                  ROM        Juniper ROM Monitor Version 9.5b1
                        O/S        Version 9.6-20090507.0 by userb on 2009-0
SPMB 1                  ROM        Juniper ROM Monitor Version 9.5b1
                        O/S        Version 9.6-20090507.0 by userb on 2009-0

lcc2-re1:
--------------------------------------------------------------------------
```

```
Part                    Type       Version
FPC 4                   ROM        Juniper ROM Monitor Version 9.0b2
                        O/S        Version 9.6-20090507.0 by userb on 2009-0
FPC 5                   ROM        Juniper ROM Monitor Version 9.0b2
                        O/S        Version 9.6-20090507.0 by userb on 2009-0
FPC 6                   ROM        Juniper ROM Monitor Version 9.0b2
                        O/S        Version 9.6-20090507.0 by userb on 2009-0
FPC 7                   ROM        Juniper ROM Monitor Version 7.5b4
                        O/S        Version 9.6-20090507.0 by userb on 2009-0
SPMB 0                  ROM        Juniper ROM Monitor Version 9.5b1
                        O/S        Version 9.6-20090507.0 by userb on 2009-0
SPMB 1                  ROM        Juniper ROM Monitor Version 9.5b1
                        O/S        Version 9.6-20090507.0 by userb on 2009-0

lcc3-re1:
--------------------------------------------------------------------------
Part                    Type       Version
FPC 0                   ROM        Juniper ROM Monitor Version 9.0b2
                        O/S        Version 9.6-20090507.0 by userb on 2009-0
FPC 1                   ROM        Juniper ROM Monitor Version 9.0b2
                        O/S        Version 9.6-20090507.0 by userb on 2009-0
FPC 2                   ROM        Juniper ROM Monitor Version 9.0b2
                        O/S        Version 9.6-20090507.0 by userb on 2009-0
FPC 4                   ROM        Juniper ROM Monitor Version 7.5b4
                        O/S        Version 9.6-20090507.0 by userb on 2009-0
FPC 5                   ROM        Juniper ROM Monitor Version 9.0b2
                        O/S        Version 9.6-20090507.0 by userb on 2009-0
FPC 7                   ROM        Juniper ROM Monitor Version 9.0b2
                        O/S        Version 9.6-20090507.0 by userb on 2009-0
SPMB 0                  ROM        Juniper ROM Monitor Version 9.5b1
                        O/S        Version 9.6-20090507.0 by userb on 2009-0
SPMB 1                  ROM        Juniper ROM Monitor Version 9.5b1
                        O/S        Version 9.6-20090507.0 by userb on 2009-0
```

show chassis firmware lcc (TX Matrix Plus Router)

```
user@host> show chassis firmware lcc 0
lcc0-re1:
--------------------------------------------------------------------------
Part                    Type       Version
FPC 4                   ROM        Juniper ROM Monitor Version 9.0b2
                        O/S        Version 9.6-20090507.0 by userb on 2009-0
FPC 6                   ROM        Juniper ROM Monitor Version 9.0b2
                        O/S        Version 9.6-20090507.0 by userb on 2009-0
FPC 7                   ROM        Juniper ROM Monitor Version 9.0b2
                        O/S        Version 9.6-20090507.0 by userb on 2009-0
SPMB 0                  ROM        Juniper ROM Monitor Version 9.5b1
                        O/S        Version 9.6-20090507.0 by userb on 2009-0
SPMB 1                  ROM        Juniper ROM Monitor Version 9.5b1
                        O/S        Version 9.6-20090507.0 by userb on 2009-0
```

show chassis firmware sfc (TX Matrix Plus Router)

```
user@host> show chassis firmware sfc 0
sfc0-re0:
--------------------------------------------------------------------------
Part                    Type       Version
Global FPC 4
Global FPC 6
Global FPC 7
```

```
Global FPC 12
Global FPC 14
Global FPC 15
Global FPC 20
Global FPC 21
Global FPC 22
Global FPC 23
Global FPC 24
Global FPC 25
Global FPC 26
Global FPC 28
Global FPC 29
Global FPC 31
SPMB 0                  ROM        Juniper ROM Monitor Version 9.5b1
                        O/S        Version 9.6-20090507.0 by userb on 2009-0
SPMB 1                  ROM        Juniper ROM Monitor Version 9.5b1
                        O/S        Version 9.6-20090507.0 by userb on 2009-0
```

show chassis firmware (QFX Series and OCX Series)

```
user@switch> show chassis firmware
Part                    Type       Version
FPC 0
Routing Engine 0        U-Boot     U-Boot 1.1.6 (Sep 15 2010 - 02:11:11) 1.0.5
                        loader     FreeBSD/MIPS U-Boot bootstrap loader 0.1
```

show chassis firmware (PTX1000 Packet Transport Routers)

```
user@host> show chassis firmware
Part                    Type       Version
FPC 0                   U-Boot      ***
                        loader           FreeBSD/i386 bootstrap loader 1.2
                        BIOS       V0018.2U
                        EC FPGA    2.0
                        MAIN_CPLD  1.f
                        MEZZ_CPLD  1.f
                        RE FPGA    2.3
```

show chassis firmware (PTX10008 Routers)

```
user@host> show chassis firmware
Part                    Type       Version
RE 0                    PRI BIOS   QFXS_SFP_00.31_01.01
                        GDN BIOS   QFXS_SFP_00.31_01.01
                        FPGA       2.4
                        RE-FPGA    3.2
RE 1                    PRI BIOS   QFXS_SFP_00.31_01.01
                        GDN BIOS   QFXS_SFP_00.31_01.01
                        FPGA       2.3
                        RE-FPGA    3.2
FPC 0                   U-Boot     Bank A: U-Boot 2011.12-gfbea47a (Feb 26 2016
 - 22:56:52)
                        CTRL FPGA  4.1
                        PORT FPGA  2.0
FPC 5                   U-Boot     Bank A: U-Boot 2011.12-gfbea47a (Feb 26 2016
 - 22:56:52)
                        CTRL FPGA  3.1
                        PORT FPGA  2.0
FPC 6                   U-Boot     Bank B: U-Boot 2011.12-gfbea47a (Feb 26 2016
 - 22:56:52)
```

```
                                CTRL FPGA  3.1
                                PORT FPGA  2.0
FPM                             FPGA       1.9
FTC 0                           FPGA       2.0
FTC 1                           FPGA       2.0
SIB 0                           FPGA       3.0
SIB 1                           FPGA       3.0
```

show chassis firmware interconnect-device (QFabric System)

```
user@switch> show chassis firmware interconnect-device interconnect1
Part                            Type       Version
Routing Engine 0                U-Boot     U-Boot 1.1.6 (May 10 2011 - 04:52:59) 1.1.1
                                loader     FreeBSD/MIPS U-Boot bootstrap loader 0.1
Routing Engine 1                U-Boot     U-Boot 1.1.6 (May 10 2011 - 04:52:59) 1.1.1
                                loader     FreeBSD/MIPS U-Boot bootstrap loader 0.1
```

show chassis firmware (ACX2000 Universal Metro Router)

```
user@switch> show chassis firmware
Part                            Type       Version
FPC                             O/S        Version 12.2I13 by user2 on 2012-05-29 06:
FEB                             O/S        Version 12.2I13 by user2 on 2012-05-29 06:
```

show chassis firmware detail (EX3300 Switch)

```
user@switch> show chassis firmware detail
FPC 0
   Boot SYSPLD                    3
   PoE firmware                   4.1.6
   PFE-0                          3
   PFE-1                          3
   PHY
      microcode                   0x514
   Boot Firmware
      uboot                       U-Boot 1.1.6 (Aug 21 2011 - 01:45:26)   1.0.0
      loader                      FreeBSD/arm U-Boot loader 1.0
```

show chassis firmware (MX Routers with Media Services Blade [MSB])

```
user@switch> show chassis firmware
Part                            Type       Version
FPC 1                           ROM        Juniper ROM Monitor Version 12.1b1
                                O/S        Version 12.2I21 by user1 on 2012-06-19 17:
```

show chassis firmware (ACX5048 Router)

```
user@host> show chassis firmware
Part                            Type       Version
FPC                             loader           FreeBSD/i386 bootstrap loader 1.2
                                BIOS       V0018.7
                                TMC FPGA   6.d8
                                PIC0 CPLD0 7.b
                                PIC0 CPLD1 7.b
                                PIC0 CPLD2 7.b
                                PIC0 CPLD3 7.b
                                PIC0 CPLD4 7.b
                                PIC0 CPLD5 7.b
                                PIC0 CPLD6 6.a
```

```
                                        MRE        17.9
                                        Power CPLD 3.a
```

show chassis firmware (ACX5096 Router)

```
user@host> show chassis firmware
Part                        Type       Version
FPC                         loader           FreeBSD/i386 bootstrap loader 1.2
                            BIOS       V0018.7
                            TMC FPGA   3000001.5
                            PIC0 CPLD0 7.b
                            PIC0 CPLD1 7.b
                            PIC0 CPLD2 7.b
                            PIC0 CPLD3 7.b
                            PIC0 CPLD4 7.b
                            PIC0 CPLD5 7.b
                            PIC0 CPLD6 c6.a
                            PIC0 CPLD7 -NA-
                            PIC0 CPLD8 7.b
                            PIC0 CPLD9 7.b
                            PIC0 CPLD10 7.b

                            PIC0 CPLD11 7.b

                            PIC0 CPLD12 7.b

                            PIC0 CPLD13 7.b

                            PIC0 CPLD14 c6.a

                            MRE        7.5
                            Power CPLD 4.1
```

show chassis firmware (ACX500 Router)

```
user@host> show chassis firmware

Part                        Type       Version
FPC                         O/S        Version 15.2-20150815_dev_rbu_1_16q1.0 by
userb on 2015-08-15 04:18:02 UTC
FEB                         O/S        Version 15.2-20150815_dev_rbu_1_16q1.0 by
userb on 2015-08-15 04:18:02 UTC
```

show chassis hardware

List of Syntax

Syntax

```
show chassis hardware
<detail | extensive>
<clei-models>
<models>
```

Syntax (EX Series)

```
show chassis hardware
<clei-models>
<detail | extensive>
<models>
<satellite [slot-id slot-id |device-alias alias-name]>
```

Syntax (T4000 Router)

```
show chassis hardware
<clei-models>
<detail | extensive>
<models>
```

Syntax (TX Matrix Router)

```
show chassis hardware
<clei-models>
<detail | extensive>
<models>
<lcc number | scc>
```

Syntax (TX Matrix Plus Router)

```
show chassis hardware
<clei-models>
<detail | extensive>
<models>
<lcc number | sfc number>
```

Syntax (MX Series Routers)

```
show chassis hardware
<detail | extensive>
<clei-models>
<models>
```

<all-members>
<local>
<member *member-id*>

Syntax (MX104, MX204, MX2010, MX2020, MX10003, MX10008, and MX2008 Universal Routing Platforms)

show chassis hardware
<clei-models>
<detail | extensive>
<models>
<satellite [slot-id *slot-id* |device-alias *alias-name*]>

Syntax (QFX Series)

show chassis hardware
<detail | extensive>
<clei-models>
<interconnect-device *name*>
<node-device *name*>
<models>

Syntax (OCX Series)

show chassis hardware
<detail | extensive>
<clei-models>
<models>

Syntax (PTX Series Packet Transport Routers)

show chassis hardware
<detail | extensive>
<clei-models>
<models>

Syntax (ACX Series Universal Metro Routers)

show chassis hardware
<detail | extensive>
<clei-models>
<models>

Syntax (ACX5048 and ACX5096 Routers)

show chassis hardware
<detail | extensive>
<clei-models>
<models>

Syntax (ACX500 Routers)

show chassis hardware
<detail | extensive>
<clei-models>
<models>

Release Information

Command introduced before Junos OS Release 7.4.
models option introduced in Junos OS Release 8.2.
Command introduced in Junos OS Release 9.0 for EX Series switches.
sfc option introduced in Junos OS Release 9.6 for the TX Matrix Plus router.
Command introduced in Junos OS Release 11.1 for QFX Series.

Command introduced in Junos OS Release 12.1X48 for PTX Series Packet Transport Routers.
Command introduced in Junos OS Release 12.2 for ACX Series Universal Metro Routers.
Command introduced in Junos OS Release 12.3 for MX2010 and MX2020 Universal Routing Platforms.
Information for **disk** and **usb** introduced in Junos OS Release 15.1X53-D60 for QFX10002, QFX10008, and QFX10016 switches.
Command introduced in Junos OS Release 15.1X54-D20 for ACX5048 and ACX5096 Routers.
Command introduced in Junos OS Release 17.2 for MX2008 Universal Routing Platforms.
Command introduced in Junos OS Release 17.2 for PTX10008 Routers.
Command introduced in Junos OS Release 17.3 for MX10003 Universal Routing Platforms.
Command introduced in Junos OS Release 17.3 for MX150 Router Appliance.
Command introduced in Junos OS Release 17.4 for MX204 Routers.
Command introduced in Junos OS Release 18.1R1 for EX9251 Switches.
Command introduced in Junos OS Release 18.2 for EX9253 Switches.
Command introduced in Junos OS Release 18.2R1 for MX10008 Routers

Description Display a list of all Flexible PIC Concentrators (FPCs) and PICs installed in the router or switch chassis, including the hardware version level and serial number.

In the EX Series switch command output, FPC refers to the following:

- On EX2200 switches, EX3200 switches, EX4200 standalone switches, and EX4500 switches—Refers to the switch; FPC *number* is always 0.
- On EX4200 switches in a Virtual Chassis configuration—Refers to the member of a Virtual Chassis; FPC *number* equals the member ID, from 0 through 9.
- On EX8208 and EX8216 switches—Refers to a line card; FPC *number* equals the slot number for the line card.

On QFX3500, QFX5100, and OCX Series standalone switches, and PTX1000 routers both the FPC and FPC *number* are always **0**.

On T4000 Type 5 FPCs, there are no **top temperature sensor** or **bottom temperature sensor** parameters. Instead, **fan intake temperature sensor** and **fan exhaust temperature sensors** parameters are displayed.

Starting from Junos OS Release 11.4, the output of the **show chassis hardware models** operational mode command displays the enhanced midplanes FRU model numbers (CHAS-BP3-MX240-S, CHAS-BP3-MX480-S or CHAS-BP3-MX960-S) based on the router. Prior to release 11.4, the FRU model numbers are left blank when the router has enhanced midplanes. Note that the enhanced midplanes are introduced through the Junos OS Release 13.3, but can be supported on all Junos OS releases.

Starting with Junos OS Release 14.1, the output of the **show chassis hardware detail | extensive | clei-models | models** operational mode command displays the new DC power supply module (PSM) and power distribution unit (PDU) that are added to provide power to the high-density FPC (FPC2-PTX-P1A) and other components in a PTX5000 Packet Transport Router.

Options

none—Display information about hardware. For a TX Matrix router, display information about the TX Matrix router and its attached T640 routers. For a TX Matrix Plus router, display information about the TX Matrix Plus router and its attached routers.

clei-models—(Optional) Display Common Language Equipment Identifier (CLEI) barcode and model number for orderable field-replaceable units (FRUs).

detail—(Optional) Include RAM and disk information in output.

extensive—(Optional) Display ID EEPROM information.

all-members—(MX Series routers only) (Optional) Display hardware-specific information for all the members of the Virtual Chassis configuration.

interconnect-device *name*—(QFabric systems only) (Optional) Display hardware-specific information for the Interconnect device.

lcc *number*—(TX Matrix routers and TX Matrix Plus router only) (Optional) On a TX Matrix router, display hardware information for a specified T640 router (line-card chassis) that is connected to the TX Matrix router. On a TX Matrix Plus router, display hardware information for a specified router (line-card chassis) that is connected to the TX Matrix Plus router.

Replace *number* with the following values depending on the LCC configuration:

- 0 through 3, when T640 routers are connected to a TX Matrix router in a routing matrix.
- 0 through 3, when T1600 routers are connected to a TX Matrix Plus router in a routing matrix.
- 0 through 7, when T1600 routers are connected to a TX Matrix Plus router with 3D SIBs in a routing matrix.
- 0, 2, 4, or 6, when T4000 routers are connected to a TX Matrix Plus router with 3D SIBs in a routing matrix.

local—(MX Series routers only) (Optional) Display hardware-specific information for the local Virtual Chassis members.

member *member-id*—(MX Series routers and EX Series switches) (Optional) Display hardware-specific information for the specified member of the Virtual Chassis configuration. Replace *member-id* variable with a value 0 or 1.

models—(Optional) Display model numbers and part numbers for orderable FRUs and, for components that use ID EEPROM format v2, the CLEI code.

node-device *name*—(QFabric systems only) (Optional) Display hardware-specific information for the Node device.

satellite [slot-id *slot-id* | device-alias *alias-name*]—(Junos Fusion only) (Optional) Display hardware information for the specified satellite device in a Junos Fusion, or for all satellite devices in the Junos Fusion if no satellite devices are specified.

scc—(TX Matrix router only) (Optional) Display hardware information for the TX Matrix router (switch-card chassis).

sfc *number*—(TX Matrix Plus router only) (Optional) Display hardware information for the TX Matrix Plus router (switch-fabric chassis). Replace *number* variable with **0**.

Additional Information

The **show chassis hardware detail** command now displays DIMM information for the following Routing Engines, as shown in Table 16 on page 395.

Table 16: Routing Engines Displaying DIMM Information

Routing Engines	Routers
RE-S-1800x2 and RE-S-1800x4	MX240, MX480, and MX960 routers
RE-A-1800x2	M120 and M320 routers

In Junos OS Release 11.4 and later, the output for the **show chassis hardware models** operational mode command for MX Series routers display the enhanced midplanes FRU model numbers—CHAS-BP3-MX240-S, CHAS-BP3-MX480-S, or CHAS-BP3-MX960-S—based on the router. In releases before Junos OS Release 11.4, the FRU model numbers are left blank when the router has enhanced midplanes. Note that the enhanced midplanes are introduced through Junos OS Release 13.3, but can be supported on all Junos OS releases.

Starting with Junos OS Release 17.3R1, the output of the **show chassis hardware** command displays the mode in which vMX is running (performance mode or lite mode) in the part number field for the FPC. **RIOT-PERF** indicates performance mode and **RIOT-LITE** indicates lite mode.

Required Privilege Level

view

Related Documentation

- *show chassis power*

List of Sample Output

Output Fields

Table 17 on page 400 lists the output fields for the **show chassis hardware** command. Output fields are listed in the approximate order in which they appear.

Table 17: show chassis hardware Output Fields

Field Name	Field Description	Level of Output
Item	Chassis component: • (EX Series switches)—Information about the chassis, Routing Engine (SRE and Routing Engine modules in EX8200 switches), power supplies, fan trays, and LCD panel. Also displays information about Flexible PIC Concentrators (FPCs) and associated Physical Interface Cards (PICs). Information about the backplane, midplane, and SIBs (SF modules) is displayed for EX8200 switches. • (MX Series routers and EX Series switches)—Information about the backplane, Routing Engine, Power Entry Modules (PEMs), and fan trays. Also displays information about Flexible PIC Concentrators (FPCs) and associated Physical Interface Cards (PICs), Modular Port Concentrators (MPCs) and associated Modular Interface Cards (MICs), or Dense Port Concentrators (DPCs). MX80 routers have a single Routing Engine and a built-in Packet Forwarding Engine that attaches directly to MICs. The Packet Forwarding Engine has two "pseudo" FPCs (FPC 0 and FPC1). MX80 routers also have a Forwarding Engine Board (FEB). MX104 routers have a built-in Packet forwarding Engine and a Forwarding Engine Board (FEB). The Packet Forwarding Engine of the MX104 router has three "pseudo" FPCs (FPC0, FPC1, and FPC2). • (M Series routers, except for the M320 router)—Information about the backplane; power supplies; fan trays; Routing Engine; maxicab (the connection between the Routing Engine and the backplane, for the M40 router only); SCB, SSB, SFM, or FEB; MCS and PCG (for the M160 router only); each FPC and PIC; and each fan, blower, and impeller. • (M120, M320, and T Series routers)—Information about the backplane, power supplies, fan trays, midplane, FPM (craft interface), CIP, PEM, SCG, CB, FPC, PIC, SFP, SPMB, and SIB. • (QFX Series)—Information about the chassis, Pseudo CB, Routing Engine, power supplies, fan trays, Interconnect devices, and Node devices. Also displays information about Flexible PIC Concentrators (FPCs) and associated Physical Interface Cards (PICs). • (PTX Series)—Information about the chassis, midplane, craft interface (FPM), power distribution units (PDUs) and Power Supply Modules (PSMs), Centralized Clock Generators (CCGs), Routing Engines, Control Boards (CBs) and Switch Processor Mezzanine Boards (SPMBs), Flexible PIC Concentrators (FPCs), PICs, Switch Interface Boards (SIBs), and fan trays (vertical and horizontal). • (MX2010, MX2020, and MX2008 routers)—Information about the chassis, midplane, craft interface (FPM), power midplane (PMP), Power Supply Modules (PSMs), Power Distribution Modules (PDMs), Routing Engines, Control Boards (CBs) and Switch Processor Mezzanine Boards (SPMBs), Switch Fabric Boards (SFBs), Flexible PIC Concentrators (FPCs), PICs, adapter cards (ADCs) and fan trays. • (vMX routers)—Information about the chassis, midplane, Routing Engines, and Control Boards (CBs). Also displays information about Flexible PIC Concentrators (FPCs) and associated Modular Interface Cards (MICs) and Physical Interface Cards (PICs).	All levels
Version	Revision level of the chassis component.	All levels
Part number	Part number of the chassis component.	All levels

Table 17: show chassis hardware Output Fields (continued)

Field Name	Field Description	Level of Output
Serial number	Serial number of the chassis component. The serial number of the backplane is also the serial number of the router chassis. Use this serial number when you need to contact Juniper Networks Customer Support about the router or switch chassis.	All levels
Assb ID or **Assembly ID**	(**extensive** keyword only) Identification number that describes the FRU hardware.	**extensive**
Assembly Version	(**extensive** keyword only) Version number of the FRU hardware.	**extensive**
Assembly Flags	(**extensive** keyword only) Flags.	**extensive**
FRU model number	(**clei-models**, **extensive**, and **models** keyword only) Model number of the FRU hardware component.	none specified
CLEI code	(**clei-models** and **extensive** keyword only) Common Language Equipment Identifier code. This value is displayed only for hardware components that use ID EEPROM format v2. This value is not displayed for components that use ID EEPROM format v1.	none specified
EEPROM Version	ID EEPROM version used by the hardware component: **0x00** (version 0), **0x01** (version 1), or **0x02** (version 2).	**extensive**

Description	Brief description of the hardware item:
	• Type of power supply.
	• Type of PIC. If the PIC type is not supported on the current software release, the output states **Hardware Not Supported**.
	• Type of FPC: **FPC Type 1**, **FPC Type 2**, **FPC Type 3**, **FPC Type 4** , or **FPC TypeOC192**.
	On EX Series switches, a brief description of the FPC.
	The following list shows the PIM abbreviation in the output and the corresponding PIM name.
	  • **2x FE**—Either two built-in Fast Ethernet interfaces (fixed PIM) or dual-port Fast Ethernet PIM
	  • **4x FE**—4-port Fast Ethernet ePIM
	  • **1x GE Copper**—Copper Gigabit Ethernet ePIM (one 10-Mbps, 100-Mbps, or 1000-Mbps port)
	  • **1x GE SFP**—SFP Gigabit Ethernet ePIM (one fiber port)
	  • **2x Serial**—Dual-port serial PIM
	  • **2x T1**—Dual-port T1 PIM
	  • **2x E1**—Dual-port E1 PIM
	  • **2x CT1E1**—Dual-port channelized T1/E1 PIM
	  • **1x T3**—T3 PIM (one port)
	  • **1x E3**—E3 PIM (one port)
	  • **4x BRI S/T**—4-port ISDN BRI S/T PIM
	  • **4x BRI U**—4-port ISDN BRI U PIM
	  • **1x ADSL Annex A**—ADSL 2/2+ Annex A PIM (one port, for POTS)
		All levels

Table 17: show chassis hardware Output Fields (continued)

Field Name	Field Description	Level of Output
	• **1x ADSL Annex B**—ADSL 2/2+ Annex B PIM (one port, for ISDN) • **2x SHDSL (ATM)**—G SHDSL PIM (2-port two-wire module or 1-port four-wire module) • **1x TGM550**—TGM550 Telephony Gateway Module (Avaya VoIP gateway module with one console port, two analog **LINE** ports, and two analog **TRUNK** ports) • **1x DS1 TIM510**—TIM510 E1/T1 Telephony Interface Module (Avaya VoIP media module with one E1 or T1 trunk termination port and ISDN PRI backup) • **4x FXS, 4xFXO, TIM514**—TIM514 Analog Telephony Interface Module (Avaya VoIP media module with four analog **LINE** ports and four analog **TRUNK** ports) • **4x BRI TIM521**—TIM521 BRI Telephony Interface Module (Avaya VoIP media module with four ISDN BRI ports) • **Crypto Accelerator Module**—For enhanced performance of cryptographic algorithms used in IP Security (IPsec) services • **MPC M 16x 10GE**—16-port 10-Gigabit Module Port Concentrator that supports SFP+ optical transceivers. (Not on EX Series switches.) • For hosts, the Routing Engine type. • For small form-factor pluggable transceiver (SFP) modules, the type of fiber: **LX**, **SX**, **LH**, or **T**. • LCD description for EX Series switches (except EX2200 switches). • **MPC2**—1-port MPC2 that supports two separate slots for MICs. • **MPC3E**—1-port MPC3E that supports two separate slots for MICs (MIC-3D-1X100GE-CFP and MIC-3D-20GE-SFP) on MX960, MX480, and MX240 routers. The MPC3E maps one MIC to one PIC (1 MIC, 1 PIC), which differs from the mapping of legacy MPCs. • 100GBASE-LR4, pluggable CFP optics • Supports the Enhanced MX Switch Control Board with fabric redundancy and existing SCBs without fabric redundancy. • Interoperates with existing MX Series line cards, including Flexible Port Concentrators (FPC), Dense Port Concentrators (DPCs), and Modular Port Concentrators (MPCs). • **MPC4E**—Fixed configuration MPC4E that is available in two flavors: MPC4E-3D-32XGE-SFPP and MPC4E-3D-2CGE-8XGE on MX2020, MX960, MX480, and MX240 routers. • LCD description for MX Series routers	

Sample Output

show chassis hardware (EX8216 Switch)

```
user@host> show chassis hardware
Hardware inventory:
Item             Version  Part number  Serial number     Description
Chassis          REV 06                CY0109220035      EX8216
Midplane         REV 06   710-016845   BA0909120112      EX8216-MP
CB 0             REV 22   710-020771   AX0109197723      EX8216-RE320
CB 1             REV 22   710-020771   AX0109197726      EX8216-RE320
  Routing Engine 1        BUILTIN      BUILTIN           RE-EX8216
```

```
FPC 3            REV 19   710-020683   BC0109083125      EX8200-48F
  CPU            REV 13   710-020598   BF0109144549      EX8200-CPU
FPC 4            REV 17   710-020683   BC0108500127      EX8200-48F
  CPU            REV 10   710-020598   BF0108460510      EX8200-CPU
  PIC 0                   BUILTIN      BUILTIN           48x 100 Base-QFX/1000
Base-X
    Xcvr 1       REV 01   740-011613   PE70V89           SFP-SX
    Xcvr 11      REV 01   740-011613   PE70YCE           SFP-SX
    Xcvr 12      REV 01   740-011613   PE70VSH           SFP-SX
    Xcvr 13      REV 01   740-011613   E08C02063         SFP-SX
    Xcvr 14      REV 01   740-011613   PE70VKU           SFP-SX
    Xcvr 15      REV 01   740-011613   E08E03372         SFP-SX
    Xcvr 21      REV 01   740-011613   PE70VAD           SFP-SX
    Xcvr 22      REV 01   740-011613   E08E01228         SFP-SX
    Xcvr 23      REV 01   740-011613   PE70VSL           SFP-SX
    Xcvr 24      REV 01   740-011613   E08E03409         SFP-SX
    Xcvr 25      REV 01   740-011613   PE70VL4           SFP-SX
    Xcvr 26      REV 01   740-011613   PDQ4L2Z           SFP-SX
    Xcvr 27      REV 01   740-011613   PE70WFK           SFP-SX
    Xcvr 28      REV 01   740-011782   PBD2B5U           SFP-SX
    Xcvr 29      REV 01   740-011613   PE70UQX           SFP-SX
    Xcvr 30      REV 01   740-011613   PE70VL5           SFP-SX
    Xcvr 31      REV 01   740-011613   PE70V0F           SFP-SX
    Xcvr 32      REV 01   740-011613   E08C02052         SFP-SX
    Xcvr 33      REV 01   740-011613   E08C02197         SFP-SX
    Xcvr 34      REV 01   740-011613   PE70V0L           SFP-SX
    Xcvr 35      REV 01   740-011613   E08E03390         SFP-SX
    Xcvr 36      REV 01   740-011613   PDQ4VL9           SFP-SX
    Xcvr 37      REV 01   740-011613   E08E03370         SFP-SX
    Xcvr 38      REV 01   740-011613   E08E03362         SFP-SX
    Xcvr 39      REV 01   740-011613   E08C02065         SFP-SX
    Xcvr 40      REV 01   740-011613   E08E03405         SFP-SX
    Xcvr 41      REV 01   740-011613   E08E03411         SFP-SX
    Xcvr 43      REV 01   740-011613   E08C02171         SFP-SX
    Xcvr 45      REV 01   740-011613   E08E03410         SFP-SX
FPC 13           REV 16   710-016837   BB0109051344      EX8200-8XS
  CPU
SIB 0            REV 10   710-021613   AY0109166244      EX8216-SF320
SIB 1            REV 10   710-021613   AY0109166357      EX8216-SF320
SIB 2            REV 10   710-021613   AY0109166362      EX8216-SF320
SIB 3            REV 10   710-021613   AY0109166338      EX8216-SF320
SIB 4            REV 10   710-021613   AY0109166350      EX8216-SF320
SIB 5            REV 10   710-021613   AY0109166365      EX8216-SF320
SIB 6            REV 10   710-021613   AY0109166361      EX8216-SF320
SIB 7            REV 10   710-021613   AY0109166399      EX8216-SF320
PSU 0            REV 17   740-021466   BG0709170003      EX8200-AC2K
PSU 1            REV 17   740-021466   BG0709170004      EX8200-AC2K
PSU 2            REV 17   740-021466   BG0709170020      EX8200-AC2K
PSU 3            REV 17   740-021466   BG0709170017      EX8200-AC2K
PSU 4            REV 17   740-021466   BG0709170008      EX8200-AC2K
PSU 5            REV 17   740-021466   BG0709170018      EX8200-AC2K
Top Fan Tray
  FTC 0          REV 4    760-022620   CX1209140212      EX8216-FT
  FTC 1          REV 4    760-022620   CX1209140212      EX8216-FT
Bottom Fan Tray
  FTC 0          REV 4    760-022620   CX1209140211      EX8216-FT
  FTC 1          REV 4    760-022620   CX1209140211      EX8216-FT
LCD 0            REV 04   710-025742   CE0109186919      EX8200 LCD
```

show chassis hardware clei-models (EX8216 Switch)

```
user@host> show chassis hardware clei-models
Hardware inventory:
Item             Version  Part number  CLEI code         FRU model number
Midplane         REV 08   710-016845
PSU 0            REV 05   740-023002   COUPAEAEAA        EX8200-PWR-AC3KR
PSU 1            REV 05   740-023002   COUPAEAEAA        EX8200-PWR-AC3KR
PSU 2            REV 05   740-023002   COUPAEAEAA        EX8200-PWR-AC3KR
PSU 3            REV 05   740-023002   COUPAEAEAA        EX8200-PWR-AC3KR
PSU 4            REV 05   740-023002   COUPAEAEAA        EX8200-PWR-AC3KR
PSU 5            REV 05   740-023002   COUPAEAEAA        EX8200-PWR-AC3KR
Top Fan Tray
Bottom Fan Tray
```

show chassis hardware clei-models (T1600 Router)

```
user@host> show chassis hardware clei-models
Hardware inventory:
Item             Version  Part number  CLEI code         FRU model number
Midplane         REV 03   710-005608                     CHAS-BP-T640-S
FPM Display      REV 05   710-002897                     CRAFT-T640-S
CIP              REV 06   710-002895                     CIP-L-T640-S
PEM 0            Rev 07   740-017906   IPUPAC7KTA        PWR-T1600-3-80-DC-S
PEM 1            Rev 18   740-002595                     PWR-T-DC-S
SCG 0            REV 15   710-003423                     SCG-T-S
Routing Engine 0 REV 08   740-014082                     RE-A-2000-4096-S
Routing Engine 1 REV 07   740-014082                     RE-A-2000-4096-S
CB 0             REV 05   710-007655                     CB-T-S
CB 1             REV 03   710-017707                     CB-T-S
FPC 0            REV 07   710-013558                     T640-FPC2-E2
  PIC 0          REV 01   750-010618                     PB-4GE-SFP
  PIC 1          REV 06   750-001900                     PB-1OC48-SON-SMSR
  PIC 2          REV 14   750-001901                     PB-4OC12-SON-SMIR
  PIC 3          REV 07   750-001900                     PB-1OC48-SON-SMSR
FPC 1            REV 06   710-013553                     T640-FPC1-E2
  PIC 0          REV 08   750-001072                     P-1GE-SX
  PIC 1          REV 10   750-012266                     PB-4GE-TYPE1-SFP-IQ2
  PIC 2          REV 22   750-005634                     PB-1CHOC12SMIR-QPP
FPC 2
  PIC 0          REV 16   750-007141                     PC-10GE-SFP
  PIC 1          REV 06   750-015217                     PC-8GE-TYPE3-SFP-IQ2
  PIC 2          REV 05   750-004695                     PC-TUNNEL
  PIC 3          REV 17   750-009553                     PC-4OC48-SON-SFP
FPC 3            REV 01   710-010154                     T640-FPC3-E
  PIC 0          REV 07   750-012793                     PC-1XGE-TYPE3-XFP-IQ2
  PIC 1          REV 25   750-007141                     PC-10GE-SFP
  PIC 2          REV 17   750-009553                     PC-4OC48-SON-SFP
  PIC 3          REV 32   750-003700                     PC-1OC192-SON-VSR
FPC 4            REV 16   710-013037                     T1600-FPC4-ES
 PIC 1           REV 06   750-034781                     PD-1CE-CFP
FPC 5            REV 02   710-013037                     T1600-FPC4-ES
  PIC 0          REV 16   750-012518                     PD-4OC192-SON-XFP
  PIC 1          REV 01   750-010850                     PD-1OC768-SON-SR
FPC 6            REV 14   710-013037                     T1600-FPC4-ES
  PIC 0          REV 11   750-017405                     PD-4XGE-XFP
  PIC 1          REV 13   750-017405                     PD-4XGE-XFP
FPC 7            REV 09   710-007529                     T640-FPC3
  PIC 0          REV 10   750-012793                     PC-1XGE-TYPE3-XFP-IQ2
  PIC 1          REV 01   750-015217                     PC-8GE-TYPE3-SFP-IQ2
```

```
  PIC 2          REV 01   750-015217                    PC-8GE-TYPE3-SFP-IQ2
  PIC 3          REV 15   750-009450                    PC-1OC192-SON-SR2
SIB 0            REV 07   710-013074                    SIB-I-T1600-S
SIB 1            REV 07   710-013074                    SIB-I-T1600-S
SIB 2            REV 07   710-013074                    SIB-I-T1600-S
SIB 3            REV 07   710-013074                    SIB-I-T1600-S
SIB 4            REV 07   710-013074                    SIB-I-T1600-S
Fan Tray 0                                              FANTRAY-T-S
Fan Tray 1                                              FANTRAY-T-S
Fan Tray 2                                              FAN-REAR-TX-T640-S
```

show chassis hardware clei-models (PTX10008 Routers)

```
user@host> show chassis hardware clei-models
Hardware inventory:
Item             Version  Part number  CLEI code         FRU model number
Midplane         REV 27   750-054097   CMMUM00ARA        QFX10008-CHAS
CB 0             REV 02   750-068820   CMUCAH3CTB        QFX10000-RE
CB 1             REV 02   750-068820   CMUCAH3CTB        QFX10000-RE
FPC 0            REV 36   750-051354   CMUIAM9BAA        QFX10000-36Q
  PIC 0                   BUILTIN
FPC 1            REV 33   750-051354   CMUIAM9BAA        QFX10000-36Q
  PIC 0                   BUILTIN
FPC 2            REV 32   750-051357   CMUIANABAA        QFX10000-30C
  PIC 0                   BUILTIN
FPC 3            REV 35   750-051357   CMUIANABAA        QFX10000-30C
  PIC 0                   BUILTIN
FPC 5            REV 08   750-068822   CMUIAM9BAB        QFX10000-36Q
  PIC 0                   BUILTIN
FPC 6            REV 08   750-068822   CMUIAM9BAB        QFX10000-36Q
  PIC 0                   BUILTIN
FPD Board        REV 07   711-054687
Power Supply 0   REV 02   740-049388   CMUPADNBAA        QFX10000-PWR-AC
Power Supply 1   REV 02   740-049388   CMUPADNBAA        QFX10000-PWR-AC
Power Supply 2   REV 02   740-049388   CMUPADNBAA        QFX10000-PWR-AC
Power Supply 3   REV 02   740-049388   CMUPADNBAA        QFX10000-PWR-AC
Power Supply 4   REV 02   740-049388   CMUPADNBAA        QFX10000-PWR-AC
Power Supply 5   REV 02   740-049388   CMUPADNBAA        QFX10000-PWR-AC
FTC 0            REV 14   750-050108   CMUCAHZCAA        QFX10008-FAN-CTRL
FTC 1            REV 14   750-050108   CMUCAHZCAA        QFX10008-FAN-CTRL
Fan Tray 0       REV 09   760-054372   CMUCAHYCAA        QFX10008-FAN
Fan Tray 1       REV 09   760-054372   CMUCAHYCAA        QFX10008-FAN
SIB 0            REV 24   750-050058   CMUCAH0CAA        QFX10008-SF
SIB 1            REV 24   750-050058   CMUCAH0CAA        QFX10008-SF
SIB 2            REV 24   750-050058   CMUCAH0CAA        QFX10008-SF
SIB 3            REV 24   750-050058   CMUCAH0CAA        QFX10008-SF
SIB 4            REV 24   750-050058   CMUCAH0CAA        QFX10008-SF
SIB 5            REV 23   750-050058   CMUCAH0CAA        QFX10008-SF
```

show chassis hardware clei-models (PTX10016 Routers)

```
user@host> show chassis hardware clei-models
Hardware inventory:
Item             Version  Part number  CLEI code         FRU model number
Midplane         REV 24   750-077138   CMMUN00ARA        JNP10016
CB 0             REV 04   711-065897   PROTOXCLEI        PROTO-ASSEMBLY
CB 1             REV 05   711-065897   PROTOXCLEI        PROTO-ASSEMBLY
FPC 2
  PIC 0                   BUILTIN
FPC 4            REV 35   750-071976   CMUIANABAA        JNP10K-LC1101
```

```
  PIC 0                     BUILTIN
FPC 5            REV 13    750-068822   CMUIAM9BAC        QFX10000-36Q
  PIC 0                     BUILTIN
FPC 6            REV 41    750-071976   CMUIANABAB        JNP10K-LC1101
  PIC 0                     BUILTIN
FPC 7            REV 35    750-071976   CMUIANABAA        JNP10K-LC1101
  PIC 0                     BUILTIN
FPC 8            REV 35    750-071976   CMUIANABAA        JNP10K-LC1101
  PIC 0                     BUILTIN
FPC 9            REV 41    750-071976   CMUIANABAB        JNP10K-LC1101
  PIC 0                     BUILTIN
FPC 10           REV 35    750-071976   CMUIANABAA        JNP10K-LC1101
  PIC 0                     BUILTIN
FPC 11           REV 35    750-071976   CMUIANABAA        JNP10K-LC1101
  PIC 0                     BUILTIN
FPC 13           REV 41    750-071976   CMUIANABAB        JNP10K-LC1101
  PIC 0                     BUILTIN
FPC 15           REV 37    750-071976   CMUIANABAA        JNP10K-LC1101
  PIC 0                     BUILTIN
Power Supply 0   REV 01    740-073147   CMUPADPBAA        JNP10K-PWR-DC
Power Supply 1   REV 01    740-073147   CMUPADPBAA        JNP10K-PWR-DC
Power Supply 2   REV 01    740-073147   CMUPADPBAA        JNP10K-PWR-DC
Power Supply 3   REV 01    740-073147   CMUPADPBAA        JNP10K-PWR-DC
Power Supply 4   REV 01    740-073147   CMUPADPBAA        JNP10K-PWR-DC
Power Supply 5   REV 01    740-073147   CMUPADPBAA        JNP10K-PWR-DC
Power Supply 6   REV 01    740-073147   CMUPADPBAA        JNP10K-PWR-DC
Power Supply 7   REV 01    740-073147   CMUPADPBAA        JNP10K-PWR-DC
Power Supply 8   REV 01    740-073147   CMUPADPBAA        JNP10K-PWR-DC
Power Supply 9   REV 01    740-073147   CMUPADPBAA        JNP10K-PWR-DC
Fan Tray 0                                               QFX5100-FAN-AFO
Fan Tray 1                                               QFX5100-FAN-AFO
SIB 0            REV 15    750-077140   CMUCAH6CAA        JNP10016-SF
SIB 1            REV 15    750-077140   CMUCAH6CAA        JNP10016-SF
SIB 2            REV 15    750-077140   CMUCAH6CAA        JNP10016-SF
SIB 3            REV 15    750-077140   CMUCAH6CAA        JNP10016-SF
SIB 4            REV 15    750-077140   CMUCAH6CAA        JNP10016-SF
SIB 5            REV 15    750-077140   CMUCAH6CAA        JNP10016-SF
FPD Board        REV 07    711-054687
```

show chassis hardware (EX2300-C Switch)

```
user@switch> show chassis hardware
Hardware inventory:
Item             Version  Part number  Serial number     Description
Chassis                                HV0215410003      EX2300-C-12P
Pseudo CB 0
Routing Engine 0          BUILTIN      BUILTIN           RE-EX2300C-12P
FPC 0            REV 04   650-059984   HV0215410003      EX2300-C-12P
  CPU                     BUILTIN      BUILTIN           FPC CPU
  PIC 0          REV 04   BUILTIN      BUILTIN           12x10/100/1000 Base-T
  PIC 1          REV 04   650-059984   HV0215410003      2x10G SFP/SFP+
    Xcvr 0       REV 01   740-021309   T09K00695         SFP+-10G-LR
    Xcvr 1       REV 01   740-030658   AD1146A05JT       SFP+-10G-USR
Power Supply 0                                           JPSU-170W-AC
```

show chassis hardware (EX2300 Switch)

```
user@switch> show chassis hardware
Hardware inventory:
Item             Version  Part number  Serial number     Description
```

```
Chassis                                 JY0215410033      EX2300-24P
Pseudo CB 0
Routing Engine 0          BUILTIN       BUILTIN           RE-EX2300-24P
FPC 0            REV 05   650-059968    JY0215410033      EX2300-24P
  CPU                     BUILTIN       BUILTIN           FPC CPU
  PIC 0          REV 05   BUILTIN       BUILTIN           24x10/100/1000 Base-T
  PIC 1          REV 05   650-059968    JY0215410033      4x10G SFP/SFP+
    Xcvr 0       REV 01   740-030658    AD1125A03ES       SFP+-10G-USR
    Xcvr 1       REV 01   740-021308    AJP0TDZ           SFP+-10G-SR
    Xcvr 3       REV 01   740-021309    A9401FL           SFP+-10G-LR
Power Supply 0                                            JPSU-450W-AC-AFO
Fan Tray 0                                                Fan Module, Airflow Out
 (AFO)
Fan Tray 1                                                Fan Module, Airflow Out
 (AFO)
```

show chassis hardware detail (EX4200 Switch)

```
user@host> show chassis hardware detail
Hardware inventory:
Item             Version  Part number  Serial number     Description
Chassis                                BM0208327733      EX4200-24T
Routing Engine 0 REV 11   750-021256   BM0208327733      EX4200-24T, 8 POE
Routing Engine 0                       BM0208327733      EX4200-24T, 8 POE
FPC 0            REV 11   750-021256   BM0208327733      EX4200-24T, 8 POE
  CPU                     BUILTIN      BUILTIN           FPC CPU
  PIC 0                   BUILTIN      BUILTIN           24x 10/100/1000 Base-T
  PIC 1          REV 03B  711-021270   AR0208162285      4x GE SFP
  BRD            REV 08   711-021264   AK0208328289      EX4200-24T, 8 POE
Power Supply 0   REV 03   740-020957   AT0508346354      PS 320W AC
Fan Tray                                                 Fan Tray
```

show chassis hardware (EX4300 Switch)

```
user@host> show chassis hardware
Hardware inventory:
Item             Version  Part number  Serial number     Description
Chassis                                PD3713160055      EX4300-48P
Routing Engine 0 REV 04   650-044930   PD3713160055      EX4300-48P
FPC 0            REV 04   650-044930   PD3713160055      EX4300-48P
  CPU                     BUILTIN      BUILTIN           FPC CPU
  PIC 0          REV 04   BUILTIN      BUILTIN           48x 10/100/1000 Base-T
  PIC 1          REV 04   BUILTIN      BUILTIN           4x 40GE
Power Supply 0   REV 01   740-046871   1EDA3090026       JPSU-1100-AC-AFO-A
Fan Tray 0                                               Fan Module, Airflow Out
 (AFO)
Fan Tray 1                                               Fan Module, Airflow Out
 (AFO)
```

show chassis hardware models (EX4500 Switch)

```
user@host> show chassis hardware models
Hardware inventory:
Item             Version  Part number  Serial number     FRU model number
Routing Engine 0 REV 01   750-035700   GG0210271867      EX4500-40F-FB-C
FPC 0            REV 01   750-035700   GG0210271867      EX4500-40F-FB-C
  PIC 0                   BUILTIN      BUILTIN           EX4500-40F-FB-C
Power Supply 1   REV 01   740-029654   H884FS00JC09      EX4500-PWR1-AC-FB
```

show chassis hardware detail (EX9200 Switch)

```
user@switch> show chassis hardware

Hardware inventory:
Item             Version  Part number  Serial number     Description
Chassis                                JN111DA44RFB      EX9208
Midplane         REV 05   710-017414   TS2912            EX9208-BP
FPM Board        REV 02   710-017254   XN1804            Front Panel Display
PEM 0            Rev 01   740-022697   QCS0906C033       PS 1.2-1.7kW; 100-240V
AC in
PEM 1            Rev 01   740-022697   QCS0906C095       PS 1.2-1.7kW; 100-240V
AC in
Routing Engine 0 REV 08   740-031116   9009122883        RE-S-EX9200-1800X4
CB 0             REV 16   750-031391   CAAW4391          EX9200-SCBEF
PC 0             REV 07   750-049612   CABJ9312          EX9200 40x1G Copper
  CPU          REV 04   711-038484   CABH8268          MPCE PMB 2G
  MIC 0          REV 02   750-049607   CABT9623          40x 1GE RJ45
    PIC 0                 BUILTIN      BUILTIN           10x 1GE RJ45
    PIC 1                 BUILTIN      BUILTIN           10x 1GE RJ45
    PIC 2                 BUILTIN      BUILTIN           10x 1GE RJ45
    PIC 3                 BUILTIN      BUILTIN           10x 1GE RJ45
FPC 1            REV 10   710-013699   CAAN3529          EX9200-40x1G-SFP
  CPU            REV 04   711-038484   CAAL7608          MPCE PMB 2G
   MIC 0          REV 26   750-028392   CAAS5151          20x 1GE SFP
    PIC 0                 BUILTIN      BUILTIN           10x 1GE SFP
    PIC 1                 BUILTIN      BUILTIN           10x 1GE SFP
  MIC 1          REV 26   750-028392   CAAC8006          20x 1GE SFP
    PIC 2                 BUILTIN      BUILTIN           10x 1GE SFP
      Xcvr 8     REV 01   740-011613   E08L03674         SFP-SX
      Xcvr 9     REV 01   740-011613   E08M00243         SFP-SX
    PIC 3                 BUILTIN      BUILTIN           10x 1GE SFP
    FPC 3        REV 10   710-013699   CAAR5261          EX9200-40x1G-SFP
  CPU            REV 04   711-038484   CAAS2118          MPCE PMB 2G
   MIC 0          REV 26   750-028392   CAAS5067          20x 1GE SFP
    PIC 0                 BUILTIN      BUILTIN           10x 1GE SFP
      Xcvr 2     REV 01   740-031851   PNA7L8U           SFP-SX
      Xcvr 3     REV 02   740-011613   AM0943SEKGZ       SFP-SX
      Xcvr 4     REV 02   740-011613   AM0943SEJZ9       SFP-SX
    PIC 1                 BUILTIN      BUILTIN           10x 1GE SFP
  MIC 1          REV 26   750-028392   CAAS5132          20x 1GE SFP
    PIC 2                 BUILTIN      BUILTIN           10x 1GE SFP
      Xcvr 4     REV 01   740-011613   E08D02625         SFP-SX
      Xcvr 9     REV 02   740-011613   PJH4RD9           SFP-SX
    PIC 3                 BUILTIN      BUILTIN           10x 1GE SFP
      Xcvr 0     REV 01   740-011613   AM0813S8YME       SFP-SX
      Fan Tray                                           Left Fan Tray
```

show chassis hardware detail (EX9251 Switch)

```
user@switch> show chassis hardware
Hardware inventory:
Item             Version  Part number  Serial number     Description
Chassis                                BLANK             EX9251
Routing Engine 0          BUILTIN      BUILTIN           RE-S-2X00x6
CB 0             REV 05   750-069579   CAGT1382          EX9251
FPC 0                     BUILTIN      BUILTIN           MPC
  PIC 0                   BUILTIN      BUILTIN           4XQSFP28 PIC
    Xcvr 0       REV 01   740-044512   APF14500007NHC    QSFP+-40G-CU50CM
    Xcvr 2       REV 01   740-046565   QH21035H          QSFP+-40G-SR4
```

```
  PIC 1                    BUILTIN      BUILTIN           8XSFPP PIC
    Xcvr 0       REV 01    740-031980   AA15393URH7       SFP+-10G-SR
    Xcvr 1       REV 01    740-031980   AA162832LVG       SFP+-10G-SR
    Xcvr 2       REV 01    740-031980   MXA0NKJ           SFP+-10G-SR
    Xcvr 3       REV 01    740-031980   MXA0K75           SFP+-10G-SR
    Xcvr 4       REV 01    740-021308   MXA138L           SFP+-10G-SR
    Xcvr 5       REV 01    740-021308   13T511102684      SFP+-10G-SR
    Xcvr 6       REV 01    740-021308   MXA138E           SFP+-10G-SR
    Xcvr 7       REV 01    740-021308   MXA152N           SFP+-10G-SR
PEM 0            REV 02    740-070749   1F186390060       AC AFO 650W PSU
PEM 1            REV 02    740-070749   1F186390045       AC AFO 650W PSU
Fan Tray 0                                                Fan Tray, Front to Back
 Airflow - AFO
Fan Tray 1                                                Fan Tray, Front to Back
 Airflow - AFO
```

show chassis hardware detail (EX9253 Switch)

```
user@switch> show chassis hardware
Hardware inventory:
Item             Version  Part number  Serial number     Description
Chassis                                JN126145CJCB      EX9253
Midplane         REV 06   750-074276   CAJE4108          Midplane 2
Routing Engine 0          BUILTIN      BUILTIN           RE-S-2X00x6
Routing Engine 1          BUILTIN      BUILTIN           RE-S-2X00x6
CB 0             REV 24   750-067071   CAJF6414          Control Board
  Mezz           REV 14   711-066896   CAJF6327          Control Mezz Board
CB 1             REV 24   750-067071   CAJF6398          Control Board
  Mezz           REV 14   711-066896   CAJF6314          Control Mezz Board
FPC 0            REV 19   750-066879   CAJD1692          LC2103
  CPU                     BUILTIN      BUILTIN           SMPC PMB
  PIC 0                   BUILTIN      BUILTIN           6xQSFPP
    Xcvr 0       REV 01   740-054053   QH20019A          QSFP+-4X10G-SR
  PIC 1          REV 15   750-068806   CAJD1416          MIC1
    Xcvr 0       REV 01   740-061405   1ECQ1151163       QSFP-100GBASE-SR4
    Xcvr 1       REV 01   740-061405   1ECQ11511AK       QSFP-100GBASE-SR4
    Xcvr 2       REV 01   740-032986   QB160112          QSFP+-40G-SR4
FPC 1            REV 19   750-066879   CAJD1685          LC2103
  CPU                     BUILTIN      BUILTIN           SMPC PMB
  PIC 0                   BUILTIN      BUILTIN           6xQSFPP
  PIC 1          REV 15   750-068806   CAJD1393          MIC1
    Xcvr 0       REV 01   740-032986   QB120887          QSFP+-40G-SR4
    Xcvr 1       REV 01   740-032986   QD465034          QSFP+-40G-SR4
    Xcvr 2       REV 01   740-052009   UWE2CBQ           QSFP+-40G-LR4
    Xcvr 4       REV 01   740-032986   QB120701          QSFP+-40G-SR4
PEM 0            REV 01   740-066937   1HS17070027       JNP-PWR1600-AC
PEM 1            REV 01   740-066937   1HS17070151       JNP-PWR1600-AC
PEM 4            REV 01   740-066937   1HS17070090       JNP-PWR1600-AC
PEM 5            REV 01   740-066937   1HS16480119       JNP-PWR1600-AC
Fan Tray 0       REV 08   760-069329   CAJF6944          JNP FAN 3RU
Fan Tray 1       REV 08   760-069329   CAJF6863          JNP FAN 3RU
Fan Tray 2       REV 08   760-069329   CAJF6891          JNP FAN 3RU
Fan Tray 3       REV 08   760-069329   CAJF6937          JNP FAN 3RU
```

show chassis hardware detail (PTX10008 Routers)

```
user@switch> show chassis hardware detail

Hardware inventory:
Item             Version  Part number  Serial number     Description
```

```
Chassis                                 DE487             JNP10008 [PTX10008 -
PILOT BUILD V1.1]
Midplane         REV 27   750-054097   ACPD4307          Midplane 8
Routing Engine 0          BUILTIN      BUILTIN           RE-PTX-2X00x4
  vtbd0 15360 MB                                         Virtio Block Disk
  vtbd1 15360 MB                                         Virtio Block Disk
  ada0    128 MB  QEMU                 QM00002           Virtio Block Disk
  usb0 (addr 0.1) EHCI root HUB 0      Intel             uhub0
  usb1 (addr 0.2) product 0x0020 32    vendor 0x8087     uhub1
Routing Engine 1          BUILTIN      BUILTIN           RE-PTX-2X00x4
  vtbd0 15360 MB                                         Virtio Block Disk
  vtbd1 15360 MB                                         Virtio Block Disk
  ada0    128 MB  QEMU                 QM00002           Virtio Block Disk
  usb0 (addr 0.1) EHCI root HUB 0      Intel             uhub0
  usb1 (addr 0.2) product 0x0020 32    vendor 0x8087     uhub1
CB 0             REV 02   750-068820   ACNZ4440          Control Board
CB 1             REV 02   750-068820   ACNZ8284          Control Board
FPC 0            REV 36   750-051354   ACNP4679          LC1102 - 12C / 36Q /
144X
  CPU                       BUILTIN      BUILTIN           FPC CPU
  PIC 0                    BUILTIN      BUILTIN           12x100GE/36x40GE/144x10GE

    Xcvr 1       REV 01   740-058734   1ECQ113834D       QSFP-100GBASE-SR4
    Xcvr 5       REV 01   740-058734   1ECQ1137067       QSFP-100GBASE-SR4
    Xcvr 6       REV 01   740-054053   QF3205SD          QSFP+-4X10G-SR
    Xcvr 7       REV 01   740-058734   1ECQ11381MP       QSFP-100GBASE-SR4
    Xcvr 11      REV 01   740-061405   1ACQ110507K       QSFP-100GBASE-SR4
    Xcvr 13      REV 01   740-058734   1ECQ11390ZB       QSFP-100GBASE-SR4
    Xcvr 17      REV 01   740-058734   1ECQ11381M1       QSFP-100GBASE-SR4
    Xcvr 19      REV 01   740-058734   1ECQ11381JS       QSFP-100GBASE-SR4
    Xcvr 23      REV 01   740-058734   1ACQ112000E       QSFP-100GBASE-SR4
    Xcvr 25      REV 01   740-058734   1ECQ11381NT       QSFP-100GBASE-SR4
    Xcvr 28      REV 01   740-054053   QG1502WV          QSFP+-4X10G-SR
    Xcvr 29      REV 01   740-058734   1ACQ112000D       QSFP-100GBASE-SR4
    Xcvr 33      REV 01   740-058734   1ACQ1134065       QSFP-100GBASE-SR4
    Xcvr 34      REV 01   740-067442   XV20L4L           QSFP+-40G-SR4
FPC 1            REV 33   750-051354   ACNX8831          LC1102 - 12C / 36Q /
144X
  CPU                       BUILTIN      BUILTIN           FPC CPU
  PIC 0                    BUILTIN      BUILTIN           12x100GE/36x40GE/144x10GE

    Xcvr 5                   NON-JNPR     37700171YY0084    QSFP-100GBASE-LR4
    Xcvr 25                  NON-JNPR     GDA2017459        QSFP-100GBASE-LR4
    Xcvr 29                  NON-JNPR     GDF2008750        QSFP-100GBASE-LR4
FPC 2           REV 32   750-051357   ACPB0341          LC1101 - 30C / 30Q / 96X

  CPU                       BUILTIN      BUILTIN           FPC CPU
  PIC 0                    BUILTIN      BUILTIN           30x100GE/30x40GE/96x10GE

    Xcvr 0                   NON-JNPR     37700170YZC305    QSFP-100GBASE-LR4
    Xcvr 4                   NON-JNPR     37700170YZC306    QSFP-100GBASE-LR4
    Xcvr 9       REV 01   740-054053   QF36013S          QSFP+-4X10G-SR
    Xcvr 12      REV 01   740-067442   XV301AU           QSFP+-40G-SR4
    Xcvr 14      REV 01   740-043308   UWE2CG9           QSFP+-40G-LR4
    Xcvr 16      REV 01   740-043308   UWH141S           QSFP+-40G-LR4
    Xcvr 17      REV 01   740-058734   1ECQ11180VH       QSFP-100GBASE-SR4
    Xcvr 18      REV 01   740-054050   INFAJ0492237      QSFP+-4X10G-LR
    Xcvr 26      REV 01   740-058734   1ACQ111803N       QSFP-100GBASE-SR4
    Xcvr 27      REV 01   740-058734   1ACQ113405S       QSFP-100GBASE-SR4
FPC 3           REV 35   750-051357   ACPD2186          LC1101 - 30C / 30Q / 96X
```

```
  CPU                     BUILTIN      BUILTIN           FPC CPU
  PIC 0                  BUILTIN      BUILTIN           30x100GE/30x40GE/96x10GE

    Xcvr 0       REV 01   740-061409   1GCQA1470A3       QSFP-100GBASE-LR4-T2
    Xcvr 1       REV 01   740-061409   1GCQA1470XC       QSFP-100GBASE-LR4-T2
    Xcvr 7                NON-JNPR     FG4550500008      QSFP-100G-CWDM4
    Xcvr 24      REV 01   740-058734   1ECQ11381LX       QSFP-100GBASE-SR4
    Xcvr 29      REV 01   740-043308   UWE0UYS           QSFP+-40G-LR4
FPC 5            REV 08   750-068822   ACPF0057          LC1102 - 12C / 36Q /
144X
  CPU                     BUILTIN      BUILTIN           FPC CPU
  PIC 0                  BUILTIN      BUILTIN           12x100GE/36x40GE/144x10GE
FPC 6            REV 08   750-068822   ACPE9951          LC1102 - 12C / 36Q /
144X
  CPU                     BUILTIN      BUILTIN           FPC CPU
  PIC 0                  BUILTIN      BUILTIN           12x100GE/36x40GE/144x10GE

    Xcvr 1       REV 01   740-054053   QF3208LG          QSFP+-4X10G-SR
    Xcvr 7       REV 01   740-067442   XV20LGN           QSFP+-40G-SR4
    Xcvr 8       REV 01   740-067442   XV20VMV           QSFP+-40G-SR4
    Xcvr 9       REV 01   740-067442   XV20KCN           QSFP+-40G-SR4
    Xcvr 10      REV 01   740-067442   XU504QD           QSFP+-40G-SR4
    Xcvr 11      REV 01   740-067442   XU504X7           QSFP+-40G-SR4
    Xcvr 12      REV 01   740-067442   XU504W8           QSFP+-40G-SR4
    Xcvr 16      REV 01   740-032986   QF4301JP          QSFP+-40G-SR4
    Xcvr 17      REV 01   740-032986   QF4303AE          QSFP+-40G-SR4
    Xcvr 18      REV 01   740-054050   INFAJ0492400      QSFP+-4X10G-LR
    Xcvr 19      REV 01   740-054050   INFAJ0492142      QSFP+-4X10G-LR
    Xcvr 24      REV 01   740-032986   QF4301KB          QSFP+-40G-SR4
    Xcvr 25      REV 01   740-032986   QF4303YP          QSFP+-40G-SR4
    Xcvr 30      REV 01   740-067442   XV300ZX           QSFP+-40G-SR4
    Xcvr 31      REV 01   740-043308   UWH2KBW           QSFP+-40G-LR4
    Xcvr 34      REV 01   740-054053   QG1501YU          QSFP+-4X10G-SR
FPD Board        REV 07   711-054687   ACPC7142          Front Panel Display
Power Supply 0   REV 02   740-049388   1EDL62102N9       Power Supply AC
Power Supply 1   REV 02   740-049388   1EDL60300KX       Power Supply AC
Power Supply 2   REV 02   740-049388   1EDL60300DL       Power Supply AC
Power Supply 3   REV 02   740-049388   1EDL61701BT       Power Supply AC
Power Supply 4   REV 02   740-049388   1EDL62102P7       Power Supply AC
Power Supply 5   REV 02   740-049388   1EDL62102PP       Power Supply AC
FTC 0            REV 14   750-050108   ACPE4038          Fan Controller 8
FTC 1            REV 14   750-050108   ACPE4032          Fan Controller 8
Fan Tray 0       REV 09   760-054372   ACPD6799          Fan Tray 8
Fan Tray 1       REV 09   760-054372   ACNZ3584          Fan Tray 8
SIB 0            REV 24   750-050058   ACPD4587          Switch Fabric 8
SIB 1            REV 24   750-050058   ACNZ0635          Switch Fabric 8
SIB 2            REV 24   750-050058   ACPD4908          Switch Fabric 8
SIB 3            REV 24   750-050058   ACNZ0617          Switch Fabric 8
SIB 4            REV 24   750-050058   ACNZ0527          Switch Fabric 8
SIB 5            REV 23   750-050058   ACNX6980          Switch Fabric 8
```

show chassis hardware detail (PTX10016 Routers)

```
user@switch> show chassis hardware detail

Hardware inventory:
Item             Version  Part number  Serial number     Description
Chassis                                DH995             JNP10016 [PTX10016]
Midplane         REV 22   750-056555   ACPM7810          Midplane 16
Routing Engine 0          BUILTIN      BUILTIN           RE-PTX-2X00x4
  vtbd0 15360 MB                                         Virtio Block Disk
```

```
  vtbd1 15360 MB                                        Virtio Block Disk
  ada0    128 MB  QEMU                 QM00002          Virtio Block Disk
  usb0 (addr 0.1) EHCI root HUB 0      Intel            uhub0
  usb1 (addr 0.2) product 0x0020 32    vendor 0x8087    uhub1
Routing Engine 1          BUILTIN      BUILTIN          RE-PTX-2X00x4
  vtbd0 15360 MB                                        Virtio Block Disk
  vtbd1 15360 MB                                        Virtio Block Disk
  ada0    128 MB  QEMU                 QM00002          Virtio Block Disk
  usb0 (addr 0.1) EHCI root HUB 0      Intel            uhub0
  usb1 (addr 0.2) product 0x0020 32    vendor 0x8087    uhub1
CB 0             REV 03   750-068820   ACPL7238         Control Board
CB 1             REV 03   750-068820   ACPL7298         Control Board
FPC 1            REV 36   750-077140   ACNP4590         LC1102 - 12C / 36Q /
144X
  CPU                      BUILTIN      BUILTIN          FPC CPU
  PIC 0                   BUILTIN      BUILTIN          12x100GE/36x40GE/144x10GE

    Xcvr 0       REV 01   740-054053   QF3600AV         QSFP+-4X10G-SR
    Xcvr 35      REV 01   740-061405   1ACQ110507K      QSFP-100GBASE-SR4
FPC 3            REV 07   750-071975   CAHA2224         LC1102 - 12C / 36Q /
144X
  CPU                      BUILTIN      BUILTIN          FPC CPU
  PIC 0                   BUILTIN      BUILTIN          12x100GE/36x40GE/144x10GE

    Xcvr 0       REV 01   740-054053   QG1505YM         QSFP+-4X10G-SR
    Xcvr 11               NON-JNPR     GDA2017459       QSFP-100GBASE-LR4
    Xcvr 35               NON-JNPR     GDF2008750       QSFP-100GBASE-LR4
FPC 5            REV 13   750-068822   ACPD6501         LC1102 - 12C / 36Q /
144X
  CPU                      BUILTIN      BUILTIN          FPC CPU
  PIC 0                   BUILTIN      BUILTIN          12x100GE/36x40GE/144x10GE

    Xcvr 1       REV 01   740-058734   1ECQ11381LA      QSFP-100GBASE-SR4
    Xcvr 2       REV 01   740-043308   UWH141S          QSFP+-40G-LR4
    Xcvr 3       REV 01   740-043308   UWE2CG9          QSFP+-40G-LR4
FPC 6            REV 37   750-077140   ACNS2793         LC1102 - 12C / 36Q /
144X
  CPU                      BUILTIN      BUILTIN          FPC CPU
  PIC 0                   BUILTIN      BUILTIN          12x100GE/36x40GE/144x10GE

    Xcvr 0       REV 01   740-032986   QH0400VH         QSFP+-40G-SR4
    Xcvr 1       REV 01   740-032986   QH0400VM         QSFP+-40G-SR4
    Xcvr 35      REV 01   740-058734   1ECQ11390ZB      QSFP-100GBASE-SR4
FPC 8            REV 36   750-077140   ACNP4625         LC1102 - 12C / 36Q /
144X
  CPU                      BUILTIN      BUILTIN          FPC CPU
  PIC 0                   BUILTIN      BUILTIN          12x100GE/36x40GE/144x10GE

    Xcvr 1       REV 01   740-058732   1AMQA14206D      QSFP-100GBASE-LR4
    Xcvr 10      REV 01   740-032986   QF4301KB         QSFP+-40G-SR4
    Xcvr 24      REV 01   740-054050   INFAJ0492244     QSFP+-4X10G-LR
FPC 9           REV 35   750-071976   ACPD3055         LC1101 - 30C / 30Q / 96X

  CPU                      BUILTIN      BUILTIN          FPC CPU
  PIC 0                   BUILTIN      BUILTIN          30x100GE/30x40GE/96x10GE

    Xcvr 0                NON-JNPR     INGBT7970007     QSFP-100GBASE-LR4
    Xcvr 1                NON-JNPR     UWQ24D9          QSFP-100GBASE-LR4
    Xcvr 2                NON-JNPR     INGBT7970011     QSFP-100GBASE-LR4
    Xcvr 3                NON-JNPR     UX60AF1          QSFP-100G-CWDM4
    Xcvr 4                NON-JNPR     UX408JJ          QSFP-100GBASE-LR4
```

```
    Xcvr 11      REV 01   740-058734   1ECQ113835F       QSFP-100GBASE-SR4
    Xcvr 18               NON-JNPR     Q7496             QSFP-100G-CWDM4
    Xcvr 29      REV 01   740-058734   1ECQ11380LZ       QSFP-100GBASE-SR4
Power Supply 0   REV 02   740-049388   1EDL625039E       Power Supply AC
Power Supply 1   REV 02   740-049388   1EDL62503AD       Power Supply AC
Power Supply 2   REV 02   740-049388   1EDL625039P       Power Supply AC
Power Supply 3   REV 02   740-049388   1EDL702004E       Power Supply AC
Power Supply 4   REV 02   740-049388   1EDL625039D       Power Supply AC
Power Supply 5   REV 02   740-049388   1EDL63706JD       Power Supply AC
Power Supply 6   REV 02   740-049388   1EDL63706JH       Power Supply AC
FTC 0            REV 10   750-050309   ACPM2918          Fan Controller 16
FTC 1            REV 10   750-050309   ACPE8185          Fan Controller 16
Fan Tray 0       REV 10   760-077141   ACPV7288          Fan Tray 16
Fan Tray 1       REV 10   760-057901   ACPL0546          Fan Tray 16
SIB 0            REV 15   750-058270   ACPM2804          Switch Fabric 16
SIB 1            REV 15   750-058270   ACPM2808          Switch Fabric 16
SIB 2            REV 15   750-058270   ACPL4450          Switch Fabric 16
SIB 3            REV 15   750-058270   ACPJ9834          Switch Fabric 16
SIB 4            REV 15   750-058270   ACPM2814          Switch Fabric 16
SIB 5            REV 15   750-058270   ACPL4277          Switch Fabric 16
FPD Board        REV 07   711-054687   ACPL1407          Front Panel Display
```

show chassis hardware (M7i Router)

```
user@host> show chassis hardware
Hardware inventory:
Item             Version  Part number  Serial number     Description
Chassis                                31959             M7i
Midplane         REV 02   710-008761   CA0209            M7i Midplane
Power Supply 0   Rev 04   740-008537   PD10272           AC Power Supply
Routing Engine   REV 01   740-008846   1000396803        RE-5.0
CFEB             REV 02   750-009492   CA0166            Internet Processor IIv1
FPC 0                                                    E-FPC
  PIC 0          REV 04   750-003163   HJ6416            1x G/E, 1000 BASE-SX
  PIC 1          REV 04   750-003163   HJ6423            1x G/E, 1000 BASE-SX
  PIC 2          REV 04   750-003163   HJ6421            1x G/E, 1000 BASE-SX
  PIC 3          REV 02   750-003163   HJ0425            1x G/E, 1000 BASE-SX
FPC 1                                                    E-FPC
  PIC 2          REV 01   750-009487   HM2275            ASP - Integrated
  PIC 3          REV 01   750-009098   CA0142            2x F/E, 100 BASE-TX

Hardware inventory:
Item             Version  Part number  Serial number     Description
Chassis                                B1157             M7i
Midplane         REV 05   710-008761   DM0840            M7i Midplane
Power Supply 0   Rev 08   740-008537   TE53755           AC Power Supply
Routing Engine   REV 07   740-011202   1000736567        RE-850
CFEB             REV 09   750-010463   DK6952            Internet Processor II
FPC 0                                                    E-FPC
  PIC 0          REV 12   750-012838   DL7993            4x 1GE(LAN), IQ2
    Xcvr 0       REV 01   740-011614   PD94TDJ           SFP-LX10
    Xcvr 1       REV 01   740-011615   PAD5EER           UNSUPPORTED
    Xcvr 2       REV 01   740-011614   PD94THU           SFP-LX10
    Xcvr 3                NON-JNPR     PDC2E7A           SFP-LX10
  PIC 1          REV 03   750-023116   JT0203            4x CHSTM1 SDH CE SFP
    Xcvr 0       REV 01   740-012434   AGT063832PS       SFP-SR
    Xcvr 1       REV 01   740-012434   AGT063832LY       SFP-SR
    Xcvr 3       REV 01   740-016064   C06J19018         SFP-LR
  PIC 2          REV 15   750-014895   DM5757            MultiServices 100
  PIC 3          REV 01   750-025390   JW9448            12x T1/E1 CE
FPC 1                                                    E-FPC
```

```
  PIC 2                    BUILTIN      BUILTIN           1x Tunnel
  PIC 3          REV 09    750-009099   DM0899            1x G/E, 1000 BASE
    Xcvr 0       REV 01    740-012434   AGT0715OHGJ       UNSUPPORTED
Fan Tray                                                  Rear Fan Tray
```

show chassis hardware (M10 Router)

```
user@host> show chassis hardware
Hardware inventory:
Item             Version  Part number  Serial number     Description
Chassis                                1122              M10
Midplane         REV 1.1  710-001950   S/N AC6626
Power supply A   Rev 01   740-002497   S/N LC36095       AC
Power supply B   Rev 01   740-002497   S/N LC36100       AC
Display          REV 1.2  710-001995   S/N AC6656
Host                                   18000005dfb3fb01  teknor
FEB              REV 01   710-001948   S/N AC6632        Internet Processor II
FPC 0
  PIC 0          REV 08   750-001072   S/N AB2485        1x G/E, 1000 BASE-SX
  PIC 1          REV 01   750-000613   S/N AA1048        1x OC-12 SONET, SMIR
FPC 1
Fan Tray 0                                                FANTRAY-M10I-S
Fan Tray 1                                                FANTRAY-M10I-S
```

show chassis hardware models (M10 Router)

```
user@host> show chassis hardware models
Hardware inventory:
Item             Version  Part number  CLEI code         FRU model number
Midplane         REV 04   710-008920                     CHAS-MP-M10i-S
Power Supply 0   Rev 06   740-008537                     PWR-M10i-M7i-AC-S
Power Supply 1   Rev 06   740-008537                     PWR-M10i-M7i-AC-S
HCM 0            REV 03   710-010580                     HCM-M10i-S
HCM 1            REV 03   710-010580                     HCM-M10i-S
Routing Engine 0 REV 09   740-009459                     RE-400-256-S
CFEB 0           REV 05   750-010465                     FEB-M10i-M7i-S
FPC 0
  PIC 0          REV 10   750-002971                     PE-4OC3-SON-MM
  PIC 1          REV 11   750-002992                     PE-4FE-TX
  PIC 2          REV 03   750-002977                     PE-2OC3-ATM-MM
  PIC 3          REV 08   750-005724                     PE-2OC3-ATM2-MM
FPC 1
  PIC 2          REV 12   750-008425                     PE-AS
  PIC 3          REV 13   750-005636                     PE-4CHDS3-QPP
Fan Tray 0                                                FANTRAY-M10I-S
Fan Tray 1                                                FANTRAY-M10I-S
```

show chassis hardware (M20 Router)

```
user@host> show chassis hardware
Hardware inventory:
Item             Version  Part number  Serial number     Description
Chassis                                20033             M20
Backplane        REV 07   710-001517   S/N AA7940
Power supply B   Rev 01   740-001465   S/N 000001        AC
Display          REV 02   710-001519   S/N AA9704
Host 0                                 98000004f8f27501  teknor
SSB slot 0       REV 01   710-001951   S/N AD5905        Internet Processor II
  SSRAM bank 0   REV 01   710-001385   S00480            2 MB
  SSRAM bank 1   REV 01   710-001385   S00490            2 MB
```

```
  SSRAM bank 2   REV 01   710-001385   S001:?            2 MB
  SSRAM bank 3   REV 01   710-001385   S00483            2 MB
SSB slot 1       N/A      N/A          N/A               Backup
FPC 1            REV 01   710-001292   S/N AB7528
  SSRAM          REV 01   710-000077   S/N 304209        1 MB
  SDRAM bank 0   REV 01   710-000099   S/N 000603        64 MB
  SDRAM bank 1   REV 01   710-000099   S/N 000414        64 MB
  PIC 0          REV 03   750-000612   S/N AB8433        2x OC-3 ATM, MM
  PIC 1          REV 01   750-000616   S/N AA1168        1x OC-12 ATM, MM
  PIC 2          REV 01   750-000613   S/N AA1008        1x OC-12 SONET, SMIR
  PIC 3          REV 01   750-002501   S/N AD5810        4x E3
FPC 2            REV 01   710-001292   S/N AC0119
  SSRAM          REV 01   710-000077   S/N 503241        1 MB
  SDRAM bank 0   REV 01   710-000099   S/N 306835        64 MB
  SDRAM bank 1   REV 01   710-000099   S/N 306832        64 MB
Fan Tray 0                                               Front Upper Fan Tray
Fan Tray 1                                               Front Middle Fan Tray
Fan Tray 2                                               Front Bottom Fan Tray
Fan Tray 3                                               Rear Fan Tray
```

show chassis hardware models (M20 Router)

```
user@host> show chassis hardware models
Hardware inventory:
Item             Version  Part number  CLEI code         FRU model number
Backplane        REV 03   710-002334                     CHAS-MP-M20-S
Power Supply A   REV 06   740-001465                     PWR-M20-AC-S
Display          REV 04   710-001519                     CRAFT-M20-S
Routing Engine 0 REV 06   740-003239                     RE-333-768-S
Routing Engine 1 REV 06   740-003239                     RE-333-768-S
SSB 0            REV 02   710-001951                     SSB-E-M20
SSB 1            N/A      N/A
FPC 0            REV 03   710-003308                     FPC-E
  PIC 0          REV 08   750-002303                     P-4FE-TX
  PIC 1          REV 07   750-004745                     P-2MCDS3
  PIC 2          REV 03   750-002965                     PE-4CHDS3
FPC 1            REV 03   710-003308                     FPC-E
  PIC 0          REV 03   750-002914                     P-2OC3-ATM-MM
Fan Tray 0                                               FANTRAY-F-M20-S
Fan Tray 1                                               FANTRAY-F-M20-S
Fan Tray 2                                               FANTRAY-F-M20-S
Fan Tray 3                                               FANTRAY-R-M20-S
```

show chassis hardware (M40 Router)

```
user@host> show chassis hardware
Hardware inventory:
Item             Version  Part number  Serial number     Description
Backplane        REV 02   710-000073   S/N AA0053
Power supply A   Rev 2    740-000235   S/N 000042        DC
Maxicab          REV X1   710-000229   S/N AA0139
Minicab          REV X1   710-000482   S/N AA0201
Display          REV 06   710-000150   S/N AA0905
Host                                                     cpv5000
SCB              REV X1   710-000075   S/N AA0158        Internet Processor I
  SSRAM bank 0   REV 02   710-000077   S/N AA2267        1 MB
  SSRAM bank 1   REV 02   710-000077   S/N AA2270        1 MB
  SSRAM bank 2   REV 02   710-000077   S/N AA2269        1 MB
  SSRAM bank 3   REV 02   710-000077   S/N AA2268        1 MB
FPC 0            REV 01   710-000175   S/N AA0048
```

```
  SSRAM          REV 01   710-000077   S/N AA2333        1 MB
  SDRAM bank 0   REV 01   710-000099   S/N AA2332        64 MB
  SDRAM bank 1   REV X1   710-000099   S/N AA2337        64 MB
  PIC 0          REV 04   750-000613   S/N aa0343        1x OC-12 SONET, SMIR
  PIC 1          REV 04   750-000613   S/N AA0379        1x OC-12 SONET, SMIR
  PIC 2          REV 04   750-000613   S/N AA0377        1x OC-12 SONET, SMIR
  PIC 3          REV 04   750-000613   S/N AA0378        1x Tunnel
FPC 2            REV 01   710-000175   S/N AA0042
  SSRAM          REV 02   710-000077   S/N AA2288        1 MB
  SDRAM bank 0   REV 01   710-000099   S/N AA2331        64 MB
  SDRAM bank 1   REV 01   710-000099   S/N AA2330        64 MB
  PIC 0          REV X1   750-000603   S/N AA0143        4x OC-3 SONET, SMIR
  PIC 1          REV X1   750-000615   S/N AA0149        4x OC-3 SONET, MM
  PIC 2          REV X1   750-000611   S/N AA0148        4x OC-3 SONET, MM
  PIC 3          REV 04   750-000613   S/N AA0330        1x OC-12 SONET, SMIR
FPC 4            REV 01   710-000175   S/N AA0050
  SSRAM          REV 01   710-000077   S/N AA2327        1 MB
  SDRAM bank 0   REV 01   710-000099   S/N AA2329        64 MB
  SDRAM bank 1   REV 01   710-000099   S/N AA2328        64 MB
  PIC 0          REV 04   750-000613   S/N AA0320        1x OC-12 SONET, SMIR
  PIC 2          REV 05   750-000616   S/N AA1341        1x OC-12 ATM, MM
  PIC 3          REV 08   750-001072   S/N AB2462        1x G/E, 1000 BASE-SX
FPC 5            REV 10   710-000175   S/N AA7663
  SSRAM          REV 01   710-000077   S/N 501590        1 MB
  SDRAM bank 0   REV 01   710-000099   S/N 300949        64 MB
  SDRAM bank 1   REV 01   710-000099   S/N 300868        64 MB
  PIC 1          REV 01   750-001323   S/N AB1670        1x Tunnel
```

show chassis hardware (M40e Router)

```
user@host> show chassis hardware
Hardware inventory:
Item             Version  Part number  Serial number     Description
Chassis                                                  m40e
Midplane         REV 01   710-005071   AX3671
FPM CMB          REV 03   710-001642   AR9074
FPM Display      REV 03   710-001647   AR7331
CIP              REV 04   710-002649   BB4449
PEM 0            Rev 01   740-003787   MC12364           Power Entry Module
PEM 1            Rev 01   740-003787   MC12383           Power Entry Module
PCG 0            REV 07   710-001568   AG1332
PCG 1            REV 07   710-001568   AR3789
Host 0                                 3e000007c8176601  Present
MCS 0            REV 11   710-001226   AN5813
SFM 0 SPP        REV 07   710-001228   AG4676
SFM 0 SPR        REV 05   710-002189   AE4735            Internet Processor II
SFM 1 SPP        REV 07   710-001228   AP1347
SFM 1 SPR        REV 05   710-002189   BE0063            Internet Processor II
FPC 0            REV 01   710-011725   BE0669            M40e-EP-FPC Type 1
  CPU            REV 01   710-004600   BD9504
  PIC 0          REV 03   750-003737   AY3991            4x G/E, 1000 BASE-SX
FPC 1            REV 01   710-005197   BD9842            M40e-FPC Type 2
  CPU            REV 01   710-004600   BB4869
  PIC 0          REV 07   750-001900   AR8278            1x OC-48 SONET, SMSR
FPC 2            REV 02   710-005197   BD9824            M40e-FPC Type 2
  CPU            REV 01   710-004600   BD9531
  PIC 0          REV 03   750-003737   AY3986            4x G/E, 1000 BASE-SX
FPC 4            REV 02   710-005078   BE0664            M40e-FPC Type 1
  CPU            REV 01   710-004600   BD9559
  PIC 0          REV 03   750-001894   AG7963            1x G/E, 1000 BASE-SX
  PIC 2          REV 01   750-002575   AF2472            4x OC-3 SONET, SMIR
```

```
FPC 6            REV 02   710-005078   BE0652            M40e-FPC Type 1
  CPU            REV 01   710-004600   BD9607
  PIC 0          REV 02   750-002911   AN2286            4x F/E, 100 BASE-TX
  PIC 2          REV 01   750-002577   AP6345            4x OC-3 SONET, MM
```

show chassis hardware (M120 Router)

```
user@host> show chassis hardware
Hardware inventory:
Item             Version  Part number  Serial number     Description
Chassis                                JN000054AC        M120
Midplane         REV 01   710-013667   RB4170            M120 Midplane
FPM Board        REV 02   710-011407   CJ9186            M120 FPM Board
FPM Display      REV 02   710-011405   CJ9173            M120 FPM Display
FPM CIP          REV 02   710-011410   CJ9221            M120 FPM CIP
PEM 0            Rev 05   740-011936   RM28320           AC Power Entry Module
PEM 1            Rev 05   740-011936   RM28321           AC Power Entry Module
Routing Engine 0 REV 03   740-014080   1000642883        RE-A-1000
CB 0             REV 03   710-011403   CM8346            M120 Control Board
CB 1             REV 06   710-011403   CP6728            M120 Control Board
FPC 1            REV 02   710-015908   CP6925            M120 CFPC 10GE
  PIC 0                   BUILTIN      BUILTIN           1x 10GE(LAN/WAN) XFP
    Xcvr 0       REV 01   740-014279   62E204N00007      XFP-10G-LR
FPC 3            REV 03   710-011393   CJ9234            M120 FPC Type 2
  PIC 0          REV 16   750-008155   NB5229            2x G/E IQ, 1000 BASE
    Xcvr 0       REV 01   740-011613   P9F15JB           SFP-SX
    Xcvr 1       REV 01   740-007326   P4Q0R9G           SFP-SX
  PIC 1          REV 09   750-007745   CG4360            4x OC-3 SONET, SMIR
  PIC 2          REV 16   750-008155   ND7787            2x G/E IQ, 1000 BASE
    Xcvr 0       REV 01   740-011613   P9F12AS           SFP-SX
    Xcvr 1       REV 01   740-011613   P9F1ALU           SFP-SX
  PIC 3          REV 07   750-011800   JW1284            8x 1GE(LAN), IQ2
    Xcvr 0       REV 01   740-011613   P9F1AM6           SFP-SX
    Xcvr 6       REV 01   740-011613   P9F16NN           SFP-SX
    Xcvr 7       REV 01   740-011782   P8C29Y7           SFP-SX
  Board B        REV 02   710-011395   CN3754            M120 FPC Mezz
FPC 4            REV 02   710-011398   CP6741            M120 FPC Type 3
  PIC 0          REV 16   750-007141   NB2855            10x 1GE(LAN), 1000 BASE

    Xcvr 0       REV 01   740-011782   P922A1F           SFP-SX
    Xcvr 1       REV 01   740-011782   P922A16           SFP-SX
    Xcvr 2       REV 01   740-011782   P922A0U           SFP-SX
    Xcvr 3       REV 01   740-011782   P9229UZ           SFP-SX
    Xcvr 4       REV 01   740-009029   P11JXWP           SFP-LX
    Xcvr 6       REV 01   740-011613   P9F1ALW           SFP-SX
FPC 5            REV 01   710-011388   CJ9088            M120 FPC Type 1
  PIC 0          *** Hardware Not Supported ***
  PIC 1          REV 05   750-012052   NB0410            1x CHOC3 IQ SONET, SMLR

  PIC 2          REV 01   750-013167   CM3824            4x CHDS3 IQ
  PIC 3          REV 01   750-010240   CB5366            1x G/E SFP, 1000 BASE
  Board B        REV 01   710-011390   CJ9103            M120 FPC Mezz Board
FEB 3            REV 04   710-011663   CP6673            M120 FEB
FEB 4            REV 04   710-011663   CJ9368            M120 FEB
FEB 5            REV 04   710-011663   CJ9386            M120 FEB
Fan Tray 0                                               Front Top Fan Tray
Fan Tray 1                                               Front Bottom Fan Tray
Fan Tray 2                                               Rear Top Fan Tray
Fan Tray 3                                               Rear Bottom Fan Tray
```

show chassis hardware detail (M120 Router)

```
user@host> show chassis hardware detail
Hardware inventory:
Item             Version  Part number  Serial number     Description
Chassis                                JN000054AC        M120
Midplane         REV 01   710-013667   RB4170            M120 Midplane
FPM Board        REV 02   710-011407   CJ9186            M120 FPM Board
FPM Display      REV 02   710-011405   CJ9173            M120 FPM Display
FPM CIP          REV 02   710-011410   CJ9221            M120 FPM CIP
PEM 0            Rev 05   740-011936   RM28320           AC Power Entry Module
PEM 1            Rev 05   740-011936   RM28321           AC Power Entry Module
Routing Engine 0 REV 03   740-014080   1000642883        RE-A-1000
  ad0     248 MB  SILICONSYSTEMS INC 256M 126CT505S0763SC00110 Compact Flash
  ad2   38154 MB  HTE541040G9SA00      MPBBT0X2HS2E3M    Hard Disk
CB 0             REV 03   710-011403   CM8346            M120 Control Board
CB 1             REV 06   710-011403   CP6728            M120 Control Board
FPC 1            REV 02   710-015908   CP6925            M120 CFPC 10GE
  PIC 0                   BUILTIN      BUILTIN           1x 10GE(LAN/WAN) XFP
    Xcvr 0       REV 01   740-014279   62E204N00007      XFP-10G-LR
FPC 3            REV 03   710-011393   CJ9234            M120 FPC Type 2
  PIC 0          REV 16   750-008155   NB5229            2x G/E IQ, 1000 BASE
    Xcvr 0       REV 01   740-011613   P9F15JB           SFP-SX
    Xcvr 1       REV 01   740-007326   P4Q0R9G           SFP-SX
  PIC 1          REV 09   750-007745   CG4360            4x OC-3 SONET, SMIR
  PIC 2          REV 16   750-008155   ND7787            2x G/E IQ, 1000 BASE
    Xcvr 0       REV 01   740-011613   P9F12AS           SFP-SX
    Xcvr 1       REV 01   740-011613   P9F1ALU           SFP-SX
  PIC 3          REV 07   750-011800   JW1284            8x 1GE(LAN), IQ2
    Xcvr 0       REV 01   740-011613   P9F1AM6           SFP-SX
    Xcvr 6       REV 01   740-011613   P9F16NN           SFP-SX
    Xcvr 7       REV 01   740-011782   P8C29Y7           SFP-SX
  Board B        REV 02   710-011395   CN3754            M120 FPC Mezz
FPC 4            REV 02   710-011398   CP6741            M120 FPC Type 3
  PIC 0          REV 16   750-007141   NB2855            10x 1GE(LAN), 1000 BASE

    Xcvr 0       REV 01   740-011782   P922A1F           SFP-SX
    Xcvr 1       REV 01   740-011782   P922A16           SFP-SX
    Xcvr 2       REV 01   740-011782   P922A0U           SFP-SX
    Xcvr 3       REV 01   740-011782   P9229UZ           SFP-SX
    Xcvr 4       REV 01   740-009029   P11JXWP           SFP-LX
    Xcvr 6       REV 01   740-011613   P9F1ALW           SFP-SX
FPC 5            REV 01   710-011388   CJ9088            M120 FPC Type 1
  PIC 0          *** Hardware Not Supported ***
  PIC 1          REV 05   750-012052   NB0410            1x CHOC3 IQ SONET, SMLR

  PIC 2          REV 01   750-013167   CM3824            4x CHDS3 IQ
  PIC 3          REV 01   750-010240   CB5366            1x G/E SFP, 1000 BASE
  Board B        REV 01   710-011390   CJ9103            M120 FPC Mezz Board
FEB 3            REV 04   710-011663   CP6673            M120 FEB
FEB 4            REV 04   710-011663   CJ9368            M120 FEB
FEB 5            REV 04   710-011663   CJ9386            M120 FEB
Fan Tray 0                                               Front Top Fan Tray
Fan Tray 1                                               Front Bottom Fan Tray
Fan Tray 2                                               Rear Top Fan Tray
Fan Tray 3                                               Rear Bottom Fan Tray
```

show chassis hardware models (M120 Router)

```
user@host> show chassis hardware models
```

```
Hardware inventory:
Item             Version  Part number  CLEI code         FRU model number
Midplane         REV 01   710-013667
FPM CIP          REV 02   710-011410                     CRAFT-M120-S
PEM 0            Rev 05   740-011936                     PWR-M120-AC-S
PEM 1            Rev 05   740-011936                     PWR-M120-AC-S
Routing Engine 0 REV 03   740-014080                     RE-A-1000-2048-S
CB 0             REV 03   710-011403                     CB-M120-S
CB 1             REV 06   710-011403                     CB-M120-S
FPC 1            REV 02   710-015908                     M120-cFPC-1XGE-XFP
FPC 3
  PIC 0          REV 16   750-008155                     PB-2GE-SFP-QPP
  PIC 1          REV 09   750-007745                     PC-4OC3-SON-SMIR
  PIC 2          REV 16   750-008155                     PB-2GE-SFP-QPP
  PIC 3          REV 07   750-011800                     PB-8GE-TYPE2-SFP-IQ2
FPC 4
  PIC 0          REV 16   750-007141                     PC-10GE-SFP
FPC 5
  PIC 1          REV 05   750-012052                     PB-1CHOC3-SMIR-QPP
  PIC 2          REV 01   750-013167                     PE-4CHDS3-QPP
  PIC 3          REV 01   750-010240                     PB-1GE-SFP
Fan Tray 0                                               FFANTRAY-M120-S
Fan Tray 1                                               FFANTRAY-M120-S
Fan Tray 2                                               RFANTRAY-M120-S
Fan Tray 3                                               RFANTRAY-M120-S
```

show chassis hardware (M160 Router)

```
user@host> show chassis hardware
Item             Version  Part number  Serial number     Description
Chassis                               101               M160
Midplane         REV 02   710-001245   S/N AB4107
FPM CMB          REV 01   710-001642   S/N AA2911
FPM Display      REV 01   710-001647   S/N AA2999
CIP              REV 02   710-001593   S/N AA9563
PEM 0            Rev 01   740-001243   S/N KJ35769       DC
PEM 1            Rev 01   740-001243   S/N KJ35765       DC
PCG 0            REV 01   710-001568   S/N AA9794
PCG 1            REV 01   710-001568   S/N AA9804
Host 1                                 da000004f8d57001  teknor
MCS 1            REV 03   710-001226   S/N AA9777
SFM 0 SPP        REV 04   710-001228   S/N AA2975
SFM 0 SPR        REV 02   710-001224   S/N AA9838        Internet Processor I
SFM 1 SPP        REV 04   710-001228   S/N AA2860
SFM 1 SPR        REV 01   710-001224   S/N AB0139        Internet Processor I
FPC 0            REV 03   710-001255   S/N AA9806        FPC Type 1
  CPU            REV 02   710-001217   S/N AA9590
  PIC 1          REV 05   750-000616   S/N AA1527        1x OC-12 ATM, MM
  PIC 2          REV 05   750-000616   S/N AA1535        1x OC-12 ATM, MM
  PIC 3          REV 01   750-000616   S/N AA1519        1x OC-12 ATM, MM
FPC 1            REV 02   710-001611   S/N AA9523        FPC Type 2
  CPU            REV 02   710-001217   S/N AA9571
  PIC 0          REV 03   750-001900   S/N AA9626        1x STM-16 SDH, SMIR
  PIC 1          REV 01   710-002381   S/N AD3633        2x G/E, 1000 BASE-SX
FPC 2                                                    FPC Type OC192
  CPU            REV 03   710-001217   S/N AB3329
  PIC 0          REV 01                                  1x OC-192 SM SR-2
Fan Tray 0                                               Rear Bottom Blower
Fan Tray 1                                               Rear Top Blower
Fan Tray 2                                               Front Top Blower
Fan Tray 3                                               Front Fan Tray
```

show chassis hardware models (M160 Router)

```
user@host> show chassis hardware models
 Hardware inventory:
Item             Version  Part number  CLEI code         FRU model number
Midplane         REV 03   710-009120                     CHAS-BP-M320-S
FPM Display      REV 02   710-009351                     CRAFT-M320-S
CIP              REV 03   710-005926                     CIP-M320-S
PEM 2            Rev X4   740-009148                     PWR-M-DC-S
PEM 3            Rev X4   740-009148                     PWR-M-DC-S
Routing Engine 0 REV 02   740-008883                     RE-1600-2048-S
Routing Engine 1 REV 02   740-008883                     RE-1600-2048-S
FPC 0            REV 02   710-010419                     M320-FPC1
  PIC 0          REV 01   750-001323                     P-TUNNEL
  PIC 1          REV 02   750-002987                     PE-1OC12-SON-SMIR
  PIC 2          REV 04   750-001894                     PB-1GE-SX
  PIC 3          REV 04   750-001896                     PB-1OC12-SON-SMIR
FPC 1            REV 02   710-010419                     M320-FPC1
  PIC 0          REV 04   750-001894                     PB-1GE-SX
  PIC 1          REV 04   750-001894                     PB-1GE-SX
  PIC 3          REV 03   750-001894                     PB-1GE-SX
FPC 2            REV 02   710-010419                     M320-FPC1
  PIC 0          REV 10   750-005634                     PB-1CHOC12SMIR-QPP
  PIC 1          REV 10   750-005634                     PB-1CHOC12SMIR-QPP
  PIC 2          REV 07   750-005634                     PB-1CHOC12SMIR-QPP
  PIC 3          REV 07   750-005634                     PB-1CHOC12SMIR-QPP
  PIC 1          REV 10   750-005634                     PB-1CHOC12SMIR-QPP
  PIC 2          REV 07   750-005634                     PB-1CHOC12SMIR-QPP
  PIC 3          REV 07   750-005634                     PB-1CHOC12SMIR-QPP
FPC 3
  PIC 0          REV 03   750-001895                     PB-1OC12-SON-MM
  PIC 1          REV 04   750-001894                     PB-1GE-SX
  PIC 3          REV 04   750-003141                     PB-1GE-SX-B
FPC 4            REV 02   710-010419                     M320-FPC1
FPC 5            REV 02   710-010419                     M320-FPC1
FPC 6            REV 02   710-010419                     M320-FPC1
FPC 7
  PIC 0          REV 15   750-001901                     PB-4OC12-SON-SMIR
  PIC 1          REV 06   750-001900                     PB-1OC48-SON-SMSR
  PIC 2          REV 07   750-001900                     PB-1OC48-SON-SMSR
  PIC 3          REV 05   750-003737                     PB-4GE-SX
SIB 0            REV 03   710-009184                     SIB-M-S
SIB 1            REV 03   710-009184                     SIB-M-S
SIB 2            REV 03   710-009184                     SIB-M-S
SIB 3            REV 03   710-009184                     SIB-M-S
Fan Tray 0                                               FFANTRAY-M320-S
Fan Tray 1                                               FFANTRAY-M320-S
Fan Tray 2                                               RFANTRAY-M320-S
```

show chassis hardware detail (M160 Router)

```
user@host> show chassis hardware detail
Hardware inventory:
Item             Version  Part number  Serial number     Description
Chassis                               101               M160
Midplane         REV 02   710-001245   S/N AB4107
FPM CMB          REV 01   710-001642   S/N AA2911
FPM Display      REV 01   710-001647   S/N AA2999
CIP              REV 02   710-001593   S/N AA9563
PEM 0            Rev 01   740-001243   S/N KJ35769       DC
```

```
PEM 1            Rev 01   740-001243   S/N KJ35765       DC
PCG 0            REV 01   710-001568   S/N AA9794
PCG 1            REV 01   710-001568   S/N AA9804
Host 1                                 da000004f8d57001  teknor
MCS 1            REV 03   710-001226   S/N AA9777
SFM 0 SPP        REV 04   710-001228   S/N AA2975
SFM 0 SPR        REV 02   710-001224   S/N AA9838        Internet Processor I
  SSRAM bank 0   REV 01   710-000077   S/N 306456        1 MB
  SSRAM bank 1   REV 01   710-000077   S/N 306474        1 MB
  SSRAM bank 2   REV 01   710-000077   S/N 306388        1 MB
  SSRAM bank 3   REV 01   710-000077   S/N 306392        1 MB
SFM 1 SPP        REV 04   710-001228   S/N AA2860
SFM 1 SPR        REV 01   710-001224   S/N AB0139        Internet Processor I
  SSRAM bank 0   REV 01   710-000077   S/N 302917        1 MB
  SSRAM bank 1   REV 01   710-000077   S/N 302662        1 MB
  SSRAM bank 2   REV 01   710-000077   S/N 302593        1 MB
  SSRAM bank 3   REV 01   710-000077   S/N 100160        1 MB
FPC 0            REV 03   710-001255   S/N AA9806        FPC Type 1
  CPU            REV 02   710-001217   S/N AA9590
  SSRAM          REV 01   710-000077   S/N 302836        1 MB
  SDRAM 0        REV 01   710-001196   S00141            32 MB
  SDRAM 1        REV 01   710-001196   S0010;            32 MB
  SSRAM          REV 01   710-000077   S/N 302633        1 MB
  SDRAM 0        REV 01   710-001196   S00143            32 MB
  SDRAM 1        REV 01   710-001196   S00115            32 MB
  SSRAM          REV 01   710-000077   S/N 302952        1 MB
  SDRAM 0        REV 01   710-001196   S00135            32 MB
  SDRAM 1        REV 01   710-001196   S001=3            32 MB
  SSRAM          REV 01   710-000077   S/N 302892        1 MB
  SDRAM 0        REV 01   710-001196   S000?6            32 MB
  SDRAM 1        REV 01   710-001196   S001=5            32 MB
  PIC 1          REV 05   750-000616   S/N AA1527        1x OC-12 ATM, MM
  PIC 2          REV 05   750-000616   S/N AA1535        1x OC-12 ATM, MM
  PIC 3          REV 01   750-000616   S/N AA1519        1x OC-12 ATM, MM
FPC 1            REV 02   710-001611   S/N AA9523        FPC Type 2
  CPU            REV 02   710-001217   S/N AA9571
  SSRAM          REV 01   710-000077   S/N 306340        1 MB
  SDRAM 0        REV 01   710-001196   S00012            32 MB
  SDRAM 1        REV 01   710-001196   S0001?            32 MB
  SSRAM          REV 01   710-000077   S/N 306454        1 MB
  SDRAM 0        REV 01   710-001196   S00028            32 MB
  SDRAM 1        REV 01   710-001196   S0002?            32 MB
  SSRAM          REV 01   710-000077   S/N 306492        1 MB
  SDRAM 0        REV 01   710-001196   S00015            32 MB
  SDRAM 1        REV 01   710-001196   S00031            32 MB
  SSRAM          REV 01   710-000077   S/N 306363        1 MB
  SDRAM 0        REV 01   710-001196   S00013            32 MB
  SDRAM 1        REV 01   710-001196   S00032            32 MB
  PIC 0          REV 03   750-001900   S/N AA9626        1x STM-16 SDH, SMIR
  PIC 1          REV 01   710-002381   S/N AD3633        2x G/E, 1000 BASE-SX
FPC 2                                                    FPC Type OC192
... SSRAM          REV 01   710-000077   S/N 306466        1 MB
```

show chassis hardware (M320 Router)

```
user@host> show chassis hardware
Hardware inventory:
Item             Version  Part number  Serial number     Description
Chassis                                67245             M320
Midplane         REV 05   710-009120   RB1202            M320 Midplane
FPM GBUS         REV 04   710-005928   HZ5697            M320 Board
```

```
FPM Display      REV 05   710-009351   HR1464           M320 FPM Display
CIP              REV 04   710-005926   HT8672           M320 CIP
PEM 0            Rev 05   740-009148   QK34208          DC Power Entry Module
PEM 1            Rev 05   740-009148   QK34262          DC Power Entry Module
PEM 2            Rev 05   740-009148   QF10449          DC Power Entry Module
PEM 3            Rev 05   740-009148   QJ18257          DC Power Entry Module
Routing Engine 0 REV 06   740-008883   P11123901185     RE-4.0
CB 0             REV 07   710-009115   JB2382           M320 Control Board
FPC 0            REV 02   710-005017   CD9926           M320 FPC Type 2
  CPU            REV 01   710-011659   CJ6940           M320 PCA SCPU
  PIC 0          REV 07   750-001900   AT1594           1x OC-48 SONET, SMSR
  PIC 1          REV 03   750-001850   HS2746           1x Tunnel
  PIC 2          REV 05   750-010618   JE7117           4x G/E SFP, 1000 BASE
  PIC 3          REV 06   750-001900   HE6083           1x OC-48 SONET, SMSR
FPC 2            REV 02   710-005017   CH0319           M320 FPC Type 1
  CPU            REV 01   710-011659   CJ6942           M320 PCA SCPU
  PIC 0          REV 05   750-003034   BD8705           4x OC-3 SONET, SMIR
FPC 5            REV 02   710-005017   CD9938           M320 FPC Type 2
  CPU
FPC 7            REV 02   710-005017   CD9934           M320 FPC Type 2
  CPU
SIB 0            REV 09   710-009184   JA6540           M320 SIB
SIB 1            REV 09   710-009184   HV9511           M320 SIB
SIB 2            REV 09   710-009184   HW2057           M320 SIB
SIB 3            REV 09   710-009184   JA6687           M320 SIB
Fan Tray 0                                              Front Top Fan Tray
Fan Tray 1                                              Front Bottom Fan Tray
Fan Tray 2                                              Rear Fan Tray
```

show chassis hardware models (M320 Router)

```
user@host> show chassis hardware models
Hardware inventory:
Item             Version  Part number  CLEI code        FRU model number
Midplane         REV 03   710-009120                    CHAS-BP-M320-S
FPM Display      REV 02   710-009351                    CRAFT-M320-S
CIP              REV 03   710-005926                    CIP-M320-S
PEM 2            Rev X4   740-009148                    PWR-M-DC-S
PEM 3            Rev X4   740-009148                    PWR-M-DC-S
Routing Engine 0 REV 02   740-008883                    RE-1600-2048-S
Routing Engine 1 REV 02   740-008883                    RE-1600-2048-S
FPC 0            REV 02   710-010419                    M320-FPC1
  PIC 0          REV 01   750-001323                    P-TUNNEL
  PIC 1          REV 02   750-002987                    PE-1OC12-SON-SMIR
  PIC 2          REV 04   750-001894                    PB-1GE-SX
  PIC 3          REV 04   750-001896                    PB-1OC12-SON-SMIR
FPC 1            REV 02   710-010419                    M320-FPC1
  PIC 0          REV 04   750-001894                    PB-1GE-SX
  PIC 1          REV 04   750-001894                    PB-1GE-SX
  PIC 3          REV 03   750-001894                    PB-1GE-SX
FPC 2            REV 02   710-010419                    M320-FPC1
  PIC 0          REV 10   750-005634                    PB-1CHOC12SMIR-QPP
  PIC 1          REV 10   750-005634                    PB-1CHOC12SMIR-QPP
  PIC 2          REV 07   750-005634                    PB-1CHOC12SMIR-QPP
  PIC 3          REV 07   750-005634                    PB-1CHOC12SMIR-QPP
  PIC 1          REV 10   750-005634                    PB-1CHOC12SMIR-QPP
  PIC 2          REV 07   750-005634                    PB-1CHOC12SMIR-QPP
  PIC 3          REV 07   750-005634                    PB-1CHOC12SMIR-QPP
FPC 3
  PIC 0          REV 03   750-001895                    PB-1OC12-SON-MM
  PIC 1          REV 04   750-001894                    PB-1GE-SX
```

```
  PIC 3          REV 04   750-003141                    PB-1GE-SX-B
FPC 4            REV 02   710-010419                    M320-FPC1
FPC 5            REV 02   710-010419                    M320-FPC1
FPC 6            REV 02   710-010419                    M320-FPC1
FPC 7
  PIC 0          REV 15   750-001901                    PB-4OC12-SON-SMIR
  PIC 1          REV 06   750-001900                    PB-1OC48-SON-SMSR
  PIC 2          REV 07   750-001900                    PB-1OC48-SON-SMSR
  PIC 3          REV 05   750-003737                    PB-4GE-SX
SIB 0            REV 03   710-009184                    SIB-M-S
SIB 1            REV 03   710-009184                    SIB-M-S
SIB 2            REV 03   710-009184                    SIB-M-S
SIB 3            REV 03   710-009184                    SIB-M-S
Fan Tray 0                                              FFANTRAY-M320-S
Fan Tray 1                                              FFANTRAY-M320-S
Fan Tray 2                                              RFANTRAY-M320-S
```

show chassis hardware (MX5 Router)

```
user@host> show chassis hardware
Hardware inventory:
Item             Version  Part number  Serial number     Description
Chassis                                E1368             MX5-T
Midplane         REV 01   711-038215   YF5288            MX5-T
PEM 0            Rev 04   740-028288   VA01215           AC Power Entry Module
PEM 1            Rev 04   740-028288   VA01218           AC Power Entry Module
Routing Engine            BUILTIN      BUILTIN           Routing Engine
TFEB 0                    BUILTIN      BUILTIN           Forwarding Engine
Processor
  QXM 0          REV 05   711-028408   ZA9136            MPC QXM
FPC 0                     BUILTIN      BUILTIN           MPC BUILTIN
  MIC 0                   BUILTIN      BUILTIN           4x 10GE XFP
    PIC 0                 BUILTIN      BUILTIN           4x 10GE XFP
FPC 1                     BUILTIN      BUILTIN           MPC BUILTIN
  MIC 0          REV 24   750-028392   YX9820            3D 20x 1GE(LAN) SFP
    PIC 0                 BUILTIN      BUILTIN           10x 1GE(LAN) SFP
      Xcvr 0     REV 01   740-031851   AM1045SUAQ3       SFP-SX
      Xcvr 1     REV 01   740-031851   AM1045SUAPA       SFP-SX
      Xcvr 2     REV 01   740-031851   AM1045SUAN7       SFP-SX
      Xcvr 3     REV 01   740-031851   AM1045SU91Q       SFP-SX
      Xcvr 4     REV 01   740-031851   AM1045SUDDR       SFP-SX
      Xcvr 9     REV 01   740-011613   AM0848SB6A1       SFP-SX
    PIC 1                 BUILTIN      BUILTIN           10x 1GE(LAN) SFP
      Xcvr 0     REV 01   740-031851   AM1045SUAN0       SFP-SX
      Xcvr 1     REV 01   740-011613   AS0812S0719       SFP-SX
      Xcvr 2     REV 01   740-011613   AM0821SA121       SFP-SX
      Xcvr 3     REV 01   740-011613   PF21K21           SFP-SX
      Xcvr 4     REV 01   740-011613   AM0848SB69Z       SFP-SX
      Xcvr 5     REV 01   740-011782   P9P0XV3           SFP-SX
      Xcvr 6     REV 01   740-011613   AM0812S8WJN       SFP-SX
      Xcvr 7     REV 01   740-011613   PAM3G9Q           SFP-SX
      Xcvr 8     REV 01   740-011613   AM0848SB4A6       SFP-SX
      Xcvr 9     REV 01   740-011782   P9M0U37           SFP-SX
  MIC 1          REV 20   750-028380   ZG2657            3D 2x 10GE XFP
    PIC 2                 BUILTIN      BUILTIN           1x 10GE XFP
    PIC 3                 BUILTIN      BUILTIN           1x 10GE XFP
Fan Tray                                                 Fan Tray
```

show chassis hardware (MX10 Router)

```
user@host> show chassis hardware
Hardware inventory:
Item             Version  Part number  Serial number     Description
Chassis                                E1372             MX10-T
Midplane         REV 01   711-038211   YF5285            MX10-T
PEM 0            Rev 04   740-028288   VB01678           AC Power Entry Module
Routing Engine            BUILTIN      BUILTIN           Routing Engine
TFEB 0                    BUILTIN      BUILTIN           Forwarding Engine
Processor
  QXM 0          REV 05   711-028408   ZA9053            MPC QXM
FPC 0                     BUILTIN      BUILTIN           MPC BUILTIN
  MIC 0                   BUILTIN      BUILTIN           4x 10GE XFP
    PIC 0                 BUILTIN      BUILTIN           4x 10GE XFP
FPC 1                     BUILTIN      BUILTIN           MPC BUILTIN
  MIC 0          REV 24   750-028392   YX9436            3D 20x 1GE(LAN) SFP
    PIC 0                 BUILTIN      BUILTIN           10x 1GE(LAN) SFP
      Xcvr 0     REV 01   740-031851   AM1107SUFQW       SFP-SX
    PIC 1                 BUILTIN      BUILTIN           10x 1GE(LAN) SFP
Fan Tray                                                 Fan Tray
```

show chassis hardware (MX40 Router)

```
user@host> show chassis hardware
Hardware inventory:
Item             Version  Part number  Serial number     Description
Chassis                                E1367             MX40-T
Midplane         REV 01   711-038211   YF5284            MX40-T
PEM 0            Rev 04   740-028288   VB01680           AC Power Entry Module
PEM 1            Rev 04   740-028288   VB01700           AC Power Entry Module
Routing Engine            BUILTIN      BUILTIN           Routing Engine
TFEB 0                    BUILTIN      BUILTIN           Forwarding Engine
Processor
  QXM 0          REV 05   711-028408   ZA9048            MPC QXM
FPC 0                     BUILTIN      BUILTIN           MPC BUILTIN
  MIC 0                   BUILTIN      BUILTIN           4x 10GE XFP
    PIC 0                 BUILTIN      BUILTIN           4x 10GE XFP
      Xcvr 0     REV 01   740-014279   M7067UPP          XFP-10G-LR
      Xcvr 1              NON-JNPR     K9J02UN           XFP-10G-LR
FPC 1                     BUILTIN      BUILTIN           MPC BUILTIN
  MIC 0          REV 24   750-028392   YX3504            3D 20x 1GE(LAN) SFP
    PIC 0                 BUILTIN      BUILTIN           10x 1GE(LAN) SFP
      Xcvr 0     REV 01   740-011613   AM0812S8WTE       SFP-SX
      Xcvr 1     REV 01   740-011613   PFA6KV2           SFP-SX
      Xcvr 2     REV 01   740-031851   AM1045SUDDM       SFP-SX
      Xcvr 3     REV 01   740-011613   PD63C7M           SFP-SX
      Xcvr 4     REV 01   740-011613   PD63DJY           SFP-SX
      Xcvr 5     REV 02   740-011613   AA0950STLL9       SFP-SX
      Xcvr 6     REV 01   740-011782   PAR1YHC           SFP-SX
      Xcvr 7     REV 01   740-011782   P9P0XXL           SFP-SX
      Xcvr 8     REV 01   740-011613   PD63D95           SFP-SX
      Xcvr 9     REV 01   740-031851   AM1045SU9B8       SFP-SX
    PIC 1                 BUILTIN      BUILTIN           10x 1GE(LAN) SFP
      Xcvr 0     REV 01   740-011613   PF21L3Z           SFP-SX
      Xcvr 1     REV 01   740-031851   AM1045SU7M9       SFP-SX
      Xcvr 2     REV 01   740-031851   AM1045SUAPT       SFP-SX
      Xcvr 3     REV 01   740-011613   PFF2BZH           SFP-SX
      Xcvr 4     REV 01   740-031851   AM1045SUDDN       SFP-SX
      Xcvr 5     REV 01   740-031851   AM1039S00ZR       SFP-SX
```

```
      Xcvr 6     REV 01   740-031851   AM1045SUD6Y       SFP-SX
      Xcvr 8     REV 01   740-011613   PFM1QBS           SFP-SX
      Xcvr 9     REV 01   740-011613   PFF2E25           SFP-SX
  MIC 1          REV 01   750-021130   KG4391            3D 2x 10GE XFP
    PIC 2                 BUILTIN      BUILTIN           1x 10GE XFP
      Xcvr 0     REV 01   740-011571   C645XJ04G         XFP-10G-SR
    PIC 3                 BUILTIN      BUILTIN           1x 10GE XFP
      Xcvr 0              NON-JNPR     CA49BK0AE         XFP-10G-SR
Fan Tray                                                 Fan Tray
```

show chassis hardware (Fixed MX80 Router)

```
user@host> show chassis hardware
Hardware inventory:
Item             Version  Part number  Serial number     Description
Chassis                                                  MX80-48T
Midplane         REV 01   711-031603   KF9250            MX80-48T
Routing Engine            BUILTIN      BUILTIN           Routing Engine
FEB 0                     BUILTIN      BUILTIN           Forwarding Engine Board
FPC 0                     BUILTIN      BUILTIN           MPC BUILTIN
  MIC 0                   BUILTIN      BUILTIN           4x 10GE XFP
    PIC 0                 BUILTIN      BUILTIN           4x 10GE XFP
      Xcvr 0              NON-JNPR     M6439D41          XFP-10G-LR
      Xcvr 1     REV 01   740-014279   6XE931N00202      XFP-10G-LR
      Xcvr 2     REV 01   740-014289   C715XU05F         XFP-10G-SR
      Xcvr 3     REV 01   740-014289   C650XU0EP         XFP-10G-SR
FPC 1                     BUILTIN      BUILTIN           MPC BUILTIN
  MIC 0          REV 01   711-029399   JR6981            12x 1GE(LAN) RJ45
    PIC 0                 BUILTIN      BUILTIN           12x 1GE(LAN) RJ45
    PIC 1                 BUILTIN      BUILTIN           12x 1GE(LAN) RJ45
  MIC 1          REV 01   BUILTIN      BUILTIN           12x 1GE(LAN) RJ45
    PIC 2                 BUILTIN      BUILTIN           12x 1GE(LAN) RJ45
    PIC 3                 BUILTIN      BUILTIN           12x 1GE(LAN) RJ45
Fan Tray                                                 Fan Tray
```

show chassis hardware (Modular MX80 Router)

```
user@host> show chassis hardware

Hardware inventory:
Item             Version  Part number  Serial number     Description
Chassis                                                  MX80
Midplane         REV 02   711-031594   JR7084            MX80
PEM 0            Rev 01   740-028288   000018            AC Power Entry Module
Routing Engine            BUILTIN      BUILTIN           Routing Engine
FEB 0                     BUILTIN      BUILTIN           Forwarding Engine Board

  QXM 0          REV 05   711-028408   JR7041            MPC QXM
FPC 0                     BUILTIN      BUILTIN           MPC BUILTIN
  MIC 0                   BUILTIN      BUILTIN           4x 10GE XFP
    PIC 0                 BUILTIN      BUILTIN           4x 10GE XFP
FPC 1                     BUILTIN      BUILTIN           MPC BUILTIN
  MIC 0          REV 02   750-028380   JR6598            3D 2x 10GE XFP
    PIC 0                 BUILTIN      BUILTIN           1x 10GE XFP
      Xcvr 0     REV 01   740-014289   T07M86365         XFP-10G-SR
    PIC 1                 BUILTIN      BUILTIN           1x 10GE XFP
      Xcvr 0     REV 01   740-014289   T07M71094         XFP-10G-SR
  MIC 1          REV 02   750-028380   JG8548            3D 2x 10GE XFP
    PIC 2                 BUILTIN      BUILTIN           1x 10GE XFP
      Xcvr 0     REV 02   740-014289   T08L86302         XFP-10G-SR
```

```
    PIC 3                 BUILTIN      BUILTIN           1x 10GE XFP
      Xcvr 0     REV 02   740-014289   C810XU0BA         XFP-10G-SR
Fan Tray                                                 Fan Tray
```

show chassis hardware (MX150)

```
user@host> show chassis hardware
Hardware inventory:
Item             Version  Part number  Serial number     Description
Chassis                               DD2316AF0078      MX150
Midplane         REV 04   650-066113   DD2316AF0078      MX150
Power Supply 0
Routing Engine 0                                         RE-VMX
CB 0                                                     VMX SCB
CB 1                                                     VMX SCB
FPC 0                                                    Virtual FPC
  CPU            Rev. 1.0 RIOT         BUILTIN
  MIC 0                                                  Virtual
    PIC 0                BUILTIN      BUILTIN           Virtual
      Xcvr 10    REV 02   740-013111   A331846           SFP-T
      Xcvr 11    REV 02   740-013111   C248517           SFP-T
Fan Tray 0                                               fan-ctrl-0 0, Front to
Back Airflow - AFO
Fan Tray 1                                               fan-ctrl-0 1, Front to
Back Airflow - AFO
```

show chassis hardware models (MX150)

```
user@host> show chassis hardware models
Hardware inventory:
Item             Version  Part number  Serial number     FRU model number
Midplane         REV 04   650-066113   DD2316AF0163      MX150
Fan Tray 0                                               Assy,Sub,Fan
Tray,AFO,Opus-AFO
Fan Tray 1                                               Assy,Sub,Fan
Tray,AFO,Opus-AFO
```

show chassis hardware (MX104 Router)

```
user@host> show chassis hardware
Hardware inventory:
Item             Version  Part number  Serial number     Description
Chassis                               G3503             MX104
Midplane         REV 28   750-044219   CAAX5741          MX104
PEM 0            REV 03   740-045933   1H072500016       AC Power Entry Module
PEM 1            REV 03   740-045932   1H073050017       DC Power Entry Module
Routing Engine 0 REV 20   750-044228   CAAY7935          RE-MX-104
Routing Engine 1 REV 13   750-044228   CAAM6380          RE-MX-104
AFEB 0                    BUILTIN      BUILTIN           Forwarding Engine
Processor
FPC 0                     BUILTIN      BUILTIN           MPC BUILTIN
FPC 1                     BUILTIN      BUILTIN           MPC BUILTIN
  MIC 0          REV 15   750-036132   CAAF7948          2xOC12/8xOC3 CC-CE
    PIC 0                 BUILTIN      BUILTIN           2xOC12/8xOC3 CC-CE
      Xcvr 0     REV 01   740-011615   PCQ0U2J           SFP-IR
      Xcvr 1     REV 01   740-016068   PJL7A6G           SFP-SR
      Xcvr 2     REV 01   740-016068   PJL7A5J           SFP-SR
      Xcvr 3     REV 01   740-016065   PJN5HPZ           SFP-SR
      Xcvr 4     REV 01   740-029122   PKB38TL           SFP-LR
      Xcvr 5     REV 01   740-011787   P6A107G           SFP-LR
```

```
      Xcvr 6     REV 01   740-029122   PKB38TR           SFP-LR
      Xcvr 7     REV 01   740-011787   PBK0NK3           SFP-LR
  MIC 1
FPC 2                     BUILTIN      BUILTIN           MPC BUILTIN
  MIC 0                   BUILTIN      BUILTIN           4x 10GE(LAN) SFP+
    PIC 0                 BUILTIN      BUILTIN           4x 10GE(LAN) SFP+
      Xcvr 0     REV 01   740-031980   B10F00465         SFP+-10G-SR
      Xcvr 1     REV 01   740-031980   B10F00461         SFP+-10G-SR
      Xcvr 2     REV 01   740-031980   B10G01545         SFP+-10G-SR
      Xcvr 3     REV 01   740-031980   B10G01385         SFP+-10G-SR
Fan Tray 0       REV 02   711-049570   CAAX6538          Fan Tray
```

show chassis hardware detail (MX104 Router)

```
user@host> show chassis hardware detail
Hardware inventory:
Item             Version  Part number  Serial number     Description
Chassis                                G3503             MX104
Midplane         REV 28   750-044219   CAAX5741          MX104
PEM 0            REV 03   740-045933   1H072500016       AC Power Entry Module
PEM 1            REV 03   740-045932   1H073050017       DC Power Entry Module
Routing Engine 0 REV 20   750-044228   CAAY7935          RE-MX-104
  da0    7836 MB  ATP IG eUSB SSD                        Nand Flash 0
  usb0 (addr 1)  EHCI root hub 0       Freescale         uhub0
  usb0 (addr 2)  USB2513Bi  9491       SMSC              uhub1
  usb0 (addr 3)  ATP IG eUSB SSD 44801 ATP Electronics   umass0
Routing Engine 1 REV 13   750-044228   CAAM6380          RE-MX-104
  da0    7836 MB  ATP IG eUSB SSD                        Nand Flash 0
AFEB 0                    BUILTIN      BUILTIN           Forwarding Engine
Processor
FPC 0                     BUILTIN      BUILTIN           MPC BUILTIN
FPC 1                     BUILTIN      BUILTIN           MPC BUILTIN
  MIC 0          REV 15   750-036132   CAAF7948          2xOC12/8xOC3 CC-CE
    PIC 0                 BUILTIN      BUILTIN           2xOC12/8xOC3 CC-CE
      Xcvr 0     REV 01   740-011615   PCQ0U2J           SFP-IR
      Xcvr 1     REV 01   740-016068   PJL7A6G           SFP-SR
      Xcvr 2     REV 01   740-016068   PJL7A5J           SFP-SR
      Xcvr 3     REV 01   740-016065   PJN5HPZ           SFP-SR
      Xcvr 4     REV 01   740-029122   PKB38TL           SFP-LR
      Xcvr 5     REV 01   740-011787   P6A107G           SFP-LR
      Xcvr 6     REV 01   740-029122   PKB38TR           SFP-LR
      Xcvr 7     REV 01   740-011787   PBK0NK3           SFP-LR
  MIC 1
FPC 2                     BUILTIN      BUILTIN           MPC BUILTIN
  MIC 0                   BUILTIN      BUILTIN           4x 10GE(LAN) SFP+
    PIC 0                 BUILTIN      BUILTIN           4x 10GE(LAN) SFP+
      Xcvr 0     REV 01   740-031980   B10F00465         SFP+-10G-SR
      Xcvr 1     REV 01   740-031980   B10F00461         SFP+-10G-SR
      Xcvr 2     REV 01   740-031980   B10G01545         SFP+-10G-SR
      Xcvr 3     REV 01   740-031980   B10G01385         SFP+-10G-SR
Fan Tray 0       REV 02   711-049570   CAAX6538          Fan Tray
```

show chassis hardware detail (MX480 Packet Transport Router with details of virtual disk size)

```
user@host> show chassis hardware detail
Hardware inventory:
Item             Version  Part number  Serial number     Description
Chassis                                JN122FFD9AFB      MX480
Midplane         REV 05   710-017414   ACRB8882          MX480 Midplane
FPM Board        REV 02   710-017254   CADF7623          Front Panel Display
```

```
PEM 0            Rev 07   740-017343   QCS1128A0TY       DC Power Entry Module
PEM 1            Rev 07   740-017343   QCS1128A0JM       DC Power Entry Module
Routing Engine 0 REV 07   750-054758   CADG2028          RE-S-2X00x6
  vtbd0 15361 MB                                         Virtio Block Disk
  vtbd1 15360 MB                                         Virtio Block Disk
  ada0    511 MB  QEMU HARDDISK        QM00002           Emulated IDE Disk
  usb0 (addr 1)  UHCI root HUB 0       Intel             uhub0
Routing Engine 1 REV 00   750-054758                     RE-S-2X00x6
  vtbd0 15361 MB                                         Virtio Block Disk
  vtbd1 15360 MB                                         Virtio Block Disk
  ada0    511 MB  QEMU HARDDISK        QM00002           Emulated IDE Disk
  usb0 (addr 1)  UHCI root HUB 0       Intel             uhub0
CB 0             REV 01   750-055976   CACS1837          Enhanced MX SCB 2
CB 1             REV 01   750-055976   CADD9894          Enhanced MX SCB 2
  Xcvr 1         REV 01   740-031980   AP41KCL           SFP+-10G-SR
FPC 0            REV 09   750-049040   CACX1759          LOAD MPC Type 2
  CPU            REV 10   711-035209   CACP9324          HMPC PMB 2G
FPC 4            REV 28   750-037355   CACY8384          MPC4E 3D 2CGE+8XGE
  CPU            REV 10   711-035209   CACX0428          HMPC PMB 2G
Fan Tray                                                 Enhanced Left Fan Tray
```

show chassis hardware extensive (MX104 Router)

```
user@host> show chassis hardware extensive
Hardware inventory:
Item             Version  Part number  Serial number     Description
Chassis                                G3503             MX104
 Jedec Code:   0x7fb0            EEPROM Version:    0x02
                                 S/N:               G3503
 Assembly ID:  0x0560            Assembly Version:  00.00
 Date:         00-00-0000        Assembly Flags:    0x00
 ID: MX104
 Board Information Record:
  Address 0x00: 00 00 00 00 00 00 00 00 00 00 00 00 00 00 00 00
 I2C Hex Data:
  Address 0x00: 7f b0 02 ff 05 60 00 00 00 00 00 00 00 00 00 00
  Address 0x10: 00 00 00 00 00 00 00 00 00 00 00 00 00 00 00 00
  Address 0x20: 47 33 35 30 33 00 00 00 00 00 00 00 00 00 00 00
  Address 0x30: 00 00 00 00 00 00 00 00 00 00 00 00 00 00 00 00
  Address 0x40: 00 00 00 00 00 00 00 00 00 00 00 00 00 00 00 00
  Address 0x50: 00 00 00 00 00 00 00 00 00 00 00 00 00 00 00 00
  Address 0x60: 00 00 00 00 00 00 00 00 00 00 00 00 00 00 00 00
  Address 0x70: 00 00 00 00 00 00 00 00 00 00 00 00 00 00 00 00
Midplane         REV 28   750-044219   CAAX5741          MX104
 Jedec Code:   0x7fb0            EEPROM Version:    0x02
 P/N:          750-044219        S/N:               CAAX5741
 Assembly ID:  0x0560            Assembly Version:  01.28
 Date:         03-27-2013        Assembly Flags:    0x00
 Version:      REV 28            CLEI Code:         PROTOXCLEI
 ID: MX104                       FRU Model Number:  PROTO-ASSEMBLY
 Board Information Record:
  Address 0x00: ad 01 08 00 b0 a8 6e a7 f8 00 ff ff ff ff ff ff
 I2C Hex Data:
  Address 0x00: 7f b0 02 ff 05 60 01 1c 52 45 56 20 32 38 00 00
  Address 0x10: 00 00 00 00 37 35 30 2d 30 34 34 32 31 39 00 00
  Address 0x20: 53 2f 4e 20 43 41 41 58 35 37 34 31 00 1b 03 07
  Address 0x30: dd ff ff ff ad 01 08 00 b0 a8 6e a7 f8 00 ff ff
  Address 0x40: ff ff ff ff 01 50 52 4f 54 4f 58 43 4c 45 49 50
  Address 0x50: 52 4f 54 4f 2d 41 53 53 45 4d 42 4c 59 00 00 00
  Address 0x60: 00 00 00 00 00 00 41 30 30 ff ff ff ff ff ff ff
  Address 0x70: ff ff ff c2 47 33 35 30 33 00 00 00 00 00 00 00
```

```
PEM 0            REV 03   740-045933   1H072500016       AC Power Entry Module
 Jedec Code:   0x7fb0            EEPROM Version:    0x02
 P/N:          740-045933        S/N:               1H072500016
 Assembly ID:  0x0475            Assembly Version:  00.03
 Date:         12-14-2012        Assembly Flags:    0x00
 Version:      REV 03            CLEI Code:         IPUPAJ9KAA
 ID: AC Power Entry Module       FRU Model Number:  PWR-AMX1100-AC-S
 Board Information Record:
  Address 0x00: ff ff ff ff ff ff ff ff ff ff ff ff 02 02 00 ff
 I2C Hex Data:
  Address 0x00: 7f b0 02 ff 04 75 00 03 52 45 56 20 30 33 00 00
  Address 0x10: 00 00 00 00 37 34 30 2d 30 34 35 39 33 33 00 00
  Address 0x20: 31 48 30 37 32 35 30 30 30 31 36 00 00 0e 0c 07
  Address 0x30: dc 30 43 ff ff ff ff ff ff ff ff ff ff ff ff ff
  Address 0x40: 02 02 00 ff 01 49 50 55 50 41 4a 39 4b 41 41 50
  Address 0x50: 57 52 2d 41 4d 58 31 31 30 30 2d 41 43 2d 53 00
  Address 0x60: 00 00 00 00 00 00 41 30 30 ff ff ff ff ff ff ff
  Address 0x70: ff ff ff 70 ff ff ff ff ff ff ff ff ff ff ff ff
PEM 1            REV 03   740-045932   1H073050017       DC Power Entry Module
Jedec Code:   0x7fb0            EEPROM Version:    0x02
 P/N:          740-045932        S/N:               1H073050017
 Assembly ID:  0x0476            Assembly Version:  00.03
 Date:         01-30-2013        Assembly Flags:    0x00
 Version:      REV 03            CLEI Code:         IPUPAJ8KAA
 ID: DC Power Entry Module       FRU Model Number:  PWR-AMX1100-DC-S
 Board Information Record:
  Address 0x00: ff ff ff ff ff ff ff ff ff ff ff ff 02 02 00 ff
 I2C Hex Data:
  Address 0x00: 7f b0 02 ff 04 76 00 03 52 45 56 20 30 33 00 00
  Address 0x10: 00 00 00 00 37 34 30 2d 30 34 35 39 33 32 00 00
  Address 0x20: 31 48 30 37 33 30 35 30 30 31 37 00 00 1e 01 07
  Address 0x30: dd 30 44 ff ff ff ff ff ff ff ff ff ff ff ff ff
  Address 0x40: 02 02 00 ff 01 49 50 55 50 41 4a 38 4b 41 41 50
  Address 0x50: 57 52 2d 41 4d 58 31 31 30 30 2d 44 43 2d 53 00
  Address 0x60: 00 00 00 00 00 00 41 30 30 ff ff ff ff ff ff ff
  Address 0x70: ff ff ff 72 ff ff ff ff ff ff ff ff ff ff ff ff
Routing Engine 0 REV 20   750-044228   CAAY7935          RE-MX-104
 Jedec Code:   0x7fb0            EEPROM Version:    0x02
 P/N:          750-044228        S/N:               CAAY7935
 Assembly ID:  0x0b81            Assembly Version:  01.20
 Date:         03-18-2013        Assembly Flags:    0x00
 Version:      REV 20            CLEI Code:         PROTOXCLEI
 ID: RE-MX-104                   FRU Model Number:  PROTO-ASSEMBLY
 Board Information Record:
  Address 0x00: ad 01 00 08 b0 a8 6e a6 fc 10 ff ff ff ff ff ff
 I2C Hex Data:
  Address 0x00: 7f b0 02 fe 0b 81 01 14 52 45 56 20 32 30 00 00
  Address 0x10: 00 00 00 00 37 35 30 2d 30 34 34 32 32 38 00 00
  Address 0x20: 53 2f 4e 20 43 41 41 59 37 39 33 35 00 12 03 07
  Address 0x30: dd ff ff ff ad 01 00 08 b0 a8 6e a6 fc 10 ff ff
  Address 0x40: ff ff ff ff 01 50 52 4f 54 4f 58 43 4c 45 49 50
  Address 0x50: 52 4f 54 4f 2d 41 53 53 45 4d 42 4c 59 00 00 00
  Address 0x60: 00 00 00 00 00 00 41 30 30 ff ff ff ff ff ff ff
  Address 0x70: ff ff ff c2 ff ff ff ff ff ff ff ff ff ff ff ff
  da0    7836 MB  ATP IG eUSB SSD                        Nand Flash 0
  usb0 (addr 1)  EHCI root hub 0       Freescale         uhub0
  usb0 (addr 2)  USB2513Bi  9491       SMSC              uhub1
  usb0 (addr 3)  ATP IG eUSB SSD 44801 ATP Electronics   umass0
Routing Engine 1 REV 13   750-044228   CAAM6380          RE-MX-104
 Jedec Code:   0x7fb0            EEPROM Version:    0x02
 P/N:          750-044228        S/N:               CAAM6380
```

```
 Assembly ID:  0x0b81            Assembly Version:  01.13
 Date:         09-17-2012        Assembly Flags:    0x00
 Version:      REV 13            CLEI Code:         PROTOXCLEI
 ID: RE-MX-104                   FRU Model Number:  PROTO-ASSEMBLY
 Board Information Record:
  Address 0x00: ad 01 00 08 64 87 88 27 08 18 ff ff ff ff ff ff
 I2C Hex Data:
  Address 0x00: 7f b0 02 fe 0b 81 01 0d 52 45 56 20 31 33 00 00
  Address 0x10: 00 00 00 00 37 35 30 2d 30 34 34 32 32 38 00 00
  Address 0x20: 53 2f 4e 20 43 41 41 4d 36 33 38 30 00 11 09 07
  Address 0x30: dc ff ff ff ad 01 00 08 64 87 88 27 08 18 ff ff
  Address 0x40: ff ff ff ff 01 50 52 4f 54 4f 58 43 4c 45 49 50
  Address 0x50: 52 4f 54 4f 2d 41 53 53 45 4d 42 4c 59 00 00 00
  Address 0x60: 00 00 00 00 00 00 41 30 30 ff ff ff ff ff ff ff
Address 0x70: ff ff ff c2 ff ff ff ff ff ff ff ff ff ff ff ff
  da0    7836 MB  ATP IG eUSB SSD                        Nand Flash 0
AFEB 0                    BUILTIN      BUILTIN           Forwarding Engine
Processor
FPC 0                     BUILTIN      BUILTIN           MPC BUILTIN
FPC 1                     BUILTIN      BUILTIN           MPC BUILTIN
  MIC 0          REV 15   750-036132   CAAF7948          2xOC12/8xOC3 CC-CE
 Jedec Code:   0x7fb0            EEPROM Version:    0x02
 P/N:          750-036132        S/N:               CAAF7948
 Assembly ID:  0x0a1a            Assembly Version:  01.15
 Date:         07-03-2012        Assembly Flags:    0x00
 Version:      REV 15            CLEI Code:         IP9IAM2DAA
 ID: 2xOC12/8xOC3 CC-CE          FRU Model Number:  MIC-3D-8OC3-2OC12-ATM
 Board Information Record:
  Address 0x00: 12 01 05 03 05 ff ff ff ff ff ff ff ff ff ff ff
 I2C Hex Data:
  Address 0x00: 7f b0 02 ff 0a 1a 01 0f 52 45 56 20 31 35 00 00
  Address 0x10: 00 00 00 00 37 35 30 2d 30 33 36 31 33 32 00 00
  Address 0x20: 53 2f 4e 20 43 41 41 46 37 39 34 38 00 03 07 07
  Address 0x30: dc ff ff ff 12 01 05 03 05 ff ff ff ff ff ff ff
  Address 0x40: ff ff ff ff 01 49 50 39 49 41 4d 32 44 41 41 4d
  Address 0x50: 49 43 2d 33 44 2d 38 4f 43 33 2d 32 4f 43 31 32
  Address 0x60: 2d 41 54 4d 00 00 41 00 00 ff ff ff ff ff ff ff
  Address 0x70: ff ff ff e3 c0 02 a3 9c 00 00 00 00 0a 60 00 00
    PIC 0                 BUILTIN      BUILTIN           2xOC12/8xOC3 CC-CE
      Xcvr 0     REV 01   740-011615   PCQ0U2J           SFP-IR
      Xcvr 1     REV 01   740-016068   PJL7A6G           SFP-SR
      Xcvr 2     REV 01   740-016068   PJL7A5J           SFP-SR
      Xcvr 3     REV 01   740-016065   PJN5HPZ           SFP-SR
      Xcvr 4     REV 01   740-029122   PKB38TL           SFP-LR
      Xcvr 5     REV 01   740-011787   P6A107G           SFP-LR
      Xcvr 6     REV 01   740-029122   PKB38TR           SFP-LR
      Xcvr 7     REV 01   740-011787   PBK0NK3           SFP-LR
  MIC 1
FPC 2                     BUILTIN      BUILTIN           MPC BUILTIN
  MIC 0                   BUILTIN      BUILTIN           4x 10GE(LAN) SFP+
 Jedec Code:   0x0000            EEPROM Version:    0x00
 P/N:          BUILTIN           S/N:               BUILTIN
 Assembly ID:  0x0a60            Assembly Version:  00.00
 Date:         00-00-0000        Assembly Flags:    0x00
 ID: 4x 10GE(LAN) SFP+
 Board Information Record:
  Address 0x00: 00 00 00 00 00 00 00 00 00 00 00 00 00 00 00 00
 I2C Hex Data:
  Address 0x00: 00 00 00 00 0a 60 00 00 00 00 00 00 00 00 00 00
  Address 0x10: 00 00 00 00 42 55 49 4c 54 49 4e 00 4d 58 43 00
  Address 0x20: 42 55 49 4c 54 49 4e 00 4d 58 43 00 00 00 00 00
```

```
  Address 0x30: 00 00 00 00 00 00 00 00 00 00 00 00 00 00 00 00
  Address 0x40: 00 00 00 00 00 00 00 00 00 00 00 00 00 00 00 00
  Address 0x50: 00 00 00 00 00 00 00 00 00 00 00 00 00 00 00 00
  Address 0x60: 00 00 00 00 00 00 00 00 00 00 00 00 00 00 00 00
  Address 0x70: 00 00 00 00 c0 02 a5 04 7f b0 02 ff 0a 1a 01 0f
    PIC 0                 BUILTIN      BUILTIN           4x 10GE(LAN) SFP+
      Xcvr 0     REV 01   740-031980   B10F00465         SFP+-10G-SR
      Xcvr 1     REV 01   740-031980   B10F00461         SFP+-10G-SR
      Xcvr 2     REV 01   740-031980   B10G01545         SFP+-10G-SR
      Xcvr 3     REV 01   740-031980   B10G01385         SFP+-10G-SR
Fan Tray 0       REV 02   711-049570   CAAX6538          Fan Tray
 Jedec Code:   0x7fb0            EEPROM Version:    0x02
 P/N:          711-049570        S/N:               CAAX6538
 Assembly ID:  0x0b82            Assembly Version:  01.02
 Date:         03-01-2013        Assembly Flags:    0x00
 Version:      REV 02            CLEI Code:         PROTOXCLEI
 ID: Fan Tray                    FRU Model Number:  PROTO-ASSEMBLY
 Board Information Record:
  Address 0x00: ff ff ff ff ff ff ff ff ff ff ff ff ff ff ff ff
 I2C Hex Data:
  Address 0x00: 7f b0 02 ff 0b 82 01 02 52 45 56 20 30 32 00 00
  Address 0x10: 00 00 00 00 37 31 31 2d 30 34 39 35 37 30 00 00
  Address 0x20: 53 2f 4e 20 43 41 41 58 36 35 33 38 00 01 03 07
  Address 0x30: dd ff ff ff ff ff ff ff ff ff ff ff ff ff ff ff
  Address 0x40: ff ff ff ff 01 50 52 4f 54 4f 58 43 4c 45 49 50
  Address 0x50: 52 4f 54 4f 2d 41 53 53 45 4d 42 4c 59 00 00 00
  Address 0x60: 00 00 00 00 00 00 41 30 30 ff ff ff ff ff ff ff
  Address 0x70: ff ff ff c2 ff ff ff ff ff ff ff ff ff ff ff ff
```

show chassis hardware extensive (PTX10008 Router)

```
user@host> show chassis hardware extensive
Hardware inventory:
Item             Version  Part number  Serial number     Description
Chassis                                DE487             JNP10008 [PTX10008 -
PILOT BUILD V1.1]
 Jedec Code:   0x7fb0            EEPROM Version:    0x02
                                 S/N:               DE487
 Assembly ID:  0x0566            Assembly Version:  01.27
 Date:         08-08-2016        Assembly Flags:    0x00
                                 CLEI Code:         CMMUM00ARA
 ID: JNP10008                    FRU Model Number:  QFX10008-CHAS
 Board Information Record:
  Address 0x00: ad 01 08 00 30 b6 4f e9 74 c4 ff ff ff ff ff ff
 I2C Hex Data:
  Address 0x00: 7f b0 02 ff 05 66 01 1b 00 45 56 20 32 37 00 00
  Address 0x10: 00 00 00 00 00 35 30 2d 30 35 34 30 39 37 00 00
  Address 0x20: 44 45 34 38 37 00 00 00 00 00 00 00 00 08 08 07
  Address 0x30: e0 ff ff ff ad 01 08 00 30 b6 4f e9 74 c4 ff ff
  Address 0x40: ff ff ff ff 01 43 4d 4d 55 4d 30 30 41 52 41 51
  Address 0x50: 46 58 31 30 30 30 38 2d 43 48 41 53 00 00 00 00
  Address 0x60: 00 00 00 00 00 00 41 44 00 ff ff ff ff ff ff ff
  Address 0x70: ff ff ff 63 44 45 34 38 37 00 00 00 00 00 00 00
Midplane         REV 27   750-054097   ACPD4307          Midplane 8
 Jedec Code:   0x7fb0            EEPROM Version:    0x02
 P/N:          750-054097        S/N:               ACPD4307
 Assembly ID:  0x0be3            Assembly Version:  01.27
 Date:         08-08-2016        Assembly Flags:    0x00
 Version:      REV 27            CLEI Code:         CMMUM00ARA
 ID: QFX10008 Midplane           FRU Model Number:  QFX10008-CHAS
 Board Information Record:
```

```
  Address 0x00: ad 01 08 00 30 b6 4f e9 74 c4 ff ff ff ff ff ff
 I2C Hex Data:
  Address 0x00: 7f b0 02 ff 0b e3 01 1b 52 45 56 20 32 37 00 00
  Address 0x10: 00 00 00 00 37 35 30 2d 30 35 34 30 39 37 00 00
  Address 0x20: 53 2f 4e 20 41 43 50 44 34 33 30 37 00 08 08 07
  Address 0x30: e0 ff ff ff ad 01 08 00 30 b6 4f e9 74 c4 ff ff
  Address 0x40: ff ff ff ff 01 43 4d 4d 55 4d 30 30 41 52 41 51
  Address 0x50: 46 58 31 30 30 30 38 2d 43 48 41 53 00 00 00 00
  Address 0x60: 00 00 00 00 00 00 41 44 00 ff ff ff ff ff ff ff
  Address 0x70: ff ff ff 63 44 45 34 38 37 00 00 00 00 00 00 00
Routing Engine 0          BUILTIN      BUILTIN           RE-PTX-2X00x4
  vtbd0 15360 MB                                         Virtio Block Disk
  vtbd1 15360 MB                                         Virtio Block Disk
  ada0    128 MB  QEMU                 QM00002           Virtio Block Disk
  usb0 (addr 0.1) EHCI root HUB 0      Intel             uhub0
  usb1 (addr 0.2) product 0x0020 32    vendor 0x8087     uhub1
Routing Engine 1          BUILTIN      BUILTIN           RE-PTX-2X00x4
  vtbd0 15360 MB                                         Virtio Block Disk
  vtbd1 15360 MB                                         Virtio Block Disk
  ada0    128 MB  QEMU                 QM00002           Virtio Block Disk
  usb0 (addr 0.1) EHCI root HUB 0      Intel             uhub0
  usb1 (addr 0.2) product 0x0020 32    vendor 0x8087     uhub1
CB 0             REV 02   750-068820   ACNZ4440          Control Board
 Jedec Code:   0x7fb0            EEPROM Version:    0x02
 P/N:          750-068820        S/N:               ACNZ4440
 Assembly ID:  0x0b9d            Assembly Version:  01.02
 Date:         06-13-2016        Assembly Flags:    0x00
 Version:      REV 02            CLEI Code:         CMUCAH3CTB
 ID: Control Board               FRU Model Number:  QFX10000-RE
 Board Information Record:
  Address 0x00: ad 01 00 10 84 c1 c1 54 10 be ff ff ff ff ff ff
 I2C Hex Data:
  Address 0x00: 7f b0 02 ff 0b 9d 01 02 52 45 56 20 30 32 00 00
  Address 0x10: 00 00 00 00 37 35 30 2d 30 36 38 38 32 30 00 00
  Address 0x20: 53 2f 4e 20 41 43 4e 5a 34 34 34 30 00 0d 06 07
  Address 0x30: e0 ff ff ff ad 01 00 10 84 c1 c1 54 10 be ff ff
  Address 0x40: ff ff ff ff 01 43 4d 55 43 41 48 33 43 54 42 51
  Address 0x50: 46 58 31 30 30 30 30 2d 52 45 00 00 00 00 00 00
  Address 0x60: 00 00 00 00 00 00 42 41 00 ff ff ff ff ff ff ff
  Address 0x70: ff ff ff db ff ff ff ff ff ff ff ff ff ff ff ff
CB 1             REV 02   750-068820   ACNZ8284          Control Board
 Jedec Code:   0x7fb0            EEPROM Version:    0x02
 P/N:          750-068820        S/N:               ACNZ8284
 Assembly ID:  0x0b9d            Assembly Version:  01.02
 Date:         06-27-2016        Assembly Flags:    0x00
 Version:      REV 02            CLEI Code:         CMUCAH3CTB
 ID: Control Board               FRU Model Number:  QFX10000-RE
 Board Information Record:
  Address 0x00: ad 01 00 10 84 c1 c1 e5 b1 46 ff ff ff ff ff ff
 I2C Hex Data:
  Address 0x00: 7f b0 02 ff 0b 9d 01 02 52 45 56 20 30 32 00 00
  Address 0x10: 00 00 00 00 37 35 30 2d 30 36 38 38 32 30 00 00
  Address 0x20: 53 2f 4e 20 41 43 4e 5a 38 32 38 34 00 1b 06 07
  Address 0x30: e0 ff ff ff ad 01 00 10 84 c1 c1 e5 b1 46 ff ff
  Address 0x40: ff ff ff ff 01 43 4d 55 43 41 48 33 43 54 42 51
  Address 0x50: 46 58 31 30 30 30 30 2d 52 45 00 00 00 00 00 00
  Address 0x60: 00 00 00 00 00 00 42 41 00 ff ff ff ff ff ff ff
  Address 0x70: ff ff ff db ff ff ff ff ff ff ff ff ff ff ff ff
FPC 0            REV 36   750-051354   ACNP4679          LC1102 - 12C / 36Q /
144X
 Jedec Code:   0x7fb0            EEPROM Version:    0x02
```

```
P/N:          750-051354        S/N:               ACNP4679
Assembly ID:  0x0be7            Assembly Version:  01.36
Date:         11-11-2016        Assembly Flags:    0x00
Version:      REV 36            CLEI Code:         CMUIAM9BAA
ID: ULC-36Q-12Q28               FRU Model Number:  QFX10000-36Q
Board Information Record:
 Address 0x00: ff ff ff ff ff ff ff ff ff ff ff ff ff ff ff ff
I2C Hex Data:
 Address 0x00: 7f b0 02 ff 0b e7 01 24 52 45 56 20 33 36 00 00
 Address 0x10: 00 00 00 00 37 35 30 2d 30 35 31 33 35 34 00 00
 Address 0x20: 53 2f 4e 20 41 43 4e 50 34 36 37 39 00 0b 0b 07
 Address 0x30: e0 ff ff ff ff ff ff ff ff ff ff ff ff ff ff ff
 Address 0x40: ff ff ff ff 01 43 4d 55 49 41 4d 39 42 41 41 51
 Address 0x50: 46 58 31 30 30 30 30 2d 33 36 51 00 00 00 00 00
 Address 0x60: 00 00 00 00 00 00 42 45 00 ff ff ff ff ff ff ff
 Address 0x70: ff ff ff fe ff ff ff ff ff ff ff ff ff ff ff ff
 CPU                     BUILTIN      BUILTIN           FPC CPU
Jedec Code:   0x7fb0            EEPROM Version:    0x02
P/N:          BUILTIN           S/N:               BUILTIN
Assembly ID:  0xf020            Assembly Version:  02.17
Date:         04-19-2012        Assembly Flags:    0x00
Board Information Record:
 Address 0x00: ad 01 01 04 ac 4b c8 1d f7 b6 ff ff ff ff ff ff
I2C Hex Data:
 Address 0x00: 7f b0 02 ff f0 20 02 11 00 e0 3c fa 09 00 70 87
 Address 0x10: 09 38 bb ff 42 55 49 4c 54 49 4e 00 00 e0 3c fa
 Address 0x20: 42 55 49 4c 54 49 4e 00 42 55 49 4c 00 13 04 07
 Address 0x30: dc ff ff ff ad 01 01 04 ac 4b c8 1d f7 b6 ff ff
 Address 0x40: ff ff ff ff 00 00 00 00 00 00 00 00 00 00 00 00
 Address 0x50: 00 00 00 00 00 00 00 00 00 00 00 00 00 00 00 00
 Address 0x60: 00 00 00 00 00 00 45 00 00 ff ff ff ff ff ff ff
 Address 0x70: ff ff ff f3 50 36 36 36 36 00 00 00 00 00 00 00
 PIC 0                  BUILTIN      BUILTIN          12x100GE/36x40GE/144x10GE

Jedec Code:   0x7fb0            EEPROM Version:    0x02
P/N:          BUILTIN           S/N:               BUILTIN
Assembly ID:  0xf050            Assembly Version:  02.17
Date:         04-19-2012        Assembly Flags:    0x00
Board Information Record:
 Address 0x00: ad 01 01 04 ac 4b c8 1d f7 b6 ff ff ff ff ff ff
I2C Hex Data:
 Address 0x00: 7f b0 02 ff f0 50 02 11 00 00 00 00 07 0a 20 45
 Address 0x10: 6c 61 70 73 42 55 49 4c 54 49 4e 00 25 73 3a 20
 Address 0x20: 42 55 49 4c 54 49 4e 00 25 73 3a 20 00 13 04 07
 Address 0x30: dc ff ff ff ad 01 01 04 ac 4b c8 1d f7 b6 ff ff
 Address 0x40: ff ff ff ff 01 00 00 00 00 00 00 00 00 00 00 00
 Address 0x50: 00 00 00 00 00 00 00 00 00 00 00 00 00 00 00 00
 Address 0x60: 00 00 00 00 00 00 45 00 00 ff ff ff ff ff ff ff
 Address 0x70: ff ff ff f3 55 55 55 55 55 55 55 55 55 55 55 55
   Xcvr 1       REV 01   740-058734   1ECQ113834D       QSFP-100GBASE-SR4
   Xcvr 5       REV 01   740-058734   1ECQ1137067       QSFP-100GBASE-SR4
   Xcvr 6       REV 01   740-054053   QF3205SD          QSFP+-4X10G-SR
   Xcvr 7       REV 01   740-058734   1ECQ11381MP       QSFP-100GBASE-SR4
   Xcvr 11      REV 01   740-061405   1ACQ110507K       QSFP-100GBASE-SR4
   Xcvr 13      REV 01   740-058734   1ECQ11390ZB       QSFP-100GBASE-SR4
   Xcvr 17      REV 01   740-058734   1ECQ11381M1       QSFP-100GBASE-SR4
   Xcvr 19      REV 01   740-058734   1ECQ11381JS       QSFP-100GBASE-SR4
   Xcvr 23      REV 01   740-058734   1ACQ112000E       QSFP-100GBASE-SR4
   Xcvr 25      REV 01   740-058734   1ECQ11381NT       QSFP-100GBASE-SR4
   Xcvr 28      REV 01   740-054053   QG1502WV          QSFP+-4X10G-SR
   Xcvr 29      REV 01   740-058734   1ACQ112000D       QSFP-100GBASE-SR4
```

```
    Xcvr 33      REV 01   740-058734   1ACQ1134065       QSFP-100GBASE-SR4
    Xcvr 34      REV 01   740-067442   XV20L4L           QSFP+-40G-SR4
FPC 1            REV 33   750-051354   ACNX8831          LC1102 - 12C / 36Q /
144X
 Jedec Code:   0x7fb0            EEPROM Version:    0x02
 P/N:          750-051354        S/N:               ACNX8831
 Assembly ID:  0x0be7            Assembly Version:  01.33
 Date:         06-03-2016        Assembly Flags:    0x00
 Version:      REV 33            CLEI Code:         CMUIAM9BAA
 ID: ULC-36Q-12Q28               FRU Model Number:  QFX10000-36Q
 Board Information Record:
  Address 0x00: ff ff ff ff ff ff ff ff ff ff ff ff ff ff ff ff
 I2C Hex Data:
  Address 0x00: 7f b0 02 ff 0b e7 01 21 52 45 56 20 33 33 00 00
  Address 0x10: 00 00 00 00 37 35 30 2d 30 35 31 33 35 34 00 00
  Address 0x20: 53 2f 4e 20 41 43 4e 58 38 38 33 31 00 03 06 07
  Address 0x30: e0 ff ff ff ff ff ff ff ff ff ff ff ff ff ff ff
  Address 0x40: ff ff ff ff 01 43 4d 55 49 41 4d 39 42 41 41 51
  Address 0x50: 46 58 31 30 30 30 30 2d 33 36 51 00 00 00 00 00
  Address 0x60: 00 00 00 00 00 00 42 42 00 ff ff ff ff ff ff ff
  Address 0x70: ff ff ff fb ff ff ff ff ff ff ff ff ff ff ff ff
  CPU                     BUILTIN      BUILTIN           FPC CPU
 Jedec Code:   0x7fb0            EEPROM Version:    0x02
 P/N:          BUILTIN           S/N:               BUILTIN
 Assembly ID:  0xf020            Assembly Version:  02.17
 Date:         04-19-2012        Assembly Flags:    0x00
 Board Information Record:
  Address 0x00: ad 01 01 04 ac 4b c8 1d f7 b6 ff ff ff ff ff ff
 I2C Hex Data:
  Address 0x00: 7f b0 02 ff f0 20 02 11 00 20 3e fa 09 00 10 8a
  Address 0x10: 09 38 bb ff 42 55 49 4c 54 49 4e 00 00 20 3e fa
  Address 0x20: 42 55 49 4c 54 49 4e 00 42 55 49 4c 00 13 04 07
  Address 0x30: dc ff ff ff ad 01 01 04 ac 4b c8 1d f7 b6 ff ff
  Address 0x40: ff ff ff ff 00 00 00 00 00 00 00 00 00 00 00 00
  Address 0x50: 00 00 00 00 00 00 00 00 00 00 00 00 00 00 00 00
  Address 0x60: 00 00 00 00 00 00 45 00 00 ff ff ff ff ff ff ff
  Address 0x70: ff ff ff f3 50 36 36 36 36 00 00 00 00 00 00 00
  PIC 0                  BUILTIN      BUILTIN          12x100GE/36x40GE/144x10GE

 Jedec Code:   0x7fb0            EEPROM Version:    0x02
 P/N:          BUILTIN           S/N:               BUILTIN
 Assembly ID:  0xf050            Assembly Version:  02.17
 Date:         04-19-2012        Assembly Flags:    0x00
 Board Information Record:
  Address 0x00: ad 01 01 04 ac 4b c8 1d f7 b6 ff ff ff ff ff ff
 I2C Hex Data:
  Address 0x00: 7f b0 02 ff f0 50 02 11 00 00 00 00 07 0a 20 45
  Address 0x10: 6c 61 70 73 42 55 49 4c 54 49 4e 00 25 73 3a 20
  Address 0x20: 42 55 49 4c 54 49 4e 00 25 73 3a 20 00 13 04 07
  Address 0x30: dc ff ff ff ad 01 01 04 ac 4b c8 1d f7 b6 ff ff
  Address 0x40: ff ff ff ff 01 00 00 00 00 00 00 00 00 00 00 00
  Address 0x50: 00 00 00 00 00 00 00 00 00 00 00 00 00 00 00 00
  Address 0x60: 00 00 00 00 00 00 45 00 00 ff ff ff ff ff ff ff
  Address 0x70: ff ff ff f3 55 55 55 55 55 55 55 55 55 55 55 55
    Xcvr 5                NON-JNPR     37700171YY0084    QSFP-100GBASE-LR4
    Xcvr 25               NON-JNPR     GDA2017459        QSFP-100GBASE-LR4
    Xcvr 29               NON-JNPR     GDF2008750        QSFP-100GBASE-LR4
FPC 2            REV 32   750-051357   ACPB0341          LC1101 - 30C / 30Q / 96X

 Jedec Code:   0x7fb0            EEPROM Version:    0x02
 P/N:          750-051357        S/N:               ACPB0341
```

```
  Assembly ID:  0x0be8            Assembly Version:  01.32
  Date:         06-04-2016        Assembly Flags:    0x00
  Version:      REV 32            CLEI Code:         CMUIANABAA
  ID: ULC-30Q28                   FRU Model Number:  QFX10000-30C
  Board Information Record:
   Address 0x00: ff ff ff ff ff ff ff ff ff ff ff ff ff ff ff ff
  I2C Hex Data:
   Address 0x00: 7f b0 02 ff 0b e8 01 20 52 45 56 20 33 32 00 00
   Address 0x10: 00 00 00 00 37 35 30 2d 30 35 31 33 35 37 00 00
   Address 0x20: 53 2f 4e 20 41 43 50 42 30 33 34 31 00 04 06 07
   Address 0x30: e0 ff ff ff ff ff ff ff ff ff ff ff ff ff ff ff
   Address 0x40: ff ff ff ff 01 43 4d 55 49 41 4e 41 42 41 41 51
   Address 0x50: 46 58 31 30 30 30 30 2d 33 30 43 00 00 00 00 00
   Address 0x60: 00 00 00 00 00 00 41 42 00 ff ff ff ff ff ff ff
   Address 0x70: ff ff ff ef ff ff ff ff ff ff ff ff ff ff ff ff
   CPU                     BUILTIN      BUILTIN           FPC CPU
  Jedec Code:   0x7fb0            EEPROM Version:    0x02
  P/N:          BUILTIN           S/N:               BUILTIN
  Assembly ID:  0xf020            Assembly Version:  02.17
  Date:         04-19-2012        Assembly Flags:    0x00
  Board Information Record:
   Address 0x00: ad 01 01 04 ac 4b c8 1d f7 b6 ff ff ff ff ff ff
  I2C Hex Data:
   Address 0x00: 7f b0 02 ff f0 20 02 11 00 00 67 00 0a 00 b0 8c
   Address 0x10: 09 38 bb ff 42 55 49 4c 54 49 4e 00 00 00 67 00
   Address 0x20: 42 55 49 4c 54 49 4e 00 42 55 49 4c 00 13 04 07
   Address 0x30: dc ff ff ff ad 01 01 04 ac 4b c8 1d f7 b6 ff ff
   Address 0x40: ff ff ff ff 00 00 00 00 00 00 00 00 00 00 00 00
   Address 0x50: 00 00 00 00 00 00 00 00 00 00 00 00 00 00 00 00
   Address 0x60: 00 00 00 00 00 00 45 00 00 ff ff ff ff ff ff ff
   Address 0x70: ff ff ff f3 50 36 36 36 36 00 00 00 00 00 00 00
   PIC 0                   BUILTIN      BUILTIN           30x100GE/30x40GE/96x10GE

  Jedec Code:   0x7fb0            EEPROM Version:    0x02
  P/N:          BUILTIN           S/N:               BUILTIN
  Assembly ID:  0xf050            Assembly Version:  02.17
  Date:         04-19-2012        Assembly Flags:    0x00
  Board Information Record:
   Address 0x00: ad 01 01 04 ac 4b c8 1d f7 b6 ff ff ff ff ff ff
  I2C Hex Data:
   Address 0x00: 7f b0 02 ff f0 50 02 11 00 00 00 00 07 0a 20 45
   Address 0x10: 6c 61 70 73 42 55 49 4c 54 49 4e 00 25 73 3a 20
   Address 0x20: 42 55 49 4c 54 49 4e 00 25 73 3a 20 00 13 04 07
   Address 0x30: dc ff ff ff ad 01 01 04 ac 4b c8 1d f7 b6 ff ff
   Address 0x40: ff ff ff ff 01 00 00 00 00 00 00 00 00 00 00 00
   Address 0x50: 00 00 00 00 00 00 00 00 00 00 00 00 00 00 00 00
   Address 0x60: 00 00 00 00 00 00 45 00 00 ff ff ff ff ff ff ff
   Address 0x70: ff ff ff f3 de ad be ef de ad be ef de ad be ef
     Xcvr 0                NON-JNPR     37700170YZC305    QSFP-100GBASE-LR4
     Xcvr 4                NON-JNPR     37700170YZC306    QSFP-100GBASE-LR4
     Xcvr 9       REV 01   740-054053   QF36013S          QSFP+-4X10G-SR
     Xcvr 12      REV 01   740-067442   XV301AU           QSFP+-40G-SR4
     Xcvr 14      REV 01   740-043308   UWE2CG9           QSFP+-40G-LR4
     Xcvr 16      REV 01   740-043308   UWH141S           QSFP+-40G-LR4
     Xcvr 17      REV 01   740-058734   1ECQ11180VH       QSFP-100GBASE-SR4
     Xcvr 18      REV 01   740-054050   INFAJ0492237      QSFP+-4X10G-LR
     Xcvr 26      REV 01   740-058734   1ACQ111803N       QSFP-100GBASE-SR4
     Xcvr 27      REV 01   740-058734   1ACQ113405S       QSFP-100GBASE-SR4
FPC 3            REV 35   750-051357   ACPD2186          LC1101 - 30C / 30Q / 96X

  Jedec Code:   0x7fb0            EEPROM Version:    0x02
```

```
 P/N:          750-051357        S/N:               ACPD2186
 Assembly ID:  0x0be8            Assembly Version:  01.35
 Date:         09-21-2016        Assembly Flags:    0x00
 Version:      REV 35            CLEI Code:         CMUIANABAA
 ID: ULC-30Q28                   FRU Model Number:  QFX10000-30C
 Board Information Record:
  Address 0x00: ff ff ff ff ff ff ff ff ff ff ff ff ff ff ff ff
 I2C Hex Data:
  Address 0x00: 7f b0 02 ff 0b e8 01 23 52 45 56 20 33 35 00 00
  Address 0x10: 00 00 00 00 37 35 30 2d 30 35 31 33 35 37 00 00
  Address 0x20: 53 2f 4e 20 41 43 50 44 32 31 38 36 00 15 09 07
  Address 0x30: e0 ff ff ff ff ff ff ff ff ff ff ff ff ff ff ff
  Address 0x40: ff ff ff ff 01 43 4d 55 49 41 4e 41 42 41 41 51
  Address 0x50: 46 58 31 30 30 30 30 2d 33 30 43 00 00 00 00 00
  Address 0x60: 00 00 00 00 00 00 41 44 00 ff ff ff ff ff ff ff
  Address 0x70: ff ff ff f1 ff ff ff ff ff ff ff ff ff ff ff ff
  CPU                     BUILTIN      BUILTIN           FPC CPU
 Jedec Code:   0x7fb0            EEPROM Version:    0x02
 P/N:          BUILTIN           S/N:               BUILTIN
 Assembly ID:  0xf020            Assembly Version:  02.17
 Date:         04-19-2012        Assembly Flags:    0x00
 Board Information Record:
  Address 0x00: ad 01 01 04 ac 4b c8 1d f7 b6 ff ff ff ff ff ff
 I2C Hex Data:
  Address 0x00: 7f b0 02 ff f0 20 02 11 00 80 70 fa 09 00 50 8f
  Address 0x10: 09 38 bb ff 42 55 49 4c 54 49 4e 00 00 80 70 fa
  Address 0x20: 42 55 49 4c 54 49 4e 00 42 55 49 4c 00 13 04 07
  Address 0x30: dc ff ff ff ad 01 01 04 ac 4b c8 1d f7 b6 ff ff
  Address 0x40: ff ff ff ff 00 00 00 00 00 00 00 00 00 00 00 00
  Address 0x50: 00 00 00 00 00 00 00 00 00 00 00 00 00 00 00 00
  Address 0x60: 00 00 00 00 00 00 45 00 00 ff ff ff ff ff ff ff
  Address 0x70: ff ff ff f3 50 36 36 36 36 00 00 00 00 00 00 00
  PIC 0                   BUILTIN      BUILTIN           30x100GE/30x40GE/96x10GE

 Jedec Code:   0x7fb0            EEPROM Version:    0x02
 P/N:          BUILTIN           S/N:               BUILTIN
 Assembly ID:  0xf050            Assembly Version:  02.17
 Date:         04-19-2012        Assembly Flags:    0x00
 Board Information Record:
  Address 0x00: ad 01 01 04 ac 4b c8 1d f7 b6 ff ff ff ff ff ff
 I2C Hex Data:
  Address 0x00: 7f b0 02 ff f0 50 02 11 00 00 00 00 07 0a 20 45
  Address 0x10: 6c 61 70 73 42 55 49 4c 54 49 4e 00 25 73 3a 20
  Address 0x20: 42 55 49 4c 54 49 4e 00 25 73 3a 20 00 13 04 07
  Address 0x30: dc ff ff ff ad 01 01 04 ac 4b c8 1d f7 b6 ff ff
  Address 0x40: ff ff ff ff 01 00 00 00 00 00 00 00 00 00 00 00
  Address 0x50: 00 00 00 00 00 00 00 00 00 00 00 00 00 00 00 00
  Address 0x60: 00 00 00 00 00 00 45 00 00 ff ff ff ff ff ff ff
  Address 0x70: ff ff ff f3 55 55 55 55 55 55 55 55 55 55 55 55
    Xcvr 0       REV 01   740-061409   1GCQA1470A3       QSFP-100GBASE-LR4-T2
    Xcvr 1       REV 01   740-061409   1GCQA1470XC       QSFP-100GBASE-LR4-T2
    Xcvr 7                NON-JNPR     FG4550500008      QSFP-100G-CWDM4
    Xcvr 24      REV 01   740-058734   1ECQ11381LX       QSFP-100GBASE-SR4
    Xcvr 29      REV 01   740-043308   UWE0UYS           QSFP+-40G-LR4
FPC 5            REV 08   750-068822   ACPF0057          LC1102 - 12C / 36Q /
144X
 Jedec Code:   0x7fb0            EEPROM Version:    0x02
 P/N:          750-068822        S/N:               ACPF0057
 Assembly ID:  0x0be7            Assembly Version:  01.08
 Date:         09-01-2016        Assembly Flags:    0x00
 Version:      REV 08            CLEI Code:         CMUIAM9BAB
```

```
 ID: ULC-36Q-12Q28               FRU Model Number:  QFX10000-36Q
 Board Information Record:
  Address 0x00: ff ff ff ff ff ff ff ff ff ff ff ff ff ff ff ff
 I2C Hex Data:
  Address 0x00: 7f b0 02 ff 0b e7 01 08 52 45 56 20 30 38 00 00
  Address 0x10: 00 00 00 00 37 35 30 2d 30 36 38 38 32 32 00 00
  Address 0x20: 53 2f 4e 20 41 43 50 46 30 30 35 37 00 01 09 07
  Address 0x30: e0 ff ff ff ff ff ff ff ff ff ff ff ff ff ff ff
  Address 0x40: ff ff ff ff 01 43 4d 55 49 41 4d 39 42 41 42 51
  Address 0x50: 46 58 31 30 30 30 30 2d 33 36 51 00 00 00 00 00
  Address 0x60: 00 00 00 00 00 00 42 45 00 ff ff ff ff ff ff ff
  Address 0x70: ff ff ff ff ff ff ff ff ff ff ff ff ff ff ff ff
  CPU                     BUILTIN      BUILTIN           FPC CPU
 Jedec Code:   0x7fb0            EEPROM Version:    0x02
 P/N:          BUILTIN           S/N:               BUILTIN
 Assembly ID:  0xf020            Assembly Version:  02.17
 Date:         04-19-2012        Assembly Flags:    0x00
 Board Information Record:
  Address 0x00: ad 01 01 04 ac 4b c8 1d f7 b6 ff ff ff ff ff ff
 I2C Hex Data:
  Address 0x00: 7f b0 02 ff f0 20 02 11 00 00 3d fa 09 00 90 94
  Address 0x10: 09 38 bb ff 42 55 49 4c 54 49 4e 00 00 00 3d fa
  Address 0x20: 42 55 49 4c 54 49 4e 00 42 55 49 4c 00 13 04 07
  Address 0x30: dc ff ff ff ad 01 01 04 ac 4b c8 1d f7 b6 ff ff
  Address 0x40: ff ff ff ff 00 00 00 00 00 00 00 00 00 00 00 00
  Address 0x50: 00 00 00 00 00 00 00 00 00 00 00 00 00 00 00 00
  Address 0x60: 00 00 00 00 00 00 45 00 00 ff ff ff ff ff ff ff
  Address 0x70: ff ff ff f3 50 36 36 36 36 00 00 00 00 00 00 00
  PIC 0                  BUILTIN      BUILTIN          12x100GE/36x40GE/144x10GE

 Jedec Code:   0x7fb0            EEPROM Version:    0x02
 P/N:          BUILTIN           S/N:               BUILTIN
 Assembly ID:  0xf050            Assembly Version:  02.17
 Date:         04-19-2012        Assembly Flags:    0x00
 Board Information Record:
  Address 0x00: ad 01 01 04 ac 4b c8 1d f7 b6 ff ff ff ff ff ff
 I2C Hex Data:
  Address 0x00: 7f b0 02 ff f0 50 02 11 00 00 00 00 07 0a 20 45
  Address 0x10: 6c 61 70 73 42 55 49 4c 54 49 4e 00 25 73 3a 20
  Address 0x20: 42 55 49 4c 54 49 4e 00 25 73 3a 20 00 13 04 07
  Address 0x30: dc ff ff ff ad 01 01 04 ac 4b c8 1d f7 b6 ff ff
  Address 0x40: ff ff ff ff 01 00 00 00 00 00 00 00 00 00 00 00
  Address 0x50: 00 00 00 00 00 00 00 00 00 00 00 00 00 00 00 00
  Address 0x60: 00 00 00 00 00 00 45 00 00 ff ff ff ff ff ff ff
  Address 0x70: ff ff ff f3 55 55 55 55 55 55 55 55 55 55 55 55
FPC 6            REV 08   750-068822   ACPE9951          LC1102 - 12C / 36Q /
144X
 Jedec Code:   0x7fb0            EEPROM Version:    0x02
 P/N:          750-068822        S/N:               ACPE9951
 Assembly ID:  0x0be7            Assembly Version:  01.08
 Date:         09-01-2016        Assembly Flags:    0x00
 Version:      REV 08            CLEI Code:         CMUIAM9BAB
 ID: ULC-36Q-12Q28               FRU Model Number:  QFX10000-36Q
 Board Information Record:
  Address 0x00: ff ff ff ff ff ff ff ff ff ff ff ff ff ff ff ff
 I2C Hex Data:
  Address 0x00: 7f b0 02 ff 0b e7 01 08 52 45 56 20 30 38 00 00
  Address 0x10: 00 00 00 00 37 35 30 2d 30 36 38 38 32 32 00 00
  Address 0x20: 53 2f 4e 20 41 43 50 45 39 39 35 31 00 01 09 07
  Address 0x30: e0 ff ff ff ff ff ff ff ff ff ff ff ff ff ff ff
  Address 0x40: ff ff ff ff 01 43 4d 55 49 41 4d 39 42 41 42 51
```

```
  Address 0x50: 46 58 31 30 30 30 30 2d 33 36 51 00 00 00 00 00
  Address 0x60: 00 00 00 00 00 00 42 45 00 ff ff ff ff ff ff ff
  Address 0x70: ff ff ff ff ff ff ff ff ff ff ff ff ff ff ff ff
  CPU                     BUILTIN      BUILTIN           FPC CPU
 Jedec Code:   0x7fb0            EEPROM Version:    0x02
 P/N:          BUILTIN           S/N:               BUILTIN
 Assembly ID:  0xf020            Assembly Version:  02.17
 Date:         04-19-2012        Assembly Flags:    0x00
 Board Information Record:
  Address 0x00: ad 01 01 04 ac 4b c8 1d f7 b6 ff ff ff ff ff ff
 I2C Hex Data:
  Address 0x00: 7f b0 02 ff f0 20 02 11 00 c0 3e fa 09 00 30 97
  Address 0x10: 09 38 bb ff 42 55 49 4c 54 49 4e 00 00 c0 3e fa
  Address 0x20: 42 55 49 4c 54 49 4e 00 42 55 49 4c 00 13 04 07
  Address 0x30: dc ff ff ff ad 01 01 04 ac 4b c8 1d f7 b6 ff ff
  Address 0x40: ff ff ff ff 00 00 00 00 00 00 00 00 00 00 00 00
  Address 0x50: 00 00 00 00 00 00 00 00 00 00 00 00 00 00 00 00
  Address 0x60: 00 00 00 00 00 00 45 00 00 ff ff ff ff ff ff ff
  Address 0x70: ff ff ff f3 50 36 36 36 36 00 00 00 00 00 00 00
  PIC 0                  BUILTIN      BUILTIN          12x100GE/36x40GE/144x10GE

 Jedec Code:   0x7fb0            EEPROM Version:    0x02
 P/N:          BUILTIN           S/N:               BUILTIN
 Assembly ID:  0xf050            Assembly Version:  02.17
 Date:         04-19-2012        Assembly Flags:    0x00
 Board Information Record:
  Address 0x00: ad 01 01 04 ac 4b c8 1d f7 b6 ff ff ff ff ff ff
 I2C Hex Data:
  Address 0x00: 7f b0 02 ff f0 50 02 11 00 00 00 00 07 0a 20 45
  Address 0x10: 6c 61 70 73 42 55 49 4c 54 49 4e 00 25 73 3a 20
  Address 0x20: 42 55 49 4c 54 49 4e 00 25 73 3a 20 00 13 04 07
  Address 0x30: dc ff ff ff ad 01 01 04 ac 4b c8 1d f7 b6 ff ff
  Address 0x40: ff ff ff ff 01 00 00 00 00 00 00 00 00 00 00 00
  Address 0x50: 00 00 00 00 00 00 00 00 00 00 00 00 00 00 00 00
  Address 0x60: 00 00 00 00 00 00 45 00 00 ff ff ff ff ff ff ff
  Address 0x70: ff ff ff f3 55 55 55 55 55 55 55 55 55 55 55 55
    Xcvr 1       REV 01   740-054053   QF3208LG          QSFP+-4X10G-SR
    Xcvr 7       REV 01   740-067442   XV20LGN           QSFP+-40G-SR4
    Xcvr 8       REV 01   740-067442   XV20VMV           QSFP+-40G-SR4
    Xcvr 9       REV 01   740-067442   XV20KCN           QSFP+-40G-SR4
    Xcvr 10      REV 01   740-067442   XU504QD           QSFP+-40G-SR4
    Xcvr 11      REV 01   740-067442   XU504X7           QSFP+-40G-SR4
    Xcvr 12      REV 01   740-067442   XU504W8           QSFP+-40G-SR4
    Xcvr 16      REV 01   740-032986   QF4301JP          QSFP+-40G-SR4
    Xcvr 17      REV 01   740-032986   QF4303AE          QSFP+-40G-SR4
    Xcvr 18      REV 01   740-054050   INFAJ0492400      QSFP+-4X10G-LR
    Xcvr 19      REV 01   740-054050   INFAJ0492142      QSFP+-4X10G-LR
    Xcvr 24      REV 01   740-032986   QF4301KB          QSFP+-40G-SR4
    Xcvr 25      REV 01   740-032986   QF4303YP          QSFP+-40G-SR4
    Xcvr 30      REV 01   740-067442   XV300ZX           QSFP+-40G-SR4
    Xcvr 31      REV 01   740-043308   UWH2KBW           QSFP+-40G-LR4
    Xcvr 34      REV 01   740-054053   QG1501YU          QSFP+-4X10G-SR
FPD Board        REV 07   711-054687   ACPC7142          Front Panel Display
 Jedec Code:   0x7fb0            EEPROM Version:    0x01
 P/N:          711-054687        S/N:               ACPC7142
 Assembly ID:  0x0bf2            Assembly Version:  01.07
 Date:         07-22-2016        Assembly Flags:    0x00
 Version:      REV 07
 ID: QFX10000 FPD
 Board Information Record:
  Address 0x00: ff ff ff ff ff ff ff ff ff ff ff ff ff ff ff ff
```

```
 I2C Hex Data:
  Address 0x00: 7f b0 01 ff 0b f2 01 07 52 45 56 20 30 37 00 00
  Address 0x10: 00 00 00 00 37 31 31 2d 30 35 34 36 38 37 00 00
  Address 0x20: 53 2f 4e 20 41 43 50 43 37 31 34 32 00 16 07 07
  Address 0x30: e0 ff ff ff ff ff ff ff ff ff ff ff ff ff ff ff
  Address 0x40: ff ff ff ff ff ff ff ff ff ff ff ff ff ff ff ff
  Address 0x50: ff ff ff ff ff ff ff ff ff ff ff ff ff ff ff ff
  Address 0x60: ff ff ff ff ff ff ff ff ff ff ff ff ff ff ff ff
  Address 0x70: ff ff ff ff ff ff ff ff ff ff ff ff ff ff ff ff
Power Supply 0   REV 02   740-049388   1EDL62102N9       Power Supply AC
 Jedec Code:   0x7fb0            EEPROM Version:    0x02
 P/N:          740-049388        S/N:               1EDL62102N9
 Assembly ID:  0x0483            Assembly Version:  01.02
 Date:         05-25-2016        Assembly Flags:    0x00
 Version:      REV 02            CLEI Code:         CMUPADNBAA
 ID: QFX10000 AC                 FRU Model Number:  QFX10000-PWR-AC
 Board Information Record:
  Address 0x00: ff ff ff ff ff ff ff ff ff ff ff ff ff ff ff ff
 I2C Hex Data:
  Address 0x00: 7f b0 02 ff 04 83 01 02 52 45 56 20 30 32 00 00
  Address 0x10: 00 00 00 00 37 34 30 2d 30 34 39 33 38 38 00 00
  Address 0x20: 31 45 44 4c 36 32 31 30 32 4e 39 00 00 19 05 07
  Address 0x30: e0 ff ff ff ff ff ff ff ff ff ff ff ff ff ff ff
  Address 0x40: ff ff ff ff 01 43 4d 55 50 41 44 4e 42 41 41 51
  Address 0x50: 46 58 31 30 30 30 30 2d 50 57 52 2d 41 43 00 00
  Address 0x60: 00 00 00 00 00 00 01 30 31 ff ff ff ff ff ff ff
  Address 0x70: ff ff ff dc ff ff ff ff ff ff ff ff ff ff ff ff
Power Supply 1   REV 02   740-049388   1EDL60300KX       Power Supply AC
 Jedec Code:   0x7fb0            EEPROM Version:    0x02
 P/N:          740-049388        S/N:               1EDL60300KX
 Assembly ID:  0x0483            Assembly Version:  01.02
 Date:         01-20-2016        Assembly Flags:    0x00
 Version:      REV 02            CLEI Code:         CMUPADNBAA
 ID: QFX10000 AC                 FRU Model Number:  QFX10000-PWR-AC
 Board Information Record:
  Address 0x00: ff ff ff ff ff ff ff ff ff ff ff ff ff ff ff ff
 I2C Hex Data:
  Address 0x00: 7f b0 02 ff 04 83 01 02 52 45 56 20 30 32 00 00
  Address 0x10: 00 00 00 00 37 34 30 2d 30 34 39 33 38 38 00 00
  Address 0x20: 31 45 44 4c 36 30 33 30 30 4b 58 00 00 14 01 07
  Address 0x30: e0 ff ff ff ff ff ff ff ff ff ff ff ff ff ff ff
  Address 0x40: ff ff ff ff 01 43 4d 55 50 41 44 4e 42 41 41 51
  Address 0x50: 46 58 31 30 30 30 30 2d 50 57 52 2d 41 43 00 00
  Address 0x60: 00 00 00 00 00 00 01 30 31 ff ff ff ff ff ff ff
  Address 0x70: ff ff ff dc ff ff ff ff ff ff ff ff ff ff ff ff
Power Supply 2   REV 02   740-049388   1EDL60300DL       Power Supply AC
 Jedec Code:   0x7fb0            EEPROM Version:    0x02
 P/N:          740-049388        S/N:               1EDL60300DL
 Assembly ID:  0x0483            Assembly Version:  01.02
 Date:         01-20-2016        Assembly Flags:    0x00
 Version:      REV 02            CLEI Code:         CMUPADNBAA
 ID: QFX10000 AC                 FRU Model Number:  QFX10000-PWR-AC
 Board Information Record:
  Address 0x00: ff ff ff ff ff ff ff ff ff ff ff ff ff ff ff ff
 I2C Hex Data:
  Address 0x00: 7f b0 02 ff 04 83 01 02 52 45 56 20 30 32 00 00
  Address 0x10: 00 00 00 00 37 34 30 2d 30 34 39 33 38 38 00 00
  Address 0x20: 31 45 44 4c 36 30 33 30 30 44 4c 00 00 14 01 07
  Address 0x30: e0 ff ff ff ff ff ff ff ff ff ff ff ff ff ff ff
  Address 0x40: ff ff ff ff 01 43 4d 55 50 41 44 4e 42 41 41 51
  Address 0x50: 46 58 31 30 30 30 30 2d 50 57 52 2d 41 43 00 00
```

```
  Address 0x60: 00 00 00 00 00 00 01 30 31 ff ff ff ff ff ff ff
  Address 0x70: ff ff ff dc ff ff ff ff ff ff ff ff ff ff ff ff
Power Supply 3   REV 02   740-049388   1EDL61701BT       Power Supply AC
 Jedec Code:   0x7fb0            EEPROM Version:    0x02
 P/N:          740-049388        S/N:               1EDL61701BT
 Assembly ID:  0x0483            Assembly Version:  01.02
 Date:         05-01-2016        Assembly Flags:    0x00
 Version:      REV 02            CLEI Code:         CMUPADNBAA
 ID: QFX10000 AC                 FRU Model Number:  QFX10000-PWR-AC
 Board Information Record:
  Address 0x00: ff ff ff ff ff ff ff ff ff ff ff ff ff ff ff ff
 I2C Hex Data:
  Address 0x00: 7f b0 02 ff 04 83 01 02 52 45 56 20 30 32 00 00
  Address 0x10: 00 00 00 00 37 34 30 2d 30 34 39 33 38 38 00 00
  Address 0x20: 31 45 44 4c 36 31 37 30 31 42 54 00 00 01 05 07
  Address 0x30: e0 ff ff ff ff ff ff ff ff ff ff ff ff ff ff ff
  Address 0x40: ff ff ff ff 01 43 4d 55 50 41 44 4e 42 41 41 51
  Address 0x50: 46 58 31 30 30 30 30 2d 50 57 52 2d 41 43 00 00
  Address 0x60: 00 00 00 00 00 00 01 30 31 ff ff ff ff ff ff ff
  Address 0x70: ff ff ff dc ff ff ff ff ff ff ff ff ff ff ff ff
Power Supply 4   REV 02   740-049388   1EDL62102P7       Power Supply AC
 Jedec Code:   0x7fb0            EEPROM Version:    0x02
 P/N:          740-049388        S/N:               1EDL62102P7
 Assembly ID:  0x0483            Assembly Version:  01.02
 Date:         05-25-2016        Assembly Flags:    0x00
 Version:      REV 02            CLEI Code:         CMUPADNBAA
 ID: QFX10000 AC                 FRU Model Number:  QFX10000-PWR-AC
 Board Information Record:
  Address 0x00: ff ff ff ff ff ff ff ff ff ff ff ff ff ff ff ff
 I2C Hex Data:
  Address 0x00: 7f b0 02 ff 04 83 01 02 52 45 56 20 30 32 00 00
  Address 0x10: 00 00 00 00 37 34 30 2d 30 34 39 33 38 38 00 00
  Address 0x20: 31 45 44 4c 36 32 31 30 32 50 37 00 00 19 05 07
  Address 0x30: e0 ff ff ff ff ff ff ff ff ff ff ff ff ff ff ff
  Address 0x40: ff ff ff ff 01 43 4d 55 50 41 44 4e 42 41 41 51
  Address 0x50: 46 58 31 30 30 30 30 2d 50 57 52 2d 41 43 00 00
  Address 0x60: 00 00 00 00 00 00 01 30 31 ff ff ff ff ff ff ff
  Address 0x70: ff ff ff dc ff ff ff ff ff ff ff ff ff ff ff ff
Power Supply 5   REV 02   740-049388   1EDL62102PP       Power Supply AC
 Jedec Code:   0x7fb0            EEPROM Version:    0x02
 P/N:          740-049388        S/N:               1EDL62102PP
 Assembly ID:  0x0483            Assembly Version:  01.02
 Date:         05-25-2016        Assembly Flags:    0x00
 Version:      REV 02            CLEI Code:         CMUPADNBAA
 ID: QFX10000 AC                 FRU Model Number:  QFX10000-PWR-AC
 Board Information Record:
  Address 0x00: ff ff ff ff ff ff ff ff ff ff ff ff ff ff ff ff
 I2C Hex Data:
  Address 0x00: 7f b0 02 ff 04 83 01 02 52 45 56 20 30 32 00 00
  Address 0x10: 00 00 00 00 37 34 30 2d 30 34 39 33 38 38 00 00
  Address 0x20: 31 45 44 4c 36 32 31 30 32 50 50 00 00 19 05 07
  Address 0x30: e0 ff ff ff ff ff ff ff ff ff ff ff ff ff ff ff
  Address 0x40: ff ff ff ff 01 43 4d 55 50 41 44 4e 42 41 41 51
  Address 0x50: 46 58 31 30 30 30 30 2d 50 57 52 2d 41 43 00 00
  Address 0x60: 00 00 00 00 00 00 01 30 31 ff ff ff ff ff ff ff
  Address 0x70: ff ff ff dc ff ff ff ff ff ff ff ff ff ff ff ff
FTC 0            REV 14   750-050108   ACPE4038          Fan Controller 8
 Jedec Code:   0x7fb0            EEPROM Version:    0x02
 P/N:          750-050108        S/N:               ACPE4038
 Assembly ID:  0x0bee            Assembly Version:  01.14
 Date:         09-27-2016        Assembly Flags:    0x00
```

```
  Version:      REV 14            CLEI Code:         CMUCAHZCAA
  ID: QFX10000 FTC                FRU Model Number:  QFX10008-FAN-CTRL
  Board Information Record:
   Address 0x00: ff ff ff ff ff ff ff ff ff ff ff ff ff ff ff ff
  I2C Hex Data:
   Address 0x00: 7f b0 02 ff 0b ee 01 0e 52 45 56 20 31 34 00 00
   Address 0x10: 00 00 00 00 37 35 30 2d 30 35 30 31 30 38 00 00
   Address 0x20: 53 2f 4e 20 41 43 50 45 34 30 33 38 00 1b 09 07
   Address 0x30: e0 ff ff ff ff ff ff ff ff ff ff ff ff ff ff ff
   Address 0x40: ff ff ff ff 01 43 4d 55 43 41 48 5a 43 41 41 51
   Address 0x50: 46 58 31 30 30 30 38 2d 46 41 4e 2d 43 54 52 4c
   Address 0x60: 00 00 00 00 00 00 41 44 00 ff ff ff ff ff ff ff
   Address 0x70: ff ff ff 98 ff ff ff ff ff ff ff ff ff ff ff ff
FTC 1            REV 14   750-050108   ACPE4032          Fan Controller 8
  Jedec Code:   0x7fb0            EEPROM Version:    0x02
  P/N:          750-050108        S/N:               ACPE4032
  Assembly ID:  0x0bee            Assembly Version:  01.14
  Date:         09-27-2016        Assembly Flags:    0x00
  Version:      REV 14            CLEI Code:         CMUCAHZCAA
  ID: QFX10000 FTC                FRU Model Number:  QFX10008-FAN-CTRL
  Board Information Record:
   Address 0x00: ff ff ff ff ff ff ff ff ff ff ff ff ff ff ff ff
  I2C Hex Data:
   Address 0x00: 7f b0 02 ff 0b ee 01 0e 52 45 56 20 31 34 00 00
   Address 0x10: 00 00 00 00 37 35 30 2d 30 35 30 31 30 38 00 00
   Address 0x20: 53 2f 4e 20 41 43 50 45 34 30 33 32 00 1b 09 07
   Address 0x30: e0 ff ff ff ff ff ff ff ff ff ff ff ff ff ff ff
   Address 0x40: ff ff ff ff 01 43 4d 55 43 41 48 5a 43 41 41 51
   Address 0x50: 46 58 31 30 30 30 38 2d 46 41 4e 2d 43 54 52 4c
   Address 0x60: 00 00 00 00 00 00 41 44 00 ff ff ff ff ff ff ff
   Address 0x70: ff ff ff 98 ff ff ff ff ff ff ff ff ff ff ff ff
Fan Tray 0       REV 09   760-054372   ACPD6799          Fan Tray 8
  Jedec Code:   0x7fb0            EEPROM Version:    0x02
  P/N:          760-054372        S/N:               ACPD6799
  Assembly ID:  0x0bf0            Assembly Version:  01.09
  Date:         09-28-2016        Assembly Flags:    0x00
  Version:      REV 09            CLEI Code:         CMUCAHYCAA
  ID: QFX10008 FHB                FRU Model Number:  QFX10008-FAN
  Board Information Record:
   Address 0x00: ff ff ff ff ff ff ff ff ff ff ff ff ff ff ff ff
  I2C Hex Data:
   Address 0x00: 7f b0 02 ff 0b f0 01 09 52 45 56 20 30 39 00 00
   Address 0x10: 00 00 00 00 37 36 30 2d 30 35 34 33 37 32 00 00
   Address 0x20: 53 2f 4e 20 41 43 50 44 36 37 39 39 00 1c 09 07
   Address 0x30: e0 ff ff ff ff ff ff ff ff ff ff ff ff ff ff ff
   Address 0x40: ff ff ff ff 01 43 4d 55 43 41 48 59 43 41 41 51
   Address 0x50: 46 58 31 30 30 30 38 2d 46 41 4e 00 00 00 00 00
   Address 0x60: 00 00 00 00 00 00 41 00 00 ff ff ff ff ff ff ff
   Address 0x70: ff ff ff f1 ff ff ff ff ff ff ff ff ff ff ff ff
Fan Tray 1       REV 09   760-054372   ACNZ3584          Fan Tray 8
  Jedec Code:   0x7fb0            EEPROM Version:    0x02
  P/N:          760-054372        S/N:               ACNZ3584
  Assembly ID:  0x0bf0            Assembly Version:  01.09
  Date:         08-30-2016        Assembly Flags:    0x00
  Version:      REV 09            CLEI Code:         CMUCAHYCAA
  ID: QFX10008 FHB                FRU Model Number:  QFX10008-FAN
  Board Information Record:
   Address 0x00: ff ff ff ff ff ff ff ff ff ff ff ff ff ff ff ff
  I2C Hex Data:
   Address 0x00: 7f b0 02 ff 0b f0 01 09 52 45 56 20 30 39 00 00
   Address 0x10: 00 00 00 00 37 36 30 2d 30 35 34 33 37 32 00 00
```

```
  Address 0x20: 53 2f 4e 20 41 43 4e 5a 33 35 38 34 00 1e 08 07
  Address 0x30: e0 ff ff ff ff ff ff ff ff ff ff ff ff ff ff ff
  Address 0x40: ff ff ff ff 01 43 4d 55 43 41 48 59 43 41 41 51
  Address 0x50: 46 58 31 30 30 30 38 2d 46 41 4e 00 00 00 00 00
  Address 0x60: 00 00 00 00 00 00 41 00 00 ff ff ff ff ff ff ff
  Address 0x70: ff ff ff f1 ff ff ff ff ff ff ff ff ff ff ff ff
SIB 0            REV 24   750-050058   ACPD4587          Switch Fabric 8
 Jedec Code:   0x7fb0            EEPROM Version:    0x02
 P/N:          750-050058        S/N:               ACPD4587
 Assembly ID:  0x0bec            Assembly Version:  01.24
 Date:         06-19-2016        Assembly Flags:    0x00
 Version:      REV 24            CLEI Code:         CMUCAH0CAA
 ID: QFX10008 SIB                FRU Model Number:  QFX10008-SF
 Board Information Record:
  Address 0x00: ff ff ff ff ff ff ff ff ff ff ff ff ff ff ff ff
 I2C Hex Data:
  Address 0x00: 7f b0 02 ff 0b ec 01 18 52 45 56 20 32 34 00 00
  Address 0x10: 00 00 00 00 37 35 30 2d 30 35 30 30 35 38 00 00
  Address 0x20: 53 2f 4e 20 41 43 50 44 34 35 38 37 00 13 06 07
  Address 0x30: e0 ff ff ff ff ff ff ff ff ff ff ff ff ff ff ff
  Address 0x40: ff ff ff ff 01 43 4d 55 43 41 48 30 43 41 41 51
  Address 0x50: 46 58 31 30 30 30 38 2d 53 46 00 00 00 00 00 00
  Address 0x60: 00 00 00 00 00 00 41 45 00 ff ff ff ff ff ff ff
  Address 0x70: ff ff ff d1 00 00 00 00 00 00 00 00 00 00 00 00
SIB 1            REV 24   750-050058   ACNZ0635          Switch Fabric 8
 Jedec Code:   0x7fb0            EEPROM Version:    0x02
 P/N:          750-050058        S/N:               ACNZ0635
 Assembly ID:  0x0bec            Assembly Version:  01.24
 Date:         06-06-2016        Assembly Flags:    0x00
 Version:      REV 24            CLEI Code:         CMUCAH0CAA
 ID: QFX10008 SIB                FRU Model Number:  QFX10008-SF
 Board Information Record:
  Address 0x00: ff ff ff ff ff ff ff ff ff ff ff ff ff ff ff ff
 I2C Hex Data:
  Address 0x00: 7f b0 02 ff 0b ec 01 18 52 45 56 20 32 34 00 00
  Address 0x10: 00 00 00 00 37 35 30 2d 30 35 30 30 35 38 00 00
  Address 0x20: 53 2f 4e 20 41 43 4e 5a 30 36 33 35 00 06 06 07
  Address 0x30: e0 ff ff ff ff ff ff ff ff ff ff ff ff ff ff ff
  Address 0x40: ff ff ff ff 01 43 4d 55 43 41 48 30 43 41 41 51
  Address 0x50: 46 58 31 30 30 30 38 2d 53 46 00 00 00 00 00 00
  Address 0x60: 00 00 00 00 00 00 41 45 00 ff ff ff ff ff ff ff
  Address 0x70: ff ff ff d1 00 00 00 00 00 00 00 00 00 00 00 00
SIB 2            REV 24   750-050058   ACPD4908          Switch Fabric 8
 Jedec Code:   0x7fb0            EEPROM Version:    0x02
 P/N:          750-050058        S/N:               ACPD4908
 Assembly ID:  0x0bec            Assembly Version:  01.24
 Date:         07-12-2016        Assembly Flags:    0x00
 Version:      REV 24            CLEI Code:         CMUCAH0CAA
 ID: QFX10008 SIB                FRU Model Number:  QFX10008-SF
 Board Information Record:
  Address 0x00: ff ff ff ff ff ff ff ff ff ff ff ff ff ff ff ff
 I2C Hex Data:
  Address 0x00: 7f b0 02 ff 0b ec 01 18 52 45 56 20 32 34 00 00
  Address 0x10: 00 00 00 00 37 35 30 2d 30 35 30 30 35 38 00 00
  Address 0x20: 53 2f 4e 20 41 43 50 44 34 39 30 38 00 0c 07 07
  Address 0x30: e0 ff ff ff ff ff ff ff ff ff ff ff ff ff ff ff
  Address 0x40: ff ff ff ff 01 43 4d 55 43 41 48 30 43 41 41 51
  Address 0x50: 46 58 31 30 30 30 38 2d 53 46 00 00 00 00 00 00
  Address 0x60: 00 00 00 00 00 00 41 45 00 ff ff ff ff ff ff ff
  Address 0x70: ff ff ff d1 00 00 00 00 00 00 00 00 00 00 00 00
SIB 3            REV 24   750-050058   ACNZ0617          Switch Fabric 8
```

```
  Jedec Code:   0x7fb0            EEPROM Version:    0x02
  P/N:          750-050058        S/N:               ACNZ0617
  Assembly ID:  0x0bec            Assembly Version:  01.24
  Date:         06-07-2016        Assembly Flags:    0x00
  Version:      REV 24            CLEI Code:         CMUCAH0CAA
  ID: QFX10008 SIB                FRU Model Number:  QFX10008-SF
  Board Information Record:
   Address 0x00: ff ff ff ff ff ff ff ff ff ff ff ff ff ff ff ff
  I2C Hex Data:
   Address 0x00: 7f b0 02 ff 0b ec 01 18 52 45 56 20 32 34 00 00
   Address 0x10: 00 00 00 00 37 35 30 2d 30 35 30 30 35 38 00 00
   Address 0x20: 53 2f 4e 20 41 43 4e 5a 30 36 31 37 00 07 06 07
   Address 0x30: e0 ff ff ff ff ff ff ff ff ff ff ff ff ff ff ff
   Address 0x40: ff ff ff ff 01 43 4d 55 43 41 48 30 43 41 41 51
   Address 0x50: 46 58 31 30 30 30 38 2d 53 46 00 00 00 00 00 00
   Address 0x60: 00 00 00 00 00 00 41 45 00 ff ff ff ff ff ff ff
   Address 0x70: ff ff ff d1 00 00 00 00 00 00 00 00 00 00 00 00
SIB 4            REV 24   750-050058   ACNZ0527          Switch Fabric 8
  Jedec Code:   0x7fb0            EEPROM Version:    0x02
  P/N:          750-050058        S/N:               ACNZ0527
  Assembly ID:  0x0bec            Assembly Version:  01.24
  Date:         06-06-2016        Assembly Flags:    0x00
  Version:      REV 24            CLEI Code:         CMUCAH0CAA
  ID: QFX10008 SIB                FRU Model Number:  QFX10008-SF
  Board Information Record:
   Address 0x00: ff ff ff ff ff ff ff ff ff ff ff ff ff ff ff ff
  I2C Hex Data:
   Address 0x00: 7f b0 02 ff 0b ec 01 18 52 45 56 20 32 34 00 00
   Address 0x10: 00 00 00 00 37 35 30 2d 30 35 30 30 35 38 00 00
   Address 0x20: 53 2f 4e 20 41 43 4e 5a 30 35 32 37 00 06 06 07
   Address 0x30: e0 ff ff ff ff ff ff ff ff ff ff ff ff ff ff ff
   Address 0x40: ff ff ff ff 01 43 4d 55 43 41 48 30 43 41 41 51
   Address 0x50: 46 58 31 30 30 30 38 2d 53 46 00 00 00 00 00 00
   Address 0x60: 00 00 00 00 00 00 41 45 00 ff ff ff ff ff ff ff
   Address 0x70: ff ff ff d1 00 00 00 00 00 00 00 00 00 00 00 00
SIB 5            REV 23   750-050058   ACNX6980          Switch Fabric 8
  Jedec Code:   0x7fb0            EEPROM Version:    0x02
  P/N:          750-050058        S/N:               ACNX6980
  Assembly ID:  0x0bec            Assembly Version:  01.23
  Date:         05-16-2016        Assembly Flags:    0x00
  Version:      REV 23            CLEI Code:         CMUCAH0CAA
  ID: QFX10008 SIB                FRU Model Number:  QFX10008-SF
  Board Information Record:
   Address 0x00: ff ff ff ff ff ff ff ff ff ff ff ff ff ff ff ff
  I2C Hex Data:
   Address 0x00: 7f b0 02 ff 0b ec 01 17 52 45 56 20 32 33 00 00
   Address 0x10: 00 00 00 00 37 35 30 2d 30 35 30 30 35 38 00 00
   Address 0x20: 53 2f 4e 20 41 43 4e 58 36 39 38 30 00 10 05 07
   Address 0x30: e0 ff ff ff ff ff ff ff ff ff ff ff ff ff ff ff
   Address 0x40: ff ff ff ff 01 43 4d 55 43 41 48 30 43 41 41 51
   Address 0x50: 46 58 31 30 30 30 38 2d 53 46 00 00 00 00 00 00
   Address 0x60: 00 00 00 00 00 00 41 42 00 ff ff ff ff ff ff ff
   Address 0x70: ff ff ff ce 00 00 00 00 00 00 00 00 00 00 00 00
```

show chassis hardware extensive (PTX10016 Router)

```
user@host> show chassis hardware extensive

Hardware inventory:
Item             Version  Part number  Serial number     Description
Chassis                                DH995             JNP10016 [PTX10016]
```

```
 Jedec Code:   0x7fb0            EEPROM Version:    0x02
                                 S/N:               DH995
 Assembly ID:  0x0566            Assembly Version:  01.22
 Date:         02-16-2017        Assembly Flags:    0x00
                                 CLEI Code:         CMMUN00ARA
 ID: JNP10016                    FRU Model Number:  QFX10016-CHAS
 Board Information Record:
  Address 0x00: ad 01 10 00 44 aa 50 ab 1b b6 ff ff ff ff ff ff
 I2C Hex Data:
  Address 0x00: 7f b0 02 ff 05 66 01 16 00 45 56 20 32 32 00 00
  Address 0x10: 00 00 00 00 00 35 30 2d 30 35 36 35 35 35 00 00
  Address 0x20: 44 48 39 39 35 00 00 00 00 00 00 00 00 10 02 07
  Address 0x30: e1 ff ff ff ad 01 10 00 44 aa 50 ab 1b b6 ff ff
  Address 0x40: ff ff ff ff 01 43 4d 4d 55 4e 30 30 41 52 41 51
  Address 0x50: 46 58 31 30 30 31 36 2d 43 48 41 53 00 00 00 00
  Address 0x60: 00 00 00 00 00 00 32 41 00 ff ff ff ff ff ff ff
  Address 0x70: ff ff ff 51 44 48 39 39 35 00 00 00 00 00 00 00
Midplane         REV 22   750-056555   ACPM7810          Midplane 16
 Jedec Code:   0x7fb0            EEPROM Version:    0x02
 P/N:          750-056555        S/N:               ACPM7810
 Assembly ID:  0x0be4            Assembly Version:  01.22
 Date:         02-16-2017        Assembly Flags:    0x00
 Version:      REV 22            CLEI Code:         CMMUN00ARA
 ID: QFX10016 Midplane           FRU Model Number:  QFX10016-CHAS
 Board Information Record:
  Address 0x00: ad 01 10 00 44 aa 50 ab 1b b6 ff ff ff ff ff ff
 I2C Hex Data:
  Address 0x00: 7f b0 02 ff 0b e4 01 16 52 45 56 20 32 32 00 00
  Address 0x10: 00 00 00 00 37 35 30 2d 30 35 36 35 35 35 00 00
  Address 0x20: 53 2f 4e 20 41 43 50 4d 37 38 31 30 00 10 02 07
  Address 0x30: e1 ff ff ff ad 01 10 00 44 aa 50 ab 1b b6 ff ff
  Address 0x40: ff ff ff ff 01 43 4d 4d 55 4e 30 30 41 52 41 51
  Address 0x50: 46 58 31 30 30 31 36 2d 43 48 41 53 00 00 00 00
  Address 0x60: 00 00 00 00 00 00 32 41 00 ff ff ff ff ff ff ff
  Address 0x70: ff ff ff 51 44 48 39 39 35 00 00 00 00 00 00 00
Routing Engine 0          BUILTIN      BUILTIN           RE-PTX-2X00x4
  vtbd0 15360 MB                                         Virtio Block Disk
  vtbd1 15360 MB                                         Virtio Block Disk
  ada0    128 MB  QEMU                 QM00002           Virtio Block Disk
  usb0 (addr 0.1) EHCI root HUB 0      Intel             uhub0
  usb1 (addr 0.2) product 0x0020 32    vendor 0x8087     uhub1
Routing Engine 1          BUILTIN      BUILTIN           RE-PTX-2X00x4
  vtbd0 15360 MB                                         Virtio Block Disk
  vtbd1 15360 MB                                         Virtio Block Disk
  ada0    128 MB  QEMU                 QM00002           Virtio Block Disk
  usb0 (addr 0.1) EHCI root HUB 0      Intel             uhub0
  usb1 (addr 0.2) product 0x0020 32    vendor 0x8087     uhub1
CB 0             REV 03   750-068820   ACPL7238          Control Board
 Jedec Code:   0x7fb0            EEPROM Version:    0x02
 P/N:          750-068820        S/N:               ACPL7238
 Assembly ID:  0x0b9d            Assembly Version:  01.03
 Date:         03-15-2017        Assembly Flags:    0x00
 Version:      REV 03            CLEI Code:         CMUCAH3CTB
 ID: Control Board               FRU Model Number:  QFX10000-RE
 Board Information Record:
  Address 0x00: ad 01 00 10 e8 b6 c2 46 aa 29 ff ff ff ff ff ff
 I2C Hex Data:
  Address 0x00: 7f b0 02 ff 0b 9d 01 03 52 45 56 20 30 33 00 00
  Address 0x10: 00 00 00 00 37 35 30 2d 30 36 38 38 32 30 00 00
  Address 0x20: 53 2f 4e 20 41 43 50 4c 37 32 33 38 00 0f 03 07
  Address 0x30: e1 ff ff ff ad 01 00 10 e8 b6 c2 46 aa 29 ff ff
```

```
  Address 0x40: ff ff ff ff 01 43 4d 55 43 41 48 33 43 54 42 51
  Address 0x50: 46 58 31 30 30 30 30 2d 52 45 00 00 00 00 00 00
  Address 0x60: 00 00 00 00 00 00 42 41 00 ff ff ff ff ff ff ff
  Address 0x70: ff ff ff db ff ff ff ff ff ff ff ff ff ff ff ff
CB 1             REV 03   750-068820   ACPL7298          Control Board
 Jedec Code:   0x7fb0            EEPROM Version:    0x02
 P/N:          750-068820        S/N:               ACPL7298
 Assembly ID:  0x0b9d            Assembly Version:  01.03
 Date:         03-15-2017        Assembly Flags:    0x00
 Version:      REV 03            CLEI Code:         CMUCAH3CTB
 ID: Control Board               FRU Model Number:  QFX10000-RE
 Board Information Record:
  Address 0x00: ad 01 00 10 e8 b6 c2 46 99 b9 ff ff ff ff ff ff
 I2C Hex Data:
  Address 0x00: 7f b0 02 ff 0b 9d 01 03 52 45 56 20 30 33 00 00
  Address 0x10: 00 00 00 00 37 35 30 2d 30 36 38 38 32 30 00 00
  Address 0x20: 53 2f 4e 20 41 43 50 4c 37 32 39 38 00 0f 03 07
  Address 0x30: e1 ff ff ff ad 01 00 10 e8 b6 c2 46 99 b9 ff ff
  Address 0x40: ff ff ff ff 01 43 4d 55 43 41 48 33 43 54 42 51
  Address 0x50: 46 58 31 30 30 30 30 2d 52 45 00 00 00 00 00 00
  Address 0x60: 00 00 00 00 00 00 42 41 00 ff ff ff ff ff ff ff
  Address 0x70: ff ff ff db ff ff ff ff ff ff ff ff ff ff ff ff
FPC 1            REV 36   750-077140   ACNP4590          LC1102 - 12C / 36Q /
144X
 Jedec Code:   0x7fb0            EEPROM Version:    0x02
 P/N:          750-077140        S/N:               ACNP4590
 Assembly ID:  0x0be7            Assembly Version:  01.36
 Date:         10-17-2016        Assembly Flags:    0x00
 Version:      REV 36            CLEI Code:         CMUIAM9BAA
 ID: ULC-36Q-12Q28               FRU Model Number:  QFX10000-36Q
 Board Information Record:
  Address 0x00: ff ff ff ff ff ff ff ff ff ff ff ff ff ff ff ff
 I2C Hex Data:
  Address 0x00: 7f b0 02 ff 0b e7 01 24 52 45 56 20 33 36 00 00
  Address 0x10: 00 00 00 00 37 35 30 2d 30 37 37 31 34 30 00 00
  Address 0x20: 53 2f 4e 20 41 43 4e 50 34 35 39 30 00 11 0a 07
  Address 0x30: e0 ff ff ff ff ff ff ff ff ff ff ff ff ff ff ff
  Address 0x40: ff ff ff ff 01 43 4d 55 49 41 4d 39 42 41 41 51
  Address 0x50: 46 58 31 30 30 30 30 2d 33 36 51 00 00 00 00 00
  Address 0x60: 00 00 00 00 00 00 42 45 00 ff ff ff ff ff ff ff
  Address 0x70: ff ff ff fe ff ff ff ff ff ff ff ff ff ff ff ff
  CPU                     BUILTIN      BUILTIN           FPC CPU
 Jedec Code:   0x7fb0            EEPROM Version:    0x02
 P/N:          BUILTIN           S/N:               BUILTIN
 Assembly ID:  0xf020            Assembly Version:  02.17
 Date:         04-19-2012        Assembly Flags:    0x00
 Board Information Record:
  Address 0x00: ad 01 01 04 ac 4b c8 1d f7 b6 ff ff ff ff ff ff
 I2C Hex Data:
  Address 0x00: 7f b0 02 ff f0 20 02 11 00 40 36 bd 09 40 25 32
  Address 0x10: 09 e8 ba ff 42 55 49 4c 54 49 4e 00 00 40 36 bd
  Address 0x20: 42 55 49 4c 54 49 4e 00 42 55 49 4c 00 13 04 07
  Address 0x30: dc ff ff ff ad 01 01 04 ac 4b c8 1d f7 b6 ff ff
  Address 0x40: ff ff ff ff 00 00 00 00 00 00 00 00 00 00 00 00
  Address 0x50: 00 00 00 00 00 00 00 00 00 00 00 00 00 00 00 00
  Address 0x60: 00 00 00 00 00 00 45 00 00 ff ff ff ff ff ff ff
  Address 0x70: ff ff ff f3 50 36 36 36 36 00 00 00 00 00 00 00
  PIC 0                  BUILTIN      BUILTIN          12x100GE/36x40GE/144x10GE

 Jedec Code:   0x7fb0            EEPROM Version:    0x02
 P/N:          BUILTIN           S/N:               BUILTIN
```

```
 Assembly ID:  0xf050            Assembly Version:  02.17
 Date:         04-19-2012        Assembly Flags:    0x00
 Board Information Record:
  Address 0x00: ad 01 01 04 ac 4b c8 1d f7 b6 ff ff ff ff ff ff
 I2C Hex Data:
  Address 0x00: 7f b0 02 ff f0 50 02 11 00 00 00 00 07 0a 20 45
  Address 0x10: 6c 61 70 73 42 55 49 4c 54 49 4e 00 25 73 3a 20
  Address 0x20: 42 55 49 4c 54 49 4e 00 25 73 3a 20 00 13 04 07
  Address 0x30: dc ff ff ff ad 01 01 04 ac 4b c8 1d f7 b6 ff ff
  Address 0x40: ff ff ff ff 01 00 00 00 00 00 00 00 00 00 00 00
  Address 0x50: 00 00 00 00 00 00 00 00 00 00 00 00 00 00 00 00
  Address 0x60: 00 00 00 00 00 00 45 00 00 ff ff ff ff ff ff ff
  Address 0x70: ff ff ff f3 55 55 55 55 55 55 55 55 55 55 55 55
    Xcvr 0       REV 01   740-054053   QF3600AV          QSFP+-4X10G-SR
    Xcvr 35      REV 01   740-061405   1ACQ110507K       QSFP-100GBASE-SR4
FPC 3            REV 07   750-071975   CAHA2224          LC1102 - 12C / 36Q /
144X
 Jedec Code:   0x7fb0            EEPROM Version:    0x02
 P/N:          750-071975        S/N:               CAHA2224
 Assembly ID:  0x0be7            Assembly Version:  01.07
 Date:         01-17-2017        Assembly Flags:    0x00
 Version:      REV 07            CLEI Code:         PROTOXCLEI
 ID: ULC-36Q-12Q28               FRU Model Number:  PROTO-ASSEMBLY
 Board Information Record:
  Address 0x00: ff ff ff ff ff ff ff ff ff ff ff ff ff ff ff ff
 I2C Hex Data:
  Address 0x00: 7f b0 02 ff 0b e7 01 07 52 45 56 20 30 37 00 00
  Address 0x10: 00 00 00 00 37 35 30 2d 30 37 31 39 37 35 00 00
  Address 0x20: 53 2f 4e 20 43 41 48 41 32 32 32 34 00 11 01 07
  Address 0x30: e1 ff ff ff ff ff ff ff ff ff ff ff ff ff ff ff
  Address 0x40: ff ff ff ff 01 50 52 4f 54 4f 58 43 4c 45 49 50
  Address 0x50: 52 4f 54 4f 2d 41 53 53 45 4d 42 4c 59 00 00 00
  Address 0x60: 00 00 00 00 00 00 41 30 30 ff ff ff ff ff ff ff
  Address 0x70: ff ff ff c2 ff ff ff ff ff ff ff ff ff ff ff ff
  CPU                     BUILTIN      BUILTIN           FPC CPU
 Jedec Code:   0x7fb0            EEPROM Version:    0x02
 P/N:          BUILTIN           S/N:               BUILTIN
 Assembly ID:  0xf020            Assembly Version:  02.17
 Date:         04-19-2012        Assembly Flags:    0x00
 Board Information Record:
  Address 0x00: ad 01 01 04 ac 4b c8 1d f7 b6 ff ff ff ff ff ff
 I2C Hex Data:
  Address 0x00: 7f b0 02 ff f0 20 02 11 00 60 b6 be 09 c0 cf 38
  Address 0x10: 09 e8 ba ff 42 55 49 4c 54 49 4e 00 00 60 b6 be
  Address 0x20: 42 55 49 4c 54 49 4e 00 42 55 49 4c 00 13 04 07
  Address 0x30: dc ff ff ff ad 01 01 04 ac 4b c8 1d f7 b6 ff ff
  Address 0x40: ff ff ff ff 00 00 00 00 00 00 00 00 00 00 00 00
  Address 0x50: 00 00 00 00 00 00 00 00 00 00 00 00 00 00 00 00
  Address 0x60: 00 00 00 00 00 00 45 00 00 ff ff ff ff ff ff ff
  Address 0x70: ff ff ff f3 50 36 36 36 36 00 00 00 00 00 00 00
  PIC 0                  BUILTIN      BUILTIN           12x100GE/36x40GE/144x10GE

 Jedec Code:   0x7fb0            EEPROM Version:    0x02
 P/N:          BUILTIN           S/N:               BUILTIN
 Assembly ID:  0xf050            Assembly Version:  02.17
 Date:         04-19-2012        Assembly Flags:    0x00
 Board Information Record:
  Address 0x00: ad 01 01 04 ac 4b c8 1d f7 b6 ff ff ff ff ff ff
 I2C Hex Data:
  Address 0x00: 7f b0 02 ff f0 50 02 11 00 00 00 00 07 0a 20 45
  Address 0x10: 6c 61 70 73 42 55 49 4c 54 49 4e 00 25 73 3a 20
```

```
  Address 0x20: 42 55 49 4c 54 49 4e 00 25 73 3a 20 00 13 04 07
  Address 0x30: dc ff ff ff ad 01 01 04 ac 4b c8 1d f7 b6 ff ff
  Address 0x40: ff ff ff ff 01 00 00 00 00 00 00 00 00 00 00 00
  Address 0x50: 00 00 00 00 00 00 00 00 00 00 00 00 00 00 00 00
  Address 0x60: 00 00 00 00 00 00 45 00 00 ff ff ff ff ff ff ff
  Address 0x70: ff ff ff f3 55 55 55 55 55 55 55 55 55 55 55 55
    Xcvr 0       REV 01   740-054053   QG1505YM          QSFP+-4X10G-SR
    Xcvr 11               NON-JNPR     GDA2017459        QSFP-100GBASE-LR4
    Xcvr 35               NON-JNPR     GDF2008750        QSFP-100GBASE-LR4
FPC 5            REV 13   750-068822   ACPD6501          LC1102 - 12C / 36Q /
144X
 Jedec Code:   0x7fb0            EEPROM Version:    0x02
 P/N:          750-068822        S/N:               ACPD6501
 Assembly ID:  0x0be7            Assembly Version:  01.13
 Date:         06-29-2017        Assembly Flags:    0x00
 Version:      REV 13            CLEI Code:         CMUIAM9BAC
 ID: ULC-36Q-12Q28               FRU Model Number:  QFX10000-36Q
 Board Information Record:
  Address 0x00: ff ff ff ff ff ff ff ff ff ff ff ff ff ff ff ff
 I2C Hex Data:
  Address 0x00: 7f b0 02 ff 0b e7 01 0d 52 45 56 20 31 33 00 00
  Address 0x10: 00 00 00 00 37 35 30 2d 30 36 38 38 32 32 00 00
  Address 0x20: 53 2f 4e 20 41 43 50 44 36 35 30 31 00 1d 06 07
  Address 0x30: e1 ff ff ff ff ff ff ff ff ff ff ff ff ff ff ff
  Address 0x40: ff ff ff ff 01 43 4d 55 49 41 4d 39 42 41 43 51
  Address 0x50: 46 58 31 30 30 30 30 2d 33 36 51 00 00 00 00 00
  Address 0x60: 00 00 00 00 00 00 43 41 00 ff ff ff ff ff ff ff
  Address 0x70: ff ff ff fd ff ff ff ff ff ff ff ff ff ff ff ff
  CPU                     BUILTIN      BUILTIN           FPC CPU
 Jedec Code:   0x7fb0            EEPROM Version:    0x02
 P/N:          BUILTIN           S/N:               BUILTIN
 Assembly ID:  0xf020            Assembly Version:  02.17
 Date:         04-19-2012        Assembly Flags:    0x00
 Board Information Record:
  Address 0x00: ad 01 01 04 ac 4b c8 1d f7 b6 ff ff ff ff ff ff
 I2C Hex Data:
  Address 0x00: 7f b0 02 ff f0 20 02 11 00 c0 c6 bc 09 c0 ca 40
  Address 0x10: 09 e8 ba ff 42 55 49 4c 54 49 4e 00 00 c0 c6 bc
  Address 0x20: 42 55 49 4c 54 49 4e 00 42 55 49 4c 00 13 04 07
  Address 0x30: dc ff ff ff ad 01 01 04 ac 4b c8 1d f7 b6 ff ff
  Address 0x40: ff ff ff ff 00 00 00 00 00 00 00 00 00 00 00 00
  Address 0x50: 00 00 00 00 00 00 00 00 00 00 00 00 00 00 00 00
  Address 0x60: 00 00 00 00 00 00 45 00 00 ff ff ff ff ff ff ff
  Address 0x70: ff ff ff f3 50 36 36 36 36 00 00 00 00 00 00 00
  PIC 0                  BUILTIN      BUILTIN          12x100GE/36x40GE/144x10GE

 Jedec Code:   0x7fb0            EEPROM Version:    0x02
 P/N:          BUILTIN           S/N:               BUILTIN
 Assembly ID:  0xf050            Assembly Version:  02.17
 Date:         04-19-2012        Assembly Flags:    0x00
 Board Information Record:
  Address 0x00: ad 01 01 04 ac 4b c8 1d f7 b6 ff ff ff ff ff ff
 I2C Hex Data:
  Address 0x00: 7f b0 02 ff f0 50 02 11 00 00 00 00 07 0a 20 45
  Address 0x10: 6c 61 70 73 42 55 49 4c 54 49 4e 00 25 73 3a 20
  Address 0x20: 42 55 49 4c 54 49 4e 00 25 73 3a 20 00 13 04 07
  Address 0x30: dc ff ff ff ad 01 01 04 ac 4b c8 1d f7 b6 ff ff
  Address 0x40: ff ff ff ff 01 00 00 00 00 00 00 00 00 00 00 00
  Address 0x50: 00 00 00 00 00 00 00 00 00 00 00 00 00 00 00 00
  Address 0x60: 00 00 00 00 00 00 45 00 00 ff ff ff ff ff ff ff
  Address 0x70: ff ff ff f3 55 55 55 55 55 55 55 55 55 55 55 55
```

```
    Xcvr 1       REV 01   740-058734   1ECQ11381LA       QSFP-100GBASE-SR4
    Xcvr 2       REV 01   740-043308   UWH141S           QSFP+-40G-LR4
    Xcvr 3       REV 01   740-043308   UWE2CG9           QSFP+-40G-LR4
FPC 6            REV 37   750-077140   ACNS2793          LC1102 - 12C / 36Q /
144X
 Jedec Code:   0x7fb0            EEPROM Version:    0x02
 P/N:          750-077140        S/N:               ACNS2793
 Assembly ID:  0x0be7            Assembly Version:  01.37
 Date:         03-25-2017        Assembly Flags:    0x00
 Version:      REV 37            CLEI Code:         CMUIAM9BAA
 ID: ULC-36Q-12Q28               FRU Model Number:  QFX10000-36Q
 Board Information Record:
  Address 0x00: ff ff ff ff ff ff ff ff ff ff ff ff ff ff ff ff
 I2C Hex Data:
  Address 0x00: 7f b0 02 ff 0b e7 01 25 52 45 56 20 33 37 00 00
  Address 0x10: 00 00 00 00 37 35 30 2d 30 37 37 31 34 30 00 00
  Address 0x20: 53 2f 4e 20 41 43 4e 53 32 37 39 33 00 19 03 07
  Address 0x30: e1 ff ff ff ff ff ff ff ff ff ff ff ff ff ff ff
  Address 0x40: ff ff ff ff 01 43 4d 55 49 41 4d 39 42 41 41 51
  Address 0x50: 46 58 31 30 30 30 30 2d 33 36 51 00 00 00 00 00
  Address 0x60: 00 00 00 00 00 00 42 45 00 ff ff ff ff ff ff ff
  Address 0x70: ff ff ff fe ff ff ff ff ff ff ff ff ff ff ff ff
  CPU                     BUILTIN      BUILTIN           FPC CPU
 Jedec Code:   0x7fb0            EEPROM Version:    0x02
 P/N:          BUILTIN           S/N:               BUILTIN
 Assembly ID:  0xf020            Assembly Version:  02.17
 Date:         04-19-2012        Assembly Flags:    0x00
 Board Information Record:
  Address 0x00: ad 01 01 04 ac 4b c8 1d f7 b6 ff ff ff ff ff ff
 I2C Hex Data:
  Address 0x00: 7f b0 02 ff f0 20 02 11 00 a0 e6 d4 09 00 bd 43
  Address 0x10: 09 e8 ba ff 42 55 49 4c 54 49 4e 00 00 a0 e6 d4
  Address 0x20: 42 55 49 4c 54 49 4e 00 42 55 49 4c 00 13 04 07
  Address 0x30: dc ff ff ff ad 01 01 04 ac 4b c8 1d f7 b6 ff ff
  Address 0x40: ff ff ff ff 00 00 00 00 00 00 00 00 00 00 00 00
  Address 0x50: 00 00 00 00 00 00 00 00 00 00 00 00 00 00 00 00
  Address 0x60: 00 00 00 00 00 00 45 00 00 ff ff ff ff ff ff ff
  Address 0x70: ff ff ff f3 50 36 36 36 36 00 00 00 00 00 00 00
  PIC 0                  BUILTIN      BUILTIN          12x100GE/36x40GE/144x10GE

 Jedec Code:   0x7fb0            EEPROM Version:    0x02
 P/N:          BUILTIN           S/N:               BUILTIN
 Assembly ID:  0xf050            Assembly Version:  02.17
 Date:         04-19-2012        Assembly Flags:    0x00
 Board Information Record:
  Address 0x00: ad 01 01 04 ac 4b c8 1d f7 b6 ff ff ff ff ff ff
 I2C Hex Data:
  Address 0x00: 7f b0 02 ff f0 50 02 11 00 00 00 00 07 0a 20 45
  Address 0x10: 6c 61 70 73 42 55 49 4c 54 49 4e 00 25 73 3a 20
  Address 0x20: 42 55 49 4c 54 49 4e 00 25 73 3a 20 00 13 04 07
  Address 0x30: dc ff ff ff ad 01 01 04 ac 4b c8 1d f7 b6 ff ff
  Address 0x40: ff ff ff ff 01 00 00 00 00 00 00 00 00 00 00 00
  Address 0x50: 00 00 00 00 00 00 00 00 00 00 00 00 00 00 00 00
  Address 0x60: 00 00 00 00 00 00 45 00 00 ff ff ff ff ff ff ff
  Address 0x70: ff ff ff f3 55 55 55 55 55 55 55 55 55 55 55 55
    Xcvr 0       REV 01   740-032986   QH0400VH          QSFP+-40G-SR4
    Xcvr 1       REV 01   740-032986   QH0400VM          QSFP+-40G-SR4
    Xcvr 35      REV 01   740-058734   1ECQ11390ZB       QSFP-100GBASE-SR4
FPC 8            REV 36   750-077140   ACNP4625          LC1102 - 12C / 36Q /
144X
 Jedec Code:   0x7fb0            EEPROM Version:    0x02
```

```
  P/N:          750-077140        S/N:               ACNP4625
  Assembly ID:  0x0be7            Assembly Version:  01.36
  Date:         10-17-2016        Assembly Flags:    0x00
  Version:      REV 36            CLEI Code:         CMUIAM9BAA
  ID: ULC-36Q-12Q28               FRU Model Number:  QFX10000-36Q
  Board Information Record:
   Address 0x00: ff ff ff ff ff ff ff ff ff ff ff ff ff ff ff ff
  I2C Hex Data:
   Address 0x00: 7f b0 02 ff 0b e7 01 24 52 45 56 20 33 36 00 00
   Address 0x10: 00 00 00 00 37 35 30 2d 30 37 37 31 34 30 00 00
   Address 0x20: 53 2f 4e 20 41 43 4e 50 34 36 32 35 00 11 0a 07
   Address 0x30: e0 ff ff ff ff ff ff ff ff ff ff ff ff ff ff ff
   Address 0x40: ff ff ff ff 01 43 4d 55 49 41 4d 39 42 41 41 51
   Address 0x50: 46 58 31 30 30 30 30 2d 33 36 51 00 00 00 00 00
   Address 0x60: 00 00 00 00 00 00 42 45 00 ff ff ff ff ff ff ff
   Address 0x70: ff ff ff fe ff ff ff ff ff ff ff ff ff ff ff ff
   CPU                     BUILTIN      BUILTIN           FPC CPU
  Jedec Code:   0x7fb0            EEPROM Version:    0x02
  P/N:          BUILTIN           S/N:               BUILTIN
  Assembly ID:  0xf020            Assembly Version:  02.17
  Date:         04-19-2012        Assembly Flags:    0x00
  Board Information Record:
   Address 0x00: ad 01 01 04 ac 4b c8 1d f7 b6 ff ff ff ff ff ff
  I2C Hex Data:
   Address 0x00: 7f b0 02 ff f0 20 02 11 00 c0 e6 d4 09 40 59 4a
   Address 0x10: 09 e8 ba ff 42 55 49 4c 54 49 4e 00 00 c0 e6 d4
   Address 0x20: 42 55 49 4c 54 49 4e 00 42 55 49 4c 00 13 04 07
   Address 0x30: dc ff ff ff ad 01 01 04 ac 4b c8 1d f7 b6 ff ff
   Address 0x40: ff ff ff ff 00 00 00 00 00 00 00 00 00 00 00 00
   Address 0x50: 00 00 00 00 00 00 00 00 00 00 00 00 00 00 00 00
   Address 0x60: 00 00 00 00 00 00 45 00 00 ff ff ff ff ff ff ff
   Address 0x70: ff ff ff f3 50 36 36 36 36 00 00 00 00 00 00 00
   PIC 0                  BUILTIN      BUILTIN          12x100GE/36x40GE/144x10GE

  Jedec Code:   0x7fb0            EEPROM Version:    0x02
  P/N:          BUILTIN           S/N:               BUILTIN
  Assembly ID:  0xf050            Assembly Version:  02.17
  Date:         04-19-2012        Assembly Flags:    0x00
  Board Information Record:
   Address 0x00: ad 01 01 04 ac 4b c8 1d f7 b6 ff ff ff ff ff ff
  I2C Hex Data:
   Address 0x00: 7f b0 02 ff f0 50 02 11 00 00 00 00 07 0a 20 45
   Address 0x10: 6c 61 70 73 42 55 49 4c 54 49 4e 00 25 73 3a 20
   Address 0x20: 42 55 49 4c 54 49 4e 00 25 73 3a 20 00 13 04 07
   Address 0x30: dc ff ff ff ad 01 01 04 ac 4b c8 1d f7 b6 ff ff
   Address 0x40: ff ff ff ff 01 00 00 00 00 00 00 00 00 00 00 00
   Address 0x50: 00 00 00 00 00 00 00 00 00 00 00 00 00 00 00 00
   Address 0x60: 00 00 00 00 00 00 45 00 00 ff ff ff ff ff ff ff
   Address 0x70: ff ff ff f3 55 55 55 55 55 55 55 55 55 55 55 55
     Xcvr 1       REV 01   740-058732   1AMQA14206D       QSFP-100GBASE-LR4
     Xcvr 10      REV 01   740-032986   QF4301KB          QSFP+-40G-SR4
     Xcvr 24      REV 01   740-054050   INFAJ0492244      QSFP+-4X10G-LR
FPC 9            REV 35   750-071976   ACPD3055          LC1101 - 30C / 30Q / 96X

  Jedec Code:   0x7fb0            EEPROM Version:    0x02
  P/N:          750-071976        S/N:               ACPD3055
  Assembly ID:  0x0be8            Assembly Version:  01.35
  Date:         05-26-2016        Assembly Flags:    0x00
  Version:      REV 35            CLEI Code:         CMUIANABAA
  ID: ULC-30Q28                   FRU Model Number:  JNP10K-LC1101
  Board Information Record:
```

```
  Address 0x00: ff ff ff ff ff ff ff ff ff ff ff ff ff ff ff ff
 I2C Hex Data:
  Address 0x00: 7f b0 02 ff 0b e8 01 23 52 45 56 20 33 35 00 00
  Address 0x10: 00 00 00 00 37 35 30 2d 30 37 31 39 37 36 00 00
  Address 0x20: 53 2f 4e 20 41 43 50 44 33 30 35 35 00 1a 05 07
  Address 0x30: e0 ff ff ff ff ff ff ff ff ff ff ff ff ff ff ff
  Address 0x40: ff ff ff ff 01 43 4d 55 49 41 4e 41 42 41 41 4a
  Address 0x50: 4e 50 31 30 4b 2d 4c 43 31 31 30 31 00 00 00 00
  Address 0x60: 00 00 00 00 00 00 41 42 00 ff ff ff ff ff ff ff
  Address 0x70: ff ff ff ef ff ff ff ff ff ff ff ff ff ff ff ff
  CPU                     BUILTIN      BUILTIN           FPC CPU
 Jedec Code:   0x7fb0            EEPROM Version:    0x02
 P/N:          BUILTIN           S/N:               BUILTIN
 Assembly ID:  0xf020            Assembly Version:  02.17
 Date:         04-19-2012        Assembly Flags:    0x00
 Board Information Record:
  Address 0x00: ad 01 01 04 ac 4b c8 1d f7 b6 ff ff ff ff ff ff
 I2C Hex Data:
  Address 0x00: 7f b0 02 ff f0 20 02 11 00 20 e7 d4 09 00 a6 4d
  Address 0x10: 09 e8 ba ff 42 55 49 4c 54 49 4e 00 00 20 e7 d4
  Address 0x20: 42 55 49 4c 54 49 4e 00 42 55 49 4c 00 13 04 07
  Address 0x30: dc ff ff ff ad 01 01 04 ac 4b c8 1d f7 b6 ff ff
  Address 0x40: ff ff ff ff 00 00 00 00 00 00 00 00 00 00 00 00
  Address 0x50: 00 00 00 00 00 00 00 00 00 00 00 00 00 00 00 00
  Address 0x60: 00 00 00 00 00 00 45 00 00 ff ff ff ff ff ff ff
  Address 0x70: ff ff ff f3 50 36 36 36 36 00 00 00 00 00 00 00
  PIC 0                   BUILTIN      BUILTIN           30x100GE/30x40GE/96x10GE

 Jedec Code:   0x7fb0            EEPROM Version:    0x02
 P/N:          BUILTIN           S/N:               BUILTIN
 Assembly ID:  0xf050            Assembly Version:  02.17
 Date:         04-19-2012        Assembly Flags:    0x00
 Board Information Record:
  Address 0x00: ad 01 01 04 ac 4b c8 1d f7 b6 ff ff ff ff ff ff
 I2C Hex Data:
  Address 0x00: 7f b0 02 ff f0 50 02 11 00 00 00 00 07 0a 20 45
  Address 0x10: 6c 61 70 73 42 55 49 4c 54 49 4e 00 25 73 3a 20
  Address 0x20: 42 55 49 4c 54 49 4e 00 25 73 3a 20 00 13 04 07
  Address 0x30: dc ff ff ff ad 01 01 04 ac 4b c8 1d f7 b6 ff ff
  Address 0x40: ff ff ff ff 01 00 00 00 00 00 00 00 00 00 00 00
  Address 0x50: 00 00 00 00 00 00 00 00 00 00 00 00 00 00 00 00
  Address 0x60: 00 00 00 00 00 00 45 00 00 ff ff ff ff ff ff ff
  Address 0x70: ff ff ff f3 55 55 55 55 55 55 55 55 55 55 55 55
    Xcvr 0                NON-JNPR     INGBT7970007      QSFP-100GBASE-LR4
    Xcvr 1                NON-JNPR     UWQ24D9           QSFP-100GBASE-LR4
    Xcvr 2                NON-JNPR     INGBT7970011      QSFP-100GBASE-LR4
    Xcvr 3                NON-JNPR     UX60AF1           QSFP-100G-CWDM4
    Xcvr 4                NON-JNPR     UX408JJ           QSFP-100GBASE-LR4
    Xcvr 11      REV 01   740-058734   1ECQ113835F       QSFP-100GBASE-SR4
    Xcvr 18               NON-JNPR     Q7496             QSFP-100G-CWDM4
    Xcvr 29      REV 01   740-058734   1ECQ11380LZ       QSFP-100GBASE-SR4
Power Supply 0   REV 02   740-049388   1EDL625039E       Power Supply AC
 Jedec Code:   0x7fb0            EEPROM Version:    0x02
 P/N:          740-049388        S/N:               1EDL625039E
 Assembly ID:  0x0483            Assembly Version:  01.02
 Date:         06-19-2016        Assembly Flags:    0x00
 Version:      REV 02            CLEI Code:         CMUPADNBAA
 ID: QFX10000 AC                 FRU Model Number:  QFX10000-PWR-AC
 Board Information Record:
  Address 0x00: ff ff ff ff ff ff ff ff ff ff ff ff ff ff ff ff
 I2C Hex Data:
```

```
  Address 0x00: 7f b0 02 ff 04 83 01 02 52 45 56 20 30 32 00 00
  Address 0x10: 00 00 00 00 37 34 30 2d 30 34 39 33 38 38 00 00
  Address 0x20: 31 45 44 4c 36 32 35 30 33 39 45 00 00 13 06 07
  Address 0x30: e0 ff ff ff ff ff ff ff ff ff ff ff ff ff ff ff
  Address 0x40: ff ff ff ff 01 43 4d 55 50 41 44 4e 42 41 41 51
  Address 0x50: 46 58 31 30 30 30 30 2d 50 57 52 2d 41 43 00 00
  Address 0x60: 00 00 00 00 00 00 01 30 31 ff ff ff ff ff ff ff
  Address 0x70: ff ff ff dc ff ff ff ff ff ff ff ff ff ff ff ff
Power Supply 1   REV 02   740-049388   1EDL62503AD       Power Supply AC
 Jedec Code:   0x7fb0            EEPROM Version:    0x02
 P/N:          740-049388        S/N:               1EDL62503AD
 Assembly ID:  0x0483            Assembly Version:  01.02
 Date:         06-19-2016        Assembly Flags:    0x00
 Version:      REV 02            CLEI Code:         CMUPADNBAA
 ID: QFX10000 AC                 FRU Model Number:  QFX10000-PWR-AC
 Board Information Record:
  Address 0x00: ff ff ff ff ff ff ff ff ff ff ff ff ff ff ff ff
 I2C Hex Data:
  Address 0x00: 7f b0 02 ff 04 83 01 02 52 45 56 20 30 32 00 00
  Address 0x10: 00 00 00 00 37 34 30 2d 30 34 39 33 38 38 00 00
  Address 0x20: 31 45 44 4c 36 32 35 30 33 41 44 00 00 13 06 07
  Address 0x30: e0 ff ff ff ff ff ff ff ff ff ff ff ff ff ff ff
  Address 0x40: ff ff ff ff 01 43 4d 55 50 41 44 4e 42 41 41 51
  Address 0x50: 46 58 31 30 30 30 30 2d 50 57 52 2d 41 43 00 00
  Address 0x60: 00 00 00 00 00 00 01 30 31 ff ff ff ff ff ff ff
  Address 0x70: ff ff ff dc ff ff ff ff ff ff ff ff ff ff ff ff
Power Supply 2   REV 02   740-049388   1EDL625039P       Power Supply AC
 Jedec Code:   0x7fb0            EEPROM Version:    0x02
 P/N:          740-049388        S/N:               1EDL625039P
 Assembly ID:  0x0483            Assembly Version:  01.02
 Date:         06-19-2016        Assembly Flags:    0x00
 Version:      REV 02            CLEI Code:         CMUPADNBAA
 ID: QFX10000 AC                 FRU Model Number:  QFX10000-PWR-AC
 Board Information Record:
  Address 0x00: ff ff ff ff ff ff ff ff ff ff ff ff ff ff ff ff
 I2C Hex Data:
  Address 0x00: 7f b0 02 ff 04 83 01 02 52 45 56 20 30 32 00 00
  Address 0x10: 00 00 00 00 37 34 30 2d 30 34 39 33 38 38 00 00
  Address 0x20: 31 45 44 4c 36 32 35 30 33 39 50 00 00 13 06 07
  Address 0x30: e0 ff ff ff ff ff ff ff ff ff ff ff ff ff ff ff
  Address 0x40: ff ff ff ff 01 43 4d 55 50 41 44 4e 42 41 41 51
  Address 0x50: 46 58 31 30 30 30 30 2d 50 57 52 2d 41 43 00 00
  Address 0x60: 00 00 00 00 00 00 01 30 31 ff ff ff ff ff ff ff
  Address 0x70: ff ff ff dc ff ff ff ff ff ff ff ff ff ff ff ff
Power Supply 3   REV 02   740-049388   1EDL702004E       Power Supply AC
 Jedec Code:   0x7fb0            EEPROM Version:    0x02
 P/N:          740-049388        S/N:               1EDL702004E
 Assembly ID:  0x0483            Assembly Version:  01.02
 Date:         01-18-2017        Assembly Flags:    0x00
 Version:      REV 02            CLEI Code:         CMUPADNBAA
 ID: QFX10000 AC                 FRU Model Number:  QFX10000-PWR-AC
 Board Information Record:
  Address 0x00: ff ff ff ff ff ff ff ff ff ff ff ff ff ff ff ff
 I2C Hex Data:
  Address 0x00: 7f b0 02 ff 04 83 01 02 52 45 56 20 30 32 00 00
  Address 0x10: 00 00 00 00 37 34 30 2d 30 34 39 33 38 38 00 00
  Address 0x20: 31 45 44 4c 37 30 32 30 30 34 45 00 00 12 01 07
  Address 0x30: e1 ff ff ff ff ff ff ff ff ff ff ff ff ff ff ff
  Address 0x40: ff ff ff ff 01 43 4d 55 50 41 44 4e 42 41 41 51
  Address 0x50: 46 58 31 30 30 30 30 2d 50 57 52 2d 41 43 00 00
  Address 0x60: 00 00 00 00 00 00 01 30 31 ff ff ff ff ff ff ff
```

```
  Address 0x70: ff ff ff dc ff ff ff ff ff ff ff ff ff ff ff ff
Power Supply 4   REV 02   740-049388   1EDL625039D       Power Supply AC
 Jedec Code:   0x7fb0            EEPROM Version:    0x02
 P/N:          740-049388        S/N:               1EDL625039D
 Assembly ID:  0x0483            Assembly Version:  01.02
 Date:         06-19-2016        Assembly Flags:    0x00
 Version:      REV 02            CLEI Code:         CMUPADNBAA
 ID: QFX10000 AC                 FRU Model Number:  QFX10000-PWR-AC
 Board Information Record:
  Address 0x00: ff ff ff ff ff ff ff ff ff ff ff ff ff ff ff ff
 I2C Hex Data:
  Address 0x00: 7f b0 02 ff 04 83 01 02 52 45 56 20 30 32 00 00
  Address 0x10: 00 00 00 00 37 34 30 2d 30 34 39 33 38 38 00 00
  Address 0x20: 31 45 44 4c 36 32 35 30 33 39 44 00 00 13 06 07
  Address 0x30: e0 ff ff ff ff ff ff ff ff ff ff ff ff ff ff ff
  Address 0x40: ff ff ff ff 01 43 4d 55 50 41 44 4e 42 41 41 51
  Address 0x50: 46 58 31 30 30 30 30 2d 50 57 52 2d 41 43 00 00
  Address 0x60: 00 00 00 00 00 00 01 30 31 ff ff ff ff ff ff ff
  Address 0x70: ff ff ff dc ff ff ff ff ff ff ff ff ff ff ff ff
Power Supply 5   REV 02   740-049388   1EDL63706JD       Power Supply AC
 Jedec Code:   0x7fb0            EEPROM Version:    0x02
 P/N:          740-049388        S/N:               1EDL63706JD
 Assembly ID:  0x0483            Assembly Version:  01.02
 Date:         09-13-2016        Assembly Flags:    0x00
 Version:      REV 02            CLEI Code:         CMUPADNBAA
 ID: QFX10000 AC                 FRU Model Number:  QFX10000-PWR-AC
 Board Information Record:
  Address 0x00: ff ff ff ff ff ff ff ff ff ff ff ff ff ff ff ff
 I2C Hex Data:
  Address 0x00: 7f b0 02 ff 04 83 01 02 52 45 56 20 30 32 00 00
  Address 0x10: 00 00 00 00 37 34 30 2d 30 34 39 33 38 38 00 00
  Address 0x20: 31 45 44 4c 36 33 37 30 36 4a 44 00 00 0d 09 07
  Address 0x30: e0 ff ff ff ff ff ff ff ff ff ff ff ff ff ff ff
  Address 0x40: ff ff ff ff 01 43 4d 55 50 41 44 4e 42 41 41 51
  Address 0x50: 46 58 31 30 30 30 30 2d 50 57 52 2d 41 43 00 00
  Address 0x60: 00 00 00 00 00 00 01 30 31 ff ff ff ff ff ff ff
  Address 0x70: ff ff ff dc ff ff ff ff ff ff ff ff ff ff ff ff
Power Supply 6   REV 02   740-049388   1EDL63706JH       Power Supply AC
 Jedec Code:   0x7fb0            EEPROM Version:    0x02
 P/N:          740-049388        S/N:               1EDL63706JH
 Assembly ID:  0x0483            Assembly Version:  01.02
 Date:         09-13-2016        Assembly Flags:    0x00
 Version:      REV 02            CLEI Code:         CMUPADNBAA
 ID: QFX10000 AC                 FRU Model Number:  QFX10000-PWR-AC
 Board Information Record:
  Address 0x00: ff ff ff ff ff ff ff ff ff ff ff ff ff ff ff ff
 I2C Hex Data:
  Address 0x00: 7f b0 02 ff 04 83 01 02 52 45 56 20 30 32 00 00
  Address 0x10: 00 00 00 00 37 34 30 2d 30 34 39 33 38 38 00 00
  Address 0x20: 31 45 44 4c 36 33 37 30 36 4a 48 00 00 0d 09 07
  Address 0x30: e0 ff ff ff ff ff ff ff ff ff ff ff ff ff ff ff
  Address 0x40: ff ff ff ff 01 43 4d 55 50 41 44 4e 42 41 41 51
  Address 0x50: 46 58 31 30 30 30 30 2d 50 57 52 2d 41 43 00 00
  Address 0x60: 00 00 00 00 00 00 01 30 31 ff ff ff ff ff ff ff
  Address 0x70: ff ff ff dc ff ff ff ff ff ff ff ff ff ff ff ff
FTC 0            REV 10   750-050309   ACPM2918          Fan Controller 16
 Jedec Code:   0x7fb0            EEPROM Version:    0x02
 P/N:          750-050309        S/N:               ACPM2918
 Assembly ID:  0x0b9c            Assembly Version:  01.10
 Date:         01-13-2017        Assembly Flags:    0x00
 Version:      REV 10            CLEI Code:         CMUCAH5CAA
```

```
 ID: QFX10016 FTC                FRU Model Number:  QFX10016-FAN-CTRL
 Board Information Record:
  Address 0x00: ff ff ff ff ff ff ff ff ff ff ff ff ff ff ff ff
 I2C Hex Data:
  Address 0x00: 7f b0 02 ff 0b 9c 01 0a 52 45 56 20 31 30 00 00
  Address 0x10: 00 00 00 00 37 35 30 2d 30 35 30 33 30 39 00 00
  Address 0x20: 53 2f 4e 20 41 43 50 4d 32 39 31 38 00 0d 01 07
  Address 0x30: e1 ff ff ff ff ff ff ff ff ff ff ff ff ff ff ff
  Address 0x40: ff ff ff ff 01 43 4d 55 43 41 48 35 43 41 41 51
  Address 0x50: 46 58 31 30 30 31 36 2d 46 41 4e 2d 43 54 52 4c
  Address 0x60: 00 00 00 00 00 00 41 41 00 ff ff ff ff ff ff ff
  Address 0x70: ff ff ff 6f ff ff ff ff ff ff ff ff ff ff ff ff
FTC 1            REV 10   750-050309   ACPE8185          Fan Controller 16
 Jedec Code:   0x7fb0            EEPROM Version:    0x02
 P/N:          750-050309        S/N:               ACPE8185
 Assembly ID:  0x0b9c            Assembly Version:  01.10
 Date:         12-22-2016        Assembly Flags:    0x00
 Version:      REV 10            CLEI Code:         CMUCAH5CAA
 ID: QFX10016 FTC                FRU Model Number:  QFX10016-FAN-CTRL
 Board Information Record:
  Address 0x00: ff ff ff ff ff ff ff ff ff ff ff ff ff ff ff ff
 I2C Hex Data:
  Address 0x00: 7f b0 02 ff 0b 9c 01 0a 52 45 56 20 31 30 00 00
  Address 0x10: 00 00 00 00 37 35 30 2d 30 35 30 33 30 39 00 00
  Address 0x20: 53 2f 4e 20 41 43 50 45 38 31 38 35 00 16 0c 07
  Address 0x30: e0 ff ff ff ff ff ff ff ff ff ff ff ff ff ff ff
  Address 0x40: ff ff ff ff 01 43 4d 55 43 41 48 35 43 41 41 51
  Address 0x50: 46 58 31 30 30 31 36 2d 46 41 4e 2d 43 54 52 4c
  Address 0x60: 00 00 00 00 00 00 41 41 00 ff ff ff ff ff ff ff
  Address 0x70: ff ff ff 6f ff ff ff ff ff ff ff ff ff ff ff ff
Fan Tray 0       REV 10   760-077141   ACPV7288          Fan Tray 16
 Jedec Code:   0x7fb0            EEPROM Version:    0x02
 P/N:          760-077141        S/N:               ACPV7288
 Assembly ID:  0x0bf1            Assembly Version:  01.10
 Date:         06-07-2017        Assembly Flags:    0x00
 Version:      REV 10            CLEI Code:         CMUCAH4CAA
 ID: QFX10016 FHB                FRU Model Number:  JNP10016-FAN
 Board Information Record:
  Address 0x00: ff ff ff ff ff ff ff ff ff ff ff ff ff ff ff ff
 I2C Hex Data:
  Address 0x00: 7f b0 02 ff 0b f1 01 0a 52 45 56 20 31 30 00 00
  Address 0x10: 00 00 00 00 37 36 30 2d 30 37 37 31 34 31 00 00
  Address 0x20: 53 2f 4e 20 41 43 50 56 37 32 38 38 00 07 06 07
  Address 0x30: e1 ff ff ff ff ff ff ff ff ff ff ff ff ff ff ff
  Address 0x40: ff ff ff ff 01 43 4d 55 43 41 48 34 43 41 41 4a
  Address 0x50: 4e 50 31 30 30 31 36 2d 46 41 4e 00 00 00 00 00
  Address 0x60: 00 00 00 00 00 00 41 42 00 ff ff ff ff ff ff ff
  Address 0x70: ff ff ff 0d ff ff ff ff ff ff ff ff ff ff ff ff
Fan Tray 1       REV 10   760-057901   ACPL0546          Fan Tray 16
 Jedec Code:   0x7fb0            EEPROM Version:    0x02
 P/N:          760-057901        S/N:               ACPL0546
 Assembly ID:  0x0bf1            Assembly Version:  01.10
 Date:         02-14-2017        Assembly Flags:    0x00
 Version:      REV 10            CLEI Code:         CMUCAH4CAA
 ID: QFX10016 FHB                FRU Model Number:  QFX10016-FAN
 Board Information Record:
  Address 0x00: ff ff ff ff ff ff ff ff ff ff ff ff ff ff ff ff
 I2C Hex Data:
  Address 0x00: 7f b0 02 ff 0b f1 01 0a 52 45 56 20 31 30 00 00
  Address 0x10: 00 00 00 00 37 36 30 2d 30 35 37 39 30 31 00 00
  Address 0x20: 53 2f 4e 20 41 43 50 4c 30 35 34 36 00 0e 02 07
```

```
  Address 0x30: e1 ff ff ff ff ff ff ff ff ff ff ff ff ff ff ff
  Address 0x40: ff ff ff ff 01 43 4d 55 43 41 48 34 43 41 41 51
  Address 0x50: 46 58 31 30 30 31 36 2d 46 41 4e 00 00 00 00 00
  Address 0x60: 00 00 00 00 00 00 41 42 00 ff ff ff ff ff ff ff
  Address 0x70: ff ff ff 0d ff ff ff ff ff ff ff ff ff ff ff ff
SIB 0            REV 15   750-058270   ACPM2804          Switch Fabric 16
 Jedec Code:   0x7fb0            EEPROM Version:    0x02
 P/N:          750-058270        S/N:               ACPM2804
 Assembly ID:  0x0bed            Assembly Version:  01.15
 Date:         12-21-2016        Assembly Flags:    0x00
 Version:      REV 15            CLEI Code:         CMUCAH6CAA
 ID: QFX10016 SIB                FRU Model Number:  QFX10016-SF
 Board Information Record:
  Address 0x00: ff ff ff ff ff ff ff ff ff ff ff ff ff ff ff ff
 I2C Hex Data:
  Address 0x00: 7f b0 02 ff 0b ed 01 0f 52 45 56 20 31 35 00 00
  Address 0x10: 00 00 00 00 37 35 30 2d 30 35 38 32 37 30 00 00
  Address 0x20: 53 2f 4e 20 41 43 50 4d 32 38 30 34 00 15 0c 07
  Address 0x30: e0 ff ff ff ff ff ff ff ff ff ff ff ff ff ff ff
  Address 0x40: ff ff ff ff 01 43 4d 55 43 41 48 36 43 41 41 51
  Address 0x50: 46 58 31 30 30 31 36 2d 53 46 00 00 00 00 00 00
  Address 0x60: 00 00 00 00 00 00 41 42 00 ff ff ff ff ff ff ff
  Address 0x70: ff ff ff d3 00 00 00 00 00 00 00 00 00 00 00 00
SIB 1            REV 15   750-058270   ACPM2808          Switch Fabric 16
 Jedec Code:   0x7fb0            EEPROM Version:    0x02
 P/N:          750-058270        S/N:               ACPM2808
 Assembly ID:  0x0bed            Assembly Version:  01.15
 Date:         12-21-2016        Assembly Flags:    0x00
 Version:      REV 15            CLEI Code:         CMUCAH6CAA
 ID: QFX10016 SIB                FRU Model Number:  QFX10016-SF
 Board Information Record:
  Address 0x00: ff ff ff ff ff ff ff ff ff ff ff ff ff ff ff ff
 I2C Hex Data:
  Address 0x00: 7f b0 02 ff 0b ed 01 0f 52 45 56 20 31 35 00 00
  Address 0x10: 00 00 00 00 37 35 30 2d 30 35 38 32 37 30 00 00
  Address 0x20: 53 2f 4e 20 41 43 50 4d 32 38 30 38 00 15 0c 07
  Address 0x30: e0 ff ff ff ff ff ff ff ff ff ff ff ff ff ff ff
  Address 0x40: ff ff ff ff 01 43 4d 55 43 41 48 36 43 41 41 51
  Address 0x50: 46 58 31 30 30 31 36 2d 53 46 00 00 00 00 00 00
  Address 0x60: 00 00 00 00 00 00 41 42 00 ff ff ff ff ff ff ff
  Address 0x70: ff ff ff d3 00 00 00 00 00 00 00 00 00 00 00 00
SIB 2            REV 15   750-058270   ACPL4450          Switch Fabric 16
 Jedec Code:   0x7fb0            EEPROM Version:    0x02
 P/N:          750-058270        S/N:               ACPL4450
 Assembly ID:  0x0bed            Assembly Version:  01.15
 Date:         02-17-2017        Assembly Flags:    0x00
 Version:      REV 15            CLEI Code:         CMUCAH6CAA
 ID: QFX10016 SIB                FRU Model Number:  QFX10016-SF
 Board Information Record:
  Address 0x00: ff ff ff ff ff ff ff ff ff ff ff ff ff ff ff ff
 I2C Hex Data:
  Address 0x00: 7f b0 02 ff 0b ed 01 0f 52 45 56 20 31 35 00 00
  Address 0x10: 00 00 00 00 37 35 30 2d 30 35 38 32 37 30 00 00
  Address 0x20: 53 2f 4e 20 41 43 50 4c 34 34 35 30 00 11 02 07
  Address 0x30: e1 ff ff ff ff ff ff ff ff ff ff ff ff ff ff ff
  Address 0x40: ff ff ff ff 01 43 4d 55 43 41 48 36 43 41 41 51
  Address 0x50: 46 58 31 30 30 31 36 2d 53 46 00 00 00 00 00 00
  Address 0x60: 00 00 00 00 00 00 41 42 00 ff ff ff ff ff ff ff
  Address 0x70: ff ff ff d3 00 00 00 00 00 00 00 00 00 00 00 00
SIB 3            REV 15   750-058270   ACPJ9834          Switch Fabric 16
 Jedec Code:   0x7fb0            EEPROM Version:    0x02
```

```
  P/N:          750-058270        S/N:               ACPJ9834
  Assembly ID:  0x0bed            Assembly Version:  01.15
  Date:         12-17-2016        Assembly Flags:    0x00
  Version:      REV 15            CLEI Code:         CMUCAH6CAA
  ID: QFX10016 SIB                FRU Model Number:  QFX10016-SF
  Board Information Record:
   Address 0x00: ff ff ff ff ff ff ff ff ff ff ff ff ff ff ff ff
  I2C Hex Data:
   Address 0x00: 7f b0 02 ff 0b ed 01 0f 52 45 56 20 31 35 00 00
   Address 0x10: 00 00 00 00 37 35 30 2d 30 35 38 32 37 30 00 00
   Address 0x20: 53 2f 4e 20 41 43 50 4a 39 38 33 34 00 11 0c 07
   Address 0x30: e0 ff ff ff ff ff ff ff ff ff ff ff ff ff ff ff
   Address 0x40: ff ff ff ff 01 43 4d 55 43 41 48 36 43 41 41 51
   Address 0x50: 46 58 31 30 30 31 36 2d 53 46 00 00 00 00 00 00
   Address 0x60: 00 00 00 00 00 00 41 42 00 ff ff ff ff ff ff ff
   Address 0x70: ff ff ff d3 00 00 00 00 00 00 00 00 00 00 00 00
SIB 4            REV 15   750-058270   ACPM2814          Switch Fabric 16
  Jedec Code:   0x7fb0            EEPROM Version:    0x02
  P/N:          750-058270        S/N:               ACPM2814
  Assembly ID:  0x0bed            Assembly Version:  01.15
  Date:         12-21-2016        Assembly Flags:    0x00
  Version:      REV 15            CLEI Code:         CMUCAH6CAA
  ID: QFX10016 SIB                FRU Model Number:  QFX10016-SF
  Board Information Record:
   Address 0x00: ff ff ff ff ff ff ff ff ff ff ff ff ff ff ff ff
  I2C Hex Data:
   Address 0x00: 7f b0 02 ff 0b ed 01 0f 52 45 56 20 31 35 00 00
   Address 0x10: 00 00 00 00 37 35 30 2d 30 35 38 32 37 30 00 00
   Address 0x20: 53 2f 4e 20 41 43 50 4d 32 38 31 34 00 15 0c 07
   Address 0x30: e0 ff ff ff ff ff ff ff ff ff ff ff ff ff ff ff
   Address 0x40: ff ff ff ff 01 43 4d 55 43 41 48 36 43 41 41 51
   Address 0x50: 46 58 31 30 30 31 36 2d 53 46 00 00 00 00 00 00
   Address 0x60: 00 00 00 00 00 00 41 42 00 ff ff ff ff ff ff ff
   Address 0x70: ff ff ff d3 00 00 00 00 00 00 00 00 00 00 00 00
SIB 5            REV 15   750-058270   ACPL4277          Switch Fabric 16
  Jedec Code:   0x7fb0            EEPROM Version:    0x02
  P/N:          750-058270        S/N:               ACPL4277
  Assembly ID:  0x0bed            Assembly Version:  01.15
  Date:         02-17-2017        Assembly Flags:    0x00
  Version:      REV 15            CLEI Code:         CMUCAH6CAA
  ID: QFX10016 SIB                FRU Model Number:  QFX10016-SF
  Board Information Record:
   Address 0x00: ff ff ff ff ff ff ff ff ff ff ff ff ff ff ff ff
  I2C Hex Data:
   Address 0x00: 7f b0 02 ff 0b ed 01 0f 52 45 56 20 31 35 00 00
   Address 0x10: 00 00 00 00 37 35 30 2d 30 35 38 32 37 30 00 00
   Address 0x20: 53 2f 4e 20 41 43 50 4c 34 32 37 37 00 11 02 07
   Address 0x30: e1 ff ff ff ff ff ff ff ff ff ff ff ff ff ff ff
   Address 0x40: ff ff ff ff 01 43 4d 55 43 41 48 36 43 41 41 51
   Address 0x50: 46 58 31 30 30 31 36 2d 53 46 00 00 00 00 00 00
   Address 0x60: 00 00 00 00 00 00 41 42 00 ff ff ff ff ff ff ff
   Address 0x70: ff ff ff d3 00 00 00 00 00 00 00 00 00 00 00 00
FPD Board        REV 07   711-054687   ACPL1407          Front Panel Display
  Jedec Code:   0x7fb0            EEPROM Version:    0x01
  P/N:          711-054687        S/N:               ACPL1407
  Assembly ID:  0x0bf2            Assembly Version:  01.07
  Date:         02-12-2017        Assembly Flags:    0x00
  Version:      REV 07
  ID: QFX10000 FPD
  Board Information Record:
   Address 0x00: ff ff ff ff ff ff ff ff ff ff ff ff ff ff ff ff
```

```
 I2C Hex Data:
  Address 0x00: 7f b0 01 ff 0b f2 01 07 52 45 56 20 30 37 00 00
  Address 0x10: 00 00 00 00 37 31 31 2d 30 35 34 36 38 37 00 00
  Address 0x20: 53 2f 4e 20 41 43 50 4c 31 34 30 37 00 0c 02 07
  Address 0x30: e1 ff ff ff ff ff ff ff ff ff ff ff ff ff ff ff
  Address 0x40: ff ff ff ff ff ff ff ff ff ff ff ff ff ff ff ff
  Address 0x50: ff ff ff ff ff ff ff ff ff ff ff ff ff ff ff ff
  Address 0x60: ff ff ff ff ff ff ff ff ff ff ff ff ff ff ff ff
  Address 0x70: ff ff ff ff ff ff ff ff ff ff ff ff ff ff ff ff
```

show chassis hardware models (MX104 Router)

```
user@host> show chassis hardware models
Hardware inventory:
Item             Version  Part number  Serial number     FRU model number
Midplane         REV 20   750-044219   CAAS5849          PROTO-ASSEMBLY
PEM 0            REV 01   740-045932   1H072400065
Routing Engine 0 REV 16   750-044228   CAAR5915          PROTO-ASSEMBLY
AFEB 0                    BUILTIN      BUILTIN
FPC 0                     BUILTIN      BUILTIN
FPC 1                     BUILTIN      BUILTIN
  MIC 0          REV 01   750-046905   CAAK7103          MIC-3D-20GE-SFP-EH
FPC 2                     BUILTIN      BUILTIN
Fan Tray         REV 02   711-049570   CAAX6538          PROTO-ASSEMBLY
```

show chassis hardware models (PTX10008 Router)

```
user@host> show chassis hardware models
Hardware inventory:
Item             Version  Part number  Serial number     FRU model number
Midplane         REV 27   750-054097   ACPD4307          QFX10008-CHAS
CB 0             REV 02   750-068820   ACNZ4440          QFX10000-RE
CB 1             REV 02   750-068820   ACNZ8284          QFX10000-RE
FPC 0            REV 36   750-051354   ACNP4679          QFX10000-36Q
  PIC 0                   BUILTIN      BUILTIN
FPC 1            REV 33   750-051354   ACNX8831          QFX10000-36Q
  PIC 0                   BUILTIN      BUILTIN
FPC 2            REV 32   750-051357   ACPB0341          QFX10000-30C
  PIC 0                   BUILTIN      BUILTIN
FPC 3            REV 35   750-051357   ACPD2186          QFX10000-30C
  PIC 0                   BUILTIN      BUILTIN
FPC 5            REV 08   750-068822   ACPF0057          QFX10000-36Q
  PIC 0                   BUILTIN      BUILTIN
FPC 6            REV 08   750-068822   ACPE9951          QFX10000-36Q
  PIC 0                   BUILTIN      BUILTIN
FPD Board        REV 07   711-054687   ACPC7142
Power Supply 0   REV 02   740-049388   1EDL62102N9       QFX10000-PWR-AC
Power Supply 1   REV 02   740-049388   1EDL60300KX       QFX10000-PWR-AC
Power Supply 2   REV 02   740-049388   1EDL60300DL       QFX10000-PWR-AC
Power Supply 3   REV 02   740-049388   1EDL61701BT       QFX10000-PWR-AC
Power Supply 4   REV 02   740-049388   1EDL62102P7       QFX10000-PWR-AC
Power Supply 5   REV 02   740-049388   1EDL62102PP       QFX10000-PWR-AC
FTC 0            REV 14   750-050108   ACPE4038          QFX10008-FAN-CTRL
FTC 1            REV 14   750-050108   ACPE4032          QFX10008-FAN-CTRL
Fan Tray 0       REV 09   760-054372   ACPD6799          QFX10008-FAN
Fan Tray 1       REV 09   760-054372   ACNZ3584          QFX10008-FAN
SIB 0            REV 24   750-050058   ACPD4587          QFX10008-SF
SIB 1            REV 24   750-050058   ACNZ0635          QFX10008-SF
SIB 2            REV 24   750-050058   ACPD4908          QFX10008-SF
SIB 3            REV 24   750-050058   ACNZ0617          QFX10008-SF
```

```
SIB 4            REV 24   750-050058   ACNZ0527          QFX10008-SF
SIB 5            REV 23   750-050058   ACNX6980          QFX10008-SF
```

show chassis hardware models (PTX10016 Router)

```
user@host> show chassis hardware models
Hardware inventory:
Item             Version  Part number  Serial number     FRU model number
Midplane         REV 24   750-077138   ACPR5157          JNP10016
CB 0             REV 04   711-065897   CAHA9983          PROTO-ASSEMBLY
CB 1             REV 05   711-065897   CAJD3802          PROTO-ASSEMBLY
FPC 2
  PIC 0                   BUILTIN      BUILTIN
FPC 4            REV 35   750-071976   ACPD2168          JNP10K-LC1101
  PIC 0                   BUILTIN      BUILTIN
FPC 5            REV 13   750-068822   ACPA0336          JNP10K-LC1101
  PIC 0                   BUILTIN      BUILTIN
FPC 6            REV 41   750-071976   ACPF0695          JNP10K-LC1101
  PIC 0                   BUILTIN      BUILTIN
FPC 7            REV 35   750-071976   ACPD2139          JNP10K-LC1101
  PIC 0                   BUILTIN      BUILTIN
FPC 8            REV 35   750-071976   ACPD2142          JNP10K-LC1101
  PIC 0                   BUILTIN      BUILTIN
FPC 9            REV 41   750-071976   ACPM5461          JNP10K-LC1101
  PIC 0                   BUILTIN      BUILTIN
FPC 10           REV 35   750-071976   ACNS6795          JNP10K-LC1101
  PIC 0                   BUILTIN      BUILTIN
FPC 11           REV 35   750-071976   ACPD1831          JNP10K-LC1101
  PIC 0                   BUILTIN      BUILTIN
FPC 13           REV 41   750-071976   ACPS2075          JNP10K-LC1101
  PIC 0                   BUILTIN      BUILTIN
FPC 15           REV 37   750-071976   ACPL7163          JNP10K-LC1101
  PIC 0                   BUILTIN      BUILTIN
Power Supply 0   REV 01   740-073147   1EDM6171155       JNP10K-PWR-DC
Power Supply 1   REV 01   740-073147   1EDM6281575       JNP10K-PWR-DC
Power Supply 2   REV 01   740-073147   1EDM6171044       JNP10K-PWR-DC
Power Supply 3   REV 01   740-073147   1EDM6281244       JNP10K-PWR-DC
Power Supply 4   REV 01   740-073147   1EDM6282093       JNP10K-PWR-DC
Power Supply 5   REV 01   740-073147   1EDM6281413       JNP10K-PWR-DC
Power Supply 6   REV 01   740-073147   1EDM6171071       JNP10K-PWR-DC
Power Supply 7   REV 01   740-073147   1EDM6170709       JNP10K-PWR-DC
Power Supply 8   REV 01   740-073147   1EDM6171169       JNP10K-PWR-DC
Power Supply 9   REV 01   740-073147   1EDM6170754       JNP10K-PWR-DC
Fan Tray 0                                               QFX5100-FAN-AFO
Fan Tray 1                                               QFX5100-FAN-AFO
SIB 0            REV 15   750-077140   ACPV3933          JNP10016-SF
SIB 1            REV 15   750-077140   ACPV3938          JNP10016-SF
SIB 2            REV 15   750-077140   ACPV3974          JNP10016-SF
SIB 3            REV 15   750-077140   ACPV3879          JNP10016-SF
SIB 4            REV 15   750-077140   ACPV3964          JNP10016-SF
SIB 5            REV 15   750-077140   ACPV3981          JNP10016-SF
FPD Board        REV 07   711-054687   ACPS8855
```

show chassis hardware clei-models (MX104 Router)

```
user@host> show chassis hardware clei-models
Hardware inventory:
Item             Version  Part number  CLEI code         FRU model number
Midplane         REV 20   750-044219   PROTOXCLEI        PROTO-ASSEMBLY
PEM 0            REV 01   740-045932
```

```
Routing Engine 0 REV 16   750-044228   PROTOXCLEI        PROTO-ASSEMBLY
AFEB 0                    BUILTIN
FPC 0                     BUILTIN
FPC 1                     BUILTIN
  MIC 0          REV 01   750-046905   PROTOXCLEI        MIC-3D-20GE-SFP-EH
FPC 2                     BUILTIN
Fan Tray        REV 02   711-049570   CAAX6538          PROTO-ASSEMBLY
```

show chassis hardware (MX240 Router)

```
user@host> show chassis hardware
Hardware inventory:
Item             Version  Part number  Serial number     Description
Chassis                                JN10C7F7EAFC      MX240
Midplane         REV 01   710-021041   TR1502            MX240 Backplane
FPM Board        REV 01   710-017254   KD4017            Front Panel Display
PEM 0            Rev 02   740-017330   000332            PS 1.2-1.7kW; 100-240V
AC in
PEM 1            Rev 02   740-017330   000226            PS 1.2-1.7kW; 100-240V
AC in
Routing Engine 0 REV 06   740-013063   1000703522        RE-S-2000
Routing Engine 1 REV 06   740-015113   1000687625        RE-S-1300
CB 0             REV 07   710-013385   KC9057            MX SCB
CB 1             REV 05   710-013385   JY4760            MX SCB
FPC 1            REV 01   750-021679   KC7340            DPCE 40x 1GE R
  CPU            REV 06   710-013713   KD4078            DPC PMB
  PIC 0                   BUILTIN      BUILTIN           10x 1GE(LAN)
    Xcvr 0       REV 01   740-011613   P9F18ME           SFP-SX
  PIC 1                   BUILTIN      BUILTIN           10x 1GE(LAN)
  PIC 2                   BUILTIN      BUILTIN           10x 1GE(LAN)
  PIC 3                   BUILTIN      BUILTIN           10x 1GE(LAN)
FPC 2            REV 04   710-016669   JS4529            DPCE 40x 1GE R EQ
  CPU            REV 06   710-013713   KB3969            DPC PMB
  PIC 0                   BUILTIN      BUILTIN           10x 1GE(LAN) EQ
    Xcvr 0       REV 01   740-011613   PBG3Y79           SFP-SX
    Xcvr 1       REV 01   740-011613   PBG3XU8           SFP-SX
    Xcvr 2       REV 01   740-011613   PBG3YG6           SFP-SX
    Xcvr 3       REV 01   740-011613   PBG3XUG           SFP-SX
    Xcvr 4       REV 01   740-011613   PBG3XTJ           SFP-SX
  PIC 1                   BUILTIN      BUILTIN           10x 1GE(LAN) EQ
    Xcvr 0       REV 01   740-011613   PBG3ZUM           SFP-SX
    Xcvr 1       REV 01   740-011613   PBG3Y5H           SFP-SX
    Xcvr 2       REV 01   740-011613   PBG3UZT           SFP-SX
    Xcvr 3       REV 01   740-011613   PBG3US1           SFP-SX
  PIC 2                   BUILTIN      BUILTIN           10x 1GE(LAN) EQ
    Xcvr 0       REV 01   740-011613   PBG3YG7           SFP-SX
    Xcvr 1       REV 01   740-011613   PBG3XZ9           SFP-SX
    Xcvr 2       REV 01   740-011613   PBG3XTY           SFP-SX
    Xcvr 3       REV 01   740-011613   PBG3UZG           SFP-SX
  PIC 3                   BUILTIN      BUILTIN           10x 1GE(LAN) EQ
    Xcvr 0       REV 01   740-011613   PBG3Y8W           SFP-SX
    Xcvr 1       REV 01   740-011613   PBG3YVX           SFP-SX
    Xcvr 2       REV 01   740-011613   PBG3YB3           SFP-SX
    Xcvr 3       REV 01   740-011613   PBG43VQ           SFP-SX
Fan Tray 0       REV 01   710-021113   JS4642            MX240 Fan Tray
```

show chassis hardware detail (MX 240 Router with Routing Engine Displaying DIMM Information)

```
user@host> show chassis hardware detail
```

```
Item             Version  Part number  Serial number     Description
Chassis                                JN11279B4AFC      MX240 Backplane
Midplane         REV 07   760-021404   TS2474            MX240 Backplane
FPM Board        REV 03   760-021392   XC2643            Front Panel Display
PEM 0            Rev 03   740-017343   QCS0908A068       DC Power Entry Module
Routing Engine 0 REV 01   740-031117   AARCHOO           RE-S-1800x4
  ad0    3764 MB  STEC M2+ CF 9.0.2    STIM2Q3209239145303 Removable Compact Flash

  ad1   28626 MB  WDC SSD-F0030S-5000  C933Z036237215548S00 Compact Flash
  usb0 (addr 1)  EHCI root hub 0       Intel             uhub0
  usb0 (addr 2)  product 0x0020 32     vendor 0x8087     uhub1
  DIMM 0         VL31B5263E-F8S DIE REV-0 PCB REV-0      MFR ID-ce80
  DIMM 1         VL31B5263E-F8S DIE REV-0 PCB REV-0      MFR ID-ce80
  DIMM 2         VL31B5263E-F8S DIE REV-0 PCB REV-0      MFR ID-ce80
  DIMM 3         SL31B5263E-F8S DIE REV-0 PCB REV-0      MFR ID-ce80
CB 0             REV 03   710-021523   XD7225            MX SCB
Fan Tray 0       REV 01   710-021113   WZ4986            MX240 Fan Tray
```

show chassis hardware (MX240 Router with Enhanced MX SCB)

```
user@host> show chassis hardware
Hardware inventory:
Item             Version  Part number  Serial number     Description
Chassis                                JN10C7F7EAFC      MX240
Midplane         REV 01   710-021041   TR1502            MX240 Backplane
FPM Board        REV 01   710-017254   KD4017            Front Panel Display
PEM 0            Rev 02   740-017330   000332            PS 1.2-1.7kW; 100-240V
AC in
PEM 1            Rev 02   740-017330   000226            PS 1.2-1.7kW; 100-240V
AC in
Routing Engine 0 REV 06   740-013063   1000703522        RE-S-2000
Routing Engine 1 REV 06   740-015113   1000687625        RE-S-1300
CB 0             REV 02   710-031391   YE8494            Enhanced MX SCB
CB 1             REV 05   710-031391   YOP5764           Enhanced MX SCB
FPC 1            REV 01   750-021679   KC7340            DPCE 40x 1GE R
  CPU            REV 06   710-013713   KD4078            DPC PMB
  PIC 0                   BUILTIN      BUILTIN           10x 1GE(LAN)
    Xcvr 0       REV 01   740-011613   P9F18ME           SFP-SX
  PIC 1                   BUILTIN      BUILTIN           10x 1GE(LAN)
  PIC 2                   BUILTIN      BUILTIN           10x 1GE(LAN)
  PIC 3                   BUILTIN      BUILTIN           10x 1GE(LAN)
FPC 2            REV 04   710-016669   JS4529            DPCE 40x 1GE R EQ
  CPU            REV 06   710-013713   KB3969            DPC PMB
  PIC 0                   BUILTIN      BUILTIN           10x 1GE(LAN) EQ
    Xcvr 0       REV 01   740-011613   PBG3Y79           SFP-SX
    Xcvr 1       REV 01   740-011613   PBG3XU8           SFP-SX
    Xcvr 2       REV 01   740-011613   PBG3YG6           SFP-SX
    Xcvr 3       REV 01   740-011613   PBG3XUG           SFP-SX
    Xcvr 4       REV 01   740-011613   PBG3XTJ           SFP-SX
  PIC 1                   BUILTIN      BUILTIN           10x 1GE(LAN) EQ
    Xcvr 0       REV 01   740-011613   PBG3ZUM           SFP-SX
    Xcvr 1       REV 01   740-011613   PBG3Y5H           SFP-SX
    Xcvr 2       REV 01   740-011613   PBG3UZT           SFP-SX
    Xcvr 3       REV 01   740-011613   PBG3US1           SFP-SX
  PIC 2                   BUILTIN      BUILTIN           10x 1GE(LAN) EQ
    Xcvr 0       REV 01   740-011613   PBG3YG7           SFP-SX
    Xcvr 1       REV 01   740-011613   PBG3XZ9           SFP-SX
    Xcvr 2       REV 01   740-011613   PBG3XTY           SFP-SX
    Xcvr 3       REV 01   740-011613   PBG3UZG           SFP-SX
  PIC 3                   BUILTIN      BUILTIN           10x 1GE(LAN) EQ
```

```
    Xcvr 0       REV 01   740-011613   PBG3Y8W           SFP-SX
    Xcvr 1       REV 01   740-011613   PBG3YVX           SFP-SX
    Xcvr 2       REV 01   740-011613   PBG3YB3           SFP-SX
    Xcvr 3       REV 01   740-011613   PBG43VQ           SFP-SX
Fan Tray 0       REV 01   710-021113   JS4642            MX240 Fan Tray
```

show chassis hardware (MX480 Router)

```
user@host> show chassis hardware
Hardware inventory:
Item             Version  Part number  Serial number     Description
Chassis                                JN10C7F7FAFB      MX480
Midplane         REV 04   710-017414   TR2071            MX480 Midplane
FPM Board        REV 02   710-017254   KB8459            Front Panel Display
PEM 0            Rev 02   740-017330   QCS07519029       PS 1.2-1.7kW; 100-240V
AC in
PEM 1            Rev 02   740-017330   QCS07519041       PS 1.2-1.7kW; 100-240V
AC in
PEM 2            Rev 02   740-017330   QCS07519097       PS 1.2-1.7kW; 100-240V
AC in
Routing Engine 0 REV 07   740-013063   1000733381        RE-S-2000
Routing Engine 1 REV 07   740-013063   1000733540        RE-S-2000
CB 0             REV 07   710-013385   KA8022            MX SCB
CB 1             REV 07   710-013385   KA8303            MX SCB
FPC 0            REV 09   750-020452   KA8660            DPCE 40x 1GE X EQ
  CPU            REV 06   710-013713   KA8185            DPC PMB
  PIC 0                   BUILTIN      BUILTIN           10x 1GE(LAN) EQ
  PIC 1                   BUILTIN      BUILTIN           10x 1GE(LAN) EQ
  PIC 2                   BUILTIN      BUILTIN           10x 1GE(LAN) EQ
  PIC 3                   BUILTIN      BUILTIN           10x 1GE(LAN) EQ
Fan Tray                                                  Left Fan Tray
```

show chassis hardware (MX480 Router with Enhanced MX SCB)

```
user@host> show chassis hardware
Hardware inventory:
Item             Version  Part number  Serial number     Description
Chassis                                JN10C7F7FAFB      MX480
Midplane         REV 04   710-017414   TR2071            MX480 Midplane
FPM Board        REV 02   710-017254   KB8459            Front Panel Display
PEM 0            Rev 02   740-017330   QCS07519029       PS 1.2-1.7kW; 100-240V
AC in
PEM 1            Rev 02   740-017330   QCS07519041       PS 1.2-1.7kW; 100-240V
AC in
PEM 2            Rev 02   740-017330   QCS07519097       PS 1.2-1.7kW; 100-240V
AC in
Routing Engine 0 REV 07   740-013063   1000733381        RE-S-2000
Routing Engine 1 REV 07   740-013063   1000733540        RE-S-2000
CB 0             REV 07   710-013385   KA8022            Enhanced MX SCB
CB 1             REV 07   710-013385   KA8303            Enhanced MX SCB
FPC 0            REV 09   750-020452   KA8660            DPCE 40x 1GE X EQ
  CPU            REV 06   710-013713   KA8185            DPC PMB
  PIC 0                   BUILTIN      BUILTIN           10x 1GE(LAN) EQ
  PIC 1                   BUILTIN      BUILTIN           10x 1GE(LAN) EQ
  PIC 2                   BUILTIN      BUILTIN           10x 1GE(LAN) EQ
  PIC 3                   BUILTIN      BUILTIN           10x 1GE(LAN) EQ
Fan Tray                                                  Left Fan Tray
```

show chassis hardware (MX480 Routers with MPC5E and Built-In OTN PIC)

```
user@host> show chassis hardware
Hardware inventory:
Item             Version  Part number  Serial number     Description
Chassis                                JN11C0338AFB      MX480
Midplane         REV 05   710-017414   ABAB8430          MX480 Midplane
FPM Board        REV 02   710-017254   ZS8005            Front Panel Display
PEM 0            Rev 05   740-029970   QCS1024U089       PS 1.4-2.52kW; 90-264V
AC in
PEM 1            Rev 10   740-029970   QCS1314U0FJ       PS 1.4-2.52kW; 90-264V
AC in
PEM 2            Rev 07   740-029970   QCS1121U076       PS 1.4-2.52kW; 90-264V
AC in
Routing Engine 0 REV 05   740-031116   9009092471        RE-S-1800x4
Routing Engine 1 REV 05   740-031116   9009097958        RE-S-1800x4
CB 0             REV 16   750-031391   CAAX0789          Enhanced MX SCB
CB 1             REV 16   750-031391   CAAX0856          Enhanced MX SCB
FPC 0            REV 32   750-028467   ABBP1782          MPC 3D 16x 10GE
  CPU            REV 10   711-029089   ABBP5410          AMPC PMB
  PIC 0                   BUILTIN      BUILTIN           4x 10GE(LAN) SFP+
    Xcvr 0       REV 01   740-021308   983152A00038      SFP+-10G-SR
    Xcvr 1       REV 01   740-031980   B11F00211         SFP+-10G-SR
    Xcvr 2       REV 01   740-031980   AQ72LPB           SFP+-10G-SR
    Xcvr 3       REV 01   740-031980   AHN0WR5           SFP+-10G-SR
  PIC 1                   BUILTIN      BUILTIN           4x 10GE(LAN) SFP+
    Xcvr 0       REV 01   740-031980   B11J03627         SFP+-10G-SR
    Xcvr 1       REV 01   740-031980   B11F00300         SFP+-10G-SR
    Xcvr 2       REV 01   740-021308   AQ42WSS           SFP+-10G-SR
    Xcvr 3       REV 01   740-021308   AQ43HGC           SFP+-10G-SR
  PIC 2                   BUILTIN      BUILTIN           4x 10GE(LAN) SFP+
    Xcvr 0       REV 01   740-021308   ANA0ND0           SFP+-10G-SR
    Xcvr 1       REV 01   740-021308   ANA0NGF           SFP+-10G-SR
    Xcvr 2       REV 01   740-021308   ANA0NG9           SFP+-10G-SR
    Xcvr 3       REV 01   740-021308   ANA0MP9           SFP+-10G-SR
  PIC 3                   BUILTIN      BUILTIN           4x 10GE(LAN) SFP+
    Xcvr 0       REV 01   740-021308   AQA06CG           SFP+-10G-SR
    Xcvr 1       REV 01   740-021308   19T511100493      SFP+-10G-SR
    Xcvr 2       REV 01   740-031980   APR040J           SFP+-10G-SR
FPC 1            REV 26   750-046005   CACN1894          MPC5E 3D Q 2CGE+4XGE
  CPU            REV 09   711-045719   CACN8698          RMPC PMB
  PIC 0                   BUILTIN      BUILTIN           2X10GE SFPP OTN
    Xcvr 0       REV 01   740-031980   163363A03046      SFP+-10G-SR
    Xcvr 1       REV 01   740-031980   AJ40JS8           SFP+-10G-SR
  PIC 1                   BUILTIN      BUILTIN           1X100GE CFP2 OTN
  PIC 2                   BUILTIN      BUILTIN           2X10GE SFPP OTN
    Xcvr 0       REV 01   740-031980   153363A00593      SFP+-10G-SR
    Xcvr 1       REV 01   740-031980   AJ40JUJ           SFP+-10G-SR
  PIC 3                   BUILTIN      BUILTIN           1X100GE CFP2 OTN
    Xcvr 0                NON-JNPR     UQC0B53           CFP2-100G-LR4-D
FPC 2            REV 26   750-046005   CACN1891          MPC5E 3D Q 2CGE+4XGE
  CPU            REV 09   711-045719   CACN8694          RMPC PMB
  PIC 0                   BUILTIN      BUILTIN           2X10GE SFPP OTN
    Xcvr 0                NON-JNPR     URA012A           SFP+-10G-LR
  PIC 1                   BUILTIN      BUILTIN           1X100GE CFP2 OTN
    Xcvr 0                NON-JNPR     J13F47042         CFP2-100G-LR4-D
  PIC 2                   BUILTIN      BUILTIN           2X10GE SFPP OTN
    Xcvr 0       REV 01   740-031980   AJC0BM3           SFP+-10G-SR
    Xcvr 1       REV 01   740-021308   11T511100917      SFP+-10G-SR
  PIC 3                   BUILTIN      BUILTIN           1X100GE CFP2 OTN
    Xcvr 0                NON-JNPR     UQK07SU           CFP2-100G-LR4-D
```

```
FPC 3            REV 03   750-045372   CAAD9425          MPCE Type 3 3D
CPU            REV 08   711-035209   CAAD9094          HMPC PMB 2G
  MIC 0          REV 14   750-033196   CAAW9204          1X100GE CXP
    PIC 0                 BUILTIN      BUILTIN           1X100GE CXP
      Xcvr 0     REV 01   740-046563   XD16FC034         CFP2-100G-SR10
  MIC 1          REV 19   750-033199   CAAJ1814          1X100GE CFP
    PIC 2                 BUILTIN      BUILTIN           1X100GE CFP
FPC 4            REV 21.0.11 750-045715 CAAY3568         MPC5E 3D Q 24XGE+6XLGE
  CPU            REV 07   711-045719   CAAW7430          RMPC PMB
  PIC 0                   BUILTIN      BUILTIN           12X10GE SFPP OTN
    Xcvr 0       REV 01   740-031980   AP406NG           SFP+-10G-SR
    Xcvr 1       REV 01   740-021308   AR41NLP           SFP+-10G-SR
    Xcvr 2       REV 01   740-031980   B11D05630         SFP+-10G-SR
  PIC 1                   BUILTIN      BUILTIN           12X10GE SFPP OTN
  PIC 2                   BUILTIN      BUILTIN           3X40GE QSFPP
  PIC 3                   BUILTIN      BUILTIN           3X40GE QSFPP
  WAN MEZZ       REV 12   750-049136   CACM6678          MPC5E 24XGE OTN Mezz
FPC 5            REV 11   750-045372   CABK7539          MPCE Type 3 3D
  CPU            REV 08   711-035209   CABJ2466          HMPC PMB 2G
  MIC 0          REV 19   750-033199   CAAJ9719          1X100GE CFP
    PIC 0                 BUILTIN      BUILTIN           1X100GE CFP
      Xcvr 0     REV 01   740-035329   UP1020P           CFP-100G-SR10
  MIC 1          REV 07   750-033196   YZ0797            1X100GE CXP
    PIC 2                 BUILTIN      BUILTIN           1X100GE CXP
      Xcvr 0     REV 01   740-046563   XC42FC022         CFP2-100G-SR10
Fan Tray                                                 Enhanced Left Fan Tray
```

show chassis hardware detail (MX480 Routers with MPC5E and Built-In OTN PIC)

```
user@host> show chassis hardware detail
Hardware inventory:
Item             Version  Part number  Serial number     Description
Chassis                               JN11C0338AFB      MX480
Midplane         REV 05   710-017414   ABAB8430          MX480 Midplane
FPM Board        REV 02   710-017254   ZS8005            Front Panel Display
PEM 0            Rev 05   740-029970   QCS1024U089       PS 1.4-2.52kW; 90-264V
AC in
PEM 1            Rev 10   740-029970   QCS1314U0FJ       PS 1.4-2.52kW; 90-264V
AC in
PEM 2            Rev 07   740-029970   QCS1121U076       PS 1.4-2.52kW; 90-264V
AC in
Routing Engine 0 REV 05   740-031116   9009092471        RE-S-1800x4
  ad0    3896 MB  VRFCF14096DIHK1      VM4096MB 6862     Compact Flash
  ad1   30533 MB  UGB94ARF32H0S3-KC    UNIGEN-478612-001127 Disk 1
  usb0 (addr 1)  EHCI root hub 0       Intel             uhub0
  usb0 (addr 2)  product 0x0020 32     vendor 0x8087     uhub1
  DIMM 0         SGU04G72H1BB2SA-BB DIE REV-52 PCB REV-54 MFR ID-ce80
  DIMM 1         SGU04G72H1BB2SA-BB DIE REV-52 PCB REV-54 MFR ID-ce80
  DIMM 2         SGU04G72H1BB2SA-BB DIE REV-52 PCB REV-54 MFR ID-ce80
  DIMM 3         SGU04G72H1BB2SA-BB DIE REV-52 PCB REV-54 MFR ID-ce80
Routing Engine 1 REV 05   740-031116   9009097958        RE-S-1800x4
  ad0    3896 MB  VRFCF14096DIHK1      VM4096MB 6145     Compact Flash
  ad1   30533 MB  UGB94ARF32H0S3-KC    UNIGEN-499551-000273 Disk 1
CB 0             REV 16   750-031391   CAAX0789          Enhanced MX SCB
CB 1             REV 16   750-031391   CAAX0856          Enhanced MX SCB
FPC 0            REV 32   750-028467   ABBP1782          MPC 3D 16x 10GE
  CPU            REV 10   711-029089   ABBP5410          AMPC PMB
  PIC 0                   BUILTIN      BUILTIN           4x 10GE(LAN) SFP+
    Xcvr 0       REV 01   740-021308   983152A00038      SFP+-10G-SR
    Xcvr 1       REV 01   740-031980   B11F00211         SFP+-10G-SR
    Xcvr 2       REV 01   740-031980   AQ72LPB           SFP+-10G-SR
```



```
    Xcvr 3       REV 01   740-031980   AHN0WR5           SFP+-10G-SR
  PIC 1                   BUILTIN      BUILTIN           4x 10GE(LAN) SFP+
    Xcvr 0       REV 01   740-031980   B11J03627         SFP+-10G-SR
    Xcvr 1       REV 01   740-031980   B11F00300         SFP+-10G-SR
    Xcvr 2       REV 01   740-021308   AQ42WSS           SFP+-10G-SR
    Xcvr 3       REV 01   740-021308   AQ43HGC           SFP+-10G-SR
  PIC 2                   BUILTIN      BUILTIN           4x 10GE(LAN) SFP+
    Xcvr 0       REV 01   740-021308   ANA0ND0           SFP+-10G-SR
    Xcvr 1       REV 01   740-021308   ANA0NGF           SFP+-10G-SR
    Xcvr 2       REV 01   740-021308   ANA0NG9           SFP+-10G-SR
    Xcvr 3       REV 01   740-021308   ANA0MP9           SFP+-10G-SR
  PIC 3                   BUILTIN      BUILTIN           4x 10GE(LAN) SFP+
    Xcvr 0       REV 01   740-021308   AQA06CG           SFP+-10G-SR
    Xcvr 1       REV 01   740-021308   19T511100493      SFP+-10G-SR
    Xcvr 2       REV 01   740-031980   APR040J           SFP+-10G-SR
FPC 1            REV 26   750-046005   CACN1894          MPC5E 3D Q 2CGE+4XGE
  CPU            REV 09   711-045719   CACN8698          RMPC PMB
  PIC 0                   BUILTIN      BUILTIN           2X10GE SFPP OTN
    Xcvr 0       REV 01   740-031980   163363A03046      SFP+-10G-SR
    Xcvr 1       REV 01   740-031980   AJ40JS8           SFP+-10G-SR
  PIC 1                   BUILTIN      BUILTIN           1X100GE CFP2 OTN
  PIC 2                   BUILTIN      BUILTIN           2X10GE SFPP OTN
    Xcvr 0       REV 01   740-031980   153363A00593      SFP+-10G-SR
    Xcvr 1       REV 01   740-031980   AJ40JUJ           SFP+-10G-SR
  PIC 3                   BUILTIN      BUILTIN           1X100GE CFP2 OTN
    Xcvr 0                NON-JNPR     UQC0B53           CFP2-100G-LR4-D
FPC 2            REV 26   750-046005   CACN1891          MPC5E 3D Q 2CGE+4XGE
  CPU            REV 09   711-045719   CACN8694          RMPC PMB
PIC 0                   BUILTIN      BUILTIN           2X10GE SFPP OTN
    Xcvr 0                NON-JNPR     URA012A           SFP+-10G-LR
  PIC 1                   BUILTIN      BUILTIN           1X100GE CFP2 OTN
    Xcvr 0                NON-JNPR     J13F47042         CFP2-100G-LR4-D
  PIC 2                   BUILTIN      BUILTIN           2X10GE SFPP OTN
    Xcvr 0       REV 01   740-031980   AJC0BM3           SFP+-10G-SR
    Xcvr 1       REV 01   740-021308   11T511100917      SFP+-10G-SR
  PIC 3                   BUILTIN      BUILTIN           1X100GE CFP2 OTN
    Xcvr 0                NON-JNPR     UQK07SU           CFP2-100G-LR4-D
FPC 3            REV 03   750-045372   CAAD9425          MPCE Type 3 3D
  CPU            REV 08   711-035209   CAAD9094          HMPC PMB 2G
  MIC 0          REV 14   750-033196   CAAW9204          1X100GE CXP
    PIC 0                 BUILTIN      BUILTIN           1X100GE CXP
      Xcvr 0     REV 01   740-046563   XD16FC034         CFP2-100G-SR10
  MIC 1          REV 19   750-033199   CAAJ1814          1X100GE CFP
    PIC 2                 BUILTIN      BUILTIN           1X100GE CFP
FPC 4            REV 21.0.11 750-045715 CAAY3568         MPC5E 3D Q 24XGE+6XLGE
  CPU            REV 07   711-045719   CAAW7430          RMPC PMB
  PIC 0                   BUILTIN      BUILTIN           12X10GE SFPP OTN
    Xcvr 0       REV 01   740-031980   AP406NG           SFP+-10G-SR
    Xcvr 1       REV 01   740-021308   AR41NLP           SFP+-10G-SR
    Xcvr 2       REV 01   740-031980   B11D05630         SFP+-10G-SR
  PIC 1                   BUILTIN      BUILTIN           12X10GE SFPP OTN
  PIC 2                   BUILTIN      BUILTIN           3X40GE QSFPP
  PIC 3                   BUILTIN      BUILTIN           3X40GE QSFPP
  WAN MEZZ       REV 12   750-049136   CACM6678          MPC5E 24XGE OTN Mezz
FPC 5            REV 11   750-045372   CABK7539          MPCE Type 3 3D
  CPU            REV 08   711-035209   CABJ2466          HMPC PMB 2G
  MIC 0          REV 19   750-033199   CAAJ9719          1X100GE CFP
    PIC 0                 BUILTIN      BUILTIN           1X100GE CFP
      Xcvr 0     REV 01   740-035329   UP1020P           CFP-100G-SR10
  MIC 1          REV 07   750-033196   YZ0797            1X100GE CXP
    PIC 2                 BUILTIN      BUILTIN           1X100GE CXP
```

```
      Xcvr 0      REV 01   740-046563   XC42FC022         CFP2-100G-SR10
Fan Tray                                                   Enhanced Left Fan Tray
```

show chassis hardware extensive (MX480 Routers with MPC5E and Built-In OTN PIC)

```
user@host> show chassis hardware extensive
Hardware inventory:
Item             Version  Part number  Serial number     Description
Chassis                                JN11C0338AFB      MX480
 Jedec Code:   0x7fb0            EEPROM Version:    0x02
                                 S/N:               JN11C0338AFB
 Assembly ID:  0x01fe            Assembly Version:  00.00
 Date:         00-00-0000        Assembly Flags:    0x02
 ID: MX480
 Board Information Record:
  Address 0x00: 00 00 00 00 00 00 00 00 00 00 00 00 00 00 00 00
 I2C Hex Data:
  Address 0x00: 7f b0 02 ff 01 fe 00 00 00 00 00 00 00 00 00 00
  Address 0x10: 00 00 00 00 00 00 00 00 00 00 00 00 00 00 00 00
  Address 0x20: 4a 4e 31 31 43 30 33 33 38 41 46 42 02 00 00 00
  Address 0x30: 00 00 00 ff 00 00 00 00 00 00 00 00 00 00 00 00
  Address 0x40: 00 00 00 00 00 00 00 00 00 00 00 00 00 00 00 00
  Address 0x50: 00 00 00 00 00 00 00 00 00 00 00 00 00 00 00 00
  Address 0x60: 00 00 00 00 00 00 00 00 00 00 00 00 00 00 00 00
  Address 0x70: 00 00 00 00 00 00 00 00 00 00 00 00 00 00 00 00
Midplane         REV 05   710-017414   ABAB8430          MX480 Midplane
 Jedec Code:   0x7fb0            EEPROM Version:    0x01
 P/N:          710-017414        S/N:               ABAB8430
 Assembly ID:  0x01fe            Assembly Version:  01.05
 Date:         12-13-2011        Assembly Flags:    0x00
 Version:      REV 05
 ID: MX480 Midplane              FRU Model Number:  CHAS-BP-MX480-S
 Board Information Record:
  Address 0x00: ad 01 08 00 00 23 9c fc 98 00 ff ff ff ff ff ff
 I2C Hex Data:
  Address 0x00: 7f b0 01 ff 01 fe 01 05 52 45 56 20 30 35 00 00
  Address 0x10: 00 00 00 00 37 31 30 2d 30 31 37 34 31 34 00 00
  Address 0x20: 53 2f 4e 20 41 42 41 42 38 34 33 30 00 0d 0c 07
  Address 0x30: db ff ff ff ad 01 08 00 00 23 9c fc 98 00 ff ff
  Address 0x40: ff ff ff ff 01 00 00 00 00 00 00 00 00 00 00 43
  Address 0x50: 48 41 53 2d 42 50 2d 4d 58 34 38 30 2d 53 00 00
  Address 0x60: 00 00 00 00 00 00 ff ff ff ff ff ff ff ff ff ff
  Address 0x70: ff ff ff ff ff ff ff ff ff ff ff ff ff ff ff ff
FPM Board        REV 02   710-017254   ZS8005            Front Panel Display
 Jedec Code:   0x7fb0            EEPROM Version:    0x01
 P/N:          710-017254        S/N:               ZS8005
 Assembly ID:  0x01ff            Assembly Version:  01.02
 Date:         11-21-2011        Assembly Flags:    0x00
 Version:      REV 02
 ID: Front Panel Display         FRU Model Number:  CRAFT-MX480-S
 Board Information Record:
  Address 0x00: ff ff ff ff ff ff ff ff ff ff ff ff ff ff ff ff
 I2C Hex Data:
  Address 0x00: 7f b0 01 ff 01 ff 01 02 52 45 56 20 30 32 00 00
  Address 0x10: 00 00 00 00 37 31 30 2d 30 31 37 32 35 34 00 00
  Address 0x20: 53 2f 4e 20 5a 53 38 30 30 35 00 00 00 15 0b 07
  Address 0x30: db ff ff ff ff ff ff ff ff ff ff ff ff ff ff ff
  Address 0x40: ff ff ff ff 01 00 00 00 00 00 00 00 00 00 00 43
  Address 0x50: 52 41 46 54 2d 4d 58 34 38 30 2d 53 00 00 00 00
  Address 0x60: 00 00 00 00 00 00 ff ff ff ff ff ff ff ff ff ff
```

```
  Address 0x70: ff ff ff ff ff ff ff ff ff ff ff ff ff ff ff ff
PEM 0            Rev 05   740-029970   QCS1024U089       PS 1.4-2.52kW; 90-264V
AC in
 Jedec Code:   0x7fb0            EEPROM Version:    0x01
 P/N:          740-029970        S/N:               QCS1024U089
 Assembly ID:  0x0432            Assembly Version:  01.05
 Date:         06-17-2010        Assembly Flags:    0x00
 Version:      Rev 05
 ID: PS 1.4-2.52kW; 90-264V AC in FRU Model Number:  PWR-MX480-2520-AC-S
 Board Information Record:
  Address 0x00: ff ff ff ff ff ff ff ff ff ff ff ff 00 00 00 00
 I2C Hex Data:
  Address 0x00: 7f b0 01 ff 04 32 01 05 52 65 76 20 30 35 00 00
  Address 0x10: 00 00 00 00 37 34 30 2d 30 32 39 39 37 30 00 00
  Address 0x20: 51 43 53 31 30 32 34 55 30 38 39 00 00 11 06 07
  Address 0x30: da ff ff ff ff ff ff ff ff ff ff ff ff ff ff ff
  Address 0x40: 00 00 00 00 01 00 00 00 00 00 00 00 00 00 00 50
  Address 0x50: 57 52 2d 4d 58 34 38 30 2d 32 35 32 30 2d 41 43
  Address 0x60: 2d 53 00 00 00 00 00 00 00 00 00 00 00 00 00 00
  Address 0x70: 00 00 00 00 00 00 00 00 00 00 00 00 00 00 00 00
PEM 1            Rev 10   740-029970   QCS1314U0FJ       PS 1.4-2.52kW; 90-264V
AC in
 Jedec Code:   0x7fb0            EEPROM Version:    0x01
 P/N:          740-029970        S/N:               QCS1314U0FJ
 Assembly ID:  0x0432            Assembly Version:  01.10
 Date:         04-04-2013        Assembly Flags:    0x00
 Version:      Rev 10
 ID: PS 1.4-2.52kW; 90-264V AC in FRU Model Number:  PWR-MX480-2520-AC-S
 Board Information Record:
  Address 0x00: ff ff ff ff ff ff ff ff ff ff ff ff 00 00 00 00
 I2C Hex Data:
  Address 0x00: 7f b0 01 ff 04 32 01 0a 52 65 76 20 31 30 00 00
  Address 0x10: 00 00 00 00 37 34 30 2d 30 32 39 39 37 30 00 00
  Address 0x20: 51 43 53 31 33 31 34 55 30 46 4a 00 00 04 04 07
  Address 0x30: dd ff ff ff ff ff ff ff ff ff ff ff ff ff ff ff
  Address 0x40: 00 00 00 00 01 00 00 00 00 00 00 00 00 00 00 50
  Address 0x50: 57 52 2d 4d 58 34 38 30 2d 32 35 32 30 2d 41 43
  Address 0x60: 2d 53 00 00 00 00 00 00 00 00 00 00 00 00 00 00
  Address 0x70: 00 00 00 00 00 00 00 00 00 00 00 00 00 00 00 00
PEM 2            Rev 07   740-029970   QCS1121U076       PS 1.4-2.52kW; 90-264V
AC in
 Jedec Code:   0x7fb0            EEPROM Version:    0x01
 P/N:          740-029970        S/N:               QCS1121U076
 Assembly ID:  0x0432            Assembly Version:  01.07
 Date:         05-23-2011        Assembly Flags:    0x00
 Version:      Rev 07
 ID: PS 1.4-2.52kW; 90-264V AC in FRU Model Number:  PWR-MX480-2520-AC-S
 Board Information Record:
  Address 0x00: ff ff ff ff ff ff ff ff ff ff ff ff 00 00 00 00
 I2C Hex Data:
  Address 0x00: 7f b0 01 ff 04 32 01 07 52 65 76 20 30 37 00 00
  Address 0x10: 00 00 00 00 37 34 30 2d 30 32 39 39 37 30 00 00
  Address 0x20: 51 43 53 31 31 32 31 55 30 37 36 00 00 17 05 07
  Address 0x30: db ff ff ff ff ff ff ff ff ff ff ff ff ff ff ff
  Address 0x40: 00 00 00 00 01 00 00 00 00 00 00 00 00 00 00 50
  Address 0x50: 57 52 2d 4d 58 34 38 30 2d 32 35 32 30 2d 41 43
  Address 0x60: 2d 53 00 00 00 00 00 00 00 00 00 00 00 00 00 00
  Address 0x70: 00 00 00 00 00 00 00 00 00 00 00 00 00 00 00 00
Routing Engine 0 REV 05   740-031116   9009092471        RE-S-1800x4
 Jedec Code:   0x7fb0            EEPROM Version:    0x02
 P/N:          740-031116        S/N:               9009092471
```

```
 Assembly ID:  0x09c0            Assembly Version:  01.05
 Date:         11-01-2011        Assembly Flags:    0x00
 Version:      REV 05            CLEI Code:         COUCALDBAA
 ID: RE-S-1800x4                 FRU Model Number:  RE-S-1800X4-16G-S
 Board Information Record:
  Address 0x00: 54 32 30 32 37 43 41 2d 34 32 46 42 23 23 23 00
 I2C Hex Data:
  Address 0x00: 7f b0 02 ff 09 c0 01 05 52 45 56 20 30 35 00 00
  Address 0x10: 00 00 00 00 37 34 30 2d 30 33 31 31 31 36 00 00
  Address 0x20: 39 30 30 39 30 39 32 34 37 31 00 00 00 01 0b 07
  Address 0x30: db ff ff ff 54 32 30 32 37 43 41 2d 34 32 46 42
  Address 0x40: 23 23 23 00 01 43 4f 55 43 41 4c 44 42 41 41 52
  Address 0x50: 45 2d 53 2d 31 38 30 30 58 34 2d 31 36 47 2d 53
  Address 0x60: 00 00 00 00 00 00 41 30 30 ff ff ff ff ff ff ff
  Address 0x70: ff ff ff 4b ff ff ff ff ff ff ff ff ff ff ff ff
  ad0    3896 MB  VRFCF14096DIHK1      VM4096MB 6862     Compact Flash
  ad1   30533 MB  UGB94ARF32H0S3-KC    UNIGEN-478612-001127 Disk 1
  usb0 (addr 1)  EHCI root hub 0       Intel             uhub0
  usb0 (addr 2)  product 0x0020 32     vendor 0x8087     uhub1
  DIMM 0         SGU04G72H1BB2SA-BB DIE REV-52 PCB REV-54 MFR ID-ce80
  DIMM 1         SGU04G72H1BB2SA-BB DIE REV-52 PCB REV-54 MFR ID-ce80
  DIMM 2         SGU04G72H1BB2SA-BB DIE REV-52 PCB REV-54 MFR ID-ce80
  DIMM 3         SGU04G72H1BB2SA-BB DIE REV-52 PCB REV-54 MFR ID-ce80
Routing Engine 1 REV 05   740-031116   9009097958        RE-S-1800x4
 Jedec Code:   0x7fb0            EEPROM Version:    0x02
 P/N:          740-031116        S/N:               9009097958
 Assembly ID:  0x09c0            Assembly Version:  01.05
 Date:         02-06-2012        Assembly Flags:    0x00
 Version:      REV 05            CLEI Code:         COUCALDBAA
 ID: RE-S-1800x4                 FRU Model Number:  RE-S-1800X4-16G-S
 Board Information Record:
  Address 0x00: 54 32 30 32 37 43 41 2d 34 32 46 42 23 23 23 00
 I2C Hex Data:
  Address 0x00: 7f b0 02 ff 09 c0 01 05 52 45 56 20 30 35 00 00
  Address 0x10: 00 00 00 00 37 34 30 2d 30 33 31 31 31 36 00 00
  Address 0x20: 39 30 30 39 30 39 37 39 35 38 00 00 00 06 02 07
  Address 0x30: dc ff ff ff 54 32 30 32 37 43 41 2d 34 32 46 42
  Address 0x40: 23 23 23 00 01 43 4f 55 43 41 4c 44 42 41 41 52
  Address 0x50: 45 2d 53 2d 31 38 30 30 58 34 2d 31 36 47 2d 53
  Address 0x60: 00 00 00 00 00 00 41 30 30 ff ff ff ff ff ff ff
  Address 0x70: ff ff ff 4b ff ff ff ff ff ff ff ff ff ff ff ff
  ad0    3896 MB  VRFCF14096DIHK1      VM4096MB 6145     Compact Flash
  ad1   30533 MB  UGB94ARF32H0S3-KC    UNIGEN-499551-000273 Disk 1

...
```

show chassis hardware (MX960 Router)

```
user@host> show chassis hardware
Hardware inventory:
Item             Version  Part number  Serial number     Description
Chassis                                                  MX960
Midplane         REV 01   710-013698   AA6082            MX960 Midplane
PIM              Rev 01   740-013110   000008            Power Inlet Module
PEM 2
PEM 3            Rev 01   740-013682   000038            PS 1.7kW; 200-240VAC in
Routing Engine 0 REV 00   740-015113   1000617944        RE-S-1300
CB 0             REV 05   710-013725   JK6947            MX960 Test SCB
FPC 4            REV 01   710-013305   JM7617            MX960 Test DPC
  CPU
  PIC 0                   BUILTIN      BUILTIN           1x 10GE(LAN/WAN)
```

```
  PIC 1                    BUILTIN      BUILTIN           10x 1GE
FPC 7            REV 01   710-013305   JL9634            MX960 Test DPC
  CPU
  PIC 0                    BUILTIN      BUILTIN           1x 10GE(LAN/WAN)
    Xcvr 0                 NON-JNPR     MYBG65I82C        XFP-10G-SR
  PIC 1                    BUILTIN      BUILTIN           10x 1GE
    Xcvr 1       REV 01   740-011782   P7N0368           SFP-SX
    Xcvr 4       REV 01   740-011782   P8J1W27           SFP-SX
    Xcvr 6       REV 01   740-011782   P8J1VSD           SFP-SX
    Xcvr 9       REV 01   740-011782   P8J1W25           SFP-SX
Fan Tray 0
Fan Tray 1
```

show chassis hardware (MX960 Router with Bidirectional Optics)

```
user@host> show chassis hardware
Hardware inventory:
Item             Version  Part number  Serial number     Description
Chassis                                JN10BA5B9AFA      MX960
Midplane         REV 03   710-013698   TR0234            MX960 Backplane
FPM Board        REV 03   710-014974   JA0878            Front Panel Display
PDM             Rev 03   740-013110   QCS11135028       Power Distribution Module
PEM 0            Rev 03   740-013682   QCS11154036       PS 1.7kW; 200-240VAC in
PEM 1            Rev 03   740-013682   QCS11154010       PS 1.7kW; 200-240VAC in
PEM 2            Rev 03   740-013682   QCS11154022       PS 1.7kW; 200-240VAC in
Routing Engine 0 REV 06   740-013063   1000691458        RE-S-2000
CB 0             REV 07   710-013385   KA2190            MX SCB
CB 1             REV 07   710-013385   KA0837            MX SCB
FPC 3            REV 02   750-018122   KB3890            DPCE 40x 1GE R
  CPU
FPC 4            REV 01   750-018122   KB3889            DPCE 40x 1GE R
  CPU            REV 06   710-013713   KB3976            DPC PMB
  PIC 0                    BUILTIN      BUILTIN           10x 1GE(LAN)
    Xcvr 1       REV 01   740-020426   4910549           SFP-1000BASE-BX40-D
    Xcvr 2       REV 01   740-020426   4910551           SFP-1000BASE-BX40-D
    Xcvr 5       REV 01   740-021340   77E245N00006      SFP-1000BASE-BX10-U
    Xcvr 6       REV 01   740-020425   4882821           SFP-1000BASE-BX40-U
    Xcvr 8       REV 01   740-020425   4882820           SFP-1000BASE-BX40-U
  PIC 1                    BUILTIN      BUILTIN           10x 1GE(LAN)
    Xcvr 0       REV 01   740-020465   77E555N00894      SFP-1000BASE-BX10-D
    Xcvr 1       REV 01   740-020465   75E467X00818      SFP-1000BASE-BX10-D
    Xcvr 2       REV 01   740-020465   75E467X00573      SFP-1000BASE-BX10-D
    Xcvr 3       REV 01   740-020465   4888227           SFP-1000BASE-BX10-D
    Xcvr 4       REV 01   740-020465   4888241           SFP-1000BASE-BX10-D
    Xcvr 5       REV 01   740-021340   77E245N00005      SFP-1000BASE-BX10-U
    Xcvr 6       REV 01   740-021340   76E245X00487      SFP-1000BASE-BX10-U
    Xcvr 7       REV 01   740-021341   5255889           SFP-1000BASE-BX10-U
    Xcvr 8       REV 01   740-021341   5255887           SFP-1000BASE-BX10-U
    Xcvr 9       REV 01   740-021340   77E245N00004      SFP-1000BASE-BX10-U
  PIC 2                    BUILTIN      BUILTIN           10x 1GE(LAN)
    Xcvr 0       REV 01   740-020424   5007582           SFP-1000BASE-BX10-D
    Xcvr 1       REV 01   740-020424   4888187           SFP-1000BASE-BX10-D
    Xcvr 2       REV 01   740-020424   4656500           SFP-1000BASE-BX10-D
    Xcvr 5       REV 01   740-021341   5255886           SFP-1000BASE-BX10-U
    Xcvr 7       REV 01   740-021340   77E245N00003      SFP-1000BASE-BX10-U
    Xcvr 8       REV 01   740-021341   5255888           SFP-1000BASE-BX10-U
  PIC 3                    BUILTIN      BUILTIN           10x 1GE(LAN)
    Xcvr 0       REV 01   740-017726   74S184H30341      SFP-EX
    Xcvr 1       REV 01   740-017726   4814061           SFP-EX
    Xcvr 5       REV 01   740-017726   6ZS184H31108      SFP-EX
    Xcvr 9       REV 01   740-021340   76E245X00486      SFP-1000BASE-BX10-U
```

```
Fan Tray 0
Fan Tray 1       REV 03   740-014971   TP0850            Fan Tray
```

show chassis hardware (MX960 Router with Enhanced MX SCB)

```
user@host> show chassis hardware
Hardware inventory:
Item             Version  Part number  Serial number     Description
Chassis                                JN1096805AFA      MX960
Midplane         REV 03   710-013698   TR0183            MX960 Backplane
Fan Extender     REV 02   710-018051   JY5227            Extended Cable Manager
FPM Board        REV 03   710-014974   JZ6876            Front Panel Display
PDM             Rev 03   740-013110   QCS11035023       Power Distribution Module
PEM 1            Rev 03   740-013682   QCS1109400L       PS 1.7kW; 200-240VAC in
PEM 2            Rev 03   740-013682   QCS11094015       PS 1.7kW; 200-240VAC in
PEM 3            Rev 03   740-013682   QCS11094012       PS 1.7kW; 200-240VAC in
Routing Engine 0 REV 06   740-013063   1000687969        RE-S-2000
Routing Engine 1 REV 06   740-013063   1000687955        RE-S-2000
CB 0             REV 11   750-031391   YZ6072            Enhanced MX SCB
CB 1             REV 11   750-031391   YZ6068            Enhanced MX SCB
CB 2             REV 11   750-031391   YZ6081            Enhanced MX SCB
FPC 0            REV 01   750-018122   KA5576            DPCE 40x 1GE R
  CPU            REV 06   710-013713   KB3961            DPC PMB
  PIC 0                   BUILTIN      BUILTIN           10x 1GE(LAN)
    Xcvr 0       REV 01   740-011613   P9F18GF           SFP-SX
    Xcvr 2       REV 01   740-011782   P9M0TL9           SFP-SX
    Xcvr 7       REV 01   740-011782   P9P0XXH           SFP-SX
    Xcvr 9       REV 01   740-011782   P9M0TN1           SFP-SX
  PIC 1                   BUILTIN      BUILTIN           10x 1GE(LAN)
    Xcvr 0       REV 01   740-011613   PAJ4UHC           SFP-SX
  PIC 2                   BUILTIN      BUILTIN           10x 1GE(LAN)
    Xcvr 0       REV 01   740-011613   PFF2CD0           SFP-SX
    Xcvr 1       REV 01   740-011613   PBG3ZUT           SFP-SX
    Xcvr 2       REV 01   740-011613   PFF2DDV           SFP-SX
    Xcvr 5       REV 01   740-011613   P8E2SST           SFP-SX
    Xcvr 9       REV 01   740-011782   PB8329N           SFP-SX
  PIC 3                   BUILTIN      BUILTIN           10x 1GE(LAN)
    Xcvr 0       REV 01   740-026192   1U0201084503342   SFP-100BASE-BX10-U
    Xcvr 1       REV 01   740-026193   1U1201084503313   SFP-100BASE-BX10-D
    Xcvr 2       REV 01   740-011613   PAJ4Y5B           SFP-SX
    Xcvr 6       REV 01   740-011782   P9M0U3M           SFP-SX
    Xcvr 7       REV 01   740-011782   P9M0TLA           SFP-SX
FPC 1            REV 16   750-031089   YL0719            MPC Type 2 3D
  CPU            REV 06   711-030884   YL1463            MPC PMB 2G
  MIC 0          REV 07   750-028387   JR6500            3D 4x 10GE  XFP
    PIC 0                 BUILTIN      BUILTIN           2x 10GE  XFP
      Xcvr 0     REV 01   740-014279   733019A00154      XFP-10G-LR
      Xcvr 1     REV 02   740-014289   T09F55034         XFP-10G-SR
    PIC 1                 BUILTIN      BUILTIN           2x 10GE  XFP
      Xcvr 0     REV 01   740-014279   913019B00791      XFP-10G-LR
      Xcvr 1     REV 01   740-014289   98S803A90384      XFP-10G-SR
  MIC 1          REV 24   750-028387   YJ3950            3D 4x 10GE  XFP
    PIC 2                 BUILTIN      BUILTIN           2x 10GE  XFP
      Xcvr 0     REV 02   740-014279   T10B36134         XFP-10G-LR
      Xcvr 1     REV 01   740-014289   T07M86354         XFP-10G-SR
    PIC 3                 BUILTIN      BUILTIN           2x 10GE  XFP
FPC 2            REV 08   710-014219   JY9654            DPCE 4x 10GE R
  CPU            REV 06   710-013713   JZ6549            DPC PMB
  PIC 0                   BUILTIN      BUILTIN           1x 10GE(LAN/WAN)
  PIC 1                   BUILTIN      BUILTIN           1x 10GE(LAN/WAN)
  PIC 2                   BUILTIN      BUILTIN           1x 10GE(LAN/WAN)
```

```
    Xcvr 0       REV 03   740-011571   C931BK028         XFP-10G-SR
  PIC 3                   BUILTIN      BUILTIN           1x 10GE(LAN/WAN)
FPC 3            REV 10   750-024199   XJ6692            MX FPC Type 3
  CPU            REV 03   710-022351   XF5182            DPC PMB
  PIC 0          REV 17   750-009553   RJ2945            4x OC-48 SONET
    Xcvr 1       REV 01   740-011785   PCP3YLL           SFP-SR
    Xcvr 3       REV 01   740-011785   PDS0MRY           SFP-SR
  PIC 1          REV 32   750-003700   DP2113            1x OC-192 12xMM VSR
FPC 5            REV 25   750-028467   YM8256            MPC 3D 16x 10GE
  CPU            REV 10   711-029089   YL3029            AMPC PMB
  PIC 0                   BUILTIN      BUILTIN           4x 10GE(LAN) SFP+
    Xcvr 1       REV 01   740-031980   AHN0X1Z           SFP+-10G-SR
  PIC 1                   BUILTIN      BUILTIN           4x 10GE(LAN) SFP+
  PIC 2                   BUILTIN      BUILTIN           4x 10GE(LAN) SFP+
  PIC 3                   BUILTIN      BUILTIN           4x 10GE(LAN) SFP+
FPC 7            REV 02   750-031092   JR6658            MPC Type 1 3D Q
  CPU            REV 01   711-030884   JZ9038            MPC PMB 2G
  MIC 0          REV 08   750-028392   JZ8737            3D 20x 1GE(LAN) SFP
    PIC 0                 BUILTIN      BUILTIN           10x 1GE(LAN) SFP
      Xcvr 0     REV 01   740-011782   PBE2C6Y           SFP-SX
      Xcvr 2              NON-JNPR     U8105N8           SFP-SX
      Xcvr 4     REV 01   740-011613   PFM18EF           SFP-SX
      Xcvr 7     REV 01   740-011613   PFF2AM8           SFP-SX
      Xcvr 8     REV 01   740-011613   PFF2CT6           SFP-SX
    PIC 1                 BUILTIN      BUILTIN           10x 1GE(LAN) SFP
      Xcvr 0     REV 01   740-011782   PB82VHH           SFP-SX
      Xcvr 1     REV 01   740-011613   PFF2CSW           SFP-SX
      Xcvr 9     REV 01   740-011613   PFF2BY0           SFP-SX
  QXM 0          REV 04   711-028408   JR6372            MPC QXM
FPC 8            REV 05   750-024387   JW9754            MX FPC Type 2
  CPU            REV 03   710-022351   KF1651            DPC PMB
  PIC 0          REV 08   750-014730   DM3664            4x OC-3 1x OC-12 SFP
    Xcvr 0       REV 01   740-016065   81S290N00077      SFP-SR
    Xcvr 1                NON-JNPR     2191844           SFP-SR
    Xcvr 2       REV 01   740-011618   PD81EE5           SFP-IR
  PIC 1          REV 08   750-014637   DM3671            4x OC-12-3 SFP
    Xcvr 0       REV 01   740-011785   PCK3UNK           SFP-SR
    Xcvr 3       REV 01   740-011785   PDS0MPZ           SFP-SR
FPC 10           REV 04   710-013699   JY4654            DPCE 40x 1GE R
  CPU            REV 05   710-013713   JS9717            DPC PMB
  PIC 0                   BUILTIN      BUILTIN           10x 1GE(LAN)
    Xcvr 5       REV 01   740-011782   PAR1L72           SFP-SX
    Xcvr 6       REV 01   740-011782   P8N1YQ4           SFP-SX
  PIC 1                   BUILTIN      BUILTIN           10x 1GE(LAN)
  PIC 2                   BUILTIN      BUILTIN           10x 1GE(LAN)
    Xcvr 0       REV 01   740-011782   P8Q2AVL           SFP-SX
    Xcvr 5       REV 01   740-011782   PAR1L7B           SFP-SX
    Xcvr 6       REV 01   740-011782   PAR1L2J           SFP-SX
    Xcvr 8       REV 01   740-011782   P8N1YMY           SFP-SX
  PIC 3                   BUILTIN      BUILTIN           10x 1GE(LAN)
Fan Tray 0       REV 03   740-014971   TP0567            Fan Tray
Fan Tray 1       REV 03   740-014971   TP0702            Fan Tray
```

show chassis hardware models (MX960 Router with Enhanced MX SCB)

```
user@host> show chassis hardware models
Hardware inventory:
Item             Version  Part number  Serial number     FRU model number
Midplane         REV 03   710-013698   TR0183            CHAS-BP-MX960-S
Fan Extender     REV 02   710-018051   JY5227            ECM-MX960
FPM Board        REV 03   710-014974   JZ6876            CRAFT-MX960-S
```

```
Routing Engine 0 REV 06   740-013063   1000687969        RE-S-2000-4096-S
Routing Engine 1 REV 06   740-013063   1000687955        RE-S-2000-4096-S
CB 0             REV 11   750-031391   YZ6072            SCBE-MX-S
CB 1             REV 11   750-031391   YZ6068            SCBE-MX-S
CB 2             REV 11   750-031391   YZ6081            SCBE-MX-S
FPC 0            REV 01   750-018122   KA5576            DPCE-R-40GE-SFP
FPC 1            REV 16   750-031089   YL0719            MX-MPC2-3D
  MIC 0          REV 07   750-028387   JR6500            MIC-3D-4XGE-XFP
  MIC 1          REV 24   750-028387   YJ3950            MIC-3D-4XGE-XFP
FPC 2            REV 08   710-014219   JY9654            DPC-R-4XGE-XFP
FPC 3            REV 10   750-024199   XJ6692            MX-FPC3
  PIC 0          REV 17   750-009553   RJ2945            PC-4OC48-SON-SFP
  PIC 1          REV 32   750-003700   DP2113            PC-1OC192-SON-VSR
FPC 5            REV 25   750-028467   YM8256            MPC-3D-16XGE-SFPP
FPC 7            REV 02   750-031092   JR6658            MX-MPC1-3D-Q
  MIC 0          REV 08   750-028392   JZ8737            MIC-3D-20GE-SFP
FPC 8            REV 05   750-024387   JW9754            MX-FPC2
  PIC 0          REV 08   750-014730   DM3664            PB-4OC3-1OC12-SON2-SFP
  PIC 1          REV 08   750-014637   DM3671            PB-4OC3-4OC12-SON-SFP
FPC 10           REV 04   710-013699   JY4654            DPC-R-40GE-SFP
Fan Tray 0       REV 03   740-014971   TP0567            FFANTRAY-MX960-S
Fan Tray 1       REV 03   740-014971   TP0702            FFANTRAY-MX960-S
```

show chassis hardware (MX960 Router with MPC5EQ)

```
user@host> show chassis hardware
Hardware inventory:
Item             Version  Part number  Serial number     Description
Chassis                                JN1214852AFA      MX960
Midplane         REV 01   710-030012   ACAX3674          MX960 Backplane
FPM Board        REV 03   710-014974   CAAZ9326          Front Panel Display
PDM             Rev 03   740-013110   QCS17025017       Power Distribution Module
PEM 0            Rev 10   740-027760   QCS1702N062       PS 4.1kW; 200-240V AC
in
PEM 1            Rev 04   740-027760   QCS1422N02C       PS 4.1kW; 200-240V AC
in
PEM 2            Rev 09   740-027760   QCS1614N01X       PS 4.1kW; 200-240V AC
in
Routing Engine 0 REV 08   740-031116   9009131803        RE-S-1800x4
Routing Engine 1 REV 08   740-031116   9009124913        RE-S-1800x4
CB 0             REV 18   750-031391   CABF0579          Enhanced MX SCB
CB 1             REV 16   750-031391   CAAZ2471          Enhanced MX SCB
CB 2             REV 16   750-031391   CAAW9595          Enhanced MX SCB
FPC 0            REV 18   750-046005   CACE6574          MPC5E 3D Q 2CGE+4XGE
  CPU            REV 09   711-045719   CACG8908          RMPC PMB
  PIC 0                   BUILTIN      BUILTIN           2X10GE SFPP OTN
    Xcvr 0       REV 01   740-021308   AQA0DYT           SFP+-10G-SR
    Xcvr 1       REV 01   740-021308   AQG0MS7           SFP+-10G-SR
  PIC 1                   BUILTIN      BUILTIN           1X100GE CFP2 OTN
    Xcvr 0       REV 01   740-046563   XD16FC03Z         CFP2-100G-SR10
  PIC 2                   BUILTIN      BUILTIN           2X10GE SFPP OTN
    Xcvr 0       REV 01   740-021308   ANA0NAJ           SFP+-10G-SR
    Xcvr 1       REV 01   740-021308   AQG0MRQ           SFP+-10G-SR
  PIC 3                   BUILTIN      BUILTIN           1X100GE CFP2 OTN
    Xcvr 0       REV 01   740-049775   J13K72993         CFP2-100G-LR4
FPC 1            REV 11   750-045372   CABK8154          MPCE Type 3 3D
  CPU            REV 08   711-035209   CABE7370          HMPC PMB 2G
  MIC 0          REV 07   750-033307   CABD5255          10X10GE SFPP
    PIC 0                 BUILTIN      BUILTIN           10X10GE SFPP
      Xcvr 0     REV 01   740-021308   AQ50319           SFP+-10G-SR
      Xcvr 1     REV 01   740-021308   AQ5035V           SFP+-10G-SR
```

```
      Xcvr 2     REV 01   740-021308   AQ502XJ           SFP+-10G-SR
      Xcvr 3     REV 01   740-021308   AQ43HHR           SFP+-10G-SR
      Xcvr 4     REV 01   740-021308   AQ502YA           SFP+-10G-SR
      Xcvr 5     REV 01   740-021308   AQ502EU           SFP+-10G-SR
      Xcvr 6     REV 01   740-021308   AQ502HR           SFP+-10G-SR
      Xcvr 7     REV 01   740-021308   AQ502A6           SFP+-10G-SR
      Xcvr 8     REV 01   740-021308   AQ43H8M           SFP+-10G-SR
  MIC 1          REV 14   750-033196   CAAP1398          1X100GE CXP
    PIC 2                 BUILTIN      BUILTIN           1X100GE CXP
      Xcvr 0     REV 01   740-046563   XD16FC064         CFP-100G-SR10
FPC 3            REV 35   750-028467   CAAT9156          MPC 3D 16x 10GE
  CPU            REV 11   711-029089   CAAV4645          AMPC PMB
  PIC 0                   BUILTIN      BUILTIN           4x 10GE(LAN) SFP+
    Xcvr 0       REV 01   740-021308   AQ43HZ1           SFP+-10G-SR
    Xcvr 1       REV 01   740-021308   AQ43HZC           SFP+-10G-SR
    Xcvr 2       REV 01   740-021308   AQ43HD2           SFP+-10G-SR
    Xcvr 3       REV 01   740-021308   AQ502HN           SFP+-10G-SR
  PIC 1                   BUILTIN      BUILTIN           4x 10GE(LAN) SFP+
    Xcvr 0       REV 01   740-021308   AQ43HGF           SFP+-10G-SR
    Xcvr 1       REV 01   740-021308   AQ501RZ           SFP+-10G-SR
    Xcvr 2       REV 01   740-021308   AQ5029V           SFP+-10G-SR
    Xcvr 3       REV 01   740-021308   AQ501X9           SFP+-10G-SR
  PIC 2                   BUILTIN      BUILTIN           4x 10GE(LAN) SFP+
    Xcvr 0       REV 01   740-021308   AQ502ZN           SFP+-10G-SR
 Xcvr 1       REV 01   740-021308   AQ43H86           SFP+-10G-SR
    Xcvr 2       REV 01   740-021308   AQ502ZY           SFP+-10G-SR
    Xcvr 3       REV 01   740-021308   AQ502PZ           SFP+-10G-SR
  PIC 3                   BUILTIN      BUILTIN           4x 10GE(LAN) SFP+
    Xcvr 0       REV 01   740-021308   AQ503E6           SFP+-10G-SR
    Xcvr 1       REV 01   740-021308   AQ502XN           SFP+-10G-SR
    Xcvr 2       REV 01   740-031980   B11F00213         SFP+-10G-SR
    Xcvr 3       REV 01   740-021308   AQ50336           SFP+-10G-SR
FPC 4            REV 18   750-046005   CACE6568          MPC5E 3D Q 2CGE+4XGE
  CPU            REV 09   711-045719   CACG8900          RMPC PMB
  PIC 0                   BUILTIN      BUILTIN           2X10GE SFPP OTN
    Xcvr 0       REV 01   740-021308   AQA095A           SFP+-10G-SR
    Xcvr 1       REV 01   740-021308   AQG0M1E           SFP+-10G-SR
  PIC 1                   BUILTIN      BUILTIN           1X100GE CFP2 OTN
    Xcvr 0                NON-JNPR     FE13F000F         CFP2-100G-SR10
  PIC 2                   BUILTIN      BUILTIN           2X10GE SFPP OTN
    Xcvr 0       REV 01   740-021308   AQG0LYC           SFP+-10G-SR
    Xcvr 1       REV 01   740-021308   AQG0LYB           SFP+-10G-SR
  PIC 3                   BUILTIN      BUILTIN           1X100GE CFP2 OTN
    Xcvr 0       REV 01   740-048813   XD32FE00Z         CFP2-100G-SR10
FPC 5            REV 18   750-046005   CACE6577          MPC5E 3D Q 2CGE+4XGE
  CPU            REV 09   711-045719   CACG8902          RMPC PMB
  PIC 0                   BUILTIN      BUILTIN           2X10GE SFPP OTN
    Xcvr 0       REV 01   740-021308   AQG0MXE           SFP+-10G-SR
    Xcvr 1       REV 01   740-021308   AQG0LVY           SFP+-10G-SR
  PIC 1                   BUILTIN      BUILTIN           1X100GE CFP2 OTN
    Xcvr 0       REV 01   740-046563   XD16FC03T         CFP2-100G-SR10
  PIC 2                   BUILTIN      BUILTIN           2X10GE SFPP OTN
    Xcvr 0       REV 01   740-021308   AQG0LW1           SFP+-10G-SR
    Xcvr 1       REV 01   740-021308   AQG0LW3           SFP+-10G-SR
  PIC 3                   BUILTIN      BUILTIN           1X100GE CFP2 OTN
    Xcvr 0                NON-JNPR     FE13F000J         CFP2-100G-SR10
FPC 7            REV 09   750-037355   CAAF0937          MPC4E 3D 2CGE+8XGE
  CPU            REV 08   711-035209   CAAD8004          HMPC PMB 2G
  PIC 0                   BUILTIN      BUILTIN           4x10GE SFPP
    Xcvr 0       REV 01   740-021308   ANA0MM3           SFP+-10G-SR
  PIC 1                   BUILTIN      BUILTIN           1X100GE CFP
```

```
    Xcvr 0       REV 01   740-035329   X000C163          CFP-100G-SR10
  PIC 2                   BUILTIN      BUILTIN           4x10GE SFPP
    Xcvr 0       REV 01   740-021308   AQG0MS6           SFP+-10G-SR
    Xcvr 1       REV 01   740-021308   AQG0MRX           SFP+-10G-SR
    Xcvr 2       REV 01   740-021308   AQG0M6Y           SFP+-10G-SR
    Xcvr 3       REV 01   740-021308   AQG0LZM           SFP+-10G-SR
  PIC 3                   BUILTIN      BUILTIN           1X100GE CFP
    Xcvr 0       REV 01   740-035329   X12J00499         CFP-100G-SR10
FPC 8            REV 39   750-045715   CACD1903          MPC5E 3D Q 24XGE+6XLGE
  CPU            REV 09   711-045719   CACD1815          RMPC PMB
  PIC 0                   BUILTIN      BUILTIN           12X10GE SFPP OTN
  PIC 1                   BUILTIN      BUILTIN           12X10GE SFPP OTN
  PIC 2                   BUILTIN      BUILTIN           3X40GE QSFPP
    Xcvr 0       REV 01   740-046565   QC480289          QSFP+-40G-SR4
    Xcvr 1       REV 01   740-046565   QC480274          QSFP+-40G-SR4
    Xcvr 2       REV 01   740-046565   QD130190          QSFP+-40G-SR4
  PIC 3                   BUILTIN      BUILTIN           3X40GE QSFPP
    Xcvr 0       REV 01   740-046565   QD130197          QSFP+-40G-SR4
    Xcvr 1       REV 01   740-046565   QD130180          QSFP+-40G-SR4
 Xcvr 2       REV 01   740-046565   QD130199          QSFP+-40G-SR4
  WAN MEZZ       REV 09   750-049136   CABN0415          MPC5E 24XGE OTN Mezz
FPC 9            REV 05   750-044444   CAAY9801          MPCE Type 2 3D P
  CPU            REV 04   711-038484   CAAW3673          MPCE PMB 2G
  MIC 0          REV 28   750-028387   CAAX1071          3D 4x 10GE  XFP
    PIC 0                 BUILTIN      BUILTIN           2x 10GE  XFP
      Xcvr 0              NON-JNPR     T12L92342         XFP-10G-SR
      Xcvr 1              NON-JNPR     T12L92303         XFP-10G-SR
    PIC 1                 BUILTIN      BUILTIN           2x 10GE  XFP
      Xcvr 0              NON-JNPR     CC07BK02X         XFP-10G-SR
  QXM 0          REV 06   711-028408   CAAW4883          MPC QXM
  QXM 1          REV 06   711-028408   CAAW4603          MPC QXM
FPC 10           REV 21.0.11 750-045715 CAAY3541         MPC5E 3D Q 24XGE+6XLGE
  CPU            REV 07   711-045719   CAAW7426          RMPC PMB
  PIC 0                   BUILTIN      BUILTIN           12X10GE SFPP
    Xcvr 0       REV 01   740-031980   AHK01AP           SFP+-10G-SR
    Xcvr 1       REV 01   740-021308   AQ502ZU           SFP+-10G-SR
    Xcvr 2       REV 01   740-031980   AP41BLS           SFP+-10G-SR
    Xcvr 3       REV 01   740-021308   AQA08YA           SFP+-10G-SR
    Xcvr 4       REV 01   740-021308   AQA0K26           SFP+-10G-SR
    Xcvr 6       REV 01   740-021308   AQA06S3           SFP+-10G-SR
    Xcvr 7       REV 01   740-021308   AQA06AS           SFP+-10G-SR
    Xcvr 8       REV 01   740-021308   AQA053N           SFP+-10G-SR
    Xcvr 9       REV 01   740-021308   AQA0E97           SFP+-10G-SR
    Xcvr 10      REV 01   740-021308   AQA0GS4           SFP+-10G-SR
    Xcvr 11      REV 01   740-021308   AQA0JVA           SFP+-10G-SR
  PIC 1                   BUILTIN      BUILTIN           12X10GE SFPP
    Xcvr 0       REV 01   740-021308   AQA057A           SFP+-10G-SR
    Xcvr 1       REV 01   740-021308   ANA0MLS           SFP+-10G-SR
    Xcvr 2       REV 01   740-021308   AQA093A           SFP+-10G-SR
    Xcvr 3       REV 01   740-021309   943153A00075      SFP+-10G-LR
    Xcvr 4       REV 01   740-021308   AQA077B           SFP+-10G-SR
    Xcvr 5       REV 01   740-021308   AQA0JSC           SFP+-10G-SR
    Xcvr 6       REV 01   740-021308   AQA0735           SFP+-10G-SR
    Xcvr 7       REV 01   740-021308   AQ5028N           SFP+-10G-SR
    Xcvr 8       REV 01   740-031980   AP40VN5           SFP+-10G-SR
    Xcvr 9       REV 01   740-021308   AQA0K0J           SFP+-10G-SR
    Xcvr 10      REV 01   740-021308   AQA07AP           SFP+-10G-SR
    Xcvr 11      REV 01   740-021308   AQA08YB           SFP+-10G-SR
  PIC 2                   BUILTIN      BUILTIN           3X40GE QSFPP
  PIC 3                   BUILTIN      BUILTIN           3X40GE QSFPP
  WAN MEZZ       REV 07   750-045717   CAAX3123          MPC5E 24XGE Mezz
```

```
FPC 11           REV 17   750-037355   CAAT3986          MPC4E 3D 2CGE+8XGE
  CPU            REV 08   711-035209   CAAR3972          HMPC PMB 2G
  PIC 0                   BUILTIN      BUILTIN           4x10GE SFPP
    Xcvr 0       REV 01   740-021308   AQA0DSE           SFP+-10G-SR
    Xcvr 1       REV 01   740-021308   AQ501Y3           SFP+-10G-SR
    Xcvr 2       REV 01   740-021308   AQ501XU           SFP+-10G-SR
    Xcvr 3       REV 01   740-021308   AQ5036Y           SFP+-10G-SR
  PIC 1                   BUILTIN      BUILTIN           1X100GE CFP
    Xcvr 0                NON-JNPR     X12J00247         CFP-100G-SR10
  PIC 2                   BUILTIN      BUILTIN           4x10GE SFPP
    Xcvr 0       REV 01   740-031980   ALQ1DKF           SFP+-10G-SR
    Xcvr 1       REV 01   740-031980   AJ403YA           SFP+-10G-SR
    Xcvr 2       REV 01   740-031980   AP40TY0           SFP+-10G-SR
    Xcvr 3       REV 01   740-031980   ALQ14G0           SFP+-10G-SR
  PIC 3                   BUILTIN      BUILTIN           1X100GE CFP
    Xcvr 0       REV 01   740-035329   X12J00095         CFP-100G-SR10
Fan Tray 0       REV 08   740-031521   ACAF4219          Enhanced Fan Tray
Fan Tray 1       REV 08   740-031521   ACAF4225          Enhanced Fan Tray
```

show chassis hardware detail (MX960 Router)

```
user@host> show chassis hardware detail
Hardware inventory:
Item             Version  Part number  Serial number     Description
Chassis                                                  MX960
Midplane         REV 01   710-013698   AA6082            MX960 Midplane
PIM              Rev 01   740-013110   000008            Power Inlet Module
PEM 2
PEM 3            Rev 01   740-013682   000038            PS 1.7kW; 200-240VAC in
Routing Engine 0 REV 00   740-015113   1000617944        RE-S-1300
  ad0     245 MB  SanDisk SDCFB-256    111419E1805T1141  Compact Flash
  ad2   38154 MB  FUJITSU MHT2040BH    NR0WT5925N77      Hard Disk
CB 0             REV 05   710-013725   JK6947            MX960 Test SCB
FPC 4            REV 01   710-013305   JM7617            MX960 Test DPC
  CPU
  PIC 0                   BUILTIN      BUILTIN           1x 10GE(LAN/WAN)
  PIC 1                   BUILTIN      BUILTIN           10x 1GE
FPC 7            REV 01   710-013305   JL9634            MX960 Test DPC
  CPU
  PIC 0                   BUILTIN      BUILTIN           1x 10GE(LAN/WAN)
    Xcvr 0                NON-JNPR     MYBG65I82C        XFP-10G-SR
  PIC 1                   BUILTIN      BUILTIN           10x 1GE
    Xcvr 1       REV 01   740-011782   P7N0368           SFP-SX
    Xcvr 4       REV 01   740-011782   P8J1W27           SFP-SX
    Xcvr 6       REV 01   740-011782   P8J1VSD           SFP-SX
    Xcvr 9       REV 01   740-011782   P8J1W25           SFP-SX
Fan Tray 0
Fan Tray 1
```

show chassis hardware detail (MX960 Router with MPC5EQ)

```
user@host> show chassis hardware detail
Hardware inventory:
Item             Version  Part number  Serial number     Description
Chassis                                JN1214852AFA      MX960
Midplane         REV 01   710-030012   ACAX3674          MX960 Backplane
FPM Board        REV 03   710-014974   CAAZ9326          Front Panel Display
PDM             Rev 03   740-013110   QCS17025017       Power Distribution Module
PEM 0            Rev 10   740-027760   QCS1702N062       PS 4.1kW; 200-240V AC
in
```

```
PEM 1            Rev 04   740-027760   QCS1422N02C       PS 4.1kW; 200-240V AC
in
PEM 2            Rev 09   740-027760   QCS1614N01X       PS 4.1kW; 200-240V AC
in
Routing Engine 0 REV 08   740-031116   9009131803        RE-S-1800x4
  ad0    3831 MB  UGB30SFA4000T1       SFA4000T1 000016CD Compact Flash
  ad1   30533 MB  UGB94BPH32H0S1-KCI   11000061346       Disk 1
  usb0 (addr 1)  EHCI root hub 0       Intel             uhub0
  usb0 (addr 2)  product 0x0020 32     vendor 0x8087     uhub1
  DIMM 0         VL31B5263F-F8SD DIE REV-0 PCB REV-0     MFR ID-ce80
  DIMM 1         VL31B5263F-F8SD DIE REV-0 PCB REV-0     MFR ID-ce80
  DIMM 2         VL31B5263F-F8SD DIE REV-0 PCB REV-0     MFR ID-ce80
  DIMM 3         VL31B5263F-F8SD DIE REV-0 PCB REV-0     MFR ID-ce80
Routing Engine 1 REV 08   740-031116   9009124913        RE-S-1800x4
  ad0    3831 MB  UGB30SFA4000T1       SFA4000T1 0000106D Compact Flash
  ad1   30533 MB  UGB94BPH32H0S1-KCI   11000052402       Disk 1
CB 0             REV 18   750-031391   CABF0579          Enhanced MX SCB
CB 1             REV 16   750-031391   CAAZ2471          Enhanced MX SCB
CB 2             REV 16   750-031391   CAAW9595          Enhanced MX SCB
FPC 0            REV 18   750-046005   CACE6574          MPC5E 3D Q 2CGE+4XGE
  CPU            REV 09   711-045719   CACG8908          RMPC PMB
  PIC 0                   BUILTIN      BUILTIN           2X10GE SFPP OTN
    Xcvr 0       REV 01   740-021308   AQA0DYT           SFP+-10G-SR
    Xcvr 1       REV 01   740-021308   AQG0MS7           SFP+-10G-SR
  PIC 1                   BUILTIN      BUILTIN           1X100GE CFP2 OTN
    Xcvr 0       REV 01   740-046563   XD16FC03Z         CFP2-100G-SR10
  PIC 2                   BUILTIN      BUILTIN           2X10GE SFPP OTN
    Xcvr 0       REV 01   740-021308   ANA0NAJ           SFP+-10G-SR
    Xcvr 1       REV 01   740-021308   AQG0MRQ           SFP+-10G-SR
  PIC 3                   BUILTIN      BUILTIN           1X100GE CFP2 OTN
    Xcvr 0       REV 01   740-049775   J13K72993         CFP2-100G-LR4
FPC 1            REV 11   750-045372   CABK8154          MPCE Type 3 3D
  CPU            REV 08   711-035209   CABE7370          HMPC PMB 2G
  MIC 0          REV 07   750-033307   CABD5255          10X10GE SFPP
    PIC 0                 BUILTIN      BUILTIN           10X10GE SFPP
      Xcvr 0     REV 01   740-021308   AQ50319           SFP+-10G-SR
      Xcvr 1     REV 01   740-021308   AQ5035V           SFP+-10G-SR
      Xcvr 2     REV 01   740-021308   AQ502XJ           SFP+-10G-SR
      Xcvr 3     REV 01   740-021308   AQ43HHR           SFP+-10G-SR
      Xcvr 4     REV 01   740-021308   AQ502YA           SFP+-10G-SR
      Xcvr 5     REV 01   740-021308   AQ502EU           SFP+-10G-SR
      Xcvr 6     REV 01   740-021308   AQ502HR           SFP+-10G-SR
      Xcvr 7     REV 01   740-021308   AQ502A6           SFP+-10G-SR
      Xcvr 8     REV 01   740-021308   AQ43H8M           SFP+-10G-SR
  MIC 1          REV 14   750-033196   CAAP1398          1X100GE CXP
    PIC 2                 BUILTIN      BUILTIN           1X100GE CXP
      Xcvr 0     REV 01   740-046563   XD16FC064         CFP2-100G-SR10
FPC 3            REV 35   750-028467   CAAT9156          MPC 3D 16x 10GE
  CPU            REV 11   711-029089   CAAV4645          AMPC PMB
  PIC 0                   BUILTIN      BUILTIN           4x 10GE(LAN) SFP+
    Xcvr 0       REV 01   740-021308   AQ43HZ1           SFP+-10G-SR
Xcvr 1       REV 01   740-021308   AQ43HZC           SFP+-10G-SR
    Xcvr 2       REV 01   740-021308   AQ43HD2           SFP+-10G-SR
    Xcvr 3       REV 01   740-021308   AQ502HN           SFP+-10G-SR
  PIC 1                   BUILTIN      BUILTIN           4x 10GE(LAN) SFP+
    Xcvr 0       REV 01   740-021308   AQ43HGF           SFP+-10G-SR
    Xcvr 1       REV 01   740-021308   AQ501RZ           SFP+-10G-SR
    Xcvr 2       REV 01   740-021308   AQ5029V           SFP+-10G-SR
    Xcvr 3       REV 01   740-021308   AQ501X9           SFP+-10G-SR
  PIC 2                   BUILTIN      BUILTIN           4x 10GE(LAN) SFP+
    Xcvr 0       REV 01   740-021308   AQ502ZN           SFP+-10G-SR
```

```
    Xcvr 1       REV 01   740-021308   AQ43H86          SFP+-10G-SR
    Xcvr 2       REV 01   740-021308   AQ502ZY          SFP+-10G-SR
    Xcvr 3       REV 01   740-021308   AQ502PZ          SFP+-10G-SR
  PIC 3                   BUILTIN      BUILTIN          4x 10GE(LAN) SFP+
    Xcvr 0       REV 01   740-021308   AQ503E6          SFP+-10G-SR
    Xcvr 1       REV 01   740-021308   AQ502XN          SFP+-10G-SR
    Xcvr 2       REV 01   740-031980   B11F00213        SFP+-10G-SR
    Xcvr 3       REV 01   740-021308   AQ50336          SFP+-10G-SR
FPC 4            REV 18   750-046005   CACE6568         MPC5E 3D Q 2CGE+4XGE
  CPU            REV 09   711-045719   CACG8900         RMPC PMB
  PIC 0                   BUILTIN      BUILTIN          2X10GE SFPP OTN
    Xcvr 0       REV 01   740-021308   AQA095A          SFP+-10G-SR
    Xcvr 1       REV 01   740-021308   AQG0M1E          SFP+-10G-SR
  PIC 1                   BUILTIN      BUILTIN          1X100GE CFP2 OTN
    Xcvr 0                NON-JNPR     FE13F000F        CFP2-100G-SR10
  PIC 2                   BUILTIN      BUILTIN          2X10GE SFPP OTN
    Xcvr 0       REV 01   740-021308   AQG0LYC          SFP+-10G-SR
    Xcvr 1       REV 01   740-021308   AQG0LYB          SFP+-10G-SR
  PIC 3                   BUILTIN      BUILTIN          1X100GE CFP2 OTN
    Xcvr 0       REV 01   740-048813   XD32FE00Z        CFP2-100G-SR10
FPC 5            REV 18   750-046005   CACE6577         MPC5E 3D Q 2CGE+4XGE
  CPU            REV 09   711-045719   CACG8902         RMPC PMB
  PIC 0                   BUILTIN      BUILTIN          2X10GE SFPP OTN
    Xcvr 0       REV 01   740-021308   AQG0MXE          SFP+-10G-SR
    Xcvr 1       REV 01   740-021308   AQG0LVY          SFP+-10G-SR
  PIC 1                   BUILTIN      BUILTIN          1X100GE CFP2 OTN
    Xcvr 0       REV 01   740-046563   XD16FC03T        CFP2-100G-SR10
  PIC 2                   BUILTIN      BUILTIN          2X10GE SFPP OTN
    Xcvr 0       REV 01   740-021308   AQG0LW1          SFP+-10G-SR
    Xcvr 1       REV 01   740-021308   AQG0LW3          SFP+-10G-SR
  PIC 3                   BUILTIN      BUILTIN          1X100GE CFP2 OTN
    Xcvr 0                NON-JNPR     FE13F000J        CFP2-100G-SR10
FPC 7            REV 09   750-037355   CAAF0937         MPC4E 3D 2CGE+8XGE
  CPU            REV 08   711-035209   CAAD8004         HMPC PMB 2G
  PIC 0                   BUILTIN      BUILTIN          4x10GE SFPP
    Xcvr 0       REV 01   740-021308   ANA0MM3          SFP+-10G-SR
  PIC 1                   BUILTIN      BUILTIN          1X100GE CFP
    Xcvr 0       REV 01   740-035329   X000C163         CFP-100G-SR10
  PIC 2                   BUILTIN      BUILTIN          4x10GE SFPP
    Xcvr 0       REV 01   740-021308   AQG0MS6          SFP+-10G-SR
    Xcvr 1       REV 01   740-021308   AQG0MRX          SFP+-10G-SR
    Xcvr 2       REV 01   740-021308   AQG0M6Y          SFP+-10G-SR
    Xcvr 3       REV 01   740-021308   AQG0LZM          SFP+-10G-SR
  PIC 3                   BUILTIN      BUILTIN          1X100GE CFP
    Xcvr 0       REV 01   740-035329   X12J00499        CFP-100G-SR10
FPC 8            REV 39   750-045715   CACD1903         MPC5E 3D Q 24XGE+6XLGE
  CPU            REV 09   711-045719   CACD1815         RMPC PMB
  PIC 0                   BUILTIN      BUILTIN          12X10GE SFPP OTN
 PIC 1                   BUILTIN      BUILTIN          12X10GE SFPP OTN
  PIC 2                   BUILTIN      BUILTIN          3X40GE QSFPP
    Xcvr 0       REV 01   740-046565   QC480289         QSFP+-40G-SR4
    Xcvr 1       REV 01   740-046565   QC480274         QSFP+-40G-SR4
    Xcvr 2       REV 01   740-046565   QD130190         QSFP+-40G-SR4
  PIC 3                   BUILTIN      BUILTIN          3X40GE QSFPP
    Xcvr 0       REV 01   740-046565   QD130197         QSFP+-40G-SR4
    Xcvr 1       REV 01   740-046565   QD130180         QSFP+-40G-SR4
    Xcvr 2       REV 01   740-046565   QD130199         QSFP+-40G-SR4
  WAN MEZZ       REV 09   750-049136   CABN0415         MPC5E 24XGE OTN Mezz
FPC 9            REV 05   750-044444   CAAY9801         MPCE Type 2 3D P
  CPU            REV 04   711-038484   CAAW3673         MPCE PMB 2G
  MIC 0          REV 28   750-028387   CAAX1071         3D 4x 10GE  XFP
```

```
    PIC 0                 BUILTIN      BUILTIN           2x 10GE  XFP
      Xcvr 0              NON-JNPR     T12L92342         XFP-10G-SR
      Xcvr 1              NON-JNPR     T12L92303         XFP-10G-SR
    PIC 1                 BUILTIN      BUILTIN           2x 10GE  XFP
      Xcvr 0              NON-JNPR     CC07BK02X         XFP-10G-SR
  QXM 0          REV 06   711-028408   CAAW4883          MPC QXM
  QXM 1          REV 06   711-028408   CAAW4603          MPC QXM
FPC 10           REV 21.0.11 750-045715 CAAY3541         MPC5E 3D Q 24XGE+6XLGE
  CPU            REV 07   711-045719   CAAW7426          RMPC PMB
  PIC 0                   BUILTIN      BUILTIN           12X10GE SFPP
    Xcvr 0       REV 01   740-031980   AHK01AP           SFP+-10G-SR
    Xcvr 1       REV 01   740-021308   AQ502ZU           SFP+-10G-SR
    Xcvr 2       REV 01   740-031980   AP41BLS           SFP+-10G-SR
    Xcvr 3       REV 01   740-021308   AQA08YA           SFP+-10G-SR
    Xcvr 4       REV 01   740-021308   AQA0K26           SFP+-10G-SR
    Xcvr 6       REV 01   740-021308   AQA06S3           SFP+-10G-SR
    Xcvr 7       REV 01   740-021308   AQA06AS           SFP+-10G-SR
    Xcvr 8       REV 01   740-021308   AQA053N           SFP+-10G-SR
    Xcvr 9       REV 01   740-021308   AQA0E97           SFP+-10G-SR
    Xcvr 10      REV 01   740-021308   AQA0GS4           SFP+-10G-SR
    Xcvr 11      REV 01   740-021308   AQA0JVA           SFP+-10G-SR
  PIC 1                   BUILTIN      BUILTIN           12X10GE SFPP
    Xcvr 0       REV 01   740-021308   AQA057A           SFP+-10G-SR
    Xcvr 1       REV 01   740-021308   ANA0MLS           SFP+-10G-SR
    Xcvr 2       REV 01   740-021308   AQA093A           SFP+-10G-SR
    Xcvr 3       REV 01   740-021309   943153A00075      SFP+-10G-LR
    Xcvr 4       REV 01   740-021308   AQA077B           SFP+-10G-SR
    Xcvr 5       REV 01   740-021308   AQA0JSC           SFP+-10G-SR
    Xcvr 6       REV 01   740-021308   AQA0735           SFP+-10G-SR
    Xcvr 7       REV 01   740-021308   AQ5028N           SFP+-10G-SR
    Xcvr 8       REV 01   740-031980   AP40VN5           SFP+-10G-SR
    Xcvr 9       REV 01   740-021308   AQA0K0J           SFP+-10G-SR
    Xcvr 10      REV 01   740-021308   AQA07AP           SFP+-10G-SR
    Xcvr 11      REV 01   740-021308   AQA08YB           SFP+-10G-SR
  PIC 2                   BUILTIN      BUILTIN           3X40GE QSFPP
  PIC 3                   BUILTIN      BUILTIN           3X40GE QSFPP
  WAN MEZZ       REV 07   750-045717   CAAX3123          MPC5E 24XGE Mezz
FPC 11           REV 17   750-037355   CAAT3986          MPC4E 3D 2CGE+8XGE
  CPU            REV 08   711-035209   CAAR3972          HMPC PMB 2G
  PIC 0                   BUILTIN      BUILTIN           4x10GE SFPP
    Xcvr 0       REV 01   740-021308   AQA0DSE           SFP+-10G-SR
    Xcvr 1       REV 01   740-021308   AQ501Y3           SFP+-10G-SR
    Xcvr 2       REV 01   740-021308   AQ501XU           SFP+-10G-SR
 Xcvr 3       REV 01   740-021308   AQ5036Y           SFP+-10G-SR
  PIC 1                   BUILTIN      BUILTIN           1X100GE CFP
    Xcvr 0                NON-JNPR     X12J00247         CFP-100G-SR10
  PIC 2                   BUILTIN      BUILTIN           4x10GE SFPP
    Xcvr 0       REV 01   740-031980   ALQ1DKF           SFP+-10G-SR
    Xcvr 1       REV 01   740-031980   AJ403YA           SFP+-10G-SR
    Xcvr 2       REV 01   740-031980   AP40TY0           SFP+-10G-SR
    Xcvr 3       REV 01   740-031980   ALQ14G0           SFP+-10G-SR
  PIC 3                   BUILTIN      BUILTIN           1X100GE CFP
    Xcvr 0       REV 01   740-035329   X12J00095         CFP-100G-SR10
Fan Tray 0       REV 08   740-031521   ACAF4219          Enhanced Fan Tray
Fan Tray 1       REV 08   740-031521   ACAF4225          Enhanced Fan Tray
```

show chassis hardware extensive (MX960 Router with MPC5EQ)

```
user@host> show chassis hardware extensive
Hardware inventory:
Item             Version  Part number  Serial number     Description
```

```
Chassis                                 JN1214852AFA      MX960
 Jedec Code:   0x7fb0            EEPROM Version:    0x02
                                 S/N:               JN1214852AFA
 Assembly ID:  0x0512            Assembly Version:  00.00
 Date:         00-00-0000        Assembly Flags:    0x00
 ID: MX960
 Board Information Record:
  Address 0x00: 00 00 00 00 00 00 00 00 00 00 00 00 00 00 00 00
 I2C Hex Data:
  Address 0x00: 7f b0 02 ff 05 12 00 00 00 00 00 00 00 00 00 00
  Address 0x10: 00 00 00 00 00 00 00 00 00 00 00 00 00 00 00 00
  Address 0x20: 4a 4e 31 32 31 34 38 35 32 41 46 41 00 00 00 00
  Address 0x30: 00 00 00 ff 00 00 00 00 00 00 00 00 00 00 00 00
  Address 0x40: 00 00 00 00 00 00 00 00 00 00 00 00 00 00 00 00
  Address 0x50: 00 00 00 00 00 00 00 00 00 00 00 00 00 00 00 00
  Address 0x60: 00 00 00 00 00 00 00 00 00 00 00 00 00 00 00 00
  Address 0x70: 00 00 00 00 00 00 00 00 00 00 00 00 00 00 00 00
Midplane         REV 01   710-030012   ACAX3674          MX960 Backplane
 Jedec Code:   0x7fb0            EEPROM Version:    0x02
 P/N:          710-030012        S/N:               ACAX3674
 Assembly ID:  0x01df            Assembly Version:  01.01
 Date:         01-19-2013        Assembly Flags:    0x00
 Version:      REV 01            CLEI Code:         COM8T00CRB
 ID: MX960 Backplane             FRU Model Number:  CHAS-BP-MX960-S
 Board Information Record:
  Address 0x00: ad 01 08 00 54 e0 32 bc 68 00 ff ff ff ff ff ff
 I2C Hex Data:
  Address 0x00: 7f b0 02 ff 01 df 01 01 52 45 56 20 30 31 00 00
  Address 0x10: 00 00 00 00 37 31 30 2d 30 33 30 30 31 32 00 00
  Address 0x20: 53 2f 4e 20 41 43 41 58 33 36 37 34 00 13 01 07
  Address 0x30: dd ff ff ff ad 01 08 00 54 e0 32 bc 68 00 ff ff
  Address 0x40: ff ff ff ff 01 43 4f 4d 38 54 30 30 43 52 42 43
  Address 0x50: 48 41 53 2d 42 50 2d 4d 58 39 36 30 2d 53 00 00
  Address 0x60: 00 00 00 00 00 00 42 00 00 ff ff ff ff ff ff ff
  Address 0x70: ff ff ff aa ff ff ff ff ff ff ff ff ff ff ff ff
FPM Board        REV 03   710-014974   CAAZ9326          Front Panel Display
 Jedec Code:   0x7fb0            EEPROM Version:    0x01
 P/N:          710-014974        S/N:               CAAZ9326
 Assembly ID:  0x01e6            Assembly Version:  01.03
 Date:         12-31-2012        Assembly Flags:    0x00
 Version:      REV 03
 ID: Front Panel Display         FRU Model Number:  CRAFT-MX960-S
 Board Information Record:
  Address 0x00: ff ff ff ff ff ff ff ff ff ff ff ff ff ff ff ff
 I2C Hex Data:
  Address 0x00: 7f b0 01 ff 01 e6 01 03 52 45 56 20 30 33 00 00
  Address 0x10: 00 00 00 00 37 31 30 2d 30 31 34 39 37 34 00 00
  Address 0x20: 53 2f 4e 20 43 41 41 5a 39 33 32 36 00 1f 0c 07
  Address 0x30: dc ff ff ff ff ff ff ff ff ff ff ff ff ff ff ff
  Address 0x40: ff ff ff ff 01 00 00 00 00 00 00 00 00 00 00 43
  Address 0x50: 52 41 46 54 2d 4d 58 39 36 30 2d 53 00 00 00 00
  Address 0x60: 00 00 00 00 00 00 ff ff ff ff ff ff ff ff ff ff
  Address 0x70: ff ff ff ff ff ff ff ff ff ff ff ff ff ff ff ff
PDM             Rev 03   740-013110   QCS17025017       Power Distribution Module
Jedec Code:   0x7fb0            EEPROM Version:    0x01
 P/N:          740-013110        S/N:               QCS17025017
 Assembly ID:  0x0416            Assembly Version:  01.03
 Date:         01-10-2013        Assembly Flags:    0x00
 Version:      Rev 03
 ID: Power Distribution Module
 Board Information Record:
```

```
  Address 0x00: ff ff ff ff ff ff ff ff ff ff ff ff ff 00 00 00
 I2C Hex Data:
  Address 0x00: 7f b0 01 ff 04 16 01 03 52 65 76 20 30 33 00 00
  Address 0x10: 00 00 00 00 37 34 30 2d 30 31 33 31 31 30 00 00
  Address 0x20: 51 43 53 31 37 30 32 35 30 31 37 00 00 0a 01 07
  Address 0x30: dd ff ff ff ff ff ff ff ff ff ff ff ff ff ff ff
  Address 0x40: ff 00 00 00 00 00 00 00 00 00 00 00 00 00 00 00
  Address 0x50: 00 00 00 00 00 00 00 00 00 00 00 00 00 00 00 00
  Address 0x60: 00 00 00 00 00 00 00 00 00 00 00 00 00 00 00 00
  Address 0x70: 00 00 00 00 00 00 00 00 00 00 00 00 00 00 00 00
PEM 0            Rev 10   740-027760   QCS1702N062       PS 4.1kW; 200-240V AC
in
 Jedec Code:   0x7fb0            EEPROM Version:    0x01
 P/N:          740-027760        S/N:               QCS1702N062
 Assembly ID:  0x0430            Assembly Version:  01.10
 Date:         01-15-2013        Assembly Flags:    0x00
 Version:      Rev 10
 ID: PS 4.1kW; 200-240V AC in    FRU Model Number:  PWR-MX960-4100-AC-S
 Board Information Record:
  Address 0x00: ff ff ff ff ff ff ff ff ff ff ff ff 00 00 00 00
 I2C Hex Data:
  Address 0x00: 7f b0 01 ff 04 30 01 0a 52 65 76 20 31 30 00 00
  Address 0x10: 00 00 00 00 37 34 30 2d 30 32 37 37 36 30 00 00
  Address 0x20: 51 43 53 31 37 30 32 4e 30 36 32 00 00 0f 01 07
  Address 0x30: dd ff ff ff ff ff ff ff ff ff ff ff ff ff ff ff
  Address 0x40: 00 00 00 00 01 00 00 00 00 00 00 00 00 00 00 50
  Address 0x50: 57 52 2d 4d 58 39 36 30 2d 34 31 30 30 2d 41 43
  Address 0x60: 2d 53 00 00 00 00 00 00 00 00 00 00 00 00 00 00
  Address 0x70: 00 00 00 00 00 00 00 00 00 00 00 00 00 00 00 00
PEM 1            Rev 04   740-027760   QCS1422N02C       PS 4.1kW; 200-240V AC
in
 Jedec Code:   0x7fb0            EEPROM Version:    0x01
 P/N:          740-027760        S/N:               QCS1422N02C
 Assembly ID:  0x0430            Assembly Version:  01.04
 Date:         06-04-2010        Assembly Flags:    0x00
 Version:      Rev 04
 ID: PS 4.1kW; 200-240V AC in    FRU Model Number:  PWR-MX960-4100-AC-S
 Board Information Record:
  Address 0x00: ff ff ff ff ff ff ff ff ff ff ff ff 00 00 00 00
 I2C Hex Data:
  Address 0x00: 7f b0 01 ff 04 30 01 04 52 65 76 20 30 34 00 00
  Address 0x10: 00 00 00 00 37 34 30 2d 30 32 37 37 36 30 00 00
  Address 0x20: 51 43 53 31 34 32 32 4e 30 32 43 00 00 04 06 07
  Address 0x30: da ff ff ff ff ff ff ff ff ff ff ff ff ff ff ff
  Address 0x40: 00 00 00 00 01 00 00 00 00 00 00 00 00 00 00 50
  Address 0x50: 57 52 2d 4d 58 39 36 30 2d 34 31 30 30 2d 41 43
  Address 0x60: 2d 53 00 00 00 00 00 00 00 00 00 00 00 00 00 00
  Address 0x70: 00 00 00 00 00 00 00 00 00 00 00 00 00 00 00 00
PEM 2            Rev 09   740-027760   QCS1614N01X       PS 4.1kW; 200-240V AC
in
 Jedec Code:   0x7fb0            EEPROM Version:    0x01
 P/N:          740-027760        S/N:               QCS1614N01X
Assembly ID:  0x0430            Assembly Version:  01.09
 Date:         04-07-2012        Assembly Flags:    0x00
 Version:      Rev 09
 ID: PS 4.1kW; 200-240V AC in    FRU Model Number:  PWR-MX960-4100-AC-S
 Board Information Record:
  Address 0x00: ff ff ff ff ff ff ff ff ff ff ff ff 00 00 00 00
 I2C Hex Data:
  Address 0x00: 7f b0 01 ff 04 30 01 09 52 65 76 20 30 39 00 00
  Address 0x10: 00 00 00 00 37 34 30 2d 30 32 37 37 36 30 00 00
```

```
  Address 0x20: 51 43 53 31 36 31 34 4e 30 31 58 00 00 07 04 07
  Address 0x30: dc ff ff ff ff ff ff ff ff ff ff ff ff ff ff ff
  Address 0x40: 00 00 00 00 01 00 00 00 00 00 00 00 00 00 00 50
  Address 0x50: 57 52 2d 4d 58 39 36 30 2d 34 31 30 30 2d 41 43
  Address 0x60: 2d 53 00 00 00 00 00 00 00 00 00 00 00 00 00 00
  Address 0x70: 00 00 00 00 00 00 00 00 00 00 00 00 00 00 00 00
Routing Engine 0 REV 08   740-031116   9009131803        RE-S-1800x4
 Jedec Code:   0x7fb0            EEPROM Version:    0x02
 P/N:          740-031116        S/N:               9009131803
 Assembly ID:  0x09c0            Assembly Version:  01.08
 Date:         03-04-2013        Assembly Flags:    0x00
 Version:      REV 08            CLEI Code:         COUCASKBAA
 ID: RE-S-1800x4                 FRU Model Number:  RE-S-1800X4-16G-S
 Board Information Record:
  Address 0x00: 54 32 30 32 37 44 42 2d 34 34 47 42 23 42 23 00
 I2C Hex Data:
  Address 0x00: 7f b0 02 ff 09 c0 01 08 52 45 56 20 30 38 00 00
  Address 0x10: 00 00 00 00 37 34 30 2d 30 33 31 31 31 36 00 00
  Address 0x20: 39 30 30 39 31 33 31 38 30 33 00 00 00 04 03 07
  Address 0x30: dd ff ff ff 54 32 30 32 37 44 42 2d 34 34 47 42
  Address 0x40: 23 42 23 00 01 43 4f 55 43 41 53 4b 42 41 41 52
  Address 0x50: 45 2d 53 2d 31 38 30 30 58 34 2d 31 36 47 2d 53
  Address 0x60: 00 00 00 00 00 00 41 30 30 ff ff ff ff ff ff ff
  Address 0x70: ff ff ff 59 ff ff ff ff ff ff ff ff ff ff ff ff
  ad0    3831 MB  UGB30SFA4000T1       SFA4000T1 000016CD Compact Flash
  ad1   30533 MB  UGB94BPH32H0S1-KCI   11000061346       Disk 1
  usb0 (addr 1)  EHCI root hub 0       Intel             uhub0
  usb0 (addr 2)  product 0x0020 32     vendor 0x8087     uhub1
  DIMM 0         VL31B5263F-F8SD DIE REV-0 PCB REV-0     MFR ID-ce80
  DIMM 1         VL31B5263F-F8SD DIE REV-0 PCB REV-0     MFR ID-ce80
  DIMM 2         VL31B5263F-F8SD DIE REV-0 PCB REV-0     MFR ID-ce80
  DIMM 3         VL31B5263F-F8SD DIE REV-0 PCB REV-0     MFR ID-ce80
Routing Engine 1 REV 08   740-031116   9009124913        RE-S-1800x4
 Jedec Code:   0x7fb0            EEPROM Version:    0x02
 P/N:          740-031116        S/N:               9009124913
 Assembly ID:  0x09c0            Assembly Version:  01.08
 Date:         01-09-2013        Assembly Flags:    0x00
 Version:      REV 08            CLEI Code:         COUCASKBAA
 ID: RE-S-1800x4                 FRU Model Number:  RE-S-1800X4-16G-S
 Board Information Record:
  Address 0x00: 54 32 30 32 37 44 42 2d 34 34 47 42 23 42 23 00
 I2C Hex Data:
  Address 0x00: 7f b0 02 ff 09 c0 01 08 52 45 56 20 30 38 00 00
  Address 0x10: 00 00 00 00 37 34 30 2d 30 33 31 31 31 36 00 00
  Address 0x20: 39 30 30 39 31 32 34 39 31 33 00 00 00 09 01 07
  Address 0x30: dd ff ff ff 54 32 30 32 37 44 42 2d 34 34 47 42
  Address 0x40: 23 42 23 00 01 43 4f 55 43 41 53 4b 42 41 41 52
 Address 0x50: 45 2d 53 2d 31 38 30 30 58 34 2d 31 36 47 2d 53
  Address 0x60: 00 00 00 00 00 00 41 30 30 ff ff ff ff ff ff ff
  Address 0x70: ff ff ff 59 ff ff ff ff ff ff ff ff ff ff ff ff
  ad0    3831 MB  UGB30SFA4000T1       SFA4000T1 0000106D Compact Flash
  ad1   30533 MB  UGB94BPH32H0S1-KCI   11000052402       Disk 1
CB 0             REV 18   750-031391   CABF0579          Enhanced MX SCB
 Jedec Code:   0x7fb0            EEPROM Version:    0x02
 P/N:          750-031391        S/N:               CABF0579
 Assembly ID:  0x09b0            Assembly Version:  01.18
 Date:         04-15-2013        Assembly Flags:    0x00
 Version:      REV 18            CLEI Code:         COUCASRBAA
 ID: Enhanced MX SCB             FRU Model Number:  SCBE-MX-S
 Board Information Record:
  Address 0x00: ff ff ff ff ff ff ff ff ff ff ff ff ff ff ff ff
```

```
  I2C Hex Data:
   Address 0x00: 7f b0 02 ff 09 b0 01 12 52 45 56 20 31 38 00 00
   Address 0x10: 00 00 00 00 37 35 30 2d 30 33 31 33 39 31 00 00
   Address 0x20: 53 2f 4e 20 43 41 42 46 30 35 37 39 00 0f 04 07
   Address 0x30: dd ff ff ff ff ff ff ff ff ff ff ff ff ff ff ff
   Address 0x40: ff ff ff ff 01 43 4f 55 43 41 53 52 42 41 41 53
   Address 0x50: 43 42 45 2d 4d 58 2d 53 00 00 00 00 00 00 00 00
   Address 0x60: 00 00 00 00 00 00 43 00 00 ff ff ff ff ff ff ff
   Address 0x70: ff ff ff 7d ff ff ff ff ff ff ff ff ff ff ff ff
CB 1             REV 16   750-031391   CAAZ2471          Enhanced MX SCB
  Jedec Code:   0x7fb0            EEPROM Version:    0x02
  P/N:          750-031391        S/N:               CAAZ2471
  Assembly ID:  0x09b0            Assembly Version:  01.16
  Date:         03-09-2013        Assembly Flags:    0x00
  Version:      REV 16            CLEI Code:         COUCARCBAB
  ID: Enhanced MX SCB             FRU Model Number:  SCBE-MX-S
  Board Information Record:
   Address 0x00: ff ff ff ff ff ff ff ff ff ff ff ff ff ff ff ff
  I2C Hex Data:
   Address 0x00: 7f b0 02 ff 09 b0 01 10 52 45 56 20 31 36 00 00
   Address 0x10: 00 00 00 00 37 35 30 2d 30 33 31 33 39 31 00 00
   Address 0x20: 53 2f 4e 20 43 41 41 5a 32 34 37 31 00 09 03 07
   Address 0x30: dd ff ff ff ff ff ff ff ff ff ff ff ff ff ff ff
   Address 0x40: ff ff ff ff 01 43 4f 55 43 41 52 43 42 41 42 53
   Address 0x50: 43 42 45 2d 4d 58 2d 53 00 00 00 00 00 00 00 00
   Address 0x60: 00 00 00 00 00 00 42 00 00 ff ff ff ff ff ff ff
   Address 0x70: ff ff ff 6d ff ff ff ff ff ff ff ff ff ff ff ff
CB 2             REV 16   750-031391   CAAW9595          Enhanced MX SCB
  Jedec Code:   0x7fb0            EEPROM Version:    0x02
  P/N:          750-031391        S/N:               CAAW9595
  Assembly ID:  0x09b0            Assembly Version:  01.16
  Date:         02-01-2013        Assembly Flags:    0x00
  Version:      REV 16            CLEI Code:         COUCARCBAB
  ID: Enhanced MX SCB             FRU Model Number:  SCBE-MX-S
  Board Information Record:
   Address 0x00: ff ff ff ff ff ff ff ff ff ff ff ff ff ff ff ff
  I2C Hex Data:
   Address 0x00: 7f b0 02 ff 09 b0 01 10 52 45 56 20 31 36 00 00
   Address 0x10: 00 00 00 00 37 35 30 2d 30 33 31 33 39 31 00 00
   Address 0x20: 53 2f 4e 20 43 41 41 57 39 35 39 35 00 01 02 07
   Address 0x30: dd ff ff ff ff ff ff ff ff ff ff ff ff ff ff ff
   Address 0x40: ff ff ff ff 01 43 4f 55 43 41 52 43 42 41 42 53
  Address 0x50: 43 42 45 2d 4d 58 2d 53 00 00 00 00 00 00 00 00
   Address 0x60: 00 00 00 00 00 00 42 00 00 ff ff ff ff ff ff ff
   Address 0x70: ff ff ff 6d ff ff ff ff ff ff ff ff ff ff ff ff
FPC 0            REV 18   750-046005   CACE6574          MPC5E 3D Q 2CGE+4XGE
  Jedec Code:   0x7fb0            EEPROM Version:    0x02
  P/N:          750-046005        S/N:               CACE6574
  Assembly ID:  0x0b8c            Assembly Version:  01.18
  Date:         11-20-2013        Assembly Flags:    0x00
  Version:      REV 18            CLEI Code:         PROTOXCLEI
  ID: MPC5E 3D Q 2CGE+4XGE        FRU Model Number:  PROTO-ASSEMBLY
  Board Information Record:
   Address 0x00: ff ff ff ff ff ff ff ff ff ff ff ff ff ff ff ff
  I2C Hex Data:
   Address 0x00: 7f b0 02 ff 0b 8c 01 12 52 45 56 20 31 38 00 00
   Address 0x10: 00 00 00 00 37 35 30 2d 30 34 36 30 30 35 00 00
   Address 0x20: 53 2f 4e 20 43 41 43 45 36 35 37 34 00 14 0b 07
   Address 0x30: dd ff ff ff ff ff ff ff ff ff ff ff ff ff ff ff
   Address 0x40: ff ff ff ff 01 50 52 4f 54 4f 58 43 4c 45 49 50
   Address 0x50: 52 4f 54 4f 2d 41 53 53 45 4d 42 4c 59 00 00 00
```

```
 Address 0x60: 00 00 00 00 00 00 41 30 30 ff ff ff ff ff ff ff
 Address 0x70: ff ff ff c2 ff ff ff ff ff ff ff ff ff ff ff ff
 CPU            REV 09   711-045719   CACG8908          RMPC PMB
Jedec Code:   0x7fb0            EEPROM Version:    0x02
P/N:          711-045719        S/N:               CACG8908
Assembly ID:  0x0b85            Assembly Version:  01.09
Date:         11-13-2013        Assembly Flags:    0x00
Version:      REV 09
ID: RMPC PMB
Board Information Record:
 Address 0x00: ff ff ff ff ff ff ff ff ff ff ff ff ff ff ff ff
I2C Hex Data:
 Address 0x00: 7f b0 02 ff 0b 85 01 09 52 45 56 20 30 39 00 00
 Address 0x10: 00 00 00 00 37 31 31 2d 30 34 35 37 31 39 00 00
 Address 0x20: 53 2f 4e 20 43 41 43 47 38 39 30 38 00 0d 0b 07
 Address 0x30: dd ff ff ff ff ff ff ff ff ff ff ff ff ff ff ff
 Address 0x40: ff ff ff ff 00 50 52 4f 54 4f 58 43 4c 45 49 50
 Address 0x50: 52 4f 54 4f 2d 41 53 53 45 4d 42 4c 59 00 00 00
 Address 0x60: 00 00 00 00 00 00 41 30 30 ff ff ff ff ff ff ff
 Address 0x70: ff ff ff c2 00 00 00 00 00 00 00 00 00 00 00 00
 PIC 0                  BUILTIN      BUILTIN           2X10GE SFPP OTN
Jedec Code:   0x0000            EEPROM Version:    0x00
P/N:          BUILTIN           S/N:               BUILTIN
Assembly ID:  0x0a90            Assembly Version:  00.00
Date:         00-00-0000        Assembly Flags:    0x00
ID: 2X10GE SFPP OTN
Board Information Record:
 Address 0x00: 00 00 00 00 00 00 00 00 00 00 00 00 00 00 00 00
I2C Hex Data:
 Address 0x00: 00 00 00 00 0a 90 00 00 00 00 00 00 00 00 00 00
 Address 0x10: 00 00 00 00 42 55 49 4c 54 49 4e 00 25 73 3a 20
 Address 0x20: 42 55 49 4c 54 49 4e 00 25 73 3a 20 00 00 00 00
 Address 0x30: 00 00 00 00 00 00 00 00 00 00 00 00 00 00 00 00
 Address 0x40: 00 00 00 00 00 00 00 00 00 00 00 00 00 00 00 00
 Address 0x50: 00 00 00 00 00 00 00 00 00 00 00 00 00 00 00 00
 Address 0x60: 00 00 00 00 00 00 00 00 00 00 00 00 00 00 00 00
 Address 0x70: 00 00 00 00 c0 02 ae dc 00 00 00 00 0a 6e 00 00
Xcvr 0       REV 01   740-021308   AQA0DYT           SFP+-10G-SR
   Xcvr 1       REV 01   740-021308   AQG0MS7           SFP+-10G-SR
 PIC 1                  BUILTIN      BUILTIN           1X100GE CFP2 OTN
Jedec Code:   0x0000            EEPROM Version:    0x00
P/N:          BUILTIN           S/N:               BUILTIN
Assembly ID:  0x0a6e            Assembly Version:  00.00
Date:         00-00-0000        Assembly Flags:    0x00
ID: 1X100GE CFP2 OTN
Board Information Record:
 Address 0x00: 00 00 00 00 00 00 00 00 00 00 00 00 00 00 00 00
I2C Hex Data:
 Address 0x00: 00 00 00 00 0a 6e 00 00 00 00 00 00 00 00 00 00
 Address 0x10: 00 00 00 00 42 55 49 4c 54 49 4e 00 25 73 3a 20
 Address 0x20: 42 55 49 4c 54 49 4e 00 25 73 3a 20 00 00 00 00
 Address 0x30: 00 00 00 00 00 00 00 00 00 00 00 00 00 00 00 00
 Address 0x40: 00 00 00 00 00 00 00 00 00 00 00 00 00 00 00 00
 Address 0x50: 00 00 00 00 00 00 00 00 00 00 00 00 00 00 00 00
 Address 0x60: 00 00 00 00 00 00 00 00 00 00 00 00 00 00 00 00
 Address 0x70: 00 00 00 00 c0 03 f3 8c 31 5c e7 80 00 00 00 02
   Xcvr 0       REV 01   740-046563   XD16FC03Z         CFP2-100G-SR10
 PIC 2                  BUILTIN      BUILTIN           2X10GE SFPP OTN
Jedec Code:   0x0000            EEPROM Version:    0x00
P/N:          BUILTIN           S/N:               BUILTIN
Assembly ID:  0x0a90            Assembly Version:  00.00
```

```
 Date:         00-00-0000        Assembly Flags:    0x00
 ID: 2X10GE SFPP OTN
 Board Information Record:
  Address 0x00: 00 00 00 00 00 00 00 00 00 00 00 00 00 00 00 00
 I2C Hex Data:
  Address 0x00: 00 00 00 00 0a 90 00 00 00 00 00 00 00 00 00 00
  Address 0x10: 00 00 00 00 42 55 49 4c 54 49 4e 00 25 73 3a 20
  Address 0x20: 42 55 49 4c 54 49 4e 00 25 73 3a 20 00 00 00 00
  Address 0x30: 00 00 00 00 00 00 00 00 00 00 00 00 00 00 00 00
  Address 0x40: 00 00 00 00 00 00 00 00 00 00 00 00 00 00 00 00
  Address 0x50: 00 00 00 00 00 00 00 00 00 00 00 00 00 00 00 00
  Address 0x60: 00 00 00 00 00 00 00 00 00 00 00 00 00 00 00 00
  Address 0x70: 00 00 00 00 c0 03 f5 6c 31 5c db 40 00 00 00 02
    Xcvr 0       REV 01   740-021308   ANA0NAJ           SFP+-10G-SR
    Xcvr 1       REV 01   740-021308   AQG0MRQ           SFP+-10G-SR
  PIC 3                   BUILTIN      BUILTIN           1X100GE CFP2 OTN
 Jedec Code:   0x0000            EEPROM Version:    0x00
 P/N:          BUILTIN           S/N:               BUILTIN
 Assembly ID:  0x0a6e            Assembly Version:  00.00
 Date:         00-00-0000        Assembly Flags:    0x00
 ID: 1X100GE CFP2 OTN
 Board Information Record:
  Address 0x00: 00 00 00 00 00 00 00 00 00 00 00 00 00 00 00 00
 I2C Hex Data:
  Address 0x00: 00 00 00 00 0a 6e 00 00 00 00 00 00 00 00 00 00
  Address 0x10: 00 00 00 00 42 55 49 4c 54 49 4e 00 25 73 3a 20
  Address 0x20: 42 55 49 4c 54 49 4e 00 25 73 3a 20 00 00 00 00
  Address 0x30: 00 00 00 00 00 00 00 00 00 00 00 00 00 00 00 00
  Address 0x40: 00 00 00 00 00 00 00 00 00 00 00 00 00 00 00 00
  Address 0x50: 00 00 00 00 00 00 00 00 00 00 00 00 00 00 00 00
  Address 0x60: 00 00 00 00 00 00 00 00 00 00 00 00 00 00 00 00
  Address 0x70: 00 00 00 00 c0 03 ed ec 31 5c e2 e8 00 00 00 02
 Xcvr 0       REV 01   740-049775   J13K72993         CFP2-100G-LR4
FPC 1            REV 11   750-045372   CABK8154          MPCE Type 3 3D
 Jedec Code:   0x7fb0            EEPROM Version:    0x02
 P/N:          750-045372        S/N:               CABK8154
 Assembly ID:  0x09db            Assembly Version:  04.11
 Date:         05-18-2013        Assembly Flags:    0x00
 Version:      REV 11            CLEI Code:         COUIBBNBAA
 ID: MPCE Type 3 3D              FRU Model Number:  MX-MPC3E-3D
 Board Information Record:
  Address 0x00: ff ff ff ff ff ff ff ff ff ff ff ff ff ff ff ff
 I2C Hex Data:
  Address 0x00: 7f b0 02 ff 09 db 04 0b 52 45 56 20 31 31 00 00
  Address 0x10: 00 00 00 00 37 35 30 2d 30 34 35 33 37 32 00 00
  Address 0x20: 53 2f 4e 20 43 41 42 4b 38 31 35 34 00 12 05 07
  Address 0x30: dd ff ff ff ff ff ff ff ff ff ff ff ff ff ff ff
  Address 0x40: ff ff ff ff 01 43 4f 55 49 42 42 4e 42 41 41 4d
  Address 0x50: 58 2d 4d 50 43 33 45 2d 33 44 00 00 00 00 00 00
  Address 0x60: 00 00 00 00 00 00 44 00 00 ff ff ff ff ff ff ff
  Address 0x70: ff ff ff cf ff ff ff ff ff ff ff ff ff ff ff ff
  CPU            REV 08   711-035209   CABE7370          HMPC PMB 2G
 Jedec Code:   0x7fb0            EEPROM Version:    0x01
 P/N:          711-035209        S/N:               CABE7370
 Assembly ID:  0x0b04            Assembly Version:  01.08
 Date:         05-08-2013        Assembly Flags:    0x00
 Version:      REV 08
 ID: HMPC PMB 2G
 Board Information Record:
  Address 0x00: ff ff ff ff ff ff ff ff ff ff ff ff ff ff ff ff
 I2C Hex Data:
```

```
  Address 0x00: 7f b0 01 ff 0b 04 01 08 52 45 56 20 30 38 00 00
  Address 0x10: 00 00 00 00 37 31 31 2d 30 33 35 32 30 39 00 00
  Address 0x20: 53 2f 4e 20 43 41 42 45 37 33 37 30 00 08 05 07
  Address 0x30: dd ff ff ff ff ff ff ff ff ff ff ff ff ff ff ff
  Address 0x40: ff ff ff ff 00 ff ff ff ff ff ff ff ff ff ff ff
  Address 0x50: ff ff ff ff ff ff ff ff ff ff ff ff ff ff ff ff
  Address 0x60: ff ff ff ff ff ff ff ff ff ff ff ff ff ff ff ff
  Address 0x70: ff ff ff ff 00 00 00 00 00 00 00 00 00 00 00 00
  MIC 0          REV 07   750-033307   CABD5255          10X10GE SFPP
 Jedec Code:   0x7fb0            EEPROM Version:    0x02
 P/N:          750-033307        S/N:               CABD5255
 Assembly ID:  0x0a2a            Assembly Version:  02.07
 Date:         04-25-2013        Assembly Flags:    0x00
 Version:      REV 07            CLEI Code:         COUIBBJBAA
 ID: 10X10GE SFPP                FRU Model Number:  MIC3-3D-10XGE-SFPP
 Board Information Record:
  Address 0x00: 34 01 03 03 05 ff ff ff ff ff ff ff ff ff ff ff
 I2C Hex Data:
  Address 0x00: 7f b0 02 fe 0a 2a 02 07 52 45 56 20 30 37 00 00
  Address 0x10: 00 00 00 00 37 35 30 2d 30 33 33 33 30 37 00 00
  Address 0x20: 53 2f 4e 20 43 41 42 44 35 32 35 35 00 19 04 07
  Address 0x30: dd ff ff ff 34 01 03 03 05 ff ff ff ff ff ff ff
  Address 0x40: ff ff ff ff 01 43 4f 55 49 42 42 4a 42 41 41 4d
  Address 0x50: 49 43 33 2d 33 44 2d 31 30 58 47 45 2d 53 46 50
  Address 0x60: 50 00 00 00 00 00 41 00 00 ff ff ff ff ff ff ff
  Address 0x70: ff ff ff 82 c0 03 f0 bc 57 79 83 80 00 00 00 02
    PIC 0                 BUILTIN      BUILTIN           10X10GE SFPP
Xcvr 0     REV 01   740-021308   AQ50319           SFP+-10G-SR
      Xcvr 1     REV 01   740-021308   AQ5035V           SFP+-10G-SR
      Xcvr 2     REV 01   740-021308   AQ502XJ           SFP+-10G-SR
      Xcvr 3     REV 01   740-021308   AQ43HHR           SFP+-10G-SR
      Xcvr 4     REV 01   740-021308   AQ502YA           SFP+-10G-SR
      Xcvr 5     REV 01   740-021308   AQ502EU           SFP+-10G-SR
      Xcvr 6     REV 01   740-021308   AQ502HR           SFP+-10G-SR
      Xcvr 7     REV 01   740-021308   AQ502A6           SFP+-10G-SR
      Xcvr 8     REV 01   740-021308   AQ43H8M           SFP+-10G-SR
  MIC 1          REV 14   750-033196   CAAP1398          1X100GE CXP
 Jedec Code:   0x7fb0            EEPROM Version:    0x02
 P/N:          750-033196        S/N:               CAAP1398
 Assembly ID:  0x0a29            Assembly Version:  03.14
 Date:         10-27-2012        Assembly Flags:    0x00
 Version:      REV 14            CLEI Code:         COUIBBKBAA
 ID: 1X100GE CXP                 FRU Model Number:  MIC3-3D-1X100GE-CXP
 Board Information Record:
  Address 0x00: 34 01 07 07 08 ff ff ff ff ff ff ff ff ff ff ff
 I2C Hex Data:
  Address 0x00: 7f b0 02 fe 0a 29 03 0e 52 45 56 20 31 34 00 00
  Address 0x10: 00 00 00 00 37 35 30 2d 30 33 33 31 39 36 00 00
  Address 0x20: 53 2f 4e 20 43 41 41 50 31 33 39 38 00 1b 0a 07
  Address 0x30: dc ff ff ff 34 01 07 07 08 ff ff ff ff ff ff ff
  Address 0x40: ff ff ff ff 01 43 4f 55 49 42 42 4b 42 41 41 4d
  Address 0x50: 49 43 33 2d 33 44 2d 31 58 31 30 30 47 45 2d 43
  Address 0x60: 58 50 00 00 00 00 41 00 00 ff ff ff ff ff ff ff
  Address 0x70: ff ff ff 96 c0 03 ef cc 57 79 85 08 00 00 00 02
    PIC 2                 BUILTIN      BUILTIN           1X100GE CXP
      Xcvr 0     REV 01   740-046563   XD16FC064         CFP2-100G-SR10
FPC 3            REV 35   750-028467   CAAT9156          MPC 3D 16x 10GE
 Jedec Code:   0x7fb0            EEPROM Version:    0x01
 P/N:          750-028467        S/N:               CAAT9156
 Assembly ID:  0x0997            Assembly Version:  01.35
 Date:         12-17-2012        Assembly Flags:    0x00
```

```
Version:      REV 35
ID: MPC 3D 16x 10GE             FRU Model Number:  MPC-3D-16XGE-SFPP
Board Information Record:
 Address 0x00: ff ff ff ff ff ff ff ff ff ff ff ff ff ff ff ff
I2C Hex Data:
 Address 0x00: 7f b0 01 ff 09 97 01 23 52 45 56 20 33 35 00 00
 Address 0x10: 00 00 00 00 37 35 30 2d 30 32 38 34 36 37 00 00
 Address 0x20: 53 2f 4e 20 43 41 41 54 39 31 35 36 00 11 0c 07
 Address 0x30: dc ff ff ff ff ff ff ff ff ff ff ff ff ff ff ff
 Address 0x40: ff ff ff ff 01 00 00 00 00 00 00 00 00 00 00 4d
 Address 0x50: 50 43 2d 33 44 2d 31 36 58 47 45 2d 53 46 50 50
 Address 0x60: 00 00 00 00 00 00 ff ff ff ff ff ff ff ff ff ff
 Address 0x70: ff ff ff ff ff ff ff ff ff ff ff ff ff ff ff ff
 CPU            REV 11   711-029089   CAAV4645          AMPC PMB
Jedec Code:   0x7fb0            EEPROM Version:    0x01
P/N:          711-029089        S/N:               CAAV4645
Assembly ID:  0x0998            Assembly Version:  01.11
Date:         12-13-2012        Assembly Flags:    0x00
Version:      REV 11
ID: AMPC PMB
Board Information Record:
 Address 0x00: ff ff ff ff ff ff ff ff ff ff ff ff ff ff ff ff
I2C Hex Data:
 Address 0x00: 7f b0 01 ff 09 98 01 0b 52 45 56 20 31 31 00 00
 Address 0x10: 00 00 00 00 37 31 31 2d 30 32 39 30 38 39 00 00
 Address 0x20: 53 2f 4e 20 43 41 41 56 34 36 34 35 00 0d 0c 07
 Address 0x30: dc ff ff ff ff ff ff ff ff ff ff ff ff ff ff ff
 Address 0x40: ff ff ff ff 00 ff ff ff ff ff ff ff ff ff ff ff
 Address 0x50: ff ff ff ff ff ff ff ff ff ff ff ff ff ff ff ff
 Address 0x60: ff ff ff ff ff ff ff ff ff ff ff ff ff ff ff ff
 Address 0x70: ff ff ff ff 00 00 00 00 00 00 00 00 00 00 00 00
 PIC 0                  BUILTIN      BUILTIN           4x 10GE(LAN) SFP+
Jedec Code:   0x0000            EEPROM Version:    0x00
P/N:          BUILTIN           S/N:               BUILTIN
Assembly ID:  0x02fe            Assembly Version:  00.00
Date:         00-00-0000        Assembly Flags:    0x00
ID: 4x 10GE(LAN) SFP+
Board Information Record:
 Address 0x00: 00 00 00 00 00 00 00 00 00 00 00 00 00 00 00 00
I2C Hex Data:
 Address 0x00: 00 00 00 00 02 fe 00 00 00 00 00 00 00 00 00 00
 Address 0x10: 00 00 00 00 42 55 49 4c 54 49 4e 00 25 73 3a 20
 Address 0x20: 42 55 49 4c 54 49 4e 00 25 73 3a 20 00 00 00 00
 Address 0x30: 00 00 00 00 00 00 00 00 00 00 00 00 00 00 00 00
 Address 0x40: 00 00 00 00 00 00 00 00 00 00 00 00 00 00 00 00
 Address 0x50: 00 00 00 00 00 00 00 00 00 00 00 00 00 00 00 00
 Address 0x60: 00 00 00 00 00 00 00 00 00 00 00 00 00 00 00 00
 Address 0x70: 00 00 00 00 c0 02 6b 94 00 00 00 00 02 fe 00 00
   Xcvr 0       REV 01   740-021308   AQ43HZ1           SFP+-10G-SR
   Xcvr 1       REV 01   740-021308   AQ43HZC           SFP+-10G-SR
   Xcvr 2       REV 01   740-021308   AQ43HD2           SFP+-10G-SR
   Xcvr 3       REV 01   740-021308   AQ502HN           SFP+-10G-SR
 PIC 1                  BUILTIN      BUILTIN           4x 10GE(LAN) SFP+
Jedec Code:   0x0000            EEPROM Version:    0x00
P/N:          BUILTIN           S/N:               BUILTIN
Assembly ID:  0x02fe            Assembly Version:  00.00
Date:         00-00-0000        Assembly Flags:    0x00
ID: 4x 10GE(LAN) SFP+
Board Information Record:
 Address 0x00: 00 00 00 00 00 00 00 00 00 00 00 00 00 00 00 00
I2C Hex Data:
```



```
  Address 0x00: 00 00 00 00 02 fe 00 00 00 00 00 00 00 00 00 00
  Address 0x10: 00 00 00 00 42 55 49 4c 54 49 4e 00 25 73 3a 20
  Address 0x20: 42 55 49 4c 54 49 4e 00 25 73 3a 20 00 00 00 00
  Address 0x30: 00 00 00 00 00 00 00 00 00 00 00 00 00 00 00 00
  Address 0x40: 00 00 00 00 00 00 00 00 00 00 00 00 00 00 00 00
  Address 0x50: 00 00 00 00 00 00 00 00 00 00 00 00 00 00 00 00
  Address 0x60: 00 00 00 00 00 00 00 00 00 00 00 00 00 00 00 00
  Address 0x70: 00 00 00 00 c0 02 ac 0c 00 00 00 00 02 fe 00 00
    Xcvr 0       REV 01   740-021308   AQ43HGF           SFP+-10G-SR
    Xcvr 1       REV 01   740-021308   AQ501RZ           SFP+-10G-SR
    Xcvr 2       REV 01   740-021308   AQ5029V           SFP+-10G-SR
    Xcvr 3       REV 01   740-021308   AQ501X9           SFP+-10G-SR
  PIC 2                   BUILTIN      BUILTIN           4x 10GE(LAN) SFP+
 Jedec Code:   0x0000            EEPROM Version:    0x00
 P/N:          BUILTIN           S/N:               BUILTIN
 Assembly ID:  0x02fe            Assembly Version:  00.00
 Date:         00-00-0000        Assembly Flags:    0x00
......
```

show chassis hardware models (MX960 Router with MPC5EQ)

```
user@host> show chassis hardware models
Hardware inventory:
Item             Version  Part number  Serial number     FRU model number
Midplane         REV 01   710-030012   ACAX3674          CHAS-BP-MX960-S
FPM Board        REV 03   710-014974   CAAZ9326          CRAFT-MX960-S
PEM 0            Rev 10   740-027760   QCS1702N062       PWR-MX960-4100-AC-S
PEM 1            Rev 04   740-027760   QCS1422N02C       PWR-MX960-4100-AC-S
PEM 2            Rev 09   740-027760   QCS1614N01X       PWR-MX960-4100-AC-S
Routing Engine 0 REV 08   740-031116   9009131803        RE-S-1800X4-16G-S
Routing Engine 1 REV 08   740-031116   9009124913        RE-S-1800X4-16G-S
CB 0             REV 18   750-031391   CABF0579          SCBE-MX-S
CB 1             REV 16   750-031391   CAAZ2471          SCBE-MX-S
CB 2             REV 16   750-031391   CAAW9595          SCBE-MX-S
FPC 0            REV 18   750-046005   CACE6574          PROTO-ASSEMBLY
FPC 1            REV 11   750-045372   CABK8154          MX-MPC3E-3D
  MIC 0          REV 07   750-033307   CABD5255          MIC3-3D-10XGE-SFPP
  MIC 1          REV 14   750-033196   CAAP1398          MIC3-3D-1X100GE-CXP
FPC 3            REV 35   750-028467   CAAT9156          MPC-3D-16XGE-SFPP
FPC 4            REV 18   750-046005   CACE6568          PROTO-ASSEMBLY
FPC 5            REV 18   750-046005   CACE6577          PROTO-ASSEMBLY
FPC 7            REV 09   750-037355   CAAF0937          MPC4E-2CGE-8XGE
FPC 8            REV 39   750-045715   CACD1903          PROTO-ASSEMBLY
FPC 9            REV 05   750-044444   CAAY9801          MX-MPC2E-3D-P
  MIC 0          REV 28   750-028387   CAAX1071          MIC-3D-4XGE-XFP
FPC 10           REV 21.0.11 750-045715 CAAY3541         PROTO-ASSEMBLY
FPC 11           REV 17   750-037355   CAAT3986          MPC4E-3D-2CGE-8XGE
Fan Tray 0       REV 08   740-031521   ACAF4219          FFANTRAY-MX960-HC-S
Fan Tray 1       REV 08   740-031521   ACAF4225          FFANTRAY-MX960-HC-S
```

show chassis hardware clei-models (MX960 Router with MPC5EQ)

```
user@host> show chassis hardware clei-models
Hardware inventory:
Item             Version  Part number  CLEI code         FRU model number
Midplane         REV 01   710-030012   COM8T00CRB        CHAS-BP-MX960-S
FPM Board        REV 03   710-014974                     CRAFT-MX960-S
PEM 0            Rev 10   740-027760                     PWR-MX960-4100-AC-S
PEM 1            Rev 04   740-027760                     PWR-MX960-4100-AC-S
PEM 2            Rev 09   740-027760                     PWR-MX960-4100-AC-S
```

```
Routing Engine 0 REV 08   740-031116   COUCASKBAA        RE-S-1800X4-16G-S
Routing Engine 1 REV 08   740-031116   COUCASKBAA        RE-S-1800X4-16G-S
CB 0             REV 18   750-031391   COUCASRBAA        SCBE-MX-S
CB 1             REV 16   750-031391   COUCARCBAB        SCBE-MX-S
CB 2             REV 16   750-031391   COUCARCBAB        SCBE-MX-S
FPC 0            REV 18   750-046005   PROTOXCLEI        PROTO-ASSEMBLY
FPC 1            REV 11   750-045372   COUIBBNBAA        MX-MPC3E-3D
  MIC 0          REV 07   750-033307   COUIBBJBAA        MIC3-3D-10XGE-SFPP
  MIC 1          REV 14   750-033196   COUIBBKBAA        MIC3-3D-1X100GE-CXP
FPC 3            REV 35   750-028467                     MPC-3D-16XGE-SFPP
FPC 4            REV 18   750-046005   PROTOXCLEI        PROTO-ASSEMBLY
FPC 5            REV 18   750-046005   PROTOXCLEI        PROTO-ASSEMBLY
FPC 7            REV 09   750-037355   PROTOXCLEI        MPC4E-2CGE-8XGE
FPC 8            REV 39   750-045715   PROTOXCLEI        PROTO-ASSEMBLY
FPC 9            REV 05   750-044444   COUIBBGBAA        MX-MPC2E-3D-P
  MIC 0          REV 28   750-028387   COUIA16BAA        MIC-3D-4XGE-XFP
FPC 10           REV 21.0.11 750-045715 PROTOXCLEI       PROTO-ASSEMBLY
FPC 11           REV 17   750-037355   IPU3A4DHAA        MPC4E-3D-2CGE-8XGE
Fan Tray 0       REV 08   740-031521                     FFANTRAY-MX960-HC-S
Fan Tray 1       REV 08   740-031521                     FFANTRAY-MX960-HC-S
```

show chassis hardware (MX960 Router with MPC3E and 100-Gigabit DWDM OTN MIC)

```
user@host> show chassis hardware
Hardware inventory:
Item             Version  Part number  Serial number     Description
Chassis                                JN123F6D9AFA      MX960
Midplane         REV 04   750-047849   ACRC8764          Enhanced MX960 Backplane
FPM Board        REV 03   710-014974   CACS4395          Front Panel Display
PDM             Rev 03   740-013110   QCS1809500Z       Power Distribution Module
PEM 0            Rev 08   740-029344   QCS1817V0LK       DC 4.1kW Power Entry
Module
PEM 1            Rev 08   740-029344   QCS1814V01F       DC 4.1kW Power Entry
Module
PEM 2            Rev 08   740-029344   QCS1810V1EW       DC 4.1kW Power Entry
Module
PEM 3            Rev 08   740-029344   QCS1810V1K5       DC 4.1kW Power Entry
Module
Routing Engine 0 REV 11   740-031116   9013103483        RE-S-1800x4
Routing Engine 1 REV 10   740-031116   9009198513        RE-S-1800x4
CB 0             REV 23   750-031391   CADW3218          Enhanced MX SCB
CB 1             REV 14   750-031391   ABBK5220          Enhanced MX SCB
FPC 1            REV 14   750-045372   CADK0464          MPCE Type 3 3D
  CPU            REV 10   711-035209   CADM9839          HMPC PMB 2G
  MIC 0          REV 19   750-033199   CAAE5870          1X100GE CFP
    PIC 0                 BUILTIN      BUILTIN           1X100GE CFP
      Xcvr 0     REV 01   740-032210   UTH0H0W           CFP-100G-LR4
FPC 2            REV 14   750-045372   CADN3262          MPCE Type 3 3D
  CPU            REV 10   711-035209   CADN8129          HMPC PMB 2G
FPC 3            REV 14   750-045372   CADH0146          MPCE Type 3 3D
  CPU            REV 10   711-035209   CADT2458          HMPC PMB 2G
  MIC 0          REV 03   750-057666   CADP1386          1X100GE DWDM CFP2-ACO
    PIC 0                 BUILTIN      BUILTIN           1X100GE DWDM CFP2-ACO
      Xcvr 0     REV 01   740-062357   SMD5136.1         OTN-100G-LH
FPC 4            REV 18   750-045372   CAEV5668          MPCE Type 3 3D
  CPU            REV 10   711-035209   CAET7827          HMPC PMB 2G
FPC 7            REV 14   750-045372   CADJ1947          MPCE Type 3 3D
  CPU            REV 10   711-035209   CADJ1561          HMPC PMB 2G
  MIC 0          REV 05   750-057666   CAEB5763          1X100GE DWDM CFP2-ACO
    PIC 0                 BUILTIN      BUILTIN           1X100GE DWDM CFP2-ACO
      Xcvr 0     REV 01   740-062357   1DJBZ052002       OTN-100G-LH
```

```
FPC 8            REV 14   750-045372   CADK0485          MPCE Type 3 3D
  CPU            REV 10   711-035209   CADM9828          HMPC PMB 2G
  MIC 0          REV 03   750-057666   CADP1390          1X100GE DWDM CFP2-ACO
    PIC 0                 BUILTIN      BUILTIN           1X100GE DWDM CFP2-ACO
FPC 9            REV 14   750-045372   CADJ1936          MPCE Type 3 3D
  CPU            REV 10   711-035209   CADJ1566          HMPC PMB 2G
  MIC 0          REV 14   750-057666   CAFF7544          1X100GE DWDM CFP2-ACO
    PIC 0                 BUILTIN      BUILTIN           1X100GE DWDM CFP2-ACO
      Xcvr 0     REV 01   740-062357   1DJBZ05100K       OTN-100G-LH
FPC 10           REV 14   750-054901   CADJ3846          MPC3E NG HQoS
  CPU            REV 11   711-045719   CADN5471          RMPC PMB
  MIC 0          REV 05   750-057666   CAEB5760          1X100GE DWDM CFP2-ACO
 PIC 0                 BUILTIN      BUILTIN           1X100GE DWDM CFP2-ACO
      Xcvr 0     REV 01   740-062357   SMD5091.1         CFP-Loopback
Fan Tray 0       REV 08   740-031521   ACDB4083          Enhanced Fan Tray
Fan Tray 1       REV 08   740-031521   ACDB3995          Enhanced Fan Tray
```

show chassis hardware clei-models(MX960 Router with MPC3E and 100-Gigabit DWDM OTN MIC)

```
user@host> show chassis hardware clei-models
Hardware inventory:
Item             Version  Part number  CLEI code         FRU model number
Midplane         REV 04   750-047849   CMMJA10BRA        CHAS-BP3-MX960-S
FPM Board        REV 03   710-014974                     CRAFT-MX960-S
PEM 0            Rev 08   740-029344                     PWR-MX960-4100-DC-S
PEM 1            Rev 08   740-029344                     PWR-MX960-4100-DC-S
PEM 2            Rev 08   740-029344                     PWR-MX960-4100-DC-S
PEM 3            Rev 08   740-029344                     PWR-MX960-4100-DC-S
Routing Engine 0 REV 11   740-031116   COUCASYBAB        RE-S-1800X4-16G-S
Routing Engine 1 REV 10   740-031116   COUCASYBAA        RE-S-1800X4-16G-S
CB 0             REV 23   750-031391   COUCATXBAA        SCBE-MX-S
CB 1             REV 14   750-031391   COUCARCBAA        SCBE-MX-S
FPC 1            REV 14   750-045372   COUIBBNBAB        MX-MPC3E-3D
  MIC 0          REV 19   750-033199   COUIBA8BAA        MIC3-3D-1X100GE-CFP
FPC 2            REV 14   750-045372   COUIBBNBAB        MX-MPC3E-3D
FPC 3            REV 14   750-045372   COUIBBNBAB        MX-MPC3E-3D
  MIC 0          REV 03   750-057666   PROTOXCLEI        PROTO-ASSEMBLY
FPC 4            REV 18   750-045372   COUIBBNBAC        MX-MPC3E-3D
FPC 7            REV 14   750-045372   COUIBBNBAB        MX-MPC3E-3D
  MIC 0          REV 05   750-057666   PROTOXCLEI        PROTO-ASSEMBLY
FPC 8            REV 14   750-045372   COUIBBNBAB        MX-MPC3E-3D
  MIC 0          REV 03   750-057666   PROTOXCLEI        PROTO-ASSEMBLY
FPC 9            REV 14   750-045372   COUIBBNBAB        MX-MPC3E-3D
  MIC 0          REV 14   750-057666   PROTOXCLEI        PROTO-ASSEMBLY
FPC 10           REV 14   750-054901   PROTOXCLEI        PROTO-ASSEMBLY
  MIC 0          REV 05   750-057666   PROTOXCLEI        PROTO-ASSEMBLY
Fan Tray 0       REV 08   740-031521                     FFANTRAY-MX960-HC-S
Fan Tray 1       REV 08   740-031521                     FFANTRAY-MX960-HC-S
```

show chassis hardware (MX10008 Router)

```
user@host> show chassis hardware
Hardware inventory:
Item             Version  Part number  Serial number     Description
Chassis                                DE487             JNP10008 [MX10008]
Midplane         REV 27   750-054097   ACPD4307          Midplane 8
Routing Engine 0          BUILTIN      BUILTIN           RE X10 LT
Routing Engine 1          BUILTIN      BUILTIN           RE X10
CB 0             REV 02   750-079563   CAFF4580          Control Board
CB 1             REV 04   750-079563   CAGL8034          Control Board
```

```
..
...
..
4
FPC 3            REV 04   750-084779   CAKR7019          JNP10K-LC2101
  CPU            REV 05   750-073391   CAKJ2854          LC 2101 PMB
  PIC 0                   BUILTIN      BUILTIN           4xQSFP28 SYNCE
    Xcvr 0       REV 01   740-058734   1ACQ104300K       QSFP-100GBASE-SR4
  PIC 1                   BUILTIN      BUILTIN           4xQSFP28 SYNCE
    Xcvr 0       REV 01   740-061405   1ACQ12110AN       QSFP-100GBASE-SR4
  PIC 2                   BUILTIN      BUILTIN           4xQSFP28 SYNCE
    Xcvr 0       REV 01   740-046565   QG1105B2          QSFP+-40G-SR4
  PIC 3                   BUILTIN      BUILTIN           4xQSFP28 SYNCE
    Xcvr 0       REV 01   740-045627   QH08036X          40GBASE eSR4
  PIC 4                   BUILTIN      BUILTIN           4xQSFP28 SYNCE
    Xcvr 0       REV 01   740-067443   XWR0RY7           QSFP+-40G-SR4
    Xcvr 1       REV 01   740-067443   XWR0RYH           QSFP+-40G-SR4
    Xcvr 2       REV 01   740-067443   XWR0RYP           QSFP+-40G-SR4
    Xcvr 3       REV 01   740-067443   XWS028S           QSFP+-40G-SR4
  PIC 5                   BUILTIN      BUILTIN           4xQSFP28 SYNCE
    Xcvr 3       REV 01   740-058734   1ACQ113406C       QSFP-100GBASE-SR4
FPD Board        REV 07   711-054687   ACPC7142          Front Panel Display
PEM 0            REV 02   740-049388   1EDL62102N9       Power Supply AC
PEM 1            REV 02   740-049388   1EDL60300KX       Power Supply AC
PEM 2            REV 02   740-049388   1EDL60300DL       Power Supply AC
PEM 3            REV 02   740-049388   1EDL61701BT       Power Supply AC
PEM 4            REV 02   740-049388   1EDL62102P7       Power Supply AC
PEM 5            REV 02   740-049388   1EDL62102PP       Power Supply AC
FTC 0            REV 14   750-050108   ACPE4038          Fan Controller 8
FTC 1            REV 14   750-050108   ACPE4032          Fan Controller 8
Fan Tray 0       REV 09   760-054372   ACPD6799          Fan Tray 8
Fan Tray 1       REV 09   760-054372   ACNZ3584          Fan Tray 8
SFB 0            REV 24   750-050058   ACPD4587          Switch Fabric (SIB) 8

SFB 1            REV 24   750-050058   ACNZ0635          Switch Fabric (SIB) 8
SFB 2            REV 24   750-050058   ACPD4908          Switch Fabric (SIB) 8
SFB 3            REV 24   750-050058   ACNZ0617          Switch Fabric (SIB) 8
SFB 4            REV 24   750-050058   ACNZ0527          Switch Fabric (SIB) 8
SFB 5            REV 23   750-050058   ACNX6980          Switch Fabric (SIB) 8
```

show chassis hardware clei-models (MX10008 Router)

```
user@host> show chassis hardware clei-models
Hardware inventory:
Item             Version  Part number  CLEI code         FRU model number
Midplane         REV 27   750-054097   CMMUM00ARA        QFX10008-CHAS
CB 0             REV 02   750-079563
CB 1             REV 04   750-079563
FPC 0            REV 12   750-073174   PROTOXCLEI        PROTO-ASSEMBLY
FPC 2            REV 03   750-073174   PROTOXCLEI        PROTO-ASSEMBLY
FPC 3            REV 04   750-084779   PROTOXCLEI        PROTO-ASSEMBLY
FPD Board        REV 07   711-054687
PEM 0            REV 02   740-049388   CMUPADNBAA        QFX10000-PWR-AC
PEM 1            REV 02   740-049388   CMUPADNBAA        QFX10000-PWR-AC
PEM 2            REV 02   740-049388   CMUPADNBAA        QFX10000-PWR-AC
PEM 3            REV 02   740-049388   CMUPADNBAA        QFX10000-PWR-AC
PEM 4            REV 02   740-049388   CMUPADNBAA        QFX10000-PWR-AC
PEM 5            REV 02   740-049388   CMUPADNBAA        QFX10000-PWR-AC
FTC 0            REV 14   750-050108   CMUCAHZCAA        QFX10008-FAN-CTRL
FTC 1            REV 14   750-050108   CMUCAHZCAA        QFX10008-FAN-CTRL
Fan Tray 0       REV 09   760-054372   CMUCAHYCAA        QFX10008-FAN
```

```
Fan Tray 1       REV 09   760-054372   CMUCAHYCAA        QFX10008-FAN
SFB 0            REV 24   750-050058   CMUCAHOCAA        QFX10008-SF
SFB 1            REV 24   750-050058   CMUCAHOCAA        QFX10008-SF
SFB 2            REV 24   750-050058   CMUCAHOCAA        QFX10008-SF
SFB 3            REV 24   750-050058   CMUCAHOCAA        QFX10008-SF
SFB 4            REV 24   750-050058   CMUCAHOCAA        QFX10008-SF
SFB 5            REV 23   750-050058   CMUCAHOCAA        QFX10008-SF
```

show chassis hardware detail (MX10008 Router)

```
user@host> show chassis hardware detail
Hardware inventory:
Item             Version  Part number  Serial number     Description
Chassis                                DE487             JNP10008 [MX10008]
Midplane         REV 27   750-054097   ACPD4307          Midplane 8
Routing Engine 0          BUILTIN      BUILTIN           RE X10 LT
  vtbd0 17408 MB                                         Virtio Block Disk
  vtbd1 57344 MB                                         Virtio Block Disk
  vtbd2 12288 MB                                         Virtio Block Disk
  ada0    128 MB  QEMU                 QM00002           Virtio Block Disk
  usb0 (addr 0.1) XHCI root HUB 0      0x8086            uhub0
Routing Engine 1          BUILTIN      BUILTIN           RE X10
  vtbd0 17408 MB                                         Virtio Block Disk
  vtbd1 57344 MB                                         Virtio Block Disk
  vtbd2 12288 MB                                         Virtio Block Disk
  ada0    128 MB  QEMU                 QM00002           Virtio Block Disk
  usb0 (addr 0.1) XHCI root HUB 0      0x8086            uhub0
CB 0             REV 02   750-079563   CAFF4580          Control Board
CB 1             REV 04   750-079563   CAGL8034          Control Board
FPC 0            REV 12   750-073174   CAJK0253          JNP10K-LC2102
  CPU            REV 04   750-073391   CAKJ0761          LC 2101 PMB
  PIC 0                   BUILTIN      BUILTIN           4xQSFP28 MACSEC
    Xcvr 0       REV 01   740-054053   QF4807XH          QSFP+-4X10G-SR
    Xcvr 1       REV 01   740-046565   QF121734          QSFP+-40G-SR4
    Xcvr 3       REV 01   740-067443   XWS027R           QSFP+-40G-SR4
  PIC 1                   BUILTIN      BUILTIN           4xQSFP28 MACSEC
    Xcvr 0       REV 01   740-045627   QH080366          40GBASE eSR4
    Xcvr 1       REV 01   740-054053   XYJ0A4P           QSFP+-4X10G-SR
  PIC 2                   BUILTIN      BUILTIN           4xQSFP28 MACSEC
    Xcvr 0       REV 01   740-058734   1ACQ113404E       QSFP-100GBASE-SR4
  PIC 3                   BUILTIN      BUILTIN           4xQSFP28 MACSEC
    Xcvr 0       REV 01   740-058734   1ACQ1041018       QSFP-100GBASE-SR4
    Xcvr 1       REV 01   740-067443   XWS08JK           QSFP+-40G-SR4
    Xcvr 2       REV 01   740-032986   QF340C63          QSFP+-40G-SR4
    Xcvr 3       REV 01   740-067443   XWS08JL           QSFP+-40G-SR4
  PIC 4                   BUILTIN      BUILTIN           4xQSFP28 MACSEC
    Xcvr 0                NON-JNPR     37700171YY0083    QSFP-100GBASE-LR4
  PIC 5                   BUILTIN      BUILTIN           4xQSFP28 MACSEC
    Xcvr 0       REV 01   740-032986   QE201294          QSFP+-40G-SR4
    Xcvr 1       REV 01   740-046565   QH0603VK          QSFP+-40G-SR4
    Xcvr 2       REV 01   740-046565   QD510321          QSFP+-40G-SR4
    Xcvr 3       REV 01   740-054053   QF3208KP          QSFP+-4X10G-SR
FPC 2            REV 03   750-073174   CAJB6004          JNP10K-LC2102
  CPU            REV 01   750-073391   CAHM7956          LC 2101 PMB
  PIC 0                   BUILTIN      BUILTIN           4xQSFP28 MACSEC
    Xcvr 0       REV 01   740-061405   1ACQ12110JK       QSFP-100GBASE-SR4
  PIC 1                   BUILTIN      BUILTIN           4xQSFP28 MACSEC
    Xcvr 0       REV 01   740-046565   XYH0P6F           QSFP+-40G-SR4
  PIC 2                   BUILTIN      BUILTIN           4xQSFP28 MACSEC
    Xcvr 0       REV 01   740-067442   XX401TT           QSFP+-40G-SR4
    Xcvr 1       REV 01   740-067443   XV3002D           QSFP+-40G-SR4
```

```
    Xcvr 2       REV 01   740-067442   XX401SL           QSFP+-40G-SR4
    Xcvr 3       REV 01   740-067443   XV30A78           QSFP+-40G-SR4
  PIC 3                   BUILTIN      BUILTIN           4xQSFP28 MACSEC
    Xcvr 0       REV 01   740-067442   XX401T2           QSFP+-40G-SR4
    Xcvr 1       REV 01   740-067442   XX401SZ           QSFP+-40G-SR4
  PIC 4                   BUILTIN      BUILTIN           4xQSFP28 MACSEC
    Xcvr 0       REV 01   740-061405   1ACQ12110JS       QSFP-100GBASE-SR4
    Xcvr 1       REV 01   740-061405   1ACQ12110JP       QSFP-100GBASE-SR4
    Xcvr 2       REV 01   740-061405   1ACQ12110JQ       QSFP-100GBASE-SR4
    Xcvr 3       REV 01   740-061405   1ACQ121109R       QSFP-100GBASE-SR4
  PIC 5                   BUILTIN      BUILTIN           4xQSFP28 MACSEC
    Xcvr 0       REV 01   740-061405   1ACQ121109P       QSFP-100GBASE-SR4
    Xcvr 1       REV 01   740-061405   1ACQ12110JC       QSFP-100GBASE-SR4
FPC 3            REV 04   750-084779   CAKR7019          JNP10K-LC2101
  CPU            REV 05   750-073391   CAKJ2854          LC 2101 PMB
  PIC 0                   BUILTIN      BUILTIN           4xQSFP28 SYNCE
    Xcvr 0       REV 01   740-058734   1ACQ104300K       QSFP-100GBASE-SR4
  PIC 1                   BUILTIN      BUILTIN           4xQSFP28 SYNCE
    Xcvr 0       REV 01   740-061405   1ACQ12110AN       QSFP-100GBASE-SR4
  PIC 2                   BUILTIN      BUILTIN           4xQSFP28 SYNCE
    Xcvr 0       REV 01   740-046565   QG1105B2          QSFP+-40G-SR4
  PIC 3                   BUILTIN      BUILTIN           4xQSFP28 SYNCE
    Xcvr 0       REV 01   740-045627   QH08036X          40GBASE eSR4
  PIC 4                   BUILTIN      BUILTIN           4xQSFP28 SYNCE
    Xcvr 0       REV 01   740-067443   XWR0RY7           QSFP+-40G-SR4
    Xcvr 1       REV 01   740-067443   XWR0RYH           QSFP+-40G-SR4
    Xcvr 2       REV 01   740-067443   XWR0RYP           QSFP+-40G-SR4
    Xcvr 3       REV 01   740-067443   XWS028S           QSFP+-40G-SR4
  PIC 5                   BUILTIN      BUILTIN           4xQSFP28 SYNCE
    Xcvr 3       REV 01   740-058734   1ACQ113406C       QSFP-100GBASE-SR4
FPD Board        REV 07   711-054687   ACPC7142          Front Panel Display
PEM 0            REV 02   740-049388   1EDL62102N9       Power Supply AC
PEM 1            REV 02   740-049388   1EDL60300KX       Power Supply AC
PEM 2            REV 02   740-049388   1EDL60300DL       Power Supply AC
PEM 3            REV 02   740-049388   1EDL61701BT       Power Supply AC
PEM 4            REV 02   740-049388   1EDL62102P7       Power Supply AC
PEM 5            REV 02   740-049388   1EDL62102PP       Power Supply AC
FTC 0            REV 14   750-050108   ACPE4038          Fan Controller 8
FTC 1            REV 14   750-050108   ACPE4032          Fan Controller 8
Fan Tray 0       REV 09   760-054372   ACPD6799          Fan Tray 8
Fan Tray 1       REV 09   760-054372   ACNZ3584          Fan Tray 8
SFB 0            REV 24   750-050058   ACPD4587          Switch Fabric (SIB) 8
SFB 1            REV 24   750-050058   ACNZ0635          Switch Fabric (SIB) 8
SFB 2            REV 24   750-050058   ACPD4908          Switch Fabric (SIB) 8
SFB 3            REV 24   750-050058   ACNZ0617          Switch Fabric (SIB) 8
SFB 4            REV 24   750-050058   ACNZ0527          Switch Fabric (SIB) 8
SFB 5            REV 23   750-050058   ACNX6980          Switch Fabric (SIB) 8
```

show chassis hardware extensive(MX10008 Router)

```
user@host> show chassis hardware extensive
Hardware inventory:
Item             Version  Part number  Serial number     Description
Chassis                                DE487             JNP10008 [MX10008]
 Jedec Code:   0x7fb0            EEPROM Version:    0x02
                                 S/N:               DE487
 Assembly ID:  0x0566            Assembly Version:  01.27
 Date:         08-08-2016        Assembly Flags:    0x00
                                 CLEI Code:         CMMUM00ARA
 ID: JNP10008                    FRU Model Number:  QFX10008-CHAS
 Board Information Record:
```



```
  Address 0x00: ad 01 08 00 30 b6 4f e9 74 c4 ff ff ff ff ff ff
 I2C Hex Data:
  Address 0x00: 7f b0 02 ff 05 66 01 1b 00 45 56 20 32 37 00 00
  Address 0x10: 00 00 00 00 00 35 30 2d 30 35 34 30 39 37 00 00
  Address 0x20: 44 45 34 38 37 00 00 00 00 00 00 00 00 08 08 07
  Address 0x30: e0 ff ff ff ad 01 08 00 30 b6 4f e9 74 c4 ff ff
  Address 0x40: ff ff ff ff 01 43 4d 4d 55 4d 30 30 41 52 41 51
  Address 0x50: 46 58 31 30 30 30 38 2d 43 48 41 53 00 00 00 00
  Address 0x60: 00 00 00 00 00 00 41 44 00 ff ff ff ff ff ff ff
  Address 0x70: ff ff ff 63 44 45 34 38 37 00 00 00 00 00 00 00
Midplane         REV 27   750-054097   ACPD4307          Midplane 8
 Jedec Code:   0x7fb0            EEPROM Version:    0x02
 P/N:          750-054097        S/N:               ACPD4307
 Assembly ID:  0x0be3            Assembly Version:  01.27
 Date:         08-08-2016        Assembly Flags:    0x00
 Version:      REV 27            CLEI Code:         CMMUM00ARA
 ID: Midplane 8                  FRU Model Number:  QFX10008-CHAS
 Board Information Record:
  Address 0x00: ad 01 08 00 30 b6 4f e9 74 c4 ff ff ff ff ff ff
 I2C Hex Data:
  Address 0x00: 7f b0 02 ff 0b e3 01 1b 52 45 56 20 32 37 00 00
  Address 0x10: 00 00 00 00 37 35 30 2d 30 35 34 30 39 37 00 00
  Address 0x20: 53 2f 4e 20 41 43 50 44 34 33 30 37 00 08 08 07
  Address 0x30: e0 ff ff ff ad 01 08 00 30 b6 4f e9 74 c4 ff ff
  Address 0x40: ff ff ff ff 01 43 4d 4d 55 4d 30 30 41 52 41 51
  Address 0x50: 46 58 31 30 30 30 38 2d 43 48 41 53 00 00 00 00
  Address 0x60: 00 00 00 00 00 00 41 44 00 ff ff ff ff ff ff ff
  Address 0x70: ff ff ff 63 44 45 34 38 37 00 00 00 00 00 00 00
Routing Engine 0          BUILTIN      BUILTIN           RE X10 LT
  vtbd0 17408 MB                                         Virtio Block Disk
  vtbd1 57344 MB                                         Virtio Block Disk
  vtbd2 12288 MB                                         Virtio Block Disk
  ada0    128 MB  QEMU                 QM00002           Virtio Block Disk
  usb0 (addr 0.1) XHCI root HUB 0      0x8086            uhub0
Routing Engine 1          BUILTIN      BUILTIN           RE X10
  vtbd0 17408 MB                                         Virtio Block Disk
  vtbd1 57344 MB                                         Virtio Block Disk
  vtbd2 12288 MB                                         Virtio Block Disk
  ada0    128 MB  QEMU                 QM00002           Virtio Block Disk
  usb0 (addr 0.1) XHCI root HUB 0      0x8086            uhub0
CB 0             REV 02   750-079563   CAFF4580          Control Board
 Jedec Code:   0x7fb0            EEPROM Version:    0x01
 P/N:          750-079563        S/N:               CAFF4580
 Assembly ID:  0x0ca3            Assembly Version:  01.02
 Date:         06-06-2016        Assembly Flags:    0x00
 Version:      REV 02
 ID: Control Board
 Board Information Record:
  Address 0x00: ad 01 00 40 4c 16 fc 91 7c 85 ff ff ff ff ff ff
 I2C Hex Data:
  Address 0x00: 7f b0 01 fe 0c a3 01 02 52 45 56 20 30 32 00 00
  Address 0x10: 00 00 00 00 37 35 30 2d 30 37 39 35 36 33 00 00
  Address 0x20: 53 2f 4e 20 43 41 46 46 34 35 38 30 00 06 06 07
  Address 0x30: e0 fe ff ff ad 01 00 40 4c 16 fc 91 7c 85 ff ff
  Address 0x40: ff ff ff ff ff ff ff ff ff ff ff ff ff ff ff ff
  Address 0x50: ff ff ff ff ff ff ff ff ff ff ff ff ff ff ff ff
  Address 0x60: ff ff ff ff ff ff ff ff ff ff ff ff ff ff ff ff
  Address 0x70: ff ff ff ff ff ff ff ff ff ff ff ff ff ff ff ff
CB 1             REV 04   750-079563   CAGL8034          Control Board
 Jedec Code:   0x7fb0            EEPROM Version:    0x01
 P/N:          750-079563        S/N:               CAGL8034
```

```
  Assembly ID:  0x0ca3            Assembly Version:  01.04
  Date:         06-28-2018        Assembly Flags:    0x00
  Version:      REV 04
  ID: Control Board
  Board Information Record:
   Address 0x00: ad 01 00 40 4c 16 fc 91 7c c5 ff ff ff ff ff ff
  I2C Hex Data:
   Address 0x00: 7f b0 01 fe 0c a3 01 04 52 45 56 20 30 34 00 00
   Address 0x10: 00 00 00 00 37 35 30 2d 30 37 39 35 36 33 00 00
   Address 0x20: 53 2f 4e 20 43 41 47 4c 38 30 33 34 00 1c 06 07
   Address 0x30: e2 fc ff ff ad 01 00 40 4c 16 fc 91 7c c5 ff ff
   Address 0x40: ff ff ff ff ff ff ff ff ff ff ff ff ff ff ff ff
   Address 0x50: ff ff ff ff ff ff ff ff ff ff ff ff ff ff ff ff
   Address 0x60: ff ff ff ff ff ff ff ff ff ff ff ff ff ff ff ff
   Address 0x70: ff ff ff ff ff ff ff ff ff ff ff ff ff ff ff ff
FPC 0            REV 12   750-073174   CAJK0253          JNP10K-LC2102
  Jedec Code:   0x7fb0            EEPROM Version:    0x02
  P/N:          750-073174        S/N:               CAJK0253
  Assembly ID:  0x0ca5            Assembly Version:  01.12
  Date:         09-28-2017        Assembly Flags:    0x00
  Version:      REV 12            CLEI Code:         PROTOXCLEI
  ID: JNP10K-LC2102               FRU Model Number:  PROTO-ASSEMBLY
  Board Information Record:
   Address 0x00: ff ff ff ff ff ff ff ff ff ff ff ff ff ff ff ff
  I2C Hex Data:
   Address 0x00: 7f b0 02 ff 0c a5 01 0c 52 45 56 20 31 32 00 00
   Address 0x10: 00 00 00 00 37 35 30 2d 30 37 33 31 37 34 00 00
   Address 0x20: 53 2f 4e 20 43 41 4a 4b 30 32 35 33 00 1c 09 07
   Address 0x30: e1 ff ff ff ff ff ff ff ff ff ff ff ff ff ff ff
   Address 0x40: ff ff ff ff 01 50 52 4f 54 4f 58 43 4c 45 49 50
   Address 0x50: 52 4f 54 4f 2d 41 53 53 45 4d 42 4c 59 00 00 00
   Address 0x60: 00 00 00 00 00 00 41 30 30 ff ff ff ff ff ff ff
   Address 0x70: ff ff ff c2 ff ff ff ff ff ff ff ff ff ff ff ff
   CPU            REV 04   750-073391   CAKJ0761          LC 2101 PMB
  Jedec Code:   0x7fb0            EEPROM Version:    0x02
  P/N:          750-073391        S/N:               CAKJ0761
  Assembly ID:  0x0cda            Assembly Version:  01.04
  Date:         01-22-2018        Assembly Flags:    0x00
  Version:      REV 04
  ID: LC 2101 PMB
  Board Information Record:
   Address 0x00: ff ff ff ff ff ff ff ff ff ff ff ff ff ff ff ff
  I2C Hex Data:
   Address 0x00: 7f b0 02 ff 0c da 01 04 52 45 56 20 30 34 00 00
   Address 0x10: 00 00 00 00 37 35 30 2d 30 37 33 33 39 31 00 00
   Address 0x20: 53 2f 4e 20 43 41 4b 4a 30 37 36 31 00 16 01 07
   Address 0x30: e2 ff ff ff ff ff ff ff ff ff ff ff ff ff ff ff
   Address 0x40: ff ff ff ff 00 50 52 4f 54 4f 58 43 4c 45 49 50
   Address 0x50: 52 4f 54 4f 2d 41 53 53 45 4d 42 4c 59 00 00 00
   Address 0x60: 00 00 00 00 00 00 41 30 30 ff ff ff ff ff ff ff
   Address 0x70: ff ff ff c2 00 00 00 00 00 00 00 00 00 00 00 00
   PIC 0                   BUILTIN      BUILTIN           4xQSFP28 MACSEC
  Jedec Code:   0x0000            EEPROM Version:    0x00
  P/N:          BUILTIN           S/N:               BUILTIN
  Assembly ID:  0x0af1            Assembly Version:  00.00
  Date:         00-00-0000        Assembly Flags:    0x00
  ID: 4x QSFP28 10/40/100GE MACSec PIC
  Board Information Record:
   Address 0x00: 00 00 00 00 00 00 00 00 00 00 00 00 00 00 00 00
  I2C Hex Data:
   Address 0x00: 00 00 00 00 0a f1 00 00 00 00 00 00 00 00 00 00
```

```
 Address 0x10: 00 00 00 00 42 55 49 4c 54 49 4e 00 25 73 3a 20
 Address 0x20: 42 55 49 4c 54 49 4e 00 25 73 3a 20 00 00 00 00
 Address 0x30: 00 00 00 00 00 00 00 00 00 00 00 00 00 00 00 00
 Address 0x40: 00 00 00 00 00 00 00 00 00 00 00 00 00 00 00 00
 Address 0x50: 00 00 00 00 00 00 00 00 00 00 00 00 00 00 00 00
 Address 0x60: 00 00 00 00 00 00 00 00 00 00 00 00 00 00 00 00
 Address 0x70: 00 00 00 00 83 00 d1 f1 00 00 00 00 0a f1 00 00
   Xcvr 0       REV 01   740-054053   QF4807XH          QSFP+-4X10G-SR
   Xcvr 1       REV 01   740-046565   QF121734          QSFP+-40G-SR4
   Xcvr 3       REV 01   740-067443   XWS027R           QSFP+-40G-SR4
 PIC 1                   BUILTIN      BUILTIN           4xQSFP28 MACSEC
Jedec Code:   0x0000            EEPROM Version:    0x00
P/N:          BUILTIN           S/N:               BUILTIN
Assembly ID:  0x0af1            Assembly Version:  00.00
Date:         00-00-0000        Assembly Flags:    0x00
ID: 4x QSFP28 10/40/100GE MACSec PIC
Board Information Record:
 Address 0x00: 00 00 00 00 00 00 00 00 00 00 00 00 00 00 00 00
I2C Hex Data:
 Address 0x00: 00 00 00 00 0a f1 00 00 00 00 00 00 00 00 00 00
 Address 0x10: 00 00 00 00 42 55 49 4c 54 49 4e 00 25 73 3a 20
 Address 0x20: 42 55 49 4c 54 49 4e 00 25 73 3a 20 00 00 00 00
 Address 0x30: 00 00 00 00 00 00 00 00 00 00 00 00 00 00 00 00
 Address 0x40: 00 00 00 00 00 00 00 00 00 00 00 00 00 00 00 00
 Address 0x50: 00 00 00 00 00 00 00 00 00 00 00 00 00 00 00 00
 Address 0x60: 00 00 00 00 00 00 00 00 00 00 00 00 00 00 00 00
 Address 0x70: 00 00 00 00 83 80 b1 f3 00 00 00 00 0a f1 00 00
   Xcvr 0       REV 01   740-045627   QH080366          40GBASE eSR4
   Xcvr 1       REV 01   740-054053   XYJ0A4P           QSFP+-4X10G-SR
 PIC 2                   BUILTIN      BUILTIN           4xQSFP28 MACSEC
Jedec Code:   0x0000            EEPROM Version:    0x00
P/N:          BUILTIN           S/N:               BUILTIN
Assembly ID:  0x0af1            Assembly Version:  00.00
Date:         00-00-0000        Assembly Flags:    0x00
ID: 4x QSFP28 10/40/100GE MACSec PIC
Board Information Record:
 Address 0x00: 00 00 00 00 00 00 00 00 00 00 00 00 00 00 00 00
I2C Hex Data:
 Address 0x00: 00 00 00 00 0a f1 00 00 00 00 00 00 00 00 00 00
 Address 0x10: 00 00 00 00 42 55 49 4c 54 49 4e 00 25 73 3a 20
 Address 0x20: 42 55 49 4c 54 49 4e 00 25 73 3a 20 00 00 00 00
 Address 0x30: 00 00 00 00 00 00 00 00 00 00 00 00 00 00 00 00
 Address 0x40: 00 00 00 00 00 00 00 00 00 00 00 00 00 00 00 00
 Address 0x50: 00 00 00 00 00 00 00 00 00 00 00 00 00 00 00 00
 Address 0x60: 00 00 00 00 00 00 00 00 00 00 00 00 00 00 00 00
 Address 0x70: 00 00 00 00 83 80 73 e8 00 00 00 00 00 00 00 00
   Xcvr 0       REV 01   740-058734   1ACQ113404E       QSFP-100GBASE-SR4
 PIC 3                   BUILTIN      BUILTIN           4xQSFP28 MACSEC
Jedec Code:   0x0000            EEPROM Version:    0x00
P/N:          BUILTIN           S/N:               BUILTIN
Assembly ID:  0x0af1            Assembly Version:  00.00
Date:         00-00-0000        Assembly Flags:    0x00
ID: 4x QSFP28 10/40/100GE MACSec PIC
Board Information Record:
 Address 0x00: 00 00 00 00 00 00 00 00 00 00 00 00 00 00 00 00
I2C Hex Data:
 Address 0x00: 00 00 00 00 0a f1 00 00 00 00 00 00 00 00 00 00
 Address 0x10: 00 00 00 00 42 55 49 4c 54 49 4e 00 25 73 3a 20
 Address 0x20: 42 55 49 4c 54 49 4e 00 25 73 3a 20 00 00 00 00
 Address 0x30: 00 00 00 00 00 00 00 00 00 00 00 00 00 00 00 00
 Address 0x40: 00 00 00 00 00 00 00 00 00 00 00 00 00 00 00 00
```

```
  Address 0x50: 00 00 00 00 00 00 00 00 00 00 00 00 00 00 00 00
  Address 0x60: 00 00 00 00 00 00 00 00 00 00 00 00 00 00 00 00
  Address 0x70: 00 00 00 00 83 80 51 ea 00 00 00 00 0a f1 00 00
    Xcvr 0       REV 01   740-058734   1ACQ1041018       QSFP-100GBASE-SR4
    Xcvr 1       REV 01   740-067443   XWS08JK           QSFP+-40G-SR4
    Xcvr 2       REV 01   740-032986   QF340C63          QSFP+-40G-SR4
    Xcvr 3       REV 01   740-067443   XWS08JL           QSFP+-40G-SR4
  PIC 4                   BUILTIN      BUILTIN           4xQSFP28 MACSEC
 Jedec Code:   0x0000            EEPROM Version:    0x00
 P/N:          BUILTIN           S/N:               BUILTIN
 Assembly ID:  0x0af1            Assembly Version:  00.00
 Date:         00-00-0000        Assembly Flags:    0x00
 ID: 4x QSFP28 10/40/100GE MACSec PIC
 Board Information Record:
  Address 0x00: 00 00 00 00 00 00 00 00 00 00 00 00 00 00 00 00
 I2C Hex Data:
  Address 0x00: 00 00 00 00 0a f1 00 00 00 00 00 00 00 00 00 00
  Address 0x10: 00 00 00 00 42 55 49 4c 54 49 4e 00 25 73 3a 20
  Address 0x20: 42 55 49 4c 54 49 4e 00 25 73 3a 20 00 00 00 00
  Address 0x30: 00 00 00 00 00 00 00 00 00 00 00 00 00 00 00 00
  Address 0x40: 00 00 00 00 00 00 00 00 00 00 00 00 00 00 00 00
  Address 0x50: 00 00 00 00 00 00 00 00 00 00 00 00 00 00 00 00
  Address 0x60: 00 00 00 00 00 00 00 00 00 00 00 00 00 00 00 00
  Address 0x70: 00 00 00 00 83 80 31 ec 00 00 00 00 0a f1 00 00
    Xcvr 0                NON-JNPR     37700171YY0083    QSFP-100GBASE-LR4
  PIC 5                   BUILTIN      BUILTIN           4xQSFP28 MACSEC
 Jedec Code:   0x0000            EEPROM Version:    0x00
 P/N:          BUILTIN           S/N:               BUILTIN
 Assembly ID:  0x0af1            Assembly Version:  00.00
 Date:         00-00-0000        Assembly Flags:    0x00
 ID: 4x QSFP28 10/40/100GE MACSec PIC
 Board Information Record:
  Address 0x00: 00 00 00 00 00 00 00 00 00 00 00 00 00 00 00 00
 I2C Hex Data:
  Address 0x00: 00 00 00 00 0a f1 00 00 00 00 00 00 00 00 00 00
  Address 0x10: 00 00 00 00 42 55 49 4c 54 49 4e 00 25 73 3a 20
  Address 0x20: 42 55 49 4c 54 49 4e 00 25 73 3a 20 00 00 00 00
  Address 0x30: 00 00 00 00 00 00 00 00 00 00 00 00 00 00 00 00
  Address 0x40: 00 00 00 00 00 00 00 00 00 00 00 00 00 00 00 00
  Address 0x50: 00 00 00 00 00 00 00 00 00 00 00 00 00 00 00 00
  Address 0x60: 00 00 00 00 00 00 00 00 00 00 00 00 00 00 00 00
  Address 0x70: 00 00 00 00 83 80 11 ee 00 00 00 00 0a f1 00 00
    Xcvr 0       REV 01   740-032986   QE201294          QSFP+-40G-SR4
    Xcvr 1       REV 01   740-046565   QH0603VK          QSFP+-40G-SR4
    Xcvr 2       REV 01   740-046565   QD510321          QSFP+-40G-SR4
    Xcvr 3       REV 01   740-054053   QF3208KP          QSFP+-4X10G-SR
FPC 2            REV 03   750-073174   CAJB6004          JNP10K-LC2102
 Jedec Code:   0x7fb0            EEPROM Version:    0x02
 P/N:          750-073174        S/N:               CAJB6004
 Assembly ID:  0x0ca5            Assembly Version:  01.03
 Date:         06-20-2017        Assembly Flags:    0x00
 Version:      REV 03            CLEI Code:         PROTOXCLEI
 ID: JNP10K-LC2102               FRU Model Number:  PROTO-ASSEMBLY
 Board Information Record:
  Address 0x00: ff ff ff ff ff ff ff ff ff ff ff ff ff ff ff ff
 I2C Hex Data:
  Address 0x00: 7f b0 02 ff 0c a5 01 03 52 45 56 20 30 33 00 00
  Address 0x10: 00 00 00 00 37 35 30 2d 30 37 33 31 37 34 00 00
  Address 0x20: 53 2f 4e 20 43 41 4a 42 36 30 30 34 00 14 06 07
  Address 0x30: e1 ff ff ff ff ff ff ff ff ff ff ff ff ff ff ff
  Address 0x40: ff ff ff ff 01 50 52 4f 54 4f 58 43 4c 45 49 50
```

```
 Address 0x50: 52 4f 54 4f 2d 41 53 53 45 4d 42 4c 59 00 00 00
 Address 0x60: 00 00 00 00 00 00 41 30 30 ff ff ff ff ff ff ff
 Address 0x70: ff ff ff c2 ff ff ff ff ff ff ff ff ff ff ff ff
 CPU            REV 01   750-073391   CAHM7956          LC 2101 PMB
Jedec Code:   0x7fb0            EEPROM Version:    0x02
P/N:          750-073391        S/N:               CAHM7956
Assembly ID:  0x0cda            Assembly Version:  01.01
Date:         05-08-2017        Assembly Flags:    0x00
Version:      REV 01
ID: LC 2101 PMB
Board Information Record:
 Address 0x00: ff ff ff ff ff ff ff ff ff ff ff ff ff ff ff ff
I2C Hex Data:
 Address 0x00: 7f b0 02 ff 0c da 01 01 52 45 56 20 30 31 00 00
 Address 0x10: 00 00 00 00 37 35 30 2d 30 37 33 33 39 31 00 00
 Address 0x20: 53 2f 4e 20 43 41 48 4d 37 39 35 36 00 08 05 07
 Address 0x30: e1 ff ff ff ff ff ff ff ff ff ff ff ff ff ff ff
 Address 0x40: ff ff ff ff ff 00 50 52 4f 54 4f 58 43 4c 45 49 50
 Address 0x50: 52 4f 54 4f 2d 41 53 53 45 4d 42 4c 59 00 00 00
 Address 0x60: 00 00 00 00 00 00 41 30 30 ff ff ff ff ff ff ff
 Address 0x70: ff ff ff c2 00 00 00 00 00 00 00 00 00 00 00 00
 PIC 0                  BUILTIN      BUILTIN           4xQSFP28 MACSEC
Jedec Code:   0x0000            EEPROM Version:    0x00
P/N:          BUILTIN           S/N:               BUILTIN
Assembly ID:  0x0af1            Assembly Version:  00.00
Date:         00-00-0000        Assembly Flags:    0x00
ID: 4x QSFP28 10/40/100GE MACSec PIC
Board Information Record:
 Address 0x00: 00 00 00 00 00 00 00 00 00 00 00 00 00 00 00 00
I2C Hex Data:
 Address 0x00: 00 00 00 00 0a f1 00 00 00 00 00 00 00 00 00 00
 Address 0x10: 00 00 00 00 42 55 49 4c 54 49 4e 00 25 73 3a 20
 Address 0x20: 42 55 49 4c 54 49 4e 00 25 73 3a 20 00 00 00 00
 Address 0x30: 00 00 00 00 00 00 00 00 00 00 00 00 00 00 00 00
 Address 0x40: 00 00 00 00 00 00 00 00 00 00 00 00 00 00 00 00
 Address 0x50: 00 00 00 00 00 00 00 00 00 00 00 00 00 00 00 00
 Address 0x60: 00 00 00 00 00 00 00 00 00 00 00 00 00 00 00 00
 Address 0x70: 00 00 00 00 83 00 d1 f1 00 00 00 00 0a f1 00 00
   Xcvr 0       REV 01   740-061405   1ACQ12110JK       QSFP-100GBASE-SR4
 PIC 1                  BUILTIN      BUILTIN           4xQSFP28 MACSEC
Jedec Code:   0x0000            EEPROM Version:    0x00
P/N:          BUILTIN           S/N:               BUILTIN
Assembly ID:  0x0af1            Assembly Version:  00.00
Date:         00-00-0000        Assembly Flags:    0x00
ID: 4x QSFP28 10/40/100GE MACSec PIC
Board Information Record:
 Address 0x00: 00 00 00 00 00 00 00 00 00 00 00 00 00 00 00 00
I2C Hex Data:
 Address 0x00: 00 00 00 00 0a f1 00 00 00 00 00 00 00 00 00 00
 Address 0x10: 00 00 00 00 42 55 49 4c 54 49 4e 00 25 73 3a 20
 Address 0x20: 42 55 49 4c 54 49 4e 00 25 73 3a 20 00 00 00 00
 Address 0x30: 00 00 00 00 00 00 00 00 00 00 00 00 00 00 00 00
 Address 0x40: 00 00 00 00 00 00 00 00 00 00 00 00 00 00 00 00
 Address 0x50: 00 00 00 00 00 00 00 00 00 00 00 00 00 00 00 00
 Address 0x60: 00 00 00 00 00 00 00 00 00 00 00 00 00 00 00 00
 Address 0x70: 00 00 00 00 83 80 b1 f3 00 00 00 00 0a f1 00 00
   Xcvr 0       REV 01   740-046565   XYH0P6F           QSFP+-40G-SR4
 PIC 2                  BUILTIN      BUILTIN           4xQSFP28 MACSEC
Jedec Code:   0x0000            EEPROM Version:    0x00
P/N:          BUILTIN           S/N:               BUILTIN
Assembly ID:  0x0af1            Assembly Version:  00.00
```

```
Date:         00-00-0000        Assembly Flags:    0x00
ID: 4x QSFP28 10/40/100GE MACSec PIC
Board Information Record:
 Address 0x00: 00 00 00 00 00 00 00 00 00 00 00 00 00 00 00 00
I2C Hex Data:
 Address 0x00: 00 00 00 00 0a f1 00 00 00 00 00 00 00 00 00 00
 Address 0x10: 00 00 00 00 42 55 49 4c 54 49 4e 00 25 73 3a 20
 Address 0x20: 42 55 49 4c 54 49 4e 00 25 73 3a 20 00 00 00 00
 Address 0x30: 00 00 00 00 00 00 00 00 00 00 00 00 00 00 00 00
 Address 0x40: 00 00 00 00 00 00 00 00 00 00 00 00 00 00 00 00
 Address 0x50: 00 00 00 00 00 00 00 00 00 00 00 00 00 00 00 00
 Address 0x60: 00 00 00 00 00 00 00 00 00 00 00 00 00 00 00 00
 Address 0x70: 00 00 00 00 83 80 73 e8 00 00 00 00 00 00 00 00
   Xcvr 0       REV 01   740-067442   XX401TT           QSFP+-40G-SR4
   Xcvr 1       REV 01   740-067443   XV3002D           QSFP+-40G-SR4
   Xcvr 2       REV 01   740-067442   XX401SL           QSFP+-40G-SR4
   Xcvr 3       REV 01   740-067443   XV30A78           QSFP+-40G-SR4
 PIC 3                   BUILTIN      BUILTIN           4xQSFP28 MACSEC
Jedec Code:   0x0000            EEPROM Version:    0x00
P/N:          BUILTIN           S/N:               BUILTIN
Assembly ID:  0x0af1            Assembly Version:  00.00
Date:         00-00-0000        Assembly Flags:    0x00
ID: 4x QSFP28 10/40/100GE MACSec PIC
Board Information Record:
 Address 0x00: 00 00 00 00 00 00 00 00 00 00 00 00 00 00 00 00
I2C Hex Data:
 Address 0x00: 00 00 00 00 0a f1 00 00 00 00 00 00 00 00 00 00
 Address 0x10: 00 00 00 00 42 55 49 4c 54 49 4e 00 25 73 3a 20
 Address 0x20: 42 55 49 4c 54 49 4e 00 25 73 3a 20 00 00 00 00
 Address 0x30: 00 00 00 00 00 00 00 00 00 00 00 00 00 00 00 00
 Address 0x40: 00 00 00 00 00 00 00 00 00 00 00 00 00 00 00 00
 Address 0x50: 00 00 00 00 00 00 00 00 00 00 00 00 00 00 00 00
 Address 0x60: 00 00 00 00 00 00 00 00 00 00 00 00 00 00 00 00
 Address 0x70: 00 00 00 00 83 80 51 ea 00 00 00 00 0a f1 00 00
   Xcvr 0       REV 01   740-067442   XX401T2           QSFP+-40G-SR4
   Xcvr 1       REV 01   740-067442   XX401SZ           QSFP+-40G-SR4
 PIC 4                   BUILTIN      BUILTIN           4xQSFP28 MACSEC
Jedec Code:   0x0000            EEPROM Version:    0x00
P/N:          BUILTIN           S/N:               BUILTIN
Assembly ID:  0x0af1            Assembly Version:  00.00
Date:         00-00-0000        Assembly Flags:    0x00
ID: 4x QSFP28 10/40/100GE MACSec PIC
Board Information Record:
 Address 0x00: 00 00 00 00 00 00 00 00 00 00 00 00 00 00 00 00
I2C Hex Data:
 Address 0x00: 00 00 00 00 0a f1 00 00 00 00 00 00 00 00 00 00
 Address 0x10: 00 00 00 00 42 55 49 4c 54 49 4e 00 25 73 3a 20
 Address 0x20: 42 55 49 4c 54 49 4e 00 25 73 3a 20 00 00 00 00
 Address 0x30: 00 00 00 00 00 00 00 00 00 00 00 00 00 00 00 00
 Address 0x40: 00 00 00 00 00 00 00 00 00 00 00 00 00 00 00 00
 Address 0x50: 00 00 00 00 00 00 00 00 00 00 00 00 00 00 00 00
 Address 0x60: 00 00 00 00 00 00 00 00 00 00 00 00 00 00 00 00
 Address 0x70: 00 00 00 00 83 80 31 ec 00 00 00 00 0a f1 00 00
   Xcvr 0       REV 01   740-061405   1ACQ12110JS       QSFP-100GBASE-SR4
   Xcvr 1       REV 01   740-061405   1ACQ12110JP       QSFP-100GBASE-SR4
   Xcvr 2       REV 01   740-061405   1ACQ12110JQ       QSFP-100GBASE-SR4
   Xcvr 3       REV 01   740-061405   1ACQ121109R       QSFP-100GBASE-SR4
 PIC 5                   BUILTIN      BUILTIN           4xQSFP28 MACSEC
Jedec Code:   0x0000            EEPROM Version:    0x00
P/N:          BUILTIN           S/N:               BUILTIN
Assembly ID:  0x0af1            Assembly Version:  00.00
```

```
  Date:         00-00-0000        Assembly Flags:    0x00
  ID: 4x QSFP28 10/40/100GE MACSec PIC
  Board Information Record:
   Address 0x00: 00 00 00 00 00 00 00 00 00 00 00 00 00 00 00 00
  I2C Hex Data:
   Address 0x00: 00 00 00 00 0a f1 00 00 00 00 00 00 00 00 00 00
   Address 0x10: 00 00 00 00 42 55 49 4c 54 49 4e 00 25 73 3a 20
   Address 0x20: 42 55 49 4c 54 49 4e 00 25 73 3a 20 00 00 00 00
   Address 0x30: 00 00 00 00 00 00 00 00 00 00 00 00 00 00 00 00
   Address 0x40: 00 00 00 00 00 00 00 00 00 00 00 00 00 00 00 00
   Address 0x50: 00 00 00 00 00 00 00 00 00 00 00 00 00 00 00 00
   Address 0x60: 00 00 00 00 00 00 00 00 00 00 00 00 00 00 00 00
   Address 0x70: 00 00 00 00 83 80 11 ee 00 00 00 00 0a f1 00 00
     Xcvr 0       REV 01   740-061405   1ACQ121109P       QSFP-100GBASE-SR4
     Xcvr 1       REV 01   740-061405   1ACQ12110JC       QSFP-100GBASE-SR4
FPC 3             REV 04   750-084779   CAKR7019          JNP10K-LC2101
  Jedec Code:   0x7fb0            EEPROM Version:    0x02
  P/N:          750-084779        S/N:               CAKR7019
  Assembly ID:  0x0cff            Assembly Version:  01.04
  Date:         03-11-2018        Assembly Flags:    0x00
  Version:      REV 04            CLEI Code:         PROTOXCLEI
  ID: JNP10K-LC2101               FRU Model Number:  PROTO-ASSEMBLY
  Board Information Record:
   Address 0x00: ff ff ff ff ff ff ff ff ff ff ff ff ff ff ff ff
  I2C Hex Data:
   Address 0x00: 7f b0 02 ff 0c ff 01 04 52 45 56 20 30 34 00 00
   Address 0x10: 00 00 00 00 37 35 30 2d 30 38 34 37 37 39 00 00
   Address 0x20: 53 2f 4e 20 43 41 4b 52 37 30 31 39 00 0b 03 07
   Address 0x30: e2 ff ff ff ff ff ff ff ff ff ff ff ff ff ff ff
   Address 0x40: ff ff ff ff 01 50 52 4f 54 4f 58 43 4c 45 49 50
   Address 0x50: 52 4f 54 4f 2d 41 53 53 45 4d 42 4c 59 00 00 00
   Address 0x60: 00 00 00 00 00 00 41 30 30 ff ff ff ff ff ff ff
   Address 0x70: ff ff ff c2 ff ff ff ff ff ff ff ff ff ff ff ff
   CPU           REV 05   750-073391   CAKJ2854          LC 2101 PMB
  Jedec Code:   0x7fb0            EEPROM Version:    0x01
  P/N:          750-073391        S/N:               CAKJ2854
  Assembly ID:  0x0cda            Assembly Version:  01.05
  Date:         03-12-2018        Assembly Flags:    0x00
  Version:      REV 05
  ID: LC 2101 PMB
  Board Information Record:
   Address 0x00: ff ff ff ff ff ff ff ff ff ff ff ff ff ff ff ff
  I2C Hex Data:
   Address 0x00: 7f b0 01 ff 0c da 01 05 52 45 56 20 30 35 00 00
   Address 0x10: 00 00 00 00 37 35 30 2d 30 37 33 33 39 31 00 00
   Address 0x20: 53 2f 4e 20 43 41 4b 4a 32 38 35 34 00 0c 03 07
   Address 0x30: e2 ff ff ff ff ff ff ff ff ff ff ff ff ff ff ff
   Address 0x40: ff ff ff ff 00 ff ff ff ff ff ff ff ff ff ff ff
   Address 0x50: ff ff ff ff ff ff ff ff ff ff ff ff ff ff ff ff
   Address 0x60: ff ff ff ff ff ff ff ff ff ff ff ff ff ff ff ff
   Address 0x70: ff ff ff ff 00 00 00 00 00 00 00 00 00 00 00 00
   PIC 0                  BUILTIN      BUILTIN           4xQSFP28 SYNCE
  Jedec Code:   0x0000            EEPROM Version:    0x00
  P/N:          BUILTIN           S/N:               BUILTIN
  Assembly ID:  0x0af3            Assembly Version:  00.00
  Date:         00-00-0000        Assembly Flags:    0x00
  ID: 4x QSFP28 10/40/100GE SYNCE PIC
  Board Information Record:
   Address 0x00: 00 00 00 00 00 00 00 00 00 00 00 00 00 00 00 00
  I2C Hex Data:
   Address 0x00: 00 00 00 00 0a f3 00 00 00 00 00 00 00 00 00 00
```

```
 Address 0x10: 00 00 00 00 42 55 49 4c 54 49 4e 00 25 73 3a 20
 Address 0x20: 42 55 49 4c 54 49 4e 00 25 73 3a 20 00 00 00 00
 Address 0x30: 00 00 00 00 00 00 00 00 00 00 00 00 00 00 00 00
 Address 0x40: 00 00 00 00 00 00 00 00 00 00 00 00 00 00 00 00
 Address 0x50: 00 00 00 00 00 00 00 00 00 00 00 00 00 00 00 00
 Address 0x60: 00 00 00 00 00 00 00 00 00 00 00 00 00 00 00 00
 Address 0x70: 00 00 00 00 83 00 b1 f3 00 00 00 00 0a f3 00 00
   Xcvr 0       REV 01   740-058734   1ACQ104300K       QSFP-100GBASE-SR4
 PIC 1                   BUILTIN      BUILTIN           4xQSFP28 SYNCE
Jedec Code:   0x0000            EEPROM Version:    0x00
P/N:          BUILTIN           S/N:               BUILTIN
Assembly ID:  0x0af3            Assembly Version:  00.00
Date:         00-00-0000        Assembly Flags:    0x00
ID: 4x QSFP28 10/40/100GE SYNCE PIC
Board Information Record:
 Address 0x00: 00 00 00 00 00 00 00 00 00 00 00 00 00 00 00 00
I2C Hex Data:
 Address 0x00: 00 00 00 00 0a f3 00 00 00 00 00 00 00 00 00 00
 Address 0x10: 00 00 00 00 42 55 49 4c 54 49 4e 00 25 73 3a 20
 Address 0x20: 42 55 49 4c 54 49 4e 00 25 73 3a 20 00 00 00 00
 Address 0x30: 00 00 00 00 00 00 00 00 00 00 00 00 00 00 00 00
 Address 0x40: 00 00 00 00 00 00 00 00 00 00 00 00 00 00 00 00
 Address 0x50: 00 00 00 00 00 00 00 00 00 00 00 00 00 00 00 00
 Address 0x60: 00 00 00 00 00 00 00 00 00 00 00 00 00 00 00 00
 Address 0x70: 00 00 00 00 00 00 00 00 00 00 00 00 00 00 00 00
   Xcvr 0       REV 01   740-061405   1ACQ12110AN       QSFP-100GBASE-SR4
 PIC 2                   BUILTIN      BUILTIN           4xQSFP28 SYNCE
Jedec Code:   0x0000            EEPROM Version:    0x00
P/N:          BUILTIN           S/N:               BUILTIN
Assembly ID:  0x0af3            Assembly Version:  00.00
Date:         00-00-0000        Assembly Flags:    0x00
ID: 4x QSFP28 10/40/100GE SYNCE PIC
Board Information Record:
 Address 0x00: 00 00 00 00 00 00 00 00 00 00 00 00 00 00 00 00
I2C Hex Data:
 Address 0x00: 00 00 00 00 0a f3 00 00 00 00 00 00 00 00 00 00
 Address 0x10: 00 00 00 00 42 55 49 4c 54 49 4e 00 25 73 3a 20
 Address 0x20: 42 55 49 4c 54 49 4e 00 25 73 3a 20 00 00 00 00
 Address 0x30: 00 00 00 00 00 00 00 00 00 00 00 00 00 00 00 00
 Address 0x40: 00 00 00 00 00 00 00 00 00 00 00 00 00 00 00 00
 Address 0x50: 00 00 00 00 00 00 00 00 00 00 00 00 00 00 00 00
 Address 0x60: 00 00 00 00 00 00 00 00 00 00 00 00 00 00 00 00
 Address 0x70: 00 00 00 00 83 80 b1 8a b5 cf 0b 5f 08 00 73 6d
   Xcvr 0       REV 01   740-046565   QG1105B2          QSFP+-40G-SR4
 PIC 3                   BUILTIN      BUILTIN           4xQSFP28 SYNCE
Jedec Code:   0x0000            EEPROM Version:    0x00
P/N:          BUILTIN           S/N:               BUILTIN
Assembly ID:  0x0af3            Assembly Version:  00.00
Date:         00-00-0000        Assembly Flags:    0x00
ID: 4x QSFP28 10/40/100GE SYNCE PIC
Board Information Record:
 Address 0x00: 00 00 00 00 00 00 00 00 00 00 00 00 00 00 00 00
I2C Hex Data:
 Address 0x00: 00 00 00 00 0a f3 00 00 00 00 00 00 00 00 00 00
 Address 0x10: 00 00 00 00 42 55 49 4c 54 49 4e 00 25 73 3a 20
 Address 0x20: 42 55 49 4c 54 49 4e 00 25 73 3a 20 00 00 00 00
 Address 0x30: 00 00 00 00 00 00 00 00 00 00 00 00 00 00 00 00
 Address 0x40: 00 00 00 00 00 00 00 00 00 00 00 00 00 00 00 00
 Address 0x50: 00 00 00 00 00 00 00 00 00 00 00 00 00 00 00 00
 Address 0x60: 00 00 00 00 00 00 00 00 00 00 00 00 00 00 00 00
 Address 0x70: 00 00 00 00 83 80 11 94 b5 cf 0b 5f 0c 00 73 6d
```

```
    Xcvr 0       REV 01   740-045627   QH08036X          40GBASE eSR4
  PIC 4                   BUILTIN      BUILTIN           4xQSFP28 SYNCE
 Jedec Code:   0x0000            EEPROM Version:    0x00
 P/N:          BUILTIN           S/N:               BUILTIN
 Assembly ID:  0x0af3            Assembly Version:  00.00
 Date:         00-00-0000        Assembly Flags:    0x00
 ID: 4x QSFP28 10/40/100GE SYNCE PIC
 Board Information Record:
  Address 0x00: 00 00 00 00 00 00 00 00 00 00 00 00 00 00 00 00
 I2C Hex Data:
  Address 0x00: 00 00 00 00 0a f3 00 00 00 00 00 00 00 00 00 00
  Address 0x10: 00 00 00 00 42 55 49 4c 54 49 4e 00 25 73 3a 20
  Address 0x20: 42 55 49 4c 54 49 4e 00 25 73 3a 20 00 00 00 00
  Address 0x30: 00 00 00 00 00 00 00 00 00 00 00 00 00 00 00 00
  Address 0x40: 00 00 00 00 00 00 00 00 00 00 00 00 00 00 00 00
  Address 0x50: 00 00 00 00 00 00 00 00 00 00 00 00 00 00 00 00
  Address 0x60: 00 00 00 00 00 00 00 00 00 00 00 00 00 00 00 00
  Address 0x70: 00 00 00 00 83 80 71 9d b5 cf 0b 5f 10 00 73 6d
    Xcvr 0       REV 01   740-067443   XWR0RY7           QSFP+-40G-SR4
    Xcvr 1       REV 01   740-067443   XWR0RYH           QSFP+-40G-SR4
    Xcvr 2       REV 01   740-067443   XWR0RYP           QSFP+-40G-SR4
    Xcvr 3       REV 01   740-067443   XWS028S           QSFP+-40G-SR4
  PIC 5                   BUILTIN      BUILTIN           4xQSFP28 SYNCE
 Jedec Code:   0x0000            EEPROM Version:    0x00
 P/N:          BUILTIN           S/N:               BUILTIN
 Assembly ID:  0x0af3            Assembly Version:  00.00
 Date:         00-00-0000        Assembly Flags:    0x00
 ID: 4x QSFP28 10/40/100GE SYNCE PIC
 Board Information Record:
  Address 0x00: 00 00 00 00 00 00 00 00 00 00 00 00 00 00 00 00
 I2C Hex Data:
  Address 0x00: 00 00 00 00 0a f3 00 00 00 00 00 00 00 00 00 00
  Address 0x10: 00 00 00 00 42 55 49 4c 54 49 4e 00 25 73 3a 20
  Address 0x20: 42 55 49 4c 54 49 4e 00 25 73 3a 20 00 00 00 00
  Address 0x30: 00 00 00 00 00 00 00 00 00 00 00 00 00 00 00 00
  Address 0x40: 00 00 00 00 00 00 00 00 00 00 00 00 00 00 00 00
  Address 0x50: 00 00 00 00 00 00 00 00 00 00 00 00 00 00 00 00
  Address 0x60: 00 00 00 00 00 00 00 00 00 00 00 00 00 00 00 00
  Address 0x70: 00 00 00 00 83 80 d1 a6 b5 cf 0b 5f 14 00 73 6d
    Xcvr 3       REV 01   740-058734   1ACQ113406C       QSFP-100GBASE-SR4
FPD Board        REV 07   711-054687   ACPC7142          Front Panel Display
 Jedec Code:   0x7fb0            EEPROM Version:    0x01
 P/N:          711-054687        S/N:               ACPC7142
 Assembly ID:  0x0bf2            Assembly Version:  01.07
 Date:         07-22-2016        Assembly Flags:    0x00
 Version:      REV 07
 ID: Front Panel Display
 Board Information Record:
  Address 0x00: ff ff ff ff ff ff ff ff ff ff ff ff ff ff ff ff
 I2C Hex Data:
  Address 0x00: 7f b0 01 ff 0b f2 01 07 52 45 56 20 30 37 00 00
  Address 0x10: 00 00 00 00 37 31 31 2d 30 35 34 36 38 37 00 00
  Address 0x20: 53 2f 4e 20 41 43 50 43 37 31 34 32 00 16 07 07
  Address 0x30: e0 ff ff ff ff ff ff ff ff ff ff ff ff ff ff ff
  Address 0x40: ff ff ff ff ff ff ff ff ff ff ff ff ff ff ff ff
  Address 0x50: ff ff ff ff ff ff ff ff ff ff ff ff ff ff ff ff
  Address 0x60: ff ff ff ff ff ff ff ff ff ff ff ff ff ff ff ff
  Address 0x70: ff ff ff ff ff ff ff ff ff ff ff ff ff ff ff ff
PEM 0            REV 02   740-049388   1EDL62102N9       Power Supply AC
 Jedec Code:   0x7fb0            EEPROM Version:    0x02
 P/N:          740-049388        S/N:               1EDL62102N9
```

```
 Assembly ID:  0x0483            Assembly Version:  01.02
 Date:         05-25-2016        Assembly Flags:    0x00
 Version:      REV 02            CLEI Code:         CMUPADNBAA
 ID: Power Supply AC             FRU Model Number:  QFX10000-PWR-AC
 Board Information Record:
  Address 0x00: ff ff ff ff ff ff ff ff ff ff ff ff ff ff ff ff
 I2C Hex Data:
  Address 0x00: 7f b0 02 ff 04 83 01 02 52 45 56 20 30 32 00 00
  Address 0x10: 00 00 00 00 37 34 30 2d 30 34 39 33 38 38 00 00
  Address 0x20: 31 45 44 4c 36 32 31 30 32 4e 39 00 00 19 05 07
  Address 0x30: e0 ff ff ff ff ff ff ff ff ff ff ff ff ff ff ff
  Address 0x40: ff ff ff ff 01 43 4d 55 50 41 44 4e 42 41 41 51
  Address 0x50: 46 58 31 30 30 30 30 2d 50 57 52 2d 41 43 00 00
  Address 0x60: 00 00 00 00 00 00 01 30 31 ff ff ff ff ff ff ff
  Address 0x70: ff ff ff dc ff ff ff ff ff ff ff ff ff ff ff ff
PEM 1            REV 02   740-049388   1EDL60300KX       Power Supply AC
 Jedec Code:   0x00b0            EEPROM Version:    0x02
 P/N:          740-049388        S/N:               1EDL60300KX
 Assembly ID:  0x0483            Assembly Version:  01.02
 Date:         01-20-2016        Assembly Flags:    0x00
 Version:      REV 02            CLEI Code:         CMUPADNBAA
 ID: Power Supply AC             FRU Model Number:  QFX10000-PWR-AC
 Board Information Record:
  Address 0x00: ff ff ff ff ff ff ff ff ff ff ff ff ff ff ff ff
 I2C Hex Data:
  Address 0x00: 00 b0 02 ff 04 83 01 02 52 45 56 20 30 32 00 00
  Address 0x10: 00 00 00 00 37 34 30 2d 30 34 39 33 38 38 00 00
  Address 0x20: 31 45 44 4c 36 30 33 30 30 4b 58 00 00 14 01 07
  Address 0x30: e0 ff ff ff ff ff ff ff ff ff ff ff ff ff ff ff
  Address 0x40: ff ff ff ff 01 43 4d 55 50 41 44 4e 42 41 41 51
  Address 0x50: 46 58 31 30 30 30 30 2d 50 57 52 2d 41 43 00 00
  Address 0x60: 00 00 00 00 00 00 01 30 31 ff ff ff ff ff ff ff
  Address 0x70: ff ff ff dc ff ff ff ff ff ff ff ff ff ff ff ff
PEM 2            REV 02   740-049388   1EDL60300DL       Power Supply AC
 Jedec Code:   0x7fb0            EEPROM Version:    0x02
 P/N:          740-049388        S/N:               1EDL60300DL
 Assembly ID:  0x0483            Assembly Version:  01.02
 Date:         01-20-2016        Assembly Flags:    0x00
 Version:      REV 02            CLEI Code:         CMUPADNBAA
 ID: Power Supply AC             FRU Model Number:  QFX10000-PWR-AC
 Board Information Record:
  Address 0x00: ff ff ff ff ff ff ff ff ff ff ff ff ff ff ff ff
 I2C Hex Data:
  Address 0x00: 7f b0 02 ff 04 83 01 02 52 45 56 20 30 32 00 00
  Address 0x10: 00 00 00 00 37 34 30 2d 30 34 39 33 38 38 00 00
  Address 0x20: 31 45 44 4c 36 30 33 30 30 44 4c 00 00 14 01 07
  Address 0x30: e0 ff ff ff ff ff ff ff ff ff ff ff ff ff ff ff
  Address 0x40: ff ff ff ff 01 43 4d 55 50 41 44 4e 42 41 41 51
  Address 0x50: 46 58 31 30 30 30 30 2d 50 57 52 2d 41 43 00 00
  Address 0x60: 00 00 00 00 00 00 01 30 31 ff ff ff ff ff ff ff
  Address 0x70: ff ff ff dc ff ff ff ff ff ff ff ff ff ff ff ff
PEM 3            REV 02   740-049388   1EDL61701BT       Power Supply AC
 Jedec Code:   0x7fb0            EEPROM Version:    0x02
 P/N:          740-049388        S/N:               1EDL61701BT
 Assembly ID:  0x0483            Assembly Version:  01.02
 Date:         05-01-2016        Assembly Flags:    0x00
 Version:      REV 02            CLEI Code:         CMUPADNBAA
 ID: Power Supply AC             FRU Model Number:  QFX10000-PWR-AC
 Board Information Record:
  Address 0x00: ff ff ff ff ff ff ff ff ff ff ff ff ff ff ff ff
 I2C Hex Data:
```

```
  Address 0x00: 7f b0 02 ff 04 83 01 02 52 45 56 20 30 32 00 00
  Address 0x10: 00 00 00 00 37 34 30 2d 30 34 39 33 38 38 00 00
  Address 0x20: 31 45 44 4c 36 31 37 30 31 42 54 00 00 01 05 07
  Address 0x30: e0 ff ff ff ff ff ff ff ff ff ff ff ff ff ff ff
  Address 0x40: ff ff ff ff 01 43 4d 55 50 41 44 4e 42 41 41 51
  Address 0x50: 46 58 31 30 30 30 30 2d 50 57 52 2d 41 43 00 00
  Address 0x60: 00 00 00 00 00 00 01 30 31 ff ff ff ff ff ff ff
  Address 0x70: ff ff ff dc ff ff ff ff ff ff ff ff ff ff ff ff
PEM 4            REV 02   740-049388   1EDL62102P7       Power Supply AC
 Jedec Code:   0x7fb0            EEPROM Version:    0x02
 P/N:          740-049388        S/N:               1EDL62102P7
 Assembly ID:  0x0483            Assembly Version:  01.02
 Date:         05-25-2016        Assembly Flags:    0x00
 Version:      REV 02            CLEI Code:         CMUPADNBAA
 ID: Power Supply AC             FRU Model Number:  QFX10000-PWR-AC
 Board Information Record:
  Address 0x00: ff ff ff ff ff ff ff ff ff ff ff ff ff ff ff ff
 I2C Hex Data:
  Address 0x00: 7f b0 02 ff 04 83 01 02 52 45 56 20 30 32 00 00
  Address 0x10: 00 00 00 00 37 34 30 2d 30 34 39 33 38 38 00 00
  Address 0x20: 31 45 44 4c 36 32 31 30 32 50 37 00 00 19 05 07
  Address 0x30: e0 ff ff ff ff ff ff ff ff ff ff ff ff ff ff ff
  Address 0x40: ff ff ff ff 01 43 4d 55 50 41 44 4e 42 41 41 51
  Address 0x50: 46 58 31 30 30 30 30 2d 50 57 52 2d 41 43 00 00
  Address 0x60: 00 00 00 00 00 00 01 30 31 ff ff ff ff ff ff ff
  Address 0x70: ff ff ff dc ff ff ff ff ff ff ff ff ff ff ff ff
PEM 5            REV 02   740-049388   1EDL62102PP       Power Supply AC
 Jedec Code:   0x7fb0            EEPROM Version:    0x02
 P/N:          740-049388        S/N:               1EDL62102PP
 Assembly ID:  0x0483            Assembly Version:  01.02
 Date:         05-25-2016        Assembly Flags:    0x00
 Version:      REV 02            CLEI Code:         CMUPADNBAA
 ID: Power Supply AC             FRU Model Number:  QFX10000-PWR-AC
 Board Information Record:
  Address 0x00: ff ff ff ff ff ff ff ff ff ff ff ff ff ff ff ff
 I2C Hex Data:
  Address 0x00: 7f b0 02 ff 04 83 01 02 52 45 56 20 30 32 00 00
  Address 0x10: 00 00 00 00 37 34 30 2d 30 34 39 33 38 38 00 00
  Address 0x20: 31 45 44 4c 36 32 31 30 32 50 50 00 00 19 05 07
  Address 0x30: e0 ff ff ff ff ff ff ff ff ff ff ff ff ff ff ff
  Address 0x40: ff ff ff ff 01 43 4d 55 50 41 44 4e 42 41 41 51
  Address 0x50: 46 58 31 30 30 30 30 2d 50 57 52 2d 41 43 00 00
  Address 0x60: 00 00 00 00 00 00 01 30 31 ff ff ff ff ff ff ff
  Address 0x70: ff ff ff dc ff ff ff ff ff ff ff ff ff ff ff ff
FTC 0            REV 14   750-050108   ACPE4038          Fan Controller 8
 Jedec Code:   0x7fb0            EEPROM Version:    0x02
 P/N:          750-050108        S/N:               ACPE4038
 Assembly ID:  0x0bee            Assembly Version:  01.14
 Date:         09-27-2016        Assembly Flags:    0x00
 Version:      REV 14            CLEI Code:         CMUCAHZCAA
 ID: Fan Controller 8            FRU Model Number:  QFX10008-FAN-CTRL
 Board Information Record:
  Address 0x00: ff ff ff ff ff ff ff ff ff ff ff ff ff ff ff ff
 I2C Hex Data:
  Address 0x00: 7f b0 02 ff 0b ee 01 0e 52 45 56 20 31 34 00 00
  Address 0x10: 00 00 00 00 37 35 30 2d 30 35 30 31 30 38 00 00
  Address 0x20: 53 2f 4e 20 41 43 50 45 34 30 33 38 00 1b 09 07
  Address 0x30: e0 ff ff ff ff ff ff ff ff ff ff ff ff ff ff ff
  Address 0x40: ff ff ff ff 01 43 4d 55 43 41 48 5a 43 41 41 51
  Address 0x50: 46 58 31 30 30 30 38 2d 46 41 4e 2d 43 54 52 4c
  Address 0x60: 00 00 00 00 00 00 41 44 00 ff ff ff ff ff ff ff
```

```
  Address 0x70: ff ff ff 98 ff ff ff ff ff ff ff ff ff ff ff ff
FTC 1            REV 14   750-050108   ACPE4032          Fan Controller 8
 Jedec Code:   0x7fb0            EEPROM Version:    0x02
 P/N:          750-050108        S/N:               ACPE4032
 Assembly ID:  0x0bee            Assembly Version:  01.14
 Date:         09-27-2016        Assembly Flags:    0x00
 Version:      REV 14            CLEI Code:         CMUCAHZCAA
 ID: Fan Controller 8            FRU Model Number:  QFX10008-FAN-CTRL
 Board Information Record:
  Address 0x00: ff ff ff ff ff ff ff ff ff ff ff ff ff ff ff ff
 I2C Hex Data:
  Address 0x00: 7f b0 02 ff 0b ee 01 0e 52 45 56 20 31 34 00 00
  Address 0x10: 00 00 00 00 37 35 30 2d 30 35 30 31 30 38 00 00
  Address 0x20: 53 2f 4e 20 41 43 50 45 34 30 33 32 00 1b 09 07
  Address 0x30: e0 ff ff ff ff ff ff ff ff ff ff ff ff ff ff ff
  Address 0x40: ff ff ff ff 01 43 4d 55 43 41 48 5a 43 41 41 51
  Address 0x50: 46 58 31 30 30 30 38 2d 46 41 4e 2d 43 54 52 4c
  Address 0x60: 00 00 00 00 00 00 41 44 00 ff ff ff ff ff ff ff
  Address 0x70: ff ff ff 98 ff ff ff ff ff ff ff ff ff ff ff ff
Fan Tray 0       REV 09   760-054372   ACPD6799          Fan Tray 8
 Jedec Code:   0x7fb0            EEPROM Version:    0x02
 P/N:          760-054372        S/N:               ACPD6799
 Assembly ID:  0x0bf0            Assembly Version:  01.09
 Date:         09-28-2016        Assembly Flags:    0x00
 Version:      REV 09            CLEI Code:         CMUCAHYCAA
 ID: Fan Tray 8                  FRU Model Number:  QFX10008-FAN
 Board Information Record:
  Address 0x00: ff ff ff ff ff ff ff ff ff ff ff ff ff ff ff ff
 I2C Hex Data:
  Address 0x00: 7f b0 02 ff 0b f0 01 09 52 45 56 20 30 39 00 00
  Address 0x10: 00 00 00 00 37 36 30 2d 30 35 34 33 37 32 00 00
  Address 0x20: 53 2f 4e 20 41 43 50 44 36 37 39 39 00 1c 09 07
  Address 0x30: e0 ff ff ff ff ff ff ff ff ff ff ff ff ff ff ff
  Address 0x40: ff ff ff ff 01 43 4d 55 43 41 48 59 43 41 41 51
  Address 0x50: 46 58 31 30 30 30 38 2d 46 41 4e 00 00 00 00 00
  Address 0x60: 00 00 00 00 00 00 41 00 00 ff ff ff ff ff ff ff
  Address 0x70: ff ff ff f1 ff ff ff ff ff ff ff ff ff ff ff ff
Fan Tray 1       REV 09   760-054372   ACNZ3584          Fan Tray 8
 Jedec Code:   0x7fb0            EEPROM Version:    0x02
 P/N:          760-054372        S/N:               ACNZ3584
 Assembly ID:  0x0bf0            Assembly Version:  01.09
 Date:         08-30-2016        Assembly Flags:    0x00
 Version:      REV 09            CLEI Code:         CMUCAHYCAA
 ID: Fan Tray 8                  FRU Model Number:  QFX10008-FAN
 Board Information Record:
  Address 0x00: ff ff ff ff ff ff ff ff ff ff ff ff ff ff ff ff
 I2C Hex Data:
  Address 0x00: 7f b0 02 ff 0b f0 01 09 52 45 56 20 30 39 00 00
  Address 0x10: 00 00 00 00 37 36 30 2d 30 35 34 33 37 32 00 00
  Address 0x20: 53 2f 4e 20 41 43 4e 5a 33 35 38 34 00 1e 08 07
  Address 0x30: e0 ff ff ff ff ff ff ff ff ff ff ff ff ff ff ff
  Address 0x40: ff ff ff ff 01 43 4d 55 43 41 48 59 43 41 41 51
  Address 0x50: 46 58 31 30 30 30 38 2d 46 41 4e 00 00 00 00 00
  Address 0x60: 00 00 00 00 00 00 41 00 00 ff ff ff ff ff ff ff
  Address 0x70: ff ff ff f1 ff ff ff ff ff ff ff ff ff ff ff ff
SFB 0            REV 24   750-050058   ACPD4587          Switch Fabric (SIB) 8
 Jedec Code:   0x7fb0            EEPROM Version:    0x02
 P/N:          750-050058        S/N:               ACPD4587
 Assembly ID:  0x0bec            Assembly Version:  01.24
 Date:         06-19-2016        Assembly Flags:    0x00
 Version:      REV 24            CLEI Code:         CMUCAH0CAA
```

```
 ID: Switch Fabric (SIB) 8       FRU Model Number:  QFX10008-SF
 Board Information Record:
  Address 0x00: ff ff ff ff ff ff ff ff ff ff ff ff ff ff ff ff
 I2C Hex Data:
  Address 0x00: 7f b0 02 ff 0b ec 01 18 52 45 56 20 32 34 00 00
  Address 0x10: 00 00 00 00 37 35 30 2d 30 35 30 30 35 38 00 00
  Address 0x20: 53 2f 4e 20 41 43 50 44 34 35 38 37 00 13 06 07
  Address 0x30: e0 ff ff ff ff ff ff ff ff ff ff ff ff ff ff ff
  Address 0x40: ff ff ff ff 01 43 4d 55 43 41 48 30 43 41 41 51
  Address 0x50: 46 58 31 30 30 30 38 2d 53 46 00 00 00 00 00 00
  Address 0x60: 00 00 00 00 00 00 41 45 00 ff ff ff ff ff ff ff
  Address 0x70: ff ff ff d1 00 00 00 00 00 00 00 00 00 00 00 00
SFB 1            REV 24   750-050058   ACNZ0635          Switch Fabric (SIB) 8
 Jedec Code:   0x7fb0            EEPROM Version:    0x02
 P/N:          750-050058        S/N:               ACNZ0635
 Assembly ID:  0x0bec            Assembly Version:  01.24
 Date:         06-06-2016        Assembly Flags:    0x00
 Version:      REV 24            CLEI Code:         CMUCAH0CAA
 ID: Switch Fabric (SIB) 8       FRU Model Number:  QFX10008-SF
 Board Information Record:
  Address 0x00: ff ff ff ff ff ff ff ff ff ff ff ff ff ff ff ff
 I2C Hex Data:
  Address 0x00: 7f b0 02 ff 0b ec 01 18 52 45 56 20 32 34 00 00
  Address 0x10: 00 00 00 00 37 35 30 2d 30 35 30 30 35 38 00 00
  Address 0x20: 53 2f 4e 20 41 43 4e 5a 30 36 33 35 00 06 06 07
  Address 0x30: e0 ff ff ff ff ff ff ff ff ff ff ff ff ff ff ff
  Address 0x40: ff ff ff ff 01 43 4d 55 43 41 48 30 43 41 41 51
  Address 0x50: 46 58 31 30 30 30 38 2d 53 46 00 00 00 00 00 00
  Address 0x60: 00 00 00 00 00 00 41 45 00 ff ff ff ff ff ff ff
  Address 0x70: ff ff ff d1 00 00 00 00 00 00 00 00 00 00 00 00
SFB 2            REV 24   750-050058   ACPD4908          Switch Fabric (SIB) 8
 Jedec Code:   0x7fb0            EEPROM Version:    0x02
 P/N:          750-050058        S/N:               ACPD4908
 Assembly ID:  0x0bec            Assembly Version:  01.24
 Date:         07-12-2016        Assembly Flags:    0x00
 Version:      REV 24            CLEI Code:         CMUCAH0CAA
 ID: Switch Fabric (SIB) 8       FRU Model Number:  QFX10008-SF
 Board Information Record:
  Address 0x00: ff ff ff ff ff ff ff ff ff ff ff ff ff ff ff ff
 I2C Hex Data:
  Address 0x00: 7f b0 02 ff 0b ec 01 18 52 45 56 20 32 34 00 00
  Address 0x10: 00 00 00 00 37 35 30 2d 30 35 30 30 35 38 00 00
  Address 0x20: 53 2f 4e 20 41 43 50 44 34 39 30 38 00 0c 07 07
  Address 0x30: e0 ff ff ff ff ff ff ff ff ff ff ff ff ff ff ff
  Address 0x40: ff ff ff ff 01 43 4d 55 43 41 48 30 43 41 41 51
  Address 0x50: 46 58 31 30 30 30 38 2d 53 46 00 00 00 00 00 00
  Address 0x60: 00 00 00 00 00 00 41 45 00 ff ff ff ff ff ff ff
  Address 0x70: ff ff ff d1 00 00 00 00 00 00 00 00 00 00 00 00
SFB 3            REV 24   750-050058   ACNZ0617          Switch Fabric (SIB) 8
 Jedec Code:   0x7fb0            EEPROM Version:    0x02
 P/N:          750-050058        S/N:               ACNZ0617
 Assembly ID:  0x0bec            Assembly Version:  01.24
 Date:         06-07-2016        Assembly Flags:    0x00
 Version:      REV 24            CLEI Code:         CMUCAH0CAA
 ID: Switch Fabric (SIB) 8       FRU Model Number:  QFX10008-SF
 Board Information Record:
  Address 0x00: ff ff ff ff ff ff ff ff ff ff ff ff ff ff ff ff
 I2C Hex Data:
  Address 0x00: 7f b0 02 ff 0b ec 01 18 52 45 56 20 32 34 00 00
  Address 0x10: 00 00 00 00 37 35 30 2d 30 35 30 30 35 38 00 00
  Address 0x20: 53 2f 4e 20 41 43 4e 5a 30 36 31 37 00 07 06 07
```

```
  Address 0x30: e0 ff ff ff ff ff ff ff ff ff ff ff ff ff ff ff
  Address 0x40: ff ff ff ff 01 43 4d 55 43 41 48 30 43 41 41 51
  Address 0x50: 46 58 31 30 30 30 38 2d 53 46 00 00 00 00 00 00
  Address 0x60: 00 00 00 00 00 00 41 45 00 ff ff ff ff ff ff ff
  Address 0x70: ff ff ff d1 00 00 00 00 00 00 00 00 00 00 00 00
SFB 4            REV 24   750-050058   ACNZ0527          Switch Fabric (SIB) 8
 Jedec Code:   0x7fb0            EEPROM Version:    0x02
 P/N:          750-050058        S/N:               ACNZ0527
 Assembly ID:  0x0bec            Assembly Version:  01.24
 Date:         06-06-2016        Assembly Flags:    0x00
 Version:      REV 24            CLEI Code:         CMUCAH0CAA
 ID: Switch Fabric (SIB) 8       FRU Model Number:  QFX10008-SF
 Board Information Record:
  Address 0x00: ff ff ff ff ff ff ff ff ff ff ff ff ff ff ff ff
 I2C Hex Data:
  Address 0x00: 7f b0 02 ff 0b ec 01 18 52 45 56 20 32 34 00 00
  Address 0x10: 00 00 00 00 37 35 30 2d 30 35 30 30 35 38 00 00
  Address 0x20: 53 2f 4e 20 41 43 4e 5a 30 35 32 37 00 06 06 07
  Address 0x30: e0 ff ff ff ff ff ff ff ff ff ff ff ff ff ff ff
  Address 0x40: ff ff ff ff 01 43 4d 55 43 41 48 30 43 41 41 51
  Address 0x50: 46 58 31 30 30 30 38 2d 53 46 00 00 00 00 00 00
  Address 0x60: 00 00 00 00 00 00 41 45 00 ff ff ff ff ff ff ff
  Address 0x70: ff ff ff d1 00 00 00 00 00 00 00 00 00 00 00 00
SFB 5            REV 23   750-050058   ACNX6980          Switch Fabric (SIB) 8
 Jedec Code:   0x7fb0            EEPROM Version:    0x02
 P/N:          750-050058        S/N:               ACNX6980
 Assembly ID:  0x0bec            Assembly Version:  01.23
 Date:         05-16-2016        Assembly Flags:    0x00
 Version:      REV 23            CLEI Code:         CMUCAH0CAA
 ID: Switch Fabric (SIB) 8       FRU Model Number:  QFX10008-SF
 Board Information Record:
  Address 0x00: ff ff ff ff ff ff ff ff ff ff ff ff ff ff ff ff
 I2C Hex Data:
  Address 0x00: 7f b0 02 ff 0b ec 01 17 52 45 56 20 32 33 00 00
  Address 0x10: 00 00 00 00 37 35 30 2d 30 35 30 30 35 38 00 00
  Address 0x20: 53 2f 4e 20 41 43 4e 58 36 39 38 30 00 10 05 07
  Address 0x30: e0 ff ff ff ff ff ff ff ff ff ff ff ff ff ff ff
  Address 0x40: ff ff ff ff 01 43 4d 55 43 41 48 30 43 41 41 51
  Address 0x50: 46 58 31 30 30 30 38 2d 53 46 00 00 00 00 00 00
  Address 0x60: 00 00 00 00 00 00 41 42 00 ff ff ff ff ff ff ff
  Address 0x70: ff ff ff ce 00 00 00 00 00 00 00 00 00 00 00 00
```

show chassis hardware models (MX10008 Router)

```
user@host> show chassis hardware models
Item             Version  Part number  Serial number     FRU model number
Midplane         REV 27   750-054097   ACPD4307          QFX10008-CHAS
CB 0             REV 02   750-079563   CAFF4580
CB 1             REV 04   750-079563   CAGL8034
FPC 0            REV 12   750-073174   CAJK0253          PROTO-ASSEMBLY
FPC 2            REV 03   750-073174   CAJB6004          PROTO-ASSEMBLY
FPC 3            REV 04   750-084779   CAKR7019          PROTO-ASSEMBLY
FPD Board        REV 07   711-054687   ACPC7142
PEM 0            REV 02   740-049388   1EDL62102N9       QFX10000-PWR-AC
PEM 1            REV 02   740-049388   1EDL60300KX       QFX10000-PWR-AC
PEM 2            REV 02   740-049388   1EDL60300DL       QFX10000-PWR-AC
PEM 3            REV 02   740-049388   1EDL61701BT       QFX10000-PWR-AC
PEM 4            REV 02   740-049388   1EDL62102P7       QFX10000-PWR-AC
PEM 5            REV 02   740-049388   1EDL62102PP       QFX10000-PWR-AC
FTC 0            REV 14   750-050108   ACPE4038          QFX10008-FAN-CTRL
FTC 1            REV 14   750-050108   ACPE4032          QFX10008-FAN-CTRL
```

```
Fan Tray 0       REV 09   760-054372   ACPD6799          QFX10008-FAN
Fan Tray 1       REV 09   760-054372   ACNZ3584          QFX10008-FAN
SFB 0            REV 24   750-050058   ACPD4587          QFX10008-SF
SFB 1            REV 24   750-050058   ACNZ0635          QFX10008-SF
SFB 2            REV 24   750-050058   ACPD4908          QFX10008-SF
SFB 3            REV 24   750-050058   ACNZ0617          QFX10008-SF
SFB 4            REV 24   750-050058   ACNZ0527          QFX10008-SF
SFB 5            REV 23   750-050058   ACNX6980          QFX10008-SF
```

show chassis hardware (PTX3000 Router with 5-port 100-Gigabit DWDM OTN PIC)

```
user@host> show chassis hardware
Hardware inventory:
Item             Version  Part number  Serial number     Description
Chassis                                JN123AC42AJC      PTX3000
Midplane         REV 22   750-044645   ACLP6640          Backplane
FPM              REV 07   760-044663   ACMX2146          Front Panel Display
PSM 1            REV 02   740-044980   1EDD3080169       DC 12V Power Supply
PSM 2            REV 06   740-044981   1EDK5040563       AC 12V Power Supply
PSM 3            REV 06   740-044981   1EDK5040313       AC 12V Power Supply
PSM 4            REV 04   740-044980   1EDJ3330088       DC 12V Power Supply
Routing Engine 0 REV 12   740-026942   P737A-006029      RE-DUO-2600
CB 0             REV 18   750-044656   ACMZ3179          Control Board
FPC 2            REV 06   750-057064   ACAM6098          FPC3-SFF-PTX-1X
  CPU                     BUILTIN      BUILTIN           SMPC PMB
  PIC 0          REV 17   750-059747   ACNW3510          5X100GE DWDM CFP2-ACO
    Xcvr 0       REV 01   740-062357   1DJBZ040003       OTN-100G-LH
    Xcvr 2       REV 01   740-062357   1DJBZ044004       OTN-100G-LH
    Xcvr 3       REV 01   740-062357   1DJBZ03500P       OTN-100G-LH
    Xcvr 4       REV 01   740-062357   1DJBZ03700C       OTN-100G-LH
FPC 4            REV 12   750-057064   ACAM7153          FPC3-SFF-PTX-1X
  CPU                     BUILTIN      BUILTIN           SMPC PMB
  PIC 0          REV 17   750-059747   ACNW3511          5X100GE DWDM CFP2-ACO
    Xcvr 0       REV 01   740-061663   47                OTN-100G-LH
    Xcvr 1       REV 01   740-061663   39                OTN-100G-LH
    Xcvr 2       REV 01   740-062357   1DJBZ044002       OTN-100G-LH
    Xcvr 3       REV 01   740-062357   1DJBZ03700G       OTN-100G-LH
    Xcvr 4       REV 01   740-062357   1DJBZ041001       OTN-100G-LH
FPC 8            REV 11   750-057064   ACAM6808          FPC3-SFF-PTX-1X
  CPU                     BUILTIN      BUILTIN           SMPC PMB
  PIC 0          REV 17   750-059747   ACNW3508          5X100GE DWDM CFP2-ACO
    Xcvr 0       REV 01   740-061663   194               OTN-100G-LH
    Xcvr 1       REV 01   740-061663   168               OTN-100G-LH
    Xcvr 2       REV 01   740-061663   52                OTN-100G-LH
    Xcvr 3       REV 01   740-061663   85                OTN-100G-LH
    Xcvr 4       REV 01   740-061663   218               OTN-100G-LH
SIB 0            REV 03   750-057067   ACAM8513          SIB3-SFF-PTX
SIB 1            REV 01   750-057067   ACAM5918          SIB3-SFF-PTX
SIB 2            REV 01   711-057066   ACAM4325          SIB3-SFF-PTX
SIB 3            REV 01   711-057066   ACAM4328          SIB3-SFF-PTX
SIB 4            REV 01   711-057066   ACAM4349          SIB3-SFF-PTX
SIB 5            REV 01   711-057066   ACAM4323          SIB3-SFF-PTX
SIB 6            REV 01   711-057066   ACAM4344          SIB3-SFF-PTX
SIB 7            REV 01   750-057067   ACAM4346          SIB3-SFF-PTX
SIB 8            REV 01   750-057067   ACAM5911          SIB3-SFF-PTX
Fan Tray 0       REV 13   760-044659   ACMP6395          Fan Tray (Exhaust)
Fan Tray 1       REV 13   760-044659   ACMZ6957          Fan Tray (Exhaust)
```

show chassis hardware clei-models (PTX3000 Router with 5-port 100-Gigabit DWDM OTN PIC)

```
user@host> show chassis hardware clei-models
Hardware inventory:
Item             Version  Part number  CLEI code         FRU model number
Midplane         REV 22   750-044645   IPMVN10FRA        CHAS-MP-PTX3000-S
FPM              REV 07   760-044663   IPUCBE5CAA        FPD-SFF-PTX-S
PSM 1            REV 02   740-044980   PROTOPWRDC        PSM-SFF-PTX-DC-2200-S
PSM 2            REV 06   740-044981   IPUPAK0KAB        PSM-SFF-PTX-AC-S
PSM 3            REV 06   740-044981   IPUPAK0KAB        PSM-SFF-PTX-AC-S
PSM 4            REV 04   740-044980   IPUPAK1KAA        PSM-SFF-PTX-DC-S
Routing Engine 0 REV 12   740-026942                     RE-DUO-C2600-16G-S
CB 0             REV 18   750-044656   IPUCBE6CAB        CB-SFF-PTX-S
FPC 2            REV 06   750-057064   PROTOXCLEI        PROTO-ASSEMBLY
  PIC 0          REV 17   750-059747   IPU3BC5HAA        PTX-5-100G-WDM
FPC 4            REV 12   750-057064
  PIC 0          REV 17   750-059747   IPU3BC5HAA        PTX-5-100G-WDM
FPC 8            REV 11   750-057064
  PIC 0          REV 17   750-059747   IPU3BC5HAA        PTX-5-100G-WDM
SIB 0            REV 03   750-057067   PROTOXCLEI        PROTO-ASSEMBLY
SIB 1            REV 01   750-057067   PROTOXCLEI        PROTO-ASSEMBLY
SIB 2            REV 01   711-057066   PROTOXCLEI        PROTO-ASSEMBLY
SIB 3            REV 01   711-057066   PROTOXCLEI        PROTO-ASSEMBLY
SIB 4            REV 01   711-057066   PROTOXCLEI        PROTO-ASSEMBLY
SIB 5            REV 01   711-057066   PROTOXCLEI        PROTO-ASSEMBLY
SIB 6            REV 01   711-057066   PROTOXCLEI        PROTO-ASSEMBLY
SIB 7            REV 01   750-057067   PROTOXCLEI        PROTO-ASSEMBLY
SIB 8            REV 01   750-057067   PROTOXCLEI        PROTO-ASSEMBLY
Fan Tray 0       REV 13   760-044659   IPUCBE8CAA        FAN-SFF-PTX-S
Fan Tray 1       REV 13   760-044659   IPUCBE8CAA        FAN-SFF-PTX-S
```

show chassis hardware (MX2010 Router)

```
user@host > show chassis hardware
Hardware inventory:
Item             Version  Part number  Serial number     Description
Chassis                               JN11E3217AFK      MX2010
Midplane         REV 01   750-044636   ABAB8506          Lower Backplane
Midplane 1       REV 01   711-044557   ZY8296            Upper Backplane
PMP              REV 03   711-032426   ACAJ1388          Power Midplane
FPM Board        REV 06   711-032349   ZX8744            Front Panel Display
PSM 4            REV 0C   740-033727   VK00254           DC 52V Power Supply
Module
PSM 5            REV 0B   740-033727   VG00015           DC 52V Power Supply
Module
PSM 6            REV 0B   740-033727   VH00097           DC 52V Power Supply
Module
PSM 7            REV 0C   740-033727   VJ00151           DC 52V Power Supply
Module
PSM 8            REV 0C   740-033727   VJ00149           DC 52V Power Supply
Module
PDM 0            REV 0B   740-038109   WA00008           DC Power Dist Module
PDM 1            REV 0B   740-038109   WA00014           DC Power Dist Module
Routing Engine 0 REV 02   740-041821   9009094134        RE-S-1800x4
Routing Engine 1 REV 02   740-041821   9009094141        RE-S-1800x4
CB 0             REV 08   750-040257   CAAB3491          Control Board
CB 1             REV 08   750-040257   CAAB3489          Control Board
SPMB 0           REV 02   711-041855   CAAA6135          PMB Board
SPMB 1           REV 02   711-041855   CAAA6137          PMB Board
SFB 0            REV 06   711-032385   ZV1828            Switch Fabric Board
```

```
SFB 1            REV 07   711-032385   ZZ2568           Switch Fabric Board
SFB 2            REV 07   711-032385   ZZ2563           Switch Fabric Board
SFB 3            REV 07   711-032385   ZZ2564           Switch Fabric Board
SFB 4            REV 07   711-032385   ZZ2580           Switch Fabric Board
SFB 5            REV 07   711-032385   ZZ2579           Switch Fabric Board
SFB 6            REV 07   711-032385   CAAB4882         Switch Fabric Board
SFB 7            REV 07   711-032385   CAAB4898         Switch Fabric Board
FPC 0            REV 33   750-028467   CAAB1919         MPC 3D 16x 10GE
  CPU            REV 11   711-029089   CAAB7174         AMPC PMB
  PIC 0                   BUILTIN      BUILTIN          4x 10GE(LAN) SFP+
    Xcvr 0       REV 01   740-021308   AMH02RE          SFP+-10G-SR
    Xcvr 1       REV 01   740-021308   AMH038C          SFP+-10G-SR
    Xcvr 2       REV 01   740-021308   AMH0390          SFP+-10G-SR
    Xcvr 3       REV 01   740-021308   AMG0SUA          SFP+-10G-SR
  PIC 1                   BUILTIN      BUILTIN          4x 10GE(LAN) SFP+
    Xcvr 0       REV 01   740-021308   AMH0579          SFP+-10G-SR
    Xcvr 1       REV 01   740-021308   AMG0SGP          SFP+-10G-SR
    Xcvr 2       REV 01   740-021308   AMH04SV          SFP+-10G-SR
    Xcvr 3       REV 01   740-021308   AMH04X3          SFP+-10G-SR
  PIC 2                   BUILTIN      BUILTIN          4x 10GE(LAN) SFP+
    Xcvr 0       REV 01   740-021308   AMH0135          SFP+-10G-SR
    Xcvr 1       REV 01   740-021308   AMH02NC          SFP+-10G-SR
    Xcvr 2       REV 01   740-021308   AMH02XB          SFP+-10G-SR
    Xcvr 3       REV 01   740-021308   AMH02PN          SFP+-10G-SR
  PIC 3                   BUILTIN      BUILTIN          4x 10GE(LAN) SFP+
    Xcvr 0       REV 01   740-021308   AMH057Y          SFP+-10G-SR
    Xcvr 1       REV 01   740-021308   AMG0JHE          SFP+-10G-SR
    Xcvr 2       REV 01   740-021308   AMH02HT          SFP+-10G-SR
    Xcvr 3       REV 01   740-021308   AMH04V4          SFP+-10G-SR
FPC 1            REV 21   750-033205   ZG5027           MPC Type 3
  CPU            REV 04   711-035209   YT4780           HMPC PMB 2G
  MIC 0          REV 03   750-033307   ZV6299           10X10GE SFPP
    PIC 0                 BUILTIN      BUILTIN          10X10GE SFPP
      Xcvr 0     REV 01   740-031980   083363A00410     SFP+-10G-SR
      Xcvr 1     REV 01   740-031980   083363A00334     SFP+-10G-SR
      Xcvr 2     REV 01   740-031980   113363A00125     SFP+-10G-SR
      Xcvr 3     REV 01   740-031980   083363A00953     SFP+-10G-SR
      Xcvr 4     REV 01   740-031980   AHR013D          SFP+-10G-SR
      Xcvr 5     REV 01   740-031980   AJ40JUR          SFP+-10G-SR
      Xcvr 6     REV 01   740-031980   AJ40JKL          SFP+-10G-SR
      Xcvr 7     REV 01   740-031980   AJ30ECK          SFP+-10G-SR
      Xcvr 8     REV 01   740-021308   19T511100864     SFP+-10G-SR
      Xcvr 9     REV 01   740-021308   19T511100868     SFP+-10G-SR
  MIC 1          REV 03   750-033307   ZV6268           10X10GE SFPP
    PIC 2                 BUILTIN      BUILTIN          10X10GE SFPP
      Xcvr 0     REV 01   740-031980   AJC0JML          SFP+-10G-SR
      Xcvr 1     REV 01   740-031980   AJ403PC          SFP+-10G-SR
      Xcvr 2     REV 01   740-031980   AJ10N25          SFP+-10G-SR
      Xcvr 3     REV 01   740-031980   AJ40JF4          SFP+-10G-SR
      Xcvr 4     REV 01   740-031980   AJ40JSJ          SFP+-10G-SR
      Xcvr 5     REV 01   740-031980   AJ403V7          SFP+-10G-SR
      Xcvr 6     REV 01   740-031980   AJ40JN3          SFP+-10G-SR
      Xcvr 7     REV 01   740-031980   AJ40JSU          SFP+-10G-SR
      Xcvr 8     REV 01   740-021308   19T511100468     SFP+-10G-SR
      Xcvr 9     REV 01   740-021308   19T511101363     SFP+-10G-SR
FPC 8            REV 22   750-031089   ZT9746           MPC Type 2 3D
  CPU            REV 06   711-030884   ZS1271           MPC PMB 2G
  MIC 0          REV 26   750-028392   ABBS1150         3D 20x 1GE(LAN) SFP
    PIC 0                 BUILTIN      BUILTIN          10x 1GE(LAN) SFP
      Xcvr 0     REV 01   740-031851   PLG023C          SFP-SX
      Xcvr 1     REV 01   740-031851   PLG09C6          SFP-SX
```

```
      Xcvr 2     REV 02   740-011613   AM0950SF9L7       SFP-SX
      Xcvr 3     REV 02   740-011613   AM1001SFN1H       SFP-SX
      Xcvr 4     REV 02   740-011613   AM1001SFM9D       SFP-SX
      Xcvr 5     REV 02   740-011613   AM1001SFLTJ       SFP-SX
      Xcvr 6     REV 01   740-031851   AC1108S03L9       SFP-SX
      Xcvr 7     REV 01   740-031851   AC1102S00NC       SFP-SX
      Xcvr 8     REV 01   740-031851   AC1102S00MX       SFP-SX
      Xcvr 9     REV 01   740-031851   AC1102S0085       SFP-SX
    PIC 1                 BUILTIN      BUILTIN           10x 1GE(LAN) SFP
      Xcvr 0     REV 01   740-031851   AC1102S00KU       SFP-SX
      Xcvr 1     REV 01   740-031851   AC1102S00NG       SFP-SX
      Xcvr 2     REV 01   740-031851   AC1102S00K3       SFP-SX
      Xcvr 3     REV 01   740-031851   AC1102S008R       SFP-SX
      Xcvr 4     REV 01   740-031851   AM1107SUFVJ       SFP-SX
      Xcvr 5     REV 01   740-031851   AC1108S03LG       SFP-SX
  MIC 1          REV 26   750-028387   ABBR9582          3D 4x 10GE  XFP
    PIC 2                 BUILTIN      BUILTIN           2x 10GE  XFP
      Xcvr 0               NON-JNPR     T10A91703         XFP-10G-SR
      Xcvr 1               NON-JNPR     T09L42604         XFP-10G-SR
    PIC 3                 BUILTIN      BUILTIN           2x 10GE  XFP
FPC 9            REV 11   750-036284   ZL3591            MPC 3D 16x 10GE EM
  CPU            REV 10   711-029089   ZL0513            AMPC PMB
  PIC 0                   BUILTIN      BUILTIN           4x 10GE(LAN) SFP+
    Xcvr 0       REV 01   740-031980   1YT517101825      SFP+-10G-SR
    Xcvr 1       REV 01   740-031980   1YT517101821      SFP+-10G-SR
    Xcvr 2       REV 01   740-031980   1YT517101682      SFP+-10G-SR
    Xcvr 3       REV 01   740-031980   ALQ13R6           SFP+-10G-SR
  PIC 1                   BUILTIN      BUILTIN           4x 10GE(LAN) SFP+
    Xcvr 0       REV 01   740-031980   1YT517101828      SFP+-10G-SR
    Xcvr 1       REV 01   740-031980   1YT517101716      SFP+-10G-SR
    Xcvr 2       REV 01   740-031980   1YT517101732      SFP+-10G-SR
    Xcvr 3       REV 01   740-031980   ALP0TR1           SFP+-10G-SR
  PIC 2                   BUILTIN      BUILTIN           4x 10GE(LAN) SFP+
    Xcvr 0       REV 01   740-031980   1YT517101741      SFP+-10G-SR
    Xcvr 1       REV 01   740-031980   1YT517101829      SFP+-10G-SR
    Xcvr 2       REV 01   740-031980   1YT517101669      SFP+-10G-SR
    Xcvr 3       REV 01   740-031980   ALQ14E3           SFP+-10G-SR
  PIC 3                   BUILTIN      BUILTIN           4x 10GE(LAN) SFP+
    Xcvr 0       REV 01   740-031980   1YT517101826      SFP+-10G-SR
    Xcvr 1       REV 01   740-031980   1YT517101817      SFP+-10G-SR
    Xcvr 2       REV 01   740-031980   1YT517101735      SFP+-10G-SR
    Xcvr 3       REV 01   740-031980   ALQ159A           SFP+-10G-SR
ADC 0            REV 05   750-043596   CAAC2073          Adapter Card
ADC 1            REV 01   750-043596   ZV4117            Adapter Card
ADC 8            REV 01   750-043596   ZV4107            Adapter Card
ADC 9            REV 02   750-043596   ZW1555            Adapter Card
Fan Tray 0       REV 2A   760-046960   ACAY0015          172mm FanTray - 6 Fans
Fan Tray 1       REV 2A   760-046960   ACAY0019          172mm FanTray - 6 Fans
Fan Tray 2       REV 2A   760-046960   ACAY0020          172mm FanTray - 6 Fans
Fan Tray 3       REV 2A   760-046960   ACAY0021          172mm FanTray - 6 Fans
```

show chassis hardware detail (MX2010 Router)

```
user@host > show chassis hardware detail
Hardware inventory:
Item             Version  Part number  Serial number     Description
Chassis                                JN11E233DAFK      MX2010
Midplane         REV 26   750-044636   ABAB9357          Lower Backplane
Midplane 1       REV 01   711-044557   ABAB8643          Upper Backplane
PMP              REV 04   711-032426   ACAJ1677          Power Midplane
FPM Board        REV 08   760-044634   ABBV9726          Front Panel Display
```

```
PSM 0            REV 01   740-045050   1E02224000P       DC 52V Power Supply
Module
PSM 1            REV 01   740-045050   1E02224000M       DC 52V Power Supply
Module
PSM 2            REV 01   740-045050   1E022240010       DC 52V Power Supply
Module
PSM 3            REV 01   740-045050   1E02224000G       DC 52V Power Supply
Module
PSM 4            REV 01   740-045050   1E022240013       DC 52V Power Supply
Module
PSM 5            REV 01   740-045050   1E022240007       DC 52V Power Supply
Module
PSM 6            REV 01   740-045050   1E02224001C       DC 52V Power Supply
Module
PSM 7            REV 01   740-045050   1E02224001D       DC 52V Power Supply
Module
PSM 8            REV 01   740-045050   1E02224001B       DC 52V Power Supply
Module
PDM 0            REV 01   740-045234   1E262250067       DC Power Dist Module
Routing Engine 0 REV 02   740-041821   9009099704        RE-S-1800x4
  ad0    3831 MB  UGB30SFA4000T1       SFA4000T1 00000651 Compact Flash
  ad1   30533 MB  UGB94BPH32H0S1-KCI   11000019592       Disk 1
  usb0 (addr 1)  EHCI root hub 0       Intel             uhub0
  usb0 (addr 2)  product 0x0020 32     vendor 0x8087     uhub1
  DIMM 0         SGU04G72H1BD2SA-BB DIE REV-52 PCB REV-54 MFR ID-ce80
  DIMM 1         SGU04G72H1BD2SA-BB DIE REV-52 PCB REV-54 MFR ID-ce80
  DIMM 2         SGU04G72H1BD2SA-BB DIE REV-52 PCB REV-54 MFR ID-ce80
  DIMM 3         SGU04G72H1BD2SA-BB DIE REV-52 PCB REV-54 MFR ID-ce80
Routing Engine 1 REV 02   740-041821   9009099706        RE-S-1800x4
  ad0    3998 MB  Virtium - TuffDrive VCF P1T0200262860208 114 Compact Flash
  ad1   30533 MB  UGB94ARF32H0S3-KC    UNIGEN-499551-000404 Disk 1
CB 0             REV 13   750-040257   CAAF8436          Control Board
CB 1             REV 13   750-040257   CAAF8434          Control Board
SPMB 0           REV 02   711-041855   ABBV3825          PMB Board
SPMB 1           REV 02   711-041855   ABBV3833          PMB Board
SFB 0            REV 05   711-044466   ABBX5682          Switch Fabric Board
SFB 1            REV 05   711-044466   ABBX5676          Switch Fabric Board
SFB 2            REV 05   711-044466   ABBX5665          Switch Fabric Board
SFB 3            REV 05   711-044466   ABBX5699          Switch Fabric Board
SFB 4            REV 05   711-044466   ABBX5603          Switch Fabric Board
SFB 5            REV 05   711-044466   ABBX5587          Switch Fabric Board
SFB 6            REV 05   711-044466   ABBX5607          Switch Fabric Board
SFB 7            REV 05   711-044466   ABBX5669          Switch Fabric Board
FPC 0            REV 09   750-037355   CAAF0924          MPC Type 4-2
  CPU            REV 08   711-035209   CAAB9842          HMPC PMB 2G
  PIC 0                   BUILTIN      BUILTIN           4x10GE SFPP
    Xcvr 0       REV 01   740-021308   19T511101656      SFP+-10G-SR
    Xcvr 1       REV 01   740-031980   AMA04RU           SFP+-10G-SR
    Xcvr 2       REV 01   740-031980   193363A00558      SFP+-10G-SR
    Xcvr 3       REV 01   740-031980   B10M00202         SFP+-10G-SR
  PIC 1                   BUILTIN      BUILTIN           1X100GE CFP
    Xcvr 0                NON-JNPR     X12J00328         CFP-100G-SR10
  PIC 2                   BUILTIN      BUILTIN           4x10GE SFPP
    Xcvr 0       REV 01   740-031980   AMA088W           SFP+-10G-SR
    Xcvr 1       REV 01   740-031980   B10L04211         SFP+-10G-SR
    Xcvr 2       REV 01   740-021308   19T511101602      SFP+-10G-SR
    Xcvr 3       REV 01   740-031980   B10L04151         SFP+-10G-SR
  PIC 3                   BUILTIN      BUILTIN           1X100GE CFP
Xcvr 0                NON-JNPR     X12J00332         CFP-100G-SR10
FPC 1            REV 18   750-033205   ZE0128            MPC Type 3
  CPU            REV 06   711-035209   ZG5431            HMPC PMB 2G
```

```
  MIC 0          REV 15   750-033199   ZP6435           1X100GE CFP
    PIC 0                 BUILTIN      BUILTIN          1X100GE CFP
      Xcvr 0     REV 01   740-032210   J11E46118        CFP-100G-LR4
  MIC 1          REV 15   750-033199   ZP6442           1X100GE CFP
    PIC 2                 BUILTIN      BUILTIN          1X100GE CFP
      Xcvr 0     REV 01   740-032210   UMN03T4          CFP-100G-LR4
FPC 2            REV 16   750-037358   CAAL1001         MPC Type 4-1
  CPU            REV 08   711-035209   CAAK7927         HMPC PMB 2G
  PIC 0                   BUILTIN      BUILTIN          8X10GE SFPP
    Xcvr 0       REV 01   740-031980   193363A00589     SFP+-10G-SR
    Xcvr 1       REV 01   740-021308   973152A00028     SFP+-10G-SR
    Xcvr 2       REV 01   740-031980   193363A00376     SFP+-10G-SR
    Xcvr 3       REV 01   740-021308   973152A00016     SFP+-10G-SR
    Xcvr 4       REV 01   740-031980   193363A00499     SFP+-10G-SR
    Xcvr 5       REV 01   740-021308   973152A00039     SFP+-10G-SR
    Xcvr 6       REV 01   740-031980   B11E01239        SFP+-10G-SR
    Xcvr 7       REV 01   740-021308   973152A00058     SFP+-10G-SR
  PIC 1                   BUILTIN      BUILTIN          8X10GE SFPP
    Xcvr 0       REV 01   740-031980   B10M00075        SFP+-10G-SR
    Xcvr 1       REV 01   740-021308   973152A00014     SFP+-10G-SR
    Xcvr 2       REV 01   740-031980   AMA0638          SFP+-10G-SR
    Xcvr 3       REV 01   740-021308   973152A00063     SFP+-10G-SR
    Xcvr 4       REV 01   740-031980   AMA0629          SFP+-10G-SR
    Xcvr 5       REV 01   740-021308   973152A00053     SFP+-10G-SR
    Xcvr 6       REV 01   740-031980   193363A00344     SFP+-10G-SR
    Xcvr 7       REV 01   740-021308   973152A00046     SFP+-10G-SR
  PIC 2                   BUILTIN      BUILTIN          8X10GE SFPP
    Xcvr 0       REV 01   740-031980   AMA062M          SFP+-10G-SR
    Xcvr 1       REV 01   740-021308   973152A00080     SFP+-10G-SR
    Xcvr 2       REV 01   740-031980   193363A00580     SFP+-10G-SR
    Xcvr 3       REV 01   740-021308   973152A00064     SFP+-10G-SR
    Xcvr 4       REV 01   740-031980   093363A01494     SFP+-10G-SR
    Xcvr 5       REV 01   740-021308   973152A00020     SFP+-10G-SR
    Xcvr 6       REV 01   740-031980   123363A00047     SFP+-10G-SR
    Xcvr 7       REV 01   740-021308   973152A00072     SFP+-10G-SR
  PIC 3                   BUILTIN      BUILTIN          8X10GE SFPP
    Xcvr 0       REV 01   740-021308   03DZ06A01033     SFP+-10G-SR
    Xcvr 1       REV 01   740-021308   973152A00022     SFP+-10G-SR
    Xcvr 2       REV 01   740-021308   03DZ06A01026     SFP+-10G-SR
    Xcvr 3       REV 01   740-021308   973152A00013     SFP+-10G-SR
    Xcvr 4       REV 01   740-021308   03DZ06A01028     SFP+-10G-SR
    Xcvr 5       REV 01   740-021308   973152A00079     SFP+-10G-SR
    Xcvr 6       REV 01   740-021308   03DZ06A01018     SFP+-10G-SR
    Xcvr 7       REV 01   740-021308   973152A00025     SFP+-10G-SR
FPC 3            REV 33   750-028467   CAAF5400         MPC 3D 16x 10GE
  CPU            REV 11   711-029089   CAAH7626         AMPC PMB
  PIC 0                   BUILTIN      BUILTIN          4x 10GE(LAN) SFP+
    Xcvr 0       REV 01   740-021308   973152A00066     SFP+-10G-SR
    Xcvr 1       REV 01   740-021308   973152A00021     SFP+-10G-SR
    Xcvr 2       REV 01   740-021308   973152A00062     SFP+-10G-SR
    Xcvr 3       REV 01   740-021308   973152A00027     SFP+-10G-SR
  PIC 1                   BUILTIN      BUILTIN          4x 10GE(LAN) SFP+
    Xcvr 0       REV 01   740-021308   973152A00065     SFP+-10G-SR
 Xcvr 1       REV 01   740-021308   973152A00069      SFP+-10G-SR
    Xcvr 2       REV 01   740-021308   973152A00026     SFP+-10G-SR
    Xcvr 3       REV 01   740-021308   973152A00003     SFP+-10G-SR
  PIC 2                   BUILTIN      BUILTIN          4x 10GE(LAN) SFP+
    Xcvr 0       REV 01   740-021308   973152A00035     SFP+-10G-SR
    Xcvr 1       REV 01   740-021308   973152A00004     SFP+-10G-SR
    Xcvr 2       REV 01   740-021308   973152A00049     SFP+-10G-SR
    Xcvr 3       REV 01   740-021308   973152A00055     SFP+-10G-SR
```

```
  PIC 3                   BUILTIN      BUILTIN           4x 10GE(LAN) SFP+
    Xcvr 0       REV 01   740-021308   973152A00010      SFP+-10G-SR
    Xcvr 1       REV 01   740-021308   973152A00001      SFP+-10G-SR
    Xcvr 2       REV 01   740-021308   973152A00073      SFP+-10G-SR
    Xcvr 3       REV 01   740-021308   973152A00012      SFP+-10G-SR
FPC 4            REV 21   750-033205   ZG5028            MPC Type 3
  CPU            REV 05   711-035209   YX3911            HMPC PMB 2G
  MIC 0          REV 03   750-036233   ZL2036            2X40GE QSFP
    PIC 0                 BUILTIN      BUILTIN           2X40GE QSFP
      Xcvr 0     REV 01   740-032986   QB220708          QSFP+-40G-SR4
      Xcvr 1     REV 01   740-032986   QB220735          QSFP+-40G-SR4
  MIC 1          REV 03   750-036233   ZL2028            2X40GE QSFP
    PIC 2                 BUILTIN      BUILTIN           2X40GE QSFP
      Xcvr 0     REV 01   740-032986   QB220727          QSFP+-40G-SR4
      Xcvr 1     REV 01   740-032986   QB220715          QSFP+-40G-SR4
FPC 5            REV 11   750-037358   CAAE2196          MPC Type 4-1
  CPU            REV 08   711-035209   CAAD9074          HMPC PMB 2G
  PIC 0                   BUILTIN      BUILTIN           8X10GE SFPP
    Xcvr 0       REV 01   740-031980   AMA062S           SFP+-10G-SR
    Xcvr 1       REV 01   740-031980   AMA062P           SFP+-10G-SR
    Xcvr 2       REV 01   740-031980   AMA052R           SFP+-10G-SR
    Xcvr 3       REV 01   740-031980   AMA0632           SFP+-10G-SR
    Xcvr 4       REV 01   740-031980   193363A00564      SFP+-10G-SR
    Xcvr 5       REV 01   740-031980   193363A00229      SFP+-10G-SR
    Xcvr 6       REV 01   740-031980   193363A00363      SFP+-10G-SR
    Xcvr 7       REV 01   740-031980   193363A00278      SFP+-10G-SR
  PIC 1                   BUILTIN      BUILTIN           8X10GE SFPP
    Xcvr 0       REV 01   740-031980   AMA04CC           SFP+-10G-SR
    Xcvr 1       REV 01   740-021308   AD0927A001W       SFP+-10G-SR
    Xcvr 2       REV 01   740-031980   AMA04N2           SFP+-10G-SR
    Xcvr 3       REV 01   740-031980   AMA062U           SFP+-10G-SR
    Xcvr 4       REV 01   740-031980   193363A00491      SFP+-10G-SR
    Xcvr 5       REV 01   740-031980   183363A01511      SFP+-10G-SR
    Xcvr 6       REV 01   740-031980   193363A00565      SFP+-10G-SR
    Xcvr 7       REV 01   740-031980   193363A00405      SFP+-10G-SR
  PIC 2                   BUILTIN      BUILTIN           8X10GE SFPP
    Xcvr 0       REV 01   740-031980   AMA07QX           SFP+-10G-SR
    Xcvr 1       REV 01   740-031980   AMA06MS           SFP+-10G-SR
    Xcvr 2       REV 01   740-031980   193363A00318      SFP+-10G-SR
    Xcvr 3       REV 01   740-031980   193363A00402      SFP+-10G-SR
    Xcvr 4       REV 01   740-031980   193363A00174      SFP+-10G-SR
    Xcvr 5       REV 01   740-031980   193363A00388      SFP+-10G-SR
    Xcvr 6       REV 01   740-031980   193363A00377      SFP+-10G-SR
    Xcvr 7       REV 01   740-031980   193363A00234      SFP+-10G-SR
  PIC 3                   BUILTIN      BUILTIN           8X10GE SFPP
    Xcvr 0       REV 01   740-031980   AMA062T           SFP+-10G-SR
    Xcvr 1       REV 01   740-031980   193363A00550      SFP+-10G-SR
    Xcvr 2       REV 01   740-031980   193363A00364      SFP+-10G-SR
Xcvr 3       REV 01   740-031980   AMA0630           SFP+-10G-SR
    Xcvr 4       REV 01   740-031980   193363A00509      SFP+-10G-SR
    Xcvr 5       REV 01   740-031980   193363A00459      SFP+-10G-SR
    Xcvr 6       REV 01   740-031980   113363A00191      SFP+-10G-SR
    Xcvr 7       REV 01   740-031980   193363A00352      SFP+-10G-SR
FPC 6            REV 33   750-028467   CAAF5552          MPC 3D 16x 10GE
  CPU            REV 11   711-029089   CAAH7601          AMPC PMB
  PIC 0                   BUILTIN      BUILTIN           4x 10GE(LAN) SFP+
    Xcvr 0       REV 01   740-021308   AD0927A0036       SFP+-10G-SR
    Xcvr 1       REV 01   740-021308   AD0927A003M       SFP+-10G-SR
    Xcvr 2       REV 01   740-021308   AD0927A003G       SFP+-10G-SR
    Xcvr 3       REV 01   740-021308   AD0927A0031       SFP+-10G-SR
  PIC 1                   BUILTIN      BUILTIN           4x 10GE(LAN) SFP+
```

```
    Xcvr 0       REV 01   740-031980   193363A00331      SFP+-10G-SR
    Xcvr 1       REV 01   740-031980   193363A00325      SFP+-10G-SR
    Xcvr 2       REV 01   740-031980   193363A00417      SFP+-10G-SR
    Xcvr 3       REV 01   740-031980   183363A02509      SFP+-10G-SR
  PIC 2                   BUILTIN      BUILTIN           4x 10GE(LAN) SFP+
    Xcvr 0       REV 01   740-021308   T09K75140         SFP+-10G-SR
    Xcvr 1       REV 01   740-031980   B11A04356         SFP+-10G-SR
    Xcvr 2       REV 01   740-031980   B11K01952         SFP+-10G-SR
    Xcvr 3       REV 01   740-031980   B11K01914         SFP+-10G-SR
  PIC 3                   BUILTIN      BUILTIN           4x 10GE(LAN) SFP+
    Xcvr 0       REV 01   740-021308   T09K75157         SFP+-10G-SR
    Xcvr 1       REV 01   740-021308   T09K75194         SFP+-10G-SR
    Xcvr 2       REV 01   740-031980   B11K01926         SFP+-10G-SR
    Xcvr 3       REV 01   740-031980   B11K01936         SFP+-10G-SR
FPC 7            REV 16   750-037358   CAAL1012          MPC Type 4-1
  CPU            REV 08   711-035209   CAAJ3851          HMPC PMB 2G
  PIC 0                   BUILTIN      BUILTIN           8X10GE SFPP
    Xcvr 0       REV 01   740-031980   AMA04NK           SFP+-10G-SR
    Xcvr 1       REV 01   740-031980   B11F00260         SFP+-10G-SR
    Xcvr 2       REV 01   740-031980   B11E02192         SFP+-10G-SR
    Xcvr 3       REV 01   740-031980   AMA04CP           SFP+-10G-SR
    Xcvr 4       REV 01   740-031980   AJ40JKK           SFP+-10G-SR
    Xcvr 5       REV 01   740-031980   B11F00238         SFP+-10G-SR
    Xcvr 6       REV 01   740-031980   B10M00275         SFP+-10G-SR
    Xcvr 7       REV 01   740-031980   193363A00211      SFP+-10G-SR
  PIC 1                   BUILTIN      BUILTIN           8X10GE SFPP
    Xcvr 0       REV 01   740-031980   B11D05577         SFP+-10G-SR
    Xcvr 1       REV 01   740-031980   B11G00586         SFP+-10G-SR
    Xcvr 2       REV 01   740-031980   AMA08B7           SFP+-10G-SR
    Xcvr 3       REV 01   740-031980   AMA04Q0           SFP+-10G-SR
    Xcvr 4       REV 01   740-031980   B11D05840         SFP+-10G-SR
    Xcvr 5       REV 01   740-031980   B11E00467         SFP+-10G-SR
    Xcvr 6       REV 01   740-031980   B11E00029         SFP+-10G-SR
    Xcvr 7       REV 01   740-021308   19T511101712      SFP+-10G-SR
  PIC 2                   BUILTIN      BUILTIN           8X10GE SFPP
    Xcvr 0       REV 01   740-031980   193363A00568      SFP+-10G-SR
    Xcvr 1       REV 01   740-031980   B10M00166         SFP+-10G-SR
    Xcvr 2       REV 01   740-031980   B10M00212         SFP+-10G-SR
    Xcvr 3       REV 01   740-031980   B11D05823         SFP+-10G-SR
    Xcvr 4       REV 01   740-021308   03DZ06A01005      SFP+-10G-SR
    Xcvr 5       REV 01   740-021308   03DZ06A01003      SFP+-10G-SR
    Xcvr 6       REV 01   740-021308   03DZ06A01009      SFP+-10G-SR
    Xcvr 7       REV 01   740-021308   03DZ06A01004      SFP+-10G-SR
PIC 3                   BUILTIN      BUILTIN           8X10GE SFPP
    Xcvr 0       REV 01   740-021308   03DZ06A01017      SFP+-10G-SR
    Xcvr 1       REV 01   740-021308   03DZ06A01016      SFP+-10G-SR
    Xcvr 2       REV 01   740-021308   03DZ06A01024      SFP+-10G-SR
    Xcvr 3       REV 01   740-021308   03DZ06A01008      SFP+-10G-SR
    Xcvr 4       REV 01   740-030658   AD0946A02UH       SFP+-10G-USR
    Xcvr 5       REV 01   740-021308   T09J67913         SFP+-10G-SR
    Xcvr 6       REV 01   740-021308   AD0837ES09G       SFP+-10G-SR
    Xcvr 7       REV 01   740-021308   03DZ06A01015      SFP+-10G-SR
FPC 8            REV 03   750-045372   CAAD3111          MPC Type 3
  CPU            REV 08   711-035209   CAAD8033          HMPC PMB 2G
  MIC 0          REV 03   750-036233   ZL2032            2X40GE QSFP
    PIC 0                 BUILTIN      BUILTIN           2X40GE QSFP
      Xcvr 0     REV 01   740-032986   QB230273          QSFP+-40G-SR4
      Xcvr 1     REV 01   740-032986   QB230254          QSFP+-40G-SR4
  MIC 1          REV 03   750-036233   ZL2021            2X40GE QSFP
    PIC 2                 BUILTIN      BUILTIN           2X40GE QSFP
      Xcvr 0     REV 01   740-032986   QB390962          QSFP+-40G-SR4
```

```
      Xcvr 1     REV 01   740-032986   QB390960          QSFP+-40G-SR4
FPC 9            REV 09   750-037355   CAAF1531          MPC Type 4-2
  CPU            REV 08   711-035209   CAAB9927          HMPC PMB 2G
  PIC 0                   BUILTIN      BUILTIN           4x10GE SFPP
    Xcvr 0       REV 01   740-031980   193363A00525      SFP+-10G-SR
    Xcvr 1       REV 01   740-031980   193363A00504      SFP+-10G-SR
    Xcvr 2       REV 01   740-031980   193363A00368      SFP+-10G-SR
    Xcvr 3       REV 01   740-031980   AJ40JSS           SFP+-10G-SR
  PIC 1                   BUILTIN      BUILTIN           1X100GE CFP
  PIC 2                   BUILTIN      BUILTIN           4x10GE SFPP
    Xcvr 0       REV 01   740-031980   123363A00042      SFP+-10G-SR
    Xcvr 1       REV 01   740-031980   B10M00023         SFP+-10G-SR
    Xcvr 2       REV 01   740-031980   AJ802EM           SFP+-10G-SR
    Xcvr 3       REV 01   740-031980   B11E02348         SFP+-10G-SR
  PIC 3                   BUILTIN      BUILTIN           1X100GE CFP
ADC 0            REV 13   750-043596   ABBX5532          Adapter Card
ADC 1            REV 13   750-043596   ABBX5550          Adapter Card
ADC 2            REV 13   750-043596   ABBX5571          Adapter Card
ADC 3            REV 13   750-043596   ABBX5568          Adapter Card
ADC 4            REV 13   750-043596   ABBX5556          Adapter Card
ADC 5            REV 13   750-043596   ABBX5553          Adapter Card
ADC 6            REV 13   750-043596   ABBX5541          Adapter Card
ADC 7            REV 13   750-043596   ABBX5578          Adapter Card
ADC 8            REV 13   750-043596   ABBX5560          Adapter Card
ADC 9            REV 07   750-043596   ABBV7188          Adapter Card
Fan Tray 0       REV 03   760-046960   ACAY0127          172mm FanTray - 6 Fans
Fan Tray 1       REV 2A   760-046960   ACAY0068          172mm FanTray - 6 Fans
Fan Tray 2       REV 2A   760-046960   ACAY0072          172mm FanTray - 6 Fans
Fan Tray 3       REV 2A   760-046960   ACAY0070          172mm FanTray - 6 Fans
```

show chassis hardware extensive (MX2010 Router)

```
user@host > show chassis hardware extensive
Hardware inventory:
Item             Version  Part number  Serial number     Description
Chassis                                JN11E233DAFK      MX2010
 Jedec Code:   0x7fb0            EEPROM Version:    0x02
                                 S/N:               JN11E233DAFK
 Assembly ID:  0x0557            Assembly Version:  00.00
 Date:         00-00-0000        Assembly Flags:    0x00
 ID: MX2010
 Board Information Record:
  Address 0x00: 00 00 00 00 00 00 00 00 00 00 00 00 00 00 00 00
 I2C Hex Data:
  Address 0x00: 7f b0 02 ff 05 57 00 00 00 00 00 00 00 00 00 00
  Address 0x10: 00 00 00 00 00 00 00 00 00 00 00 00 00 00 00 00
  Address 0x20: 4a 4e 31 31 45 32 33 33 44 41 46 4b 00 00 00 00
  Address 0x30: 00 00 00 ff 00 00 00 00 00 00 00 00 00 00 00 00
  Address 0x40: 00 00 00 00 00 00 00 00 00 00 00 00 00 00 00 00
  Address 0x50: 00 00 00 00 00 00 00 00 00 00 00 00 00 00 00 00
  Address 0x60: 00 00 00 00 00 00 00 00 00 00 00 00 00 00 00 00
  Address 0x70: 00 00 00 00 00 00 00 00 00 00 00 00 00 00 00 00
Midplane         REV 26   750-044636   ABAB9357          Lower Backplane
 Jedec Code:   0x7fb0            EEPROM Version:    0x02
 P/N:          750-044636        S/N:               ABAB9357
 Assembly ID:  0x0b66            Assembly Version:  01.26
 Date:         08-28-2012        Assembly Flags:    0x00
 Version:      REV 26            CLEI Code:         PROTOXCLEI
 ID: Lower Backplane             FRU Model Number:  PROTO-ASSEMBLY
 Board Information Record:
  Address 0x00: ad 01 08 00 2c 21 72 70 a0 00 ff ff ff ff ff ff
```

```
 I2C Hex Data:
  Address 0x00: 7f b0 02 ff 0b 66 01 1a 52 45 56 20 32 36 00 00
  Address 0x10: 00 00 00 00 37 35 30 2d 30 34 34 36 33 36 00 00
  Address 0x20: 53 2f 4e 20 41 42 41 42 39 33 35 37 00 1c 08 07
  Address 0x30: dc ff ff ff ad 01 08 00 2c 21 72 70 a0 00 ff ff
  Address 0x40: ff ff ff ff 01 50 52 4f 54 4f 58 43 4c 45 49 50
  Address 0x50: 52 4f 54 4f 2d 41 53 53 45 4d 42 4c 59 00 00 00
  Address 0x60: 00 00 00 00 00 00 41 30 30 ff ff ff ff ff ff ff
  Address 0x70: ff ff ff c2 ff ff ff ff ff ff ff ff ff ff ff ff
Midplane 1       REV 01   711-044557   ABAB8643          Upper Backplane
 Jedec Code:   0x7fb0            EEPROM Version:    0x01
 P/N:          711-044557        S/N:               ABAB8643
 Assembly ID:  0x0b65            Assembly Version:  01.01
 Date:         07-27-2012        Assembly Flags:    0x00
 Version:      REV 01
 ID: Upper Backplane
 Board Information Record:
  Address 0x00: ff ff ff ff ff ff ff ff ff ff ff ff ff ff ff ff
 I2C Hex Data:
  Address 0x00: 7f b0 01 ff 0b 65 01 01 52 45 56 20 30 31 00 00
  Address 0x10: 00 00 00 00 37 31 31 2d 30 34 34 35 35 37 00 00
  Address 0x20: 53 2f 4e 20 41 42 41 42 38 36 34 33 00 1b 07 07
  Address 0x30: dc ff ff ff ff ff ff ff ff ff ff ff ff ff ff ff
  Address 0x40: ff ff ff ff 00 ff ff ff ff ff ff ff ff ff ff ff
  Address 0x50: ff ff ff ff ff ff ff ff ff ff ff ff ff ff ff ff
  Address 0x60: ff ff ff ff ff ff ff ff ff ff ff ff ff ff ff ff
  Address 0x70: ff ff ff ff ff ff ff ff ff ff ff ff ff ff ff ff
PMP              REV 04   711-032426   ACAJ1677          Power Midplane
Jedec Code:   0x7fb0            EEPROM Version:    0x01
 P/N:          711-032426        S/N:               ACAJ1677
 Assembly ID:  0x045d            Assembly Version:  01.04
 Date:         07-20-2012        Assembly Flags:    0x00
 Version:      REV 04
 ID: Power Midplane
 Board Information Record:
  Address 0x00: ff ff ff ff ff ff ff ff ff ff ff ff ff ff ff ff
 I2C Hex Data:
  Address 0x00: 7f b0 01 ff 04 5d 01 04 52 45 56 20 30 34 00 00
  Address 0x10: 00 00 00 00 37 31 31 2d 30 33 32 34 32 36 00 00
  Address 0x20: 53 2f 4e 20 41 43 41 4a 31 36 37 37 00 14 07 07
  Address 0x30: dc ff ff ff ff ff ff ff ff ff ff ff ff ff ff ff
  Address 0x40: ff ff ff ff 00 ff ff ff ff ff ff ff ff ff ff ff
  Address 0x50: ff ff ff ff ff ff ff ff ff ff ff ff ff ff ff ff
  Address 0x60: ff ff ff ff ff ff ff ff ff ff ff ff ff ff ff ff
  Address 0x70: ff ff ff ff ff ff ff ff ff ff ff ff ff ff ff ff
FPM Board        REV 08   760-044634   ABBV9726          Front Panel Display
 Jedec Code:   0x7fb0            EEPROM Version:    0x02
 P/N:          760-044634        S/N:               ABBV9726
 Assembly ID:  0x0b64            Assembly Version:  01.08
 Date:         09-10-2012        Assembly Flags:    0x00
 Version:      REV 08            CLEI Code:         IPMYA4EJRA
 ID: Front Panel Display         FRU Model Number:  MX2010-CRAFT-S
 Board Information Record:
  Address 0x00: ff ff ff ff ff ff ff ff ff ff ff ff ff ff ff ff
 I2C Hex Data:
  Address 0x00: 7f b0 02 ff 0b 64 01 08 52 45 56 20 30 38 00 00
  Address 0x10: 00 00 00 00 37 36 30 2d 30 34 34 36 33 34 00 00
  Address 0x20: 53 2f 4e 20 41 42 42 56 39 37 32 36 00 0a 09 07
  Address 0x30: dc ff ff ff ff ff ff ff ff ff ff ff ff ff ff ff
  Address 0x40: ff ff ff ff 01 49 50 4d 59 41 34 45 4a 52 41 4d
  Address 0x50: 58 32 30 31 30 2d 43 52 41 46 54 2d 53 00 00 00
```

```
  Address 0x60: 00 00 00 00 00 00 41 00 00 ff ff ff ff ff ff ff
  Address 0x70: ff ff ff 93 ff ff ff ff ff ff ff ff ff ff ff ff
PSM 0            REV 01   740-045050   1E02224000P       DC 52V Power Supply
Module
 Jedec Code:   0x7fb0            EEPROM Version:    0x02
 P/N:          740-045050        S/N:               1E02224000P
 Assembly ID:  0x0478            Assembly Version:  01.01
 Date:         12-06-2012        Assembly Flags:    0x00
 Version:      REV 01            CLEI Code:         XXXXXXXXXX
 ID: DC 52V Power Supply Module  FRU Model Number:  MX2000-PSM-HC-DC-S-A
 Board Information Record:
  Address 0x00: ff ff ff ff ff ff ff ff ff ff ff ff ff ff ff ff
 I2C Hex Data:
  Address 0x00: 7f b0 02 ff 04 78 01 01 52 45 56 20 30 31 00 00
  Address 0x10: 00 00 00 00 37 34 30 2d 30 34 35 30 35 30 00 00
  Address 0x20: 31 45 30 32 32 32 34 30 30 30 50 00 00 06 0c 07
  Address 0x30: dc ff ff ff ff ff ff ff ff ff ff ff ff ff ff ff
  Address 0x40: ff ff ff ff 01 58 58 58 58 58 58 58 58 58 58 4d
  Address 0x50: 58 32 30 30 30 2d 50 53 4d 2d 48 43 2d 44 43 2d
  Address 0x60: 53 2d 41 00 00 00 31 30 31 ff ff ff ff ff ff ff
  Address 0x70: ff ff ff 4a 00 00 00 00 00 00 00 00 00 00 00 00
PSM 1            REV 01   740-045050   1E02224000M       DC 52V Power Supply
Module
 Jedec Code:   0x7fb0            EEPROM Version:    0x02
 P/N:          740-045050        S/N:               1E02224000M
Assembly ID:  0x0478            Assembly Version:  01.01
 Date:         12-06-2012        Assembly Flags:    0x00
 Version:      REV 01            CLEI Code:         XXXXXXXXXX
 ID: DC 52V Power Supply Module  FRU Model Number:  MX2000-PSM-HC-DC-S-A
 Board Information Record:
  Address 0x00: ff ff ff ff ff ff ff ff ff ff ff ff ff ff ff ff
 I2C Hex Data:
  Address 0x00: 7f b0 02 ff 04 78 01 01 52 45 56 20 30 31 00 00
  Address 0x10: 00 00 00 00 37 34 30 2d 30 34 35 30 35 30 00 00
  Address 0x20: 31 45 30 32 32 32 34 30 30 30 4d 00 00 06 0c 07
  Address 0x30: dc ff ff ff ff ff ff ff ff ff ff ff ff ff ff ff
  Address 0x40: ff ff ff ff 01 58 58 58 58 58 58 58 58 58 58 4d
  Address 0x50: 58 32 30 30 30 2d 50 53 4d 2d 48 43 2d 44 43 2d
  Address 0x60: 53 2d 41 00 00 00 31 30 31 ff ff ff ff ff ff ff
  Address 0x70: ff ff ff 4a 00 00 00 00 00 00 00 00 00 00 00 00
...
PDM 0            REV 01   740-045234   1E262250067       DC Power Dist Module
 Jedec Code:   0x7fb0            EEPROM Version:    0x02
 P/N:          740-045234        S/N:               1E262250067
 Assembly ID:  0x047b            Assembly Version:  01.01
 Date:         06-28-2012        Assembly Flags:    0x00
 Version:      REV 01            CLEI Code:         IPUPAJSKAA
 ID: DC Power Dist Module        FRU Model Number:  MX2000-PDM-DC-S-A
 Board Information Record:
  Address 0x00: ff ff ff ff ff ff ff ff ff ff ff ff ff ff ff ff
 I2C Hex Data:
  Address 0x00: 7f b0 02 ff 04 7b 01 01 52 45 56 20 30 31 00 00
  Address 0x10: 00 00 00 00 37 34 30 2d 30 34 35 32 33 34 00 00
  Address 0x20: 31 45 32 36 32 32 35 30 30 36 37 00 00 1c 06 07
  Address 0x30: dc ff ff ff ff ff ff ff ff ff ff ff ff ff ff ff
  Address 0x40: ff ff ff ff 01 49 50 55 50 41 4a 53 4b 41 41 4d
  Address 0x50: 58 32 30 30 30 2d 50 44 4d 2d 44 43 2d 53 2d 41
  Address 0x60: 00 00 00 00 00 00 31 30 31 ff ff ff ff ff ff ff
  Address 0x70: ff ff ff 89 00 00 00 00 00 00 00 00 00 00 00 00
Routing Engine 0 REV 02   740-041821   9009099704        RE-S-1800x4
 Jedec Code:   0x7fb0            EEPROM Version:    0x02
```

```
  P/N:          740-041821        S/N:                9009099704
  Assembly ID:  0x09c0            Assembly Version:   01.02
  Date:         03-15-2012        Assembly Flags:     0x00
  Version:      REV 02
  ID: RE-S-1800x4                 FRU Model Number:   RE-S-1800X4-16G-S
  Board Information Record:
   Address 0x00: 54 32 30 32 37 44 41 2d 34 34 47 42 23 41 23 00
  I2C Hex Data:
   Address 0x00: 7f b0 02 ff 09 c0 01 02 52 45 56 20 30 32 00 00
   Address 0x10: 00 00 00 00 37 34 30 2d 30 34 31 38 32 31 00 00
   Address 0x20: 39 30 30 39 30 39 39 37 30 34 00 00 00 0f 03 07
   Address 0x30: dc ff ff ff 54 32 30 32 37 44 41 2d 34 34 47 42
   Address 0x40: 23 41 23 00 01 00 00 00 00 00 00 00 00 00 00 52
   Address 0x50: 45 2d 53 2d 31 38 30 30 58 34 2d 31 36 47 2d 53
   Address 0x60: 00 00 00 00 00 00 41 30 30 ff ff ff ff ff ff ff
   Address 0x70: ff ff ff 8c ff ff ff ff ff ff ff ff ff ff ff ff
   ad0    3831 MB  UGB30SFA4000T1       SFA4000T1 00000651 Compact Flash
   ad1   30533 MB  UGB94BPH32H0S1-KCI   11000019592       Disk 1
   usb0 (addr 1)  EHCI root hub 0       Intel             uhub0
   usb0 (addr 2)  product 0x0020 32     vendor 0x8087     uhub1
   DIMM 0         SGU04G72H1BD2SA-BB DIE REV-52 PCB REV-54 MFR ID-ce80
   DIMM 1         SGU04G72H1BD2SA-BB DIE REV-52 PCB REV-54 MFR ID-ce80
   DIMM 2         SGU04G72H1BD2SA-BB DIE REV-52 PCB REV-54 MFR ID-ce80
   DIMM 3         SGU04G72H1BD2SA-BB DIE REV-52 PCB REV-54 MFR ID-ce80
Routing Engine 1 REV 02   740-041821   9009099706        RE-S-1800x4
  Jedec Code:   0x7fb0            EEPROM Version:     0x02
  P/N:          740-041821        S/N:                9009099706
  Assembly ID:  0x09c0            Assembly Version:   01.02
  Date:         02-23-2012        Assembly Flags:     0x00
  Version:      REV 02
  ID: RE-S-1800x4                 FRU Model Number:   RE-S-1800X4-16G-S
  Board Information Record:
   Address 0x00: 54 32 30 32 37 44 41 2d 34 34 47 42 23 41 23 00
  I2C Hex Data:
   Address 0x00: 7f b0 02 ff 09 c0 01 02 52 45 56 20 30 32 00 00
   Address 0x10: 00 00 00 00 37 34 30 2d 30 34 31 38 32 31 00 00
  Address 0x20: 39 30 30 39 30 39 39 37 30 36 00 00 00 17 02 07
   Address 0x30: dc ff ff ff 54 32 30 32 37 44 41 2d 34 34 47 42
   Address 0x40: 23 41 23 00 01 00 00 00 00 00 00 00 00 00 00 52
   Address 0x50: 45 2d 53 2d 31 38 30 30 58 34 2d 31 36 47 2d 53
   Address 0x60: 00 00 00 00 00 00 41 30 30 ff ff ff ff ff ff ff
   Address 0x70: ff ff ff 8c ff ff ff ff ff ff ff ff ff ff ff ff
   ad0    3998 MB  Virtium - TuffDrive VCF P1T0200262860208 114 Compact Flash
   ad1   30533 MB  UGB94ARF32H0S3-KC    UNIGEN-499551-000404 Disk 1
CB 0             REV 13   750-040257   CAAF8436          Control Board
  Jedec Code:   0x7fb0            EEPROM Version:     0x02
  P/N:          750-040257        S/N:                CAAF8436
  Assembly ID:  0x0b26            Assembly Version:   01.13
  Date:         08-29-2012        Assembly Flags:     0x00
  Version:      REV 13            CLEI Code:          PROTOXCLEI
  ID: Control Board               FRU Model Number:   PROTO-ASSEMBLY
  Board Information Record:
   Address 0x00: ff ff ff ff ff ff ff ff ff ff ff ff ff ff ff ff
  I2C Hex Data:
   Address 0x00: 7f b0 02 ff 0b 26 01 0d 52 45 56 20 31 33 00 00
   Address 0x10: 00 00 00 00 37 35 30 2d 30 34 30 32 35 37 00 00
   Address 0x20: 53 2f 4e 20 43 41 41 46 38 34 33 36 00 1d 08 07
   Address 0x30: dc ff ff ff ff ff ff ff ff ff ff ff ff ff ff ff
   Address 0x40: ff ff ff ff 01 50 52 4f 54 4f 58 43 4c 45 49 50
   Address 0x50: 52 4f 54 4f 2d 41 53 53 45 4d 42 4c 59 00 00 00
   Address 0x60: 00 00 00 00 00 00 41 30 30 ff ff ff ff ff ff ff
```

```
  Address 0x70: ff ff ff c2 ff ff ff ff ff ff ff ff ff ff ff ff
...
SPMB 0           REV 02   711-041855   ABBV3825          PMB Board
 Jedec Code:   0x7fb0            EEPROM Version:    0x01
 P/N:          711-041855        S/N:               ABBV3825
 Assembly ID:  0x0b29            Assembly Version:  01.02
 Date:         08-14-2012        Assembly Flags:    0x00
 Version:      REV 02
 ID: PMB Board
 Board Information Record:
  Address 0x00: ff ff ff ff ff ff ff ff ff ff ff ff ff ff ff ff
 I2C Hex Data:
  Address 0x00: 7f b0 01 ff 0b 29 01 02 52 45 56 20 30 32 00 00
  Address 0x10: 00 00 00 00 37 31 31 2d 30 34 31 38 35 35 00 00
  Address 0x20: 53 2f 4e 20 41 42 42 56 33 38 32 35 00 0e 08 07
  Address 0x30: dc ff ff ff ff ff ff ff ff ff ff ff ff ff ff ff
  Address 0x40: ff ff ff ff 00 ff ff ff ff ff ff ff ff ff ff ff
  Address 0x50: ff ff ff ff ff ff ff ff ff ff ff ff ff ff ff ff
  Address 0x60: ff ff ff ff ff ff ff ff ff ff ff ff ff ff ff ff
  Address 0x70: ff ff ff ff 00 00 00 00 00 00 00 00 00 00 00 00
...
SFB 0            REV 05   711-044466   ABBX5682          Switch Fabric Board
 Jedec Code:   0x7fb0            EEPROM Version:    0x02
 P/N:          711-044466        S/N:               ABBX5682
 Assembly ID:  0x0b25            Assembly Version:  01.05
 Date:         09-07-2012        Assembly Flags:    0x00
 Version:      REV 05            CLEI Code:         PROTOXCLEI
 ID: Switch Fabric Board         FRU Model Number:  PROTO-ASSEMBLY
 Board Information Record:
  Address 0x00: ff ff ff ff ff ff ff ff ff ff ff ff ff ff ff ff
 I2C Hex Data:
  Address 0x00: 7f b0 02 ff 0b 25 01 05 52 45 56 20 30 35 00 00
  Address 0x10: 00 00 00 00 37 31 31 2d 30 34 34 34 36 36 00 00
  Address 0x20: 53 2f 4e 20 41 42 42 58 35 36 38 32 00 07 09 07
  Address 0x30: dc ff ff ff ff ff ff ff ff ff ff ff ff ff ff ff
  Address 0x40: ff ff ff ff 01 50 52 4f 54 4f 58 43 4c 45 49 50
  Address 0x50: 52 4f 54 4f 2d 41 53 53 45 4d 42 4c 59 00 00 00
  Address 0x60: 00 00 00 00 00 00 41 30 30 ff ff ff ff ff ff ff
  Address 0x70: ff ff ff c2 00 00 00 01 00 00 00 00 00 00 48 00
...
FPC 0            REV 09   750-037355   CAAF0924          MPC Type 4-2
 Jedec Code:   0x7fb0            EEPROM Version:    0x02
 P/N:          750-037355        S/N:               CAAF0924
 Assembly ID:  0x0b4e            Assembly Version:  01.09
 Date:         05-21-2012        Assembly Flags:    0x00
 Version:      REV 09            CLEI Code:         PROTOXCLEI
 ID: MPC Type 4-2                FRU Model Number:  MPC4E-2CGE-8XGE
 Board Information Record:
  Address 0x00: ff ff ff ff ff ff ff ff ff ff ff ff ff ff ff ff
 I2C Hex Data:
  Address 0x00: 7f b0 02 ff 0b 4e 01 09 52 45 56 20 30 39 00 00
  Address 0x10: 00 00 00 00 37 35 30 2d 30 33 37 33 35 35 00 00
  Address 0x20: 53 2f 4e 20 43 41 41 46 30 39 32 34 00 15 05 07
  Address 0x30: dc ff ff ff ff ff ff ff ff ff ff ff ff ff ff ff
  Address 0x40: ff ff ff ff 01 50 52 4f 54 4f 58 43 4c 45 49 4d
  Address 0x50: 50 43 34 45 2d 32 43 47 45 2d 38 58 47 45 00 00
  Address 0x60: 00 00 00 00 00 00 30 39 00 ff ff ff ff ff ff ff
  Address 0x70: ff ff ff c6 ff ff ff ff ff ff ff ff ff ff ff ff
  CPU            REV 08   711-035209   CAAB9842          HMPC PMB 2G
 Jedec Code:   0x7fb0            EEPROM Version:    0x01
 P/N:          711-035209        S/N:               CAAB9842
```

```
 Assembly ID:  0x0b04            Assembly Version:  01.08
 Date:         05-17-2012        Assembly Flags:    0x00
 Version:      REV 08
 ID: HMPC PMB 2G
 Board Information Record:
  Address 0x00: ff ff ff ff ff ff ff ff ff ff ff ff ff ff ff ff
 I2C Hex Data:
  Address 0x00: 7f b0 01 ff 0b 04 01 08 52 45 56 20 30 38 00 00
  Address 0x10: 00 00 00 00 37 31 31 2d 30 33 35 32 30 39 00 00
  Address 0x20: 53 2f 4e 20 43 41 41 42 39 38 34 32 00 11 05 07
  Address 0x30: dc ff ff ff ff ff ff ff ff ff ff ff ff ff ff ff
  Address 0x40: ff ff ff ff 00 ff ff ff ff ff ff ff ff ff ff ff
  Address 0x50: ff ff ff ff ff ff ff ff ff ff ff ff ff ff ff ff
  Address 0x60: ff ff ff ff ff ff ff ff ff ff ff ff ff ff ff ff
  Address 0x70: ff ff ff ff 00 00 00 00 00 00 00 00 00 00 00 00
  PIC 0                   BUILTIN      BUILTIN           4x10GE SFPP
 Jedec Code:   0x0000            EEPROM Version:    0x00
 P/N:          BUILTIN           S/N:               BUILTIN
 Assembly ID:  0x0a53            Assembly Version:  00.00
 Date:         00-00-0000        Assembly Flags:    0x00
 ID: 4x10GE SFPP
 Board Information Record:
  Address 0x00: 00 00 00 00 00 00 00 00 00 00 00 00 00 00 00 00
 I2C Hex Data:
  Address 0x00: 00 00 00 00 0a 53 00 00 00 00 00 00 00 00 00 00
  Address 0x10: 00 00 00 00 42 55 49 4c 54 49 4e 00 4d 58 43 00
  Address 0x20: 42 55 49 4c 54 49 4e 00 4d 58 43 00 00 00 00 00
  Address 0x30: 00 00 00 00 00 00 00 00 00 00 00 00 00 00 00 00
  Address 0x40: 00 00 00 00 00 00 00 00 00 00 00 00 00 00 00 00
  Address 0x50: 00 00 00 00 00 00 00 00 00 00 00 00 00 00 00 00
  Address 0x60: 00 00 00 00 00 00 00 00 00 00 00 00 00 00 00 00
Address 0x70: 00 00 00 00 c0 02 ae 64 00 00 00 00 0a 52 00 00
    Xcvr 0       REV 01   740-021308   19T511101656      SFP+-10G-SR
    Xcvr 1       REV 01   740-031980   AMA04RU           SFP+-10G-SR
    Xcvr 2       REV 01   740-031980   193363A00558      SFP+-10G-SR
    Xcvr 3       REV 01   740-031980   B10M00202         SFP+-10G-SR
...
ADC 0            REV 13   750-043596   ABBX5532          Adapter Card
 Jedec Code:   0x7fb0            EEPROM Version:    0x02
 P/N:          750-043596        S/N:               ABBX5532
 Assembly ID:  0x0b3d            Assembly Version:  01.13
 Date:         09-12-2012        Assembly Flags:    0x00
 Version:      REV 13            CLEI Code:         IPUCBA8CAA
 ID: Adapter Card                FRU Model Number:  MX2000-LC-ADAPTER
 Board Information Record:
  Address 0x00: ff ff ff ff ff ff ff ff ff ff ff ff ff ff ff ff
 I2C Hex Data:
  Address 0x00: 7f b0 02 ff 0b 3d 01 0d 52 45 56 20 31 33 00 00
  Address 0x10: 00 00 00 00 37 35 30 2d 30 34 33 35 39 36 00 00
  Address 0x20: 53 2f 4e 20 41 42 42 58 35 35 33 32 00 0c 09 07
  Address 0x30: dc ff ff ff ff ff ff ff ff ff ff ff ff ff ff ff
  Address 0x40: ff ff ff ff 01 49 50 55 43 42 41 38 43 41 41 4d
  Address 0x50: 58 32 30 30 30 2d 4c 43 2d 41 44 41 50 54 45 52
  Address 0x60: 00 00 00 00 00 00 41 00 00 ff ff ff ff ff ff ff
  Address 0x70: ff ff ff 3a 00 00 00 00 00 00 00 00 00 00 00 00
...
```

show chassis hardware models (MX2010 Router)

```
user@host > show chassis hardware models
```

```
Hardware inventory:
Item             Version  Part number  Serial number     FRU model number
FPM Board        REV 06   711-032349   ZX8744            711-032349
PSM 4            REV 0C   740-033727   VK00254           00000000000000000000000
PSM 5            REV 0B   740-033727   VG00015           00000000000000000000000
PSM 6            REV 0B   740-033727   VH00097           00000000000000000000000
PSM 7            REV 0C   740-033727   VJ00151           00000000000000000000000
PSM 8            REV 0C   740-033727   VJ00149           00000000000000000000000
PDM 0            REV 0B   740-038109   WA00008
PDM 1            REV 0B   740-038109   WA00014
Routing Engine 0 REV 02   740-041821   9009094134        RE-S-1800X4-16G-S
Routing Engine 1 REV 02   740-041821   9009094141        RE-S-1800X4-16G-S
CB 0             REV 08   750-040257   CAAB3491          750-040257
CB 1             REV 08   750-040257   CAAB3489          750-040257
SFB 0            REV 06   711-032385   ZV1828            711-032385
SFB 1            REV 07   711-032385   ZZ2568            711-032385
SFB 2            REV 07   711-032385   ZZ2563            711-032385
SFB 3            REV 07   711-032385   ZZ2564            711-032385
SFB 4            REV 07   711-032385   ZZ2580            711-032385
SFB 5            REV 07   711-032385   ZZ2579            711-0323856
SFB 6            REV 07   711-032385   CAAB4882          711-044170
SFB 7            REV 07   711-032385   CAAB4898          711-044170
FPC 0            REV 33   750-028467   CAAB1919          MPC-3D-16XGE-SFPP
FPC 1            REV 21   750-033205   ZG5027            MX-MPC3-3D
  MIC 0          REV 03   750-033307   ZV6299            MIC3-3D-10XGE-SFPP
  MIC 1          REV 03   750-033307   ZV6268            MIC3-3D-10XGE-SFPP
FPC 8            REV 22   750-031089   ZT9746            MX-MPC2-3D
  MIC 0          REV 26   750-028392   ABBS1150          MIC-3D-20GE-SFP
  MIC 1          REV 26   750-028387   ABBR9582          MIC-3D-4XGE-XFP
FPC 9            REV 11   750-036284   ZL3591            MPCE-3D-16XGE-SFPP
ADC 0            REV 05   750-043596   CAAC2073          750-043596
ADC 1            REV 01   750-043596   ZV4117            750-043596
ADC 8            REV 01   750-043596   ZV4107            750-043596
ADC 9            REV 02   750-043596   ZW1555            750-043596
Fan Tray 0       REV 2A   760-046960   ACAY0015
Fan Tray 1       REV 2A   760-046960   ACAY0019
Fan Tray 2       REV 2A   760-046960   ACAY0020
Fan Tray 3       REV 2A   760-046960   ACAY0021
```

show chassis hardware clei-models (MX2010 Routers)

```
user@host > show chassis hardware clei-models
Hardware inventory:
Item             Version  Part number  CLEI code         FRU model number
FPM Board        REV 06   711-032349   PROTOXCLEI        711-032349
PSM 4            REV 0C   740-033727   0000000000        00000000000000000000000
PSM 5            REV 0B   740-033727   0000000000        00000000000000000000000
PSM 6            REV 0B   740-033727   0000000000        00000000000000000000000
PSM 7            REV 0C   740-033727   0000000000        00000000000000000000000
PSM 8            REV 0C   740-033727   0000000000        00000000000000000000000
PDM 0            REV 0B   740-038109
PDM 1            REV 0B   740-038109
Routing Engine 0 REV 02   740-041821                     RE-S-1800X4-16G-S
Routing Engine 1 REV 02   740-041821                     RE-S-1800X4-16G-S
CB 0             REV 08   750-040257   PROTOXCLEI        750-040257
CB 1             REV 08   750-040257   PROTOXCLEI        750-040257
SFB 0            REV 06   711-032385   PROTOXCLEI        711-032385
SFB 1            REV 07   711-032385   PROTOXCLEI        711-032385
SFB 2            REV 07   711-032385   PROTOXCLEI        711-032385
SFB 3            REV 07   711-032385   PROTOXCLEI        711-032385
SFB 4            REV 07   711-032385   PROTOXCLEI        711-032385
```

```
SFB 5            REV 07   711-032385   PROTOXCLEI        711-0323856
SFB 6            REV 07   711-032385   PROTOXCLEI        711-044170
SFB 7            REV 07   711-032385   PROTOXCLEI        711-044170
FPC 0            REV 33   750-028467                     MPC-3D-16XGE-SFPP
FPC 1            REV 21   750-033205                     MX-MPC3-3D
  MIC 0          REV 03   750-033307   PROTOXCLEI        MIC3-3D-10XGE-SFPP
  MIC 1          REV 03   750-033307   PROTOXCLEI        MIC3-3D-10XGE-SFPP
FPC 8            REV 22   750-031089   COUIBAYBAA        MX-MPC2-3D
  MIC 0          REV 26   750-028392   COUIA15BAA        MIC-3D-20GE-SFP
  MIC 1          REV 26   750-028387   COUIA16BAA        MIC-3D-4XGE-XFP
FPC 9            REV 11   750-036284   CMUIACGBAA        MPCE-3D-16XGE-SFPP
ADC 0            REV 05   750-043596   PROTOXCLEI        750-043596
ADC 1            REV 01   750-043596   PROTOXCLEI        750-043596
ADC 8            REV 01   750-043596   PROTOXCLEI        750-043596
ADC 9            REV 02   750-043596   PROTOXCLEI        750-043596
Fan Tray 0       REV 2A   760-046960
Fan Tray 1       REV 2A   760-046960
Fan Tray 2       REV 2A   760-046960
Fan Tray 3       REV 2A   760-046960
```

show chassis hardware (MX2010 Routers with MPC6E and OTN MIC)

```
user@host> show chassis hardware
Hardware inventory:
Item             Version  Part number  Serial number     Description
Chassis                                JN11C9AFEAFK      MX2010
Midplane         REV 35   750-044636   ABAB9188          Lower Backplane
Midplane 1       REV 02   711-044557   ABAB8729          Upper Backplane
PMP              REV 04   711-032426   ACAJ2432          Power Midplane
FPM Board        REV 09   760-044634   ABCA4314          Front Panel Display
PSM 0            REV 01   740-050037   1EDB321015C       DC 52V Power Supply
Module
PSM 1            REV 01   740-050037   1EDB321015J       DC 52V Power Supply
Module
PSM 2            REV 01   740-050037   1EDB32000K8       DC 52V Power Supply
Module
PSM 3            REV 01   740-050037   1EDB32101JW       DC 52V Power Supply
Module
PSM 4            REV 01   740-050037   1EDB321015G       DC 52V Power Supply
Module
PSM 5            REV 01   740-050037   1EDB32101HH       DC 52V Power Supply
Module
PSM 6            REV 01   740-050037   1EDB32101HD       DC 52V Power Supply
Module
PSM 7            REV 01   740-050037   1EDB321015F       DC 52V Power Supply
Module
PSM 8            REV 01   740-050037   1EDB321015B       DC 52V Power Supply
Module
PDM 0            REV 03   740-045234   1EFA3220433       DC Power Dist Module
PDM 1            REV 03   740-045234   1EFA3220425       DC Power Dist Module
Routing Engine 0 REV 02   740-041821   9009115685        RE-S-1800x4
Routing Engine 1 REV 02   740-041821   9009099711        RE-S-1800x4
CB 0             REV 23   750-040257   CABE8395          Control Board
CB 1             REV 12   750-040257   CAAD9499          Control Board
SPMB 0           REV 02   711-041855   ABCG8426          PMB Board
SPMB 1           REV 02   711-041855   ABBS1481          PMB Board
SFB 0            REV 06   711-044466   ABCD5013          Switch Fabric Board
SFB 1            REV 06   711-044466   ABCD5160          Switch Fabric Board
SFB 2            REV 06   711-044466   ABCD5175          Switch Fabric Board
SFB 3            REV 06   711-044466   ABCD4938          Switch Fabric Board
SFB 4            REV 06   711-044466   ABCD4944          Switch Fabric Board
```

```
SFB 5            REV 06   711-044466   ABCD4968          Switch Fabric Board
SFB 6            REV 06   711-044466   ABCD5267          Switch Fabric Board
SFB 7            REV 06   711-044466   ABCD4997          Switch Fabric Board
FPC 0            REV 59   750-044130   ABCT7676          MPC6E 3D
  CPU            REV 10   711-045719   ABCK8527          RMPC PMB
  XLM 0          REV 13   711-046638   ABCT7810          MPC6E XL
  XLM 1          REV 13   711-046638   ABCT7811          MPC6E XL
FPC 2            REV 27   750-033205   ZL6014            MPCE Type 3 3D
  CPU            REV 07   711-035209   ZK9068            HMPC PMB 2G
  MIC 0          REV 14   750-033196   CAAW9214          1X100GE CXP
    PIC 0                 BUILTIN      BUILTIN           1X100GE CXP
      Xcvr 0     REV 01   740-046563   XC49FC030         CFP2-100G-SR10
  MIC 1          REV 18   750-033199   CAAC3231          1X100GE CFP
    PIC 2                 BUILTIN      BUILTIN           1X100GE CFP
FPC 3            REV 59   750-044130   ABCT7682          MPC6E 3D
  CPU            REV 10   711-045719   ABCK8531          RMPC PMB
  XLM 0          REV 13   711-046638   ABCT7818          MPC6E XL
  XLM 1          REV 13   711-046638   ABCT7819          MPC6E XL
FPC 4            REV 33   750-044130   ABBY9278          MPC6E 3D
  CPU            REV 09   711-045719   ABBY8677          RMPC PMB
  XLM 0          REV 06.2.00 711-046638 ABBY8844         MPC6E XL
  XLM 1          REV 06.2.00 711-046638 ABBY8830         MPC6E XL
FPC 5            REV 59   750-044130   ABCT7675          MPC6E 3D
  CPU            REV 10   711-045719   ABCK8526          RMPC PMB
  XLM 0          REV 13   711-046638   ABCT7808          MPC6E XL
  XLM 1          REV 13   711-046638   ABCT7809          MPC6E XL
FPC 6            REV 30   750-028467   ZM4986            MPC 3D 16x 10GE
 CPU            REV 10   711-029089   ZP6541            AMPC PMB
  PIC 0                 BUILTIN      BUILTIN           4x 10GE(LAN) SFP+
    Xcvr 0       REV 01   740-021308   AQ43GAC           SFP+-10G-SR
  PIC 1                 BUILTIN      BUILTIN           4x 10GE(LAN) SFP+
    Xcvr 0       REV 01   740-031980   ALM0A6D           SFP+-10G-SR
    Xcvr 1       REV 01   740-031980   AQF0RB3           SFP+-10G-SR
    Xcvr 2       REV 01   740-031980   153363A00333      SFP+-10G-SR
    Xcvr 3       REV 01   740-021308   AN10KYE           SFP+-10G-SR
  PIC 2                 BUILTIN      BUILTIN           4x 10GE(LAN) SFP+
    Xcvr 0       REV 01   740-021308   APK04YM           SFP+-10G-SR
  PIC 3                 BUILTIN      BUILTIN           4x 10GE(LAN) SFP+
    Xcvr 0       REV 01   740-031980   AQF0H44           SFP+-10G-SR
FPC 8            REV 38   750-031090   CABF7313          MPC Type 2 3D EQ
  CPU            REV 08   711-030884   CABE6727          MPC PMB 2G
  MIC 0          REV 18   750-028380   YK8253            3D 2x 10GE XFP
    PIC 0                 BUILTIN      BUILTIN           1x 10GE XFP
      Xcvr 0     REV 03   740-014289   AD1148M00TP       XFP-10G-SR
    PIC 1                 BUILTIN      BUILTIN           1x 10GE XFP
  QXM 0          REV 06   711-028408   CABC5614          MPC QXM
  QXM 1          REV 06   711-028408   CABC5550          MPC QXM
FPC 9            REV 39   750-044130   ABCK1652          MPC6E 3D
  CPU            REV 09   711-045719   ABCK1655          RMPC PMB
  MIC 0          REV 09   750-049457   ABCP1230          2X100GE CFP2 OTN
    PIC 0                 BUILTIN      BUILTIN           2X100GE CFP2 OTN
      Xcvr 0               NON-JNPR     37300222WP0002    CFP2-100G-LR4-D
      Xcvr 1               NON-JNPR     FD46F001Y         CFP2-100G-SR10
  MIC 1          REV 07   750-049457   ABCV6662          2X100GE CFP2 OTN
    PIC 1                 BUILTIN      BUILTIN           2X100GE CFP2 OTN
      Xcvr 0               NON-JNPR     UQD0014           CFP2-100G-LR4-D
      Xcvr 1               NON-JNPR     J13J68335         CFP2-100G-LR4-D
  XLM 0          REV 07.2.00 711-046638 ABCK5491          MPC6E XL
  XLM 1          REV 07.2.00 711-046638 ABCK5475          MPC6E XL
ADC 1            REV 17   750-043596   ABCG9023          Adapter Card
ADC 2            REV 01   750-043596   ZV4079            Adapter Card
```

```
ADC 6            REV 17   750-043596   ABCG8866          Adapter Card
ADC 8            REV 17   750-043596   ABCA8993          Adapter Card
Fan Tray 0       REV 06   760-046960   ACAY0354          172mm FanTray - 6 Fans
Fan Tray 1       REV 06   760-046960   ACAY0831          172mm FanTray - 6 Fans
Fan Tray 2       REV 06   760-046960   ACAY0892          172mm FanTray - 6 Fans
Fan Tray 3       REV 06   760-046960   ACAY0839          172mm FanTray - 6 Fans
```

show chassis hardware detail (MX2010 Routers with MPC6E and OTN MIC)

```
user@host> show chassis hardware detail
Hardware inventory:
Item             Version  Part number  Serial number     Description
Chassis                                JN11C9AFEAFK      MX2010
Midplane         REV 35   750-044636   ABAB9188          Lower Backplane
Midplane 1       REV 02   711-044557   ABAB8729          Upper Backplane
PMP              REV 04   711-032426   ACAJ2432          Power Midplane
FPM Board        REV 09   760-044634   ABCA4314          Front Panel Display
PSM 0            REV 01   740-050037   1EDB321015C       DC 52V Power Supply
Module
PSM 1            REV 01   740-050037   1EDB321015J       DC 52V Power Supply
Module
PSM 2            REV 01   740-050037   1EDB32000K8       DC 52V Power Supply
Module
PSM 3            REV 01   740-050037   1EDB32101JW       DC 52V Power Supply
Module
PSM 4            REV 01   740-050037   1EDB321015G       DC 52V Power Supply
Module
PSM 5            REV 01   740-050037   1EDB32101HH       DC 52V Power Supply
Module
PSM 6            REV 01   740-050037   1EDB32101HD       DC 52V Power Supply
Module
PSM 7            REV 01   740-050037   1EDB321015F       DC 52V Power Supply
Module
PSM 8            REV 01   740-050037   1EDB321015B       DC 52V Power Supply
Module
PDM 0            REV 03   740-045234   1EFA3220433       DC Power Dist Module
PDM 1            REV 03   740-045234   1EFA3220425       DC Power Dist Module
Routing Engine 0 REV 02   740-041821   9009115685        RE-S-1800x4
  ad0    3998 MB  Virtium - TuffDrive VCF P1T0200274310822 191 Compact Flash
  ad1   30533 MB  UGB94BPH32H0S1-KCI   11000043190       Disk 1
  usb0 (addr 1)  EHCI root hub 0       Intel             uhub0
  usb0 (addr 2)  product 0x0020 32     vendor 0x8087     uhub1
  DIMM 0         VL31B5263F-F8SD DIE REV-0 PCB REV-0     MFR ID-ce80
  DIMM 1         VL31B5263F-F8SD DIE REV-0 PCB REV-0     MFR ID-ce80
  DIMM 2         VL31B5263F-F8SD DIE REV-0 PCB REV-0     MFR ID-ce80
  DIMM 3         VL31B5263F-F8SD DIE REV-0 PCB REV-0     MFR ID-ce80
Routing Engine 1 REV 02   740-041821   9009099711        RE-S-1800x4
  ad0    3998 MB  Virtium - TuffDrive VCF P1T0200262860208 30 Compact Flash
  ad1   30533 MB  UGB94ARF32H0S3-KC    UNIGEN-499551-000146 Disk 1
CB 0             REV 23   750-040257   CABE8395          Control Board
CB 1             REV 12   750-040257   CAAD9499          Control Board
SPMB 0           REV 02   711-041855   ABCG8426          PMB Board
SPMB 1           REV 02   711-041855   ABBS1481          PMB Board
SFB 0            REV 06   711-044466   ABCD5013          Switch Fabric Board
SFB 1            REV 06   711-044466   ABCD5160          Switch Fabric Board
SFB 2            REV 06   711-044466   ABCD5175          Switch Fabric Board
SFB 3            REV 06   711-044466   ABCD4938          Switch Fabric Board
SFB 4            REV 06   711-044466   ABCD4944          Switch Fabric Board
SFB 5            REV 06   711-044466   ABCD4968          Switch Fabric Board
SFB 6            REV 06   711-044466   ABCD5267          Switch Fabric Board
SFB 7            REV 06   711-044466   ABCD4997          Switch Fabric Board
```

```
FPC 0            REV 59   750-044130   ABCT7676          MPC6E 3D
  CPU            REV 10   711-045719   ABCK8527          RMPC PMB
  XLM 0          REV 13   711-046638   ABCT7810          MPC6E XL
  XLM 1          REV 13   711-046638   ABCT7811          MPC6E XL
FPC 2            REV 27   750-033205   ZL6014            MPCE Type 3 3D
  CPU            REV 07   711-035209   ZK9068            HMPC PMB 2G
  MIC 0          REV 14   750-033196   CAAW9214          1X100GE CXP
    PIC 0                 BUILTIN      BUILTIN           1X100GE CXP
      Xcvr 0     REV 01   740-046563   XC49FC030         CFP2-100G-SR10
  MIC 1          REV 18   750-033199   CAAC3231          1X100GE CFP
    PIC 2                 BUILTIN      BUILTIN           1X100GE CFP
FPC 3            REV 59   750-044130   ABCT7682          MPC6E 3D
  CPU            REV 10   711-045719   ABCK8531          RMPC PMB
  XLM 0          REV 13   711-046638   ABCT7818          MPC6E XL
 XLM 1          REV 13   711-046638   ABCT7819          MPC6E XL
FPC 4            REV 33   750-044130   ABBY9278          MPC6E 3D
  CPU            REV 09   711-045719   ABBY8677          RMPC PMB
  XLM 0          REV 06.2.00 711-046638 ABBY8844         MPC6E XL
  XLM 1          REV 06.2.00 711-046638 ABBY8830         MPC6E XL
FPC 5            REV 59   750-044130   ABCT7675          MPC6E 3D
  CPU            REV 10   711-045719   ABCK8526          RMPC PMB
  XLM 0          REV 13   711-046638   ABCT7808          MPC6E XL
  XLM 1          REV 13   711-046638   ABCT7809          MPC6E XL
FPC 6            REV 30   750-028467   ZM4986            MPC 3D 16x 10GE
  CPU            REV 10   711-029089   ZP6541            AMPC PMB
  PIC 0                   BUILTIN      BUILTIN           4x 10GE(LAN) SFP+
    Xcvr 0       REV 01   740-021308   AQ43GAC           SFP+-10G-SR
  PIC 1                   BUILTIN      BUILTIN           4x 10GE(LAN) SFP+
    Xcvr 0       REV 01   740-031980   ALM0A6D           SFP+-10G-SR
    Xcvr 1       REV 01   740-031980   AQF0RB3           SFP+-10G-SR
    Xcvr 2       REV 01   740-031980   153363A00333      SFP+-10G-SR
    Xcvr 3       REV 01   740-021308   AN10KYE           SFP+-10G-SR
  PIC 2                   BUILTIN      BUILTIN           4x 10GE(LAN) SFP+
    Xcvr 0       REV 01   740-021308   APK04YM           SFP+-10G-SR
  PIC 3                   BUILTIN      BUILTIN           4x 10GE(LAN) SFP+
    Xcvr 0       REV 01   740-031980   AQF0H44           SFP+-10G-SR
FPC 8            REV 38   750-031090   CABF7313          MPC Type 2 3D EQ
  CPU            REV 08   711-030884   CABE6727          MPC PMB 2G
  MIC 0          REV 18   750-028380   YK8253            3D 2x 10GE XFP
    PIC 0                 BUILTIN      BUILTIN           1x 10GE XFP
      Xcvr 0     REV 03   740-014289   AD1148M00TP       XFP-10G-SR
    PIC 1                 BUILTIN      BUILTIN           1x 10GE XFP
  QXM 0          REV 06   711-028408   CABC5614          MPC QXM
  QXM 1          REV 06   711-028408   CABC5550          MPC QXM
FPC 9            REV 39   750-044130   ABCK1652          MPC6E 3D
  CPU            REV 09   711-045719   ABCK1655          RMPC PMB
  MIC 0          REV 09   750-049457   ABCP1230          2X100GE CFP2 OTN
    PIC 0                 BUILTIN      BUILTIN           2X100GE CFP2 OTN
      Xcvr 0              NON-JNPR     37300222WP0002    CFP2-100G-LR4-D
      Xcvr 1              NON-JNPR     FD46F001Y         CFP2-100G-SR10
  MIC 1          REV 07   750-049457   ABCV6662          2X100GE CFP2 OTN
    PIC 1                 BUILTIN      BUILTIN           2X100GE CFP2 OTN
      Xcvr 0              NON-JNPR     UQD0014           CFP2-100G-LR4-D
      Xcvr 1              NON-JNPR     J13J68335         CFP2-100G-LR4-D
  XLM 0          REV 07.2.00 711-046638 ABCK5491         MPC6E XL
  XLM 1          REV 07.2.00 711-046638 ABCK5475         MPC6E XL
ADC 1            REV 17   750-043596   ABCG9023          Adapter Card
ADC 2            REV 01   750-043596   ZV4079            Adapter Card
ADC 6            REV 17   750-043596   ABCG8866          Adapter Card
ADC 8            REV 17   750-043596   ABCA8993          Adapter Card
Fan Tray 0       REV 06   760-046960   ACAY0354          172mm FanTray - 6 Fans
```

```
Fan Tray 1       REV 06   760-046960   ACAY0831          172mm FanTray - 6 Fans
Fan Tray 2       REV 06   760-046960   ACAY0892          172mm FanTray - 6 Fans
Fan Tray 3       REV 06   760-046960   ACAY0839          172mm FanTray - 6 Fans
```

show chassis hardware extensive (MX2010 Routers with MPC6E and OTN MIC)

```
user@host> show chassis hardware extensive
Hardware inventory:
Item             Version  Part number  Serial number     Description
Chassis                                JN11C9AFEAFK      MX2010
 Jedec Code:   0x7fb0            EEPROM Version:    0x02
                                 S/N:               JN11C9AFEAFK
 Assembly ID:  0x0557            Assembly Version:  00.00
 Date:         00-00-0000        Assembly Flags:    0x00
 ID: MX2010
 Board Information Record:
  Address 0x00: 00 00 00 00 00 00 00 00 00 00 00 00 00 00 00 00
 I2C Hex Data:
  Address 0x00: 7f b0 02 ff 05 57 00 00 00 00 00 00 00 00 00 00
  Address 0x10: 00 00 00 00 00 00 00 00 00 00 00 00 00 00 00 00
  Address 0x20: 4a 4e 31 31 43 39 41 46 45 41 46 4b 00 00 00 00
  Address 0x30: 00 00 00 ff 00 00 00 00 00 00 00 00 00 00 00 00
  Address 0x40: 00 00 00 00 00 00 00 00 00 00 00 00 00 00 00 00
  Address 0x50: 00 00 00 00 00 00 00 00 00 00 00 00 00 00 00 00
  Address 0x60: 00 00 00 00 00 00 00 00 00 00 00 00 00 00 00 00
  Address 0x70: 00 00 00 00 00 00 00 00 00 00 00 00 00 00 00 00
Midplane         REV 35   750-044636   ABAB9188          Lower Backplane
 Jedec Code:   0x7fb0            EEPROM Version:    0x02
 P/N:          750-044636        S/N:               ABAB9188
 Assembly ID:  0x0b66            Assembly Version:  01.35
 Date:         06-21-2013        Assembly Flags:    0x00
 Version:      REV 35            CLEI Code:         IPMU810ARA
 ID: Lower Backplane             FRU Model Number:  CHAS-BP-MX2010-S
 Board Information Record:
  Address 0x00: ad 01 08 00 3c 8a b0 38 68 00 ff ff ff ff ff ff
 I2C Hex Data:
  Address 0x00: 7f b0 02 ff 0b 66 01 23 52 45 56 20 33 35 00 00
  Address 0x10: 00 00 00 00 37 35 30 2d 30 34 34 36 33 36 00 00
  Address 0x20: 53 2f 4e 20 41 42 41 42 39 31 38 38 00 15 06 07
  Address 0x30: dd ff ff ff ad 01 08 00 3c 8a b0 38 68 00 ff ff
  Address 0x40: ff ff ff ff 01 49 50 4d 55 38 31 30 41 52 41 43
  Address 0x50: 48 41 53 2d 42 50 2d 4d 58 32 30 31 30 2d 53 00
  Address 0x60: 00 00 00 00 00 00 30 36 00 ff ff ff ff ff ff ff
  Address 0x70: ff ff ff f8 ff ff ff ff ff ff ff ff ff ff ff ff
Midplane 1       REV 02   711-044557   ABAB8729          Upper Backplane
 Jedec Code:   0x7fb0            EEPROM Version:    0x01
 P/N:          711-044557        S/N:               ABAB8729
 Assembly ID:  0x0b65            Assembly Version:  01.02
 Date:         03-21-2013        Assembly Flags:    0x00
 Version:      REV 02
 ID: Upper Backplane
 Board Information Record:
  Address 0x00: ff ff ff ff ff ff ff ff ff ff ff ff ff ff ff ff
 I2C Hex Data:
  Address 0x00: 7f b0 01 ff 0b 65 01 02 52 45 56 20 30 32 00 00
  Address 0x10: 00 00 00 00 37 31 31 2d 30 34 34 35 35 37 00 00
  Address 0x20: 53 2f 4e 20 41 42 41 42 38 37 32 39 00 15 03 07
  Address 0x30: dd ff ff ff ff ff ff ff ff ff ff ff ff ff ff ff
  Address 0x40: ff ff ff ff 01 00 00 00 00 00 00 00 00 00 00 00
  Address 0x50: 00 00 00 00 00 00 00 00 00 00 00 00 00 00 00 00
  Address 0x60: 00 00 00 00 00 00 ff ff ff ff ff ff ff ff ff ff
```

```
  Address 0x70: ff ff ff ff ff ff ff ff ff ff ff ff ff ff ff ff
PMP              REV 04   711-032426   ACAJ2432          Power Midplane
 Jedec Code:   0x7fb0            EEPROM Version:    0x01
 P/N:          711-032426        S/N:               ACAJ2432
 Assembly ID:  0x045d            Assembly Version:  01.04
 Date:         03-28-2013        Assembly Flags:    0x00
 Version:      REV 04
 ID: Power Midplane
 Board Information Record:
  Address 0x00: ff ff ff ff ff ff ff ff ff ff ff ff ff ff ff ff
 I2C Hex Data:
  Address 0x00: 7f b0 01 ff 04 5d 01 04 52 45 56 20 30 34 00 00
  Address 0x10: 00 00 00 00 37 31 31 2d 30 33 32 34 32 36 00 00
  Address 0x20: 53 2f 4e 20 41 43 41 4a 32 34 33 32 00 1c 03 07
  Address 0x30: dd ff ff ff ff ff ff ff ff ff ff ff ff ff ff ff
  Address 0x40: ff ff ff ff 01 00 00 00 00 00 00 00 00 00 00 00
  Address 0x50: 00 00 00 00 00 00 00 00 00 00 00 00 00 00 00 00
  Address 0x60: 00 00 00 00 00 00 ff ff ff ff ff ff ff ff ff ff
  Address 0x70: ff ff ff ff ff ff ff ff ff ff ff ff ff ff ff ff
FPM Board        REV 09   760-044634   ABCA4314          Front Panel Display
 Jedec Code:   0x7fb0            EEPROM Version:    0x02
 P/N:          760-044634        S/N:               ABCA4314
 Assembly ID:  0x0b64            Assembly Version:  01.09
 Date:         03-28-2013        Assembly Flags:    0x00
 Version:      REV 09            CLEI Code:         IPMYA4EJRA
 ID: Front Panel Display         FRU Model Number:  MX2010-CRAFT-S
 Board Information Record:
  Address 0x00: ff ff ff ff ff ff ff ff ff ff ff ff ff ff ff ff
 I2C Hex Data:
  Address 0x00: 7f b0 02 ff 0b 64 01 09 52 45 56 20 30 39 00 00
  Address 0x10: 00 00 00 00 37 36 30 2d 30 34 34 36 33 34 00 00
  Address 0x20: 53 2f 4e 20 41 42 43 41 34 33 31 34 00 1c 03 07
  Address 0x30: dd ff ff ff ff ff ff ff ff ff ff ff ff ff ff ff
  Address 0x40: ff ff ff ff 01 49 50 4d 59 41 34 45 4a 52 41 4d
  Address 0x50: 58 32 30 31 30 2d 43 52 41 46 54 2d 53 00 00 00
  Address 0x60: 00 00 00 00 00 00 41 00 00 ff ff ff ff ff ff ff
  Address 0x70: ff ff ff 93 ff ff ff ff ff ff ff ff ff ff ff ff
PSM 0            REV 01   740-050037   1EDB321015C       DC 52V Power Supply
Module
 Jedec Code:   0x7fb0            EEPROM Version:    0x02
 P/N:          740-050037        S/N:               1EDB321015C
 Assembly ID:  0x0478            Assembly Version:  01.01
 Date:         05-28-2013        Assembly Flags:    0x00
 Version:      REV 01            CLEI Code:         IPUPAKRKAA
 ID: DC 52V Power Supply Module  FRU Model Number:  MX2000-PSM-DC-S
 Board Information Record:
  Address 0x00: ff ff ff ff ff ff ff ff ff ff ff ff ff ff ff ff
 I2C Hex Data:
  Address 0x00: 7f b0 02 ff 04 78 01 01 52 45 56 20 30 31 00 00
  Address 0x10: 00 00 00 00 37 34 30 2d 30 35 30 30 33 37 00 00
  Address 0x20: 31 45 44 42 33 32 31 30 31 35 43 00 00 1c 05 07
  Address 0x30: dd ff ff ff ff ff ff ff ff ff ff ff ff ff ff ff
  Address 0x40: ff ff ff ff 01 49 50 55 50 41 4b 52 4b 41 41 4d
  Address 0x50: 58 32 30 30 30 2d 50 53 4d 2d 44 43 2d 53 00 00
  Address 0x60: 00 00 00 00 00 00 31 30 31 ff ff ff ff ff ff ff
  Address 0x70: ff ff ff 2a 00 00 00 00 00 00 00 00 00 00 00 00
PSM 1            REV 01   740-050037   1EDB321015J       DC 52V Power Supply
Module
 Jedec Code:   0x7fb0            EEPROM Version:    0x02
 P/N:          740-050037        S/N:               1EDB321015J
Assembly ID:  0x0478            Assembly Version:  01.01
```

```
 Date:         05-28-2013        Assembly Flags:    0x00
 Version:      REV 01            CLEI Code:         IPUPAKRKAA
 ID: DC 52V Power Supply Module  FRU Model Number:  MX2000-PSM-DC-S
 Board Information Record:
  Address 0x00: ff ff ff ff ff ff ff ff ff ff ff ff ff ff ff ff
 I2C Hex Data:
  Address 0x00: 7f b0 02 ff 04 78 01 01 52 45 56 20 30 31 00 00
  Address 0x10: 00 00 00 00 37 34 30 2d 30 35 30 30 33 37 00 00
  Address 0x20: 31 45 44 42 33 32 31 30 31 35 4a 00 00 1c 05 07
  Address 0x30: dd ff ff ff ff ff ff ff ff ff ff ff ff ff ff ff
  Address 0x40: ff ff ff ff 01 49 50 55 50 41 4b 52 4b 41 41 4d
  Address 0x50: 58 32 30 30 30 2d 50 53 4d 2d 44 43 2d 53 00 00
  Address 0x60: 00 00 00 00 00 00 31 30 31 ff ff ff ff ff ff ff
  Address 0x70: ff ff ff 2a 00 00 00 00 00 00 00 00 00 00 00 00
PSM 2            REV 01   740-050037   1EDB32000K8       DC 52V Power Supply
Module
 Jedec Code:   0x7fb0            EEPROM Version:    0x02
 P/N:          740-050037        S/N:               1EDB32000K8
 Assembly ID:  0x0478            Assembly Version:  01.01
 Date:         05-23-2013        Assembly Flags:    0x00
 Version:      REV 01            CLEI Code:         IPUPAKRKAA
 ID: DC 52V Power Supply Module  FRU Model Number:  MX2000-PSM-DC-S
 Board Information Record:
  Address 0x00: ff ff ff ff ff ff ff ff ff ff ff ff ff ff ff ff
 I2C Hex Data:
  Address 0x00: 7f b0 02 ff 04 78 01 01 52 45 56 20 30 31 00 00
  Address 0x10: 00 00 00 00 37 34 30 2d 30 35 30 30 33 37 00 00
  Address 0x20: 31 45 44 42 33 32 30 30 30 4b 38 00 00 17 05 07
  Address 0x30: dd ff ff ff ff ff ff ff ff ff ff ff ff ff ff ff
  Address 0x40: ff ff ff ff 01 49 50 55 50 41 4b 52 4b 41 41 4d
  Address 0x50: 58 32 30 30 30 2d 50 53 4d 2d 44 43 2d 53 00 00
  Address 0x60: 00 00 00 00 00 00 31 30 31 ff ff ff ff ff ff ff
  Address 0x70: ff ff ff 2a 00 00 00 00 00 00 00 00 00 00 00 00
PSM 3            REV 01   740-050037   1EDB32101JW       DC 52V Power Supply
Module
 Jedec Code:   0x7fb0            EEPROM Version:    0x02
 P/N:          740-050037        S/N:               1EDB32101JW
 Assembly ID:  0x0478            Assembly Version:  01.01
 Date:         05-30-2013        Assembly Flags:    0x00
 Version:      REV 01            CLEI Code:         IPUPAKRKAA
 ID: DC 52V Power Supply Module  FRU Model Number:  MX2000-PSM-DC-S
 Board Information Record:
  Address 0x00: ff ff ff ff ff ff ff ff ff ff ff ff ff ff ff ff
 I2C Hex Data:
  Address 0x00: 7f b0 02 ff 04 78 01 01 52 45 56 20 30 31 00 00
  Address 0x10: 00 00 00 00 37 34 30 2d 30 35 30 30 33 37 00 00
  Address 0x20: 31 45 44 42 33 32 31 30 31 4a 57 00 00 1e 05 07
  Address 0x30: dd ff ff ff ff ff ff ff ff ff ff ff ff ff ff ff
  Address 0x40: ff ff ff ff 01 49 50 55 50 41 4b 52 4b 41 41 4d
  Address 0x50: 58 32 30 30 30 2d 50 53 4d 2d 44 43 2d 53 00 00
  Address 0x60: 00 00 00 00 00 00 31 30 31 ff ff ff ff ff ff ff
  Address 0x70: ff ff ff 2a 00 00 00 00 00 00 00 00 00 00 00 00
PSM 4            REV 01   740-050037   1EDB321015G       DC 52V Power Supply
Module
 Jedec Code:   0x7fb0            EEPROM Version:    0x02
 P/N:          740-050037        S/N:               1EDB321015G
 Assembly ID:  0x0478            Assembly Version:  01.01
 Date:         05-28-2013        Assembly Flags:    0x00
 Version:      REV 01            CLEI Code:         IPUPAKRKAA
 ID: DC 52V Power Supply Module  FRU Model Number:  MX2000-PSM-DC-S
 Board Information Record:
```

```
  Address 0x00: ff ff ff ff ff ff ff ff ff ff ff ff ff ff ff ff
 I2C Hex Data:
  Address 0x00: 7f b0 02 ff 04 78 01 01 52 45 56 20 30 31 00 00
  Address 0x10: 00 00 00 00 37 34 30 2d 30 35 30 30 33 37 00 00
  Address 0x20: 31 45 44 42 33 32 31 30 31 35 47 00 00 1c 05 07
  Address 0x30: dd ff ff ff ff ff ff ff ff ff ff ff ff ff ff ff
  Address 0x40: ff ff ff ff 01 49 50 55 50 41 4b 52 4b 41 41 4d
  Address 0x50: 58 32 30 30 30 2d 50 53 4d 2d 44 43 2d 53 00 00
  Address 0x60: 00 00 00 00 00 00 31 30 31 ff ff ff ff ff ff ff
  Address 0x70: ff ff ff 2a 00 00 00 00 00 00 00 00 00 00 00 00
PSM 5            REV 01   740-050037   1EDB32101HH       DC 52V Power Supply
Module
 Jedec Code:   0x7fb0            EEPROM Version:    0x02
 P/N:          740-050037        S/N:               1EDB32101HH
 Assembly ID:  0x0478            Assembly Version:  01.01
 Date:         05-30-2013        Assembly Flags:    0x00
 Version:      REV 01            CLEI Code:         IPUPAKRKAA
 ID: DC 52V Power Supply Module  FRU Model Number:  MX2000-PSM-DC-S
 Board Information Record:
  Address 0x00: ff ff ff ff ff ff ff ff ff ff ff ff ff ff ff ff
 I2C Hex Data:
  Address 0x00: 7f b0 02 ff 04 78 01 01 52 45 56 20 30 31 00 00
  Address 0x10: 00 00 00 00 37 34 30 2d 30 35 30 30 33 37 00 00
  Address 0x20: 31 45 44 42 33 32 31 30 31 48 48 00 00 1e 05 07
  Address 0x30: dd ff ff ff ff ff ff ff ff ff ff ff ff ff ff ff
  Address 0x40: ff ff ff ff 01 49 50 55 50 41 4b 52 4b 41 41 4d
  Address 0x50: 58 32 30 30 30 2d 50 53 4d 2d 44 43 2d 53 00 00
  Address 0x60: 00 00 00 00 00 00 31 30 31 ff ff ff ff ff ff ff
  Address 0x70: ff ff ff 2a 00 00 00 00 00 00 00 00 00 00 00 00
PSM 6            REV 01   740-050037   1EDB32101HD       DC 52V Power Supply
Module
 Jedec Code:   0x7fb0            EEPROM Version:    0x02
 P/N:          740-050037        S/N:               1EDB32101HD
 Assembly ID:  0x0478            Assembly Version:  01.01
 Date:         05-30-2013        Assembly Flags:    0x00
 Version:      REV 01            CLEI Code:         IPUPAKRKAA
 ID: DC 52V Power Supply Module  FRU Model Number:  MX2000-PSM-DC-S
 Board Information Record:
  Address 0x00: ff ff ff ff ff ff ff ff ff ff ff ff ff ff ff ff
 I2C Hex Data:
  Address 0x00: 7f b0 02 ff 04 78 01 01 52 45 56 20 30 31 00 00
  Address 0x10: 00 00 00 00 37 34 30 2d 30 35 30 30 33 37 00 00
  Address 0x20: 31 45 44 42 33 32 31 30 31 48 44 00 00 1e 05 07
  Address 0x30: dd ff ff ff ff ff ff ff ff ff ff ff ff ff ff ff
  Address 0x40: ff ff ff ff 01 49 50 55 50 41 4b 52 4b 41 41 4d
  Address 0x50: 58 32 30 30 30 2d 50 53 4d 2d 44 43 2d 53 00 00
  Address 0x60: 00 00 00 00 00 00 31 30 31 ff ff ff ff ff ff ff
  Address 0x70: ff ff ff 2a 00 00 00 00 00 00 00 00 00 00 00 00
PSM 7            REV 01   740-050037   1EDB321015F       DC 52V Power Supply
Module
 Jedec Code:   0x7fb0            EEPROM Version:    0x02
 P/N:          740-050037        S/N:               1EDB321015F
 Assembly ID:  0x0478            Assembly Version:  01.01
 Date:         05-28-2013        Assembly Flags:    0x00
 Version:      REV 01            CLEI Code:         IPUPAKRKAA
 ID: DC 52V Power Supply Module  FRU Model Number:  MX2000-PSM-DC-S
Board Information Record:
  Address 0x00: ff ff ff ff ff ff ff ff ff ff ff ff ff ff ff ff
 I2C Hex Data:
  Address 0x00: 7f b0 02 ff 04 78 01 01 52 45 56 20 30 31 00 00
  Address 0x10: 00 00 00 00 37 34 30 2d 30 35 30 30 33 37 00 00
```

```
  Address 0x20: 31 45 44 42 33 32 31 30 31 35 46 00 00 1c 05 07
  Address 0x30: dd ff ff ff ff ff ff ff ff ff ff ff ff ff ff ff
  Address 0x40: ff ff ff ff 01 49 50 55 50 41 4b 52 4b 41 41 4d
  Address 0x50: 58 32 30 30 30 2d 50 53 4d 2d 44 43 2d 53 00 00
  Address 0x60: 00 00 00 00 00 00 31 30 31 ff ff ff ff ff ff ff
  Address 0x70: ff ff ff 2a 00 00 00 00 00 00 00 00 00 00 00 00
PSM 8            REV 01   740-050037   1EDB321015B       DC 52V Power Supply
Module
 Jedec Code:   0x7fb0            EEPROM Version:    0x02
 P/N:          740-050037        S/N:               1EDB321015B
 Assembly ID:  0x0478            Assembly Version:  01.01
 Date:         05-28-2013        Assembly Flags:    0x00
 Version:      REV 01            CLEI Code:         IPUPAKRKAA
 ID: DC 52V Power Supply Module  FRU Model Number:  MX2000-PSM-DC-S
 Board Information Record:
  Address 0x00: ff ff ff ff ff ff ff ff ff ff ff ff ff ff ff ff
 I2C Hex Data:
  Address 0x00: 7f b0 02 ff 04 78 01 01 52 45 56 20 30 31 00 00
  Address 0x10: 00 00 00 00 37 34 30 2d 30 35 30 30 33 37 00 00
  Address 0x20: 31 45 44 42 33 32 31 30 31 35 42 00 00 1c 05 07
  Address 0x30: dd ff ff ff ff ff ff ff ff ff ff ff ff ff ff ff
  Address 0x40: ff ff ff ff 01 49 50 55 50 41 4b 52 4b 41 41 4d
  Address 0x50: 58 32 30 30 30 2d 50 53 4d 2d 44 43 2d 53 00 00
  Address 0x60: 00 00 00 00 00 00 31 30 31 ff ff ff ff ff ff ff
  Address 0x70: ff ff ff 2a 00 00 00 00 00 00 00 00 00 00 00 00
PDM 0            REV 03   740-045234   1EFA3220433       DC Power Dist Module
 Jedec Code:   0x7fb0            EEPROM Version:    0x02
 P/N:          740-045234        S/N:               1EFA3220433
 Assembly ID:  0x047b            Assembly Version:  01.03
 Date:         05-30-2013        Assembly Flags:    0x00
 Version:      REV 03            CLEI Code:         IPUPAJSKAA
 ID: DC Power Dist Module        FRU Model Number:  MX2000-PDM-DC-S
 Board Information Record:
  Address 0x00: ff ff ff ff ff ff ff ff ff ff ff ff ff ff ff ff
 I2C Hex Data:
  Address 0x00: 7f b0 02 ff 04 7b 01 03 52 45 56 20 30 33 00 00
  Address 0x10: 00 00 00 00 37 34 30 2d 30 34 35 32 33 34 00 00
  Address 0x20: 31 45 46 41 33 32 32 30 34 33 33 00 00 1e 05 07
  Address 0x30: dd ff ff ff ff ff ff ff ff ff ff ff ff ff ff ff
  Address 0x40: ff ff ff ff 01 49 50 55 50 41 4a 53 4b 41 41 4d
  Address 0x50: 58 32 30 30 30 2d 50 44 4d 2d 44 43 2d 53 00 00
  Address 0x60: 00 00 00 00 00 00 31 30 33 ff ff ff ff ff ff ff
  Address 0x70: ff ff ff 1d 00 00 00 00 00 00 00 00 00 00 00 00
PDM 1            REV 03   740-045234   1EFA3220425       DC Power Dist Module
 Jedec Code:   0x7fb0            EEPROM Version:    0x02
 P/N:          740-045234        S/N:               1EFA3220425
 Assembly ID:  0x047b            Assembly Version:  01.03
 Date:         05-30-2013        Assembly Flags:    0x00
 Version:      REV 03            CLEI Code:         IPUPAJSKAA
 ID: DC Power Dist Module        FRU Model Number:  MX2000-PDM-DC-S
 Board Information Record:
  Address 0x00: ff ff ff ff ff ff ff ff ff ff ff ff ff ff ff ff
..
```

show chassis hardware (MX2020 Router)

```
user@host > show chassis hardware
Hardware inventory:
Item             Version  Part number  Serial number     Description
Chassis                                JN11E2227AFJ      MX2020
Midplane         REV 27   750-040240   ABAB9384          Lower Power Midplane
```



```
Midplane 1       REV 04   711-032386   ABAB9386          Upper Backplane
PMP 1            REV 05   711-032428   ACAJ1579          Upper Power Midplane
PMP 0            REV 04   711-032426   ACAJ1524          Lower Power Midplane
FPM Board        REV 06   760-040242   ABBT8837          Front Panel Display
PSM 0            REV 01   740-045050   1E022240056       DC 52V Power Supply
Module
PSM 1            REV 01   740-045050   1E022240054       DC 52V Power Supply
Module
PSM 2            REV 01   740-045050   1E02224005H       DC 52V Power Supply
Module
PSM 3            REV 01   740-045050   1E022240053       DC 52V Power Supply
Module
PSM 4            REV 01   740-045050   1E02224004K       DC 52V Power Supply
Module
PSM 7            REV 01   740-045050   1E02224006W       DC 52V Power Supply
Module
PSM 8            REV 01   740-045050   1E022240062       DC 52V Power Supply
Module
PSM 9            REV 01   740-045050   1E02224005B       DC 52V Power Supply
Module
PSM 10           REV 01   740-045050   1E02224005A       DC 52V Power Supply
Module
PSM 11           REV 01   740-045050   1E022240052       DC 52V Power Supply
Module
PSM 12           REV 01   740-045050   1E022240051       DC 52V Power Supply
Module
PSM 13           REV 01   740-045050   1E022240058       DC 52V Power Supply
Module
PSM 14           REV 01   740-045050   1E02224004L       DC 52V Power Supply
Module
PSM 15           REV 01   740-045050   1E02224005M       DC 52V Power Supply
Module
PSM 16           REV 01   740-045050   1E02224006S       DC 52V Power Supply
Module
PSM 17           REV 01   740-045050   1E02224005Z       DC 52V Power Supply
Module
PDM 0            REV 01   740-045234   1E012150033       DC Power Dist Module
PDM 1            REV 01   740-045234   1E012150027       DC Power Dist Module
PDM 2            REV 01   740-045234   1E012150028       DC Power Dist Module
PDM 3            REV 01   740-045234   1E012150045       DC Power Dist Module
Routing Engine 0 REV 02   740-041821   9009089704        RE-S-1800x4
Routing Engine 1 REV 02   740-041821   9009094138        RE-S-1800x4
CB 0             REV 14   750-040257   CAAF8430          Control Board
CB 1             REV 08   750-040257   CAAB3482          Control Board
SPMB 0           REV 01   711-041855   ZS2290            PMB Board
SPMB 1           REV 02   711-041855   CAAA6141          PMB Board
SFB 0            REV 03   711-044466   ABBV6789          Switch Fabric Board
SFB 1            REV 05   711-044466   ABBX5666          Switch Fabric Board
SFB 2            REV 05   711-044466   ABBX5678          Switch Fabric Board
SFB 3            REV 05   711-044466   ABBX5687          Switch Fabric Board
SFB 4            REV 05   711-044466   ABBX5609          Switch Fabric Board
SFB 5            REV 05   711-044466   ABBX5675          Switch Fabric Board
SFB 6            REV 03   711-044466   ABBV6805          Switch Fabric Board
SFB 7            REV 05   711-044466   ABBX5701          Switch Fabric Board
FPC 0            REV 30   750-028467   ABBN0284          MPC 3D 16x 10GE
  CPU            REV 10   711-029089   ABBN0507          AMPC PMB
  PIC 0                   BUILTIN      BUILTIN           4x 10GE(LAN) SFP+
    Xcvr 0       REV 01   740-030658   B11E00990         SFP+-10G-USR
    Xcvr 1       REV 01   740-030658   B11E04357         SFP+-10G-USR
    Xcvr 2       REV 01   740-030658   B11F01327         SFP+-10G-USR
    Xcvr 3       REV 01   740-030658   B11E04375         SFP+-10G-USR
```

```
  PIC 1                   BUILTIN      BUILTIN          4x 10GE(LAN) SFP+
    Xcvr 0       REV 01   740-030658   B11E02760        SFP+-10G-USR
    Xcvr 1       REV 01   740-030658   B11E02904        SFP+-10G-USR
    Xcvr 2       REV 01   740-030658   B11E03963        SFP+-10G-USR
    Xcvr 3       REV 01   740-030658   B11E00756        SFP+-10G-USR
  PIC 2                   BUILTIN      BUILTIN          4x 10GE(LAN) SFP+
    Xcvr 0       REV 01   740-030658   B11E04418        SFP+-10G-USR
    Xcvr 1       REV 01   740-030658   B11E01077        SFP+-10G-USR
    Xcvr 2       REV 01   740-030658   B11E01128        SFP+-10G-USR
    Xcvr 3       REV 01   740-030658   B11F01253        SFP+-10G-USR
  PIC 3                   BUILTIN      BUILTIN          4x 10GE(LAN) SFP+
    Xcvr 0       REV 01   740-030658   B11E01140        SFP+-10G-USR
    Xcvr 1       REV 01   740-030658   B11F01626        SFP+-10G-USR
    Xcvr 2       REV 01   740-030658   B11E01075        SFP+-10G-USR
    Xcvr 3       REV 01   740-030658   B11E01177        SFP+-10G-USR
FPC 1            REV 30   750-028467   ABBN0208         MPC 3D 16x 10GE
  CPU            REV 10   711-029089   ABBJ1084         AMPC PMB
  PIC 0                   BUILTIN      BUILTIN          4x 10GE(LAN) SFP+
    Xcvr 0       REV 01   740-030658   B11E04745        SFP+-10G-USR
    Xcvr 1       REV 01   740-030658   B11F01570        SFP+-10G-USR
    Xcvr 2       REV 01   740-030658   B11E04388        SFP+-10G-USR
    Xcvr 3       REV 01   740-030658   B11F01439        SFP+-10G-USR
  PIC 1                   BUILTIN      BUILTIN          4x 10GE(LAN) SFP+
    Xcvr 0       REV 01   740-030658   B11E04739        SFP+-10G-USR
    Xcvr 1       REV 01   740-030658   B11F01869        SFP+-10G-USR
    Xcvr 2       REV 01   740-030658   B11F01675        SFP+-10G-USR
    Xcvr 3       REV 01   740-030658   B11F01901        SFP+-10G-USR
  PIC 2                   BUILTIN      BUILTIN          4x 10GE(LAN) SFP+
    Xcvr 0       REV 01   740-030658   B11F01346        SFP+-10G-USR
    Xcvr 1       REV 01   740-030658   B11F01288        SFP+-10G-USR
    Xcvr 2       REV 01   740-030658   B11F01824        SFP+-10G-USR
    Xcvr 3       REV 01   740-030658   B11E04312        SFP+-10G-USR
  PIC 3                   BUILTIN      BUILTIN          4x 10GE(LAN) SFP+
    Xcvr 0       REV 01   740-030658   B11E02811        SFP+-10G-USR
    Xcvr 1       REV 01   740-030658   B11E03847        SFP+-10G-USR
    Xcvr 2       REV 01   740-030658   B11F01495        SFP+-10G-USR
    Xcvr 3       REV 01   740-030658   B11F01265        SFP+-10G-USR
FPC 2            REV 30   750-028467   ZM5111           MPC 3D 16x 10GE
  CPU            REV 10   711-029089   ZP6607           AMPC PMB
  PIC 0                   BUILTIN      BUILTIN          4x 10GE(LAN) SFP+
    Xcvr 0       REV 01   740-031980   AK80LJA          SFP+-10G-SR
    Xcvr 1       REV 01   740-031980   AK80MFZ          SFP+-10G-SR
    Xcvr 2       REV 01   740-031980   AK80NKL          SFP+-10G-SR
    Xcvr 3       REV 01   740-031980   AK80KF4          SFP+-10G-SR
  PIC 1                   BUILTIN      BUILTIN          4x 10GE(LAN) SFP+
    Xcvr 0       REV 01   740-031980   AK80FBJ          SFP+-10G-SR
    Xcvr 1       REV 01   740-031980   AK80MM2          SFP+-10G-SR
    Xcvr 2       REV 01   740-031980   AK80LJV          SFP+-10G-SR
    Xcvr 3       REV 01   740-031980   AK80NXV          SFP+-10G-SR
  PIC 2                   BUILTIN      BUILTIN          4x 10GE(LAN) SFP+
    Xcvr 0       REV 01   740-031980   AK80N1H          SFP+-10G-SR
    Xcvr 1       REV 01   740-031980   AK80NLS          SFP+-10G-SR
    Xcvr 2       REV 01   740-031980   AK80FL5          SFP+-10G-SR
    Xcvr 3       REV 01   740-031980   AK80NL9          SFP+-10G-SR
  PIC 3                   BUILTIN      BUILTIN          4x 10GE(LAN) SFP+
    Xcvr 0       REV 01   740-031980   AK80NG2          SFP+-10G-SR
    Xcvr 1       REV 01   740-031980   AK80KDU          SFP+-10G-SR
    Xcvr 2       REV 01   740-031980   AK80MG1          SFP+-10G-SR
    Xcvr 3       REV 01   740-031980   AK80MM0          SFP+-10G-SR
FPC 3            REV 30   750-028467   ABBN0302         MPC 3D 16x 10GE
  CPU            REV 10   711-029089   ABBN0495         AMPC PMB
```



```
  PIC 0                   BUILTIN      BUILTIN          4x 10GE(LAN) SFP+
    Xcvr 0       REV 01   740-030658   B11F01581        SFP+-10G-USR
    Xcvr 1       REV 01   740-030658   B11E01176        SFP+-10G-USR
    Xcvr 2       REV 01   740-030658   B11F01251        SFP+-10G-USR
    Xcvr 3       REV 01   740-030658   B11E02752        SFP+-10G-USR
  PIC 1                   BUILTIN      BUILTIN          4x 10GE(LAN) SFP+
    Xcvr 0       REV 01   740-030658   B11E00786        SFP+-10G-USR
    Xcvr 1       REV 01   740-030658   B11E01020        SFP+-10G-USR
    Xcvr 2       REV 01   740-030658   B11E01023        SFP+-10G-USR
    Xcvr 3       REV 01   740-030658   B11E02819        SFP+-10G-USR
  PIC 2                   BUILTIN      BUILTIN          4x 10GE(LAN) SFP+
    Xcvr 0       REV 01   740-030658   B11E02812        SFP+-10G-USR
    Xcvr 1       REV 01   740-030658   B11D04437        SFP+-10G-USR
    Xcvr 2       REV 01   740-030658   B11F01279        SFP+-10G-USR
    Xcvr 3       REV 01   740-030658   B11F01333        SFP+-10G-USR
  PIC 3                   BUILTIN      BUILTIN          4x 10GE(LAN) SFP+
    Xcvr 0       REV 01   740-030658   B11E00978        SFP+-10G-USR
    Xcvr 1       REV 01   740-030658   B11E01018        SFP+-10G-USR
    Xcvr 2       REV 01   740-030658   B11F01784        SFP+-10G-USR
    Xcvr 3       REV 01   740-031980   AK80NKP          SFP+-10G-SR
FPC 4            REV 30   750-028467   ABBN0308         MPC 3D 16x 10GE
  CPU            REV 10   711-029089   ABBJ1095         AMPC PMB
  PIC 0                   BUILTIN      BUILTIN          4x 10GE(LAN) SFP+
    Xcvr 0       REV 01   740-030658   B11E04305        SFP+-10G-USR
    Xcvr 1       REV 01   740-030658   B11E01147        SFP+-10G-USR
    Xcvr 2       REV 01   740-030658   B11E01195        SFP+-10G-USR
    Xcvr 3       REV 01   740-030658   B11F01743        SFP+-10G-USR
  PIC 1                   BUILTIN      BUILTIN          4x 10GE(LAN) SFP+
    Xcvr 0       REV 01   740-030658   B11F01892        SFP+-10G-USR
    Xcvr 1       REV 01   740-030658   B11E02880        SFP+-10G-USR
    Xcvr 2       REV 01   740-030658   B11E00725        SFP+-10G-USR
    Xcvr 3       REV 01   740-030658   B11E01057        SFP+-10G-USR
  PIC 2                   BUILTIN      BUILTIN          4x 10GE(LAN) SFP+
    Xcvr 0       REV 01   740-030658   B11E02816        SFP+-10G-USR
    Xcvr 1       REV 01   740-030658   B11C04501        SFP+-10G-USR
    Xcvr 2       REV 01   740-030658   B11E02764        SFP+-10G-USR
    Xcvr 3       REV 01   740-030658   B11E00789        SFP+-10G-USR
  PIC 3                   BUILTIN      BUILTIN          4x 10GE(LAN) SFP+
    Xcvr 0       REV 01   740-030658   B11F01250        SFP+-10G-USR
    Xcvr 1       REV 01   740-030658   B11E02847        SFP+-10G-USR
    Xcvr 2       REV 01   740-030658   B11E00787        SFP+-10G-USR
    Xcvr 3       REV 01   740-030658   B11E03803        SFP+-10G-USR
FPC 5            REV 30   750-028467   ABBN0316         MPC 3D 16x 10GE
  CPU            REV 10   711-029089   ABBJ1082         AMPC PMB
  PIC 0                   BUILTIN      BUILTIN          4x 10GE(LAN) SFP+
    Xcvr 0       REV 01   740-031980   B11K00523        SFP+-10G-SR
    Xcvr 1       REV 01   740-031980   B11K01848        SFP+-10G-SR
    Xcvr 2       REV 01   740-031980   B11K01865        SFP+-10G-SR
    Xcvr 3       REV 01   740-031980   B11K00540        SFP+-10G-SR
  PIC 1                   BUILTIN      BUILTIN          4x 10GE(LAN) SFP+
    Xcvr 0       REV 01   740-031980   B11K00422        SFP+-10G-SR
    Xcvr 1       REV 01   740-031980   B11K00428        SFP+-10G-SR
    Xcvr 2       REV 01   740-031980   B11K00423        SFP+-10G-SR
    Xcvr 3       REV 01   740-031980   B11K01855        SFP+-10G-SR
  PIC 2                   BUILTIN      BUILTIN          4x 10GE(LAN) SFP+
    Xcvr 0       REV 01   740-031980   B11K01847        SFP+-10G-SR
    Xcvr 1       REV 01   740-031980   B11K00526        SFP+-10G-SR
    Xcvr 2       REV 01   740-031980   B11K00529        SFP+-10G-SR
    Xcvr 3       REV 01   740-031980   B11K00525        SFP+-10G-SR
  PIC 3                   BUILTIN      BUILTIN          4x 10GE(LAN) SFP+
    Xcvr 0       REV 01   740-031980   B11K00425        SFP+-10G-SR
```

```
    Xcvr 1       REV 01   740-031980   B11K00530         SFP+-10G-SR
    Xcvr 2       REV 01   740-031980   B11K01851         SFP+-10G-SR
    Xcvr 3       REV 01   740-031980   B11K00528         SFP+-10G-SR
FPC 6            REV 32   750-028467   ABBN6832          MPC 3D 16x 10GE
  CPU            REV 10   711-029089   ABBK6534          AMPC PMB
  PIC 0                   BUILTIN      BUILTIN           4x 10GE(LAN) SFP+
    Xcvr 0       REV 01   740-031980   AK80MB4           SFP+-10G-SR
    Xcvr 1       REV 01   740-031980   AK80FQ6           SFP+-10G-SR
    Xcvr 2       REV 01   740-031980   AK80N1F           SFP+-10G-SR
    Xcvr 3       REV 01   740-031980   AK80NLQ           SFP+-10G-SR
  PIC 1                   BUILTIN      BUILTIN           4x 10GE(LAN) SFP+
    Xcvr 0       REV 01   740-031980   AK80KDR           SFP+-10G-SR
    Xcvr 1       REV 01   740-031980   AK80FGJ           SFP+-10G-SR
    Xcvr 2       REV 01   740-031980   AK80N5G           SFP+-10G-SR
    Xcvr 3       REV 01   740-031980   AK80KD8           SFP+-10G-SR
  PIC 2                   BUILTIN      BUILTIN           4x 10GE(LAN) SFP+
    Xcvr 0       REV 01   740-031980   AK80LET           SFP+-10G-SR
    Xcvr 1       REV 01   740-031980   AK80N1X           SFP+-10G-SR
    Xcvr 2       REV 01   740-031980   AK80NRF           SFP+-10G-SR
    Xcvr 3       REV 01   740-031980   AK80NL2           SFP+-10G-SR
  PIC 3                   BUILTIN      BUILTIN           4x 10GE(LAN) SFP+
    Xcvr 0       REV 01   740-031980   AK80N3D           SFP+-10G-SR
    Xcvr 1       REV 01   740-031980   AK80MRB           SFP+-10G-SR
    Xcvr 2       REV 01   740-031980   AK80LEQ           SFP+-10G-SR
    Xcvr 3       REV 01   740-031980   AK80LER           SFP+-10G-SR
FPC 7            REV 32   750-028467   ABBN6811          MPC 3D 16x 10GE
  CPU            REV 10   711-029089   ABBN7288          AMPC PMB
  PIC 0                   BUILTIN      BUILTIN           4x 10GE(LAN) SFP+
    Xcvr 0       REV 01   740-031980   AK80NK8           SFP+-10G-SR
    Xcvr 1       REV 01   740-031980   AK80LJG           SFP+-10G-SR
    Xcvr 2       REV 01   740-031980   AK80LBU           SFP+-10G-SR
    Xcvr 3       REV 01   740-031980   AK80N21           SFP+-10G-SR
  PIC 1                   BUILTIN      BUILTIN           4x 10GE(LAN) SFP+
    Xcvr 0       REV 01   740-031980   AK80LEU           SFP+-10G-SR
    Xcvr 1       REV 01   740-031980   AK80NLM           SFP+-10G-SR
    Xcvr 2       REV 01   740-031980   AK80NL6           SFP+-10G-SR
    Xcvr 3       REV 01   740-031980   AK80LES           SFP+-10G-SR
  PIC 2                   BUILTIN      BUILTIN           4x 10GE(LAN) SFP+
    Xcvr 0       REV 01   740-031980   AK80LEN           SFP+-10G-SR
    Xcvr 1       REV 01   740-031980   AK80ME0           SFP+-10G-SR
    Xcvr 2       REV 01   740-031980   AK80LMG           SFP+-10G-SR
    Xcvr 3       REV 01   740-031980   AK80MM1           SFP+-10G-SR
  PIC 3                   BUILTIN      BUILTIN           4x 10GE(LAN) SFP+
    Xcvr 0       REV 01   740-031980   AK80MG7           SFP+-10G-SR
    Xcvr 1       REV 01   740-031980   AK80KF9           SFP+-10G-SR
    Xcvr 2       REV 01   740-031980   AK80NRQ           SFP+-10G-SR
    Xcvr 3       REV 01   740-031980   AK80NLE           SFP+-10G-SR
FPC 8            REV 23   750-028467   YN2977            MPC 3D 16x 10GE
  CPU            REV 10   711-029089   YP1856            AMPC PMB
  PIC 0                   BUILTIN      BUILTIN           4x 10GE(LAN) SFP+
    Xcvr 0       REV 01   740-031980   183363A00875      SFP+-10G-SR
    Xcvr 1       REV 01   740-031980   183363A00851      SFP+-10G-SR
    Xcvr 2       REV 01   740-031980   183363A00772      SFP+-10G-SR
    Xcvr 3       REV 01   740-031980   183363A00882      SFP+-10G-SR
  PIC 1                   BUILTIN      BUILTIN           4x 10GE(LAN) SFP+
    Xcvr 0       REV 01   740-031980   183363A00735      SFP+-10G-SR
    Xcvr 1       REV 01   740-031980   183363A00169      SFP+-10G-SR
    Xcvr 2       REV 01   740-031980   183363A00726      SFP+-10G-SR
    Xcvr 3       REV 01   740-031980   183363A00077      SFP+-10G-SR
  PIC 2                   BUILTIN      BUILTIN           4x 10GE(LAN) SFP+
    Xcvr 0       REV 01   740-031980   183363A00168      SFP+-10G-SR
```

```
    Xcvr 1       REV 01   740-031980   183363A00676      SFP+-10G-SR
    Xcvr 2       REV 01   740-031980   183363A00732      SFP+-10G-SR
    Xcvr 3       REV 01   740-031980   183363A00091      SFP+-10G-SR
  PIC 3                   BUILTIN      BUILTIN           4x 10GE(LAN) SFP+
    Xcvr 0       REV 01   740-031980   183363A00725      SFP+-10G-SR
    Xcvr 1       REV 01   740-031980   183363A00642      SFP+-10G-SR
    Xcvr 2       REV 01   740-031980   183363A00871      SFP+-10G-SR
    Xcvr 3       REV 01   740-031980   183363A00853      SFP+-10G-SR
FPC 9            REV 32   750-028467   ABBN6798          MPC 3D 16x 10GE
  CPU            REV 10   711-029089   ABBK6556          AMPC PMB
  PIC 0                   BUILTIN      BUILTIN           4x 10GE(LAN) SFP+
    Xcvr 0       REV 01   740-021308   9ZDZ06A00055      SFP+-10G-SR
    Xcvr 1       REV 01   740-031980   183363A00239      SFP+-10G-SR
    Xcvr 2       REV 01   740-021308   AD0915E003K       SFP+-10G-SR
    Xcvr 3       REV 01   740-021308   AD0915E003A       SFP+-10G-SR
  PIC 1                   BUILTIN      BUILTIN           4x 10GE(LAN) SFP+
    Xcvr 0       REV 01   740-031980   AK80MRC           SFP+-10G-SR
    Xcvr 1       REV 01   740-031980   AK80NL5           SFP+-10G-SR
    Xcvr 2       REV 01   740-031980   AK80NKN           SFP+-10G-SR
    Xcvr 3       REV 01   740-031980   AK80N3U           SFP+-10G-SR
  PIC 2                   BUILTIN      BUILTIN           4x 10GE(LAN) SFP+
    Xcvr 0       REV 01   740-031980   AK80N1T           SFP+-10G-SR
    Xcvr 1       REV 01   740-031980   AJ808DJ           SFP+-10G-SR
    Xcvr 2       REV 01   740-031980   AK80NG4           SFP+-10G-SR
    Xcvr 3       REV 01   740-031980   AK80FND           SFP+-10G-SR
  PIC 3                   BUILTIN      BUILTIN           4x 10GE(LAN) SFP+
    Xcvr 0       REV 01   740-031980   AK80FKQ           SFP+-10G-SR
    Xcvr 1       REV 01   740-031980   AK80NLT           SFP+-10G-SR
    Xcvr 2       REV 01   740-031980   AK80NKR           SFP+-10G-SR
    Xcvr 3       REV 01   740-031980   AK80LKM           SFP+-10G-SR
FPC 10           REV 32   750-028467   ABBN6813          MPC 3D 16x 10GE
  CPU            REV 10   711-029089   ABBK6542          AMPC PMB
  PIC 0                   BUILTIN      BUILTIN           4x 10GE(LAN) SFP+
    Xcvr 0       REV 01   740-031980   AK80NA3           SFP+-10G-SR
    Xcvr 1       REV 01   740-031980   AK80NLF           SFP+-10G-SR
    Xcvr 2       REV 01   740-031980   AK80MRH           SFP+-10G-SR
    Xcvr 3       REV 01   740-031980   AK80KE4           SFP+-10G-SR
  PIC 1                   BUILTIN      BUILTIN           4x 10GE(LAN) SFP+
    Xcvr 0       REV 01   740-021308   973152A00030      SFP+-10G-SR
    Xcvr 1       REV 01   740-031980   AK80L9H           SFP+-10G-SR
    Xcvr 2       REV 01   740-031980   AK80ME8           SFP+-10G-SR
    Xcvr 3       REV 01   740-031980   AK80NLR           SFP+-10G-SR
  PIC 2                   BUILTIN      BUILTIN           4x 10GE(LAN) SFP+
    Xcvr 0       REV 01   740-031980   AK80NG1           SFP+-10G-SR
    Xcvr 1       REV 01   740-031980   AK80MCA           SFP+-10G-SR
    Xcvr 2       REV 01   740-031980   AK80LFC           SFP+-10G-SR
    Xcvr 3       REV 01   740-031980   AK80LEM           SFP+-10G-SR
  PIC 3                   BUILTIN      BUILTIN           4x 10GE(LAN) SFP+
    Xcvr 0       REV 01   740-031980   AK80N9X           SFP+-10G-SR
    Xcvr 1       REV 01   740-031980   AK80LAC           SFP+-10G-SR
    Xcvr 2       REV 01   740-031980   AK80LF2           SFP+-10G-SR
    Xcvr 3       REV 01   740-031980   AK80N8T           SFP+-10G-SR
FPC 11           REV 30   750-028467   ABBN0281          MPC 3D 16x 10GE
  CPU            REV 10   711-029089   ABBN0526          AMPC PMB
  PIC 0                   BUILTIN      BUILTIN           4x 10GE(LAN) SFP+
    Xcvr 0       REV 01   740-030658   B11F01326         SFP+-10G-USR
    Xcvr 1       REV 01   740-030658   B11E03973         SFP+-10G-USR
    Xcvr 2       REV 01   740-030658   B11E00950         SFP+-10G-USR
    Xcvr 3       REV 01   740-030658   B11E00674         SFP+-10G-USR
  PIC 1                   BUILTIN      BUILTIN           4x 10GE(LAN) SFP+
    Xcvr 0       REV 01   740-030658   B11E00775         SFP+-10G-USR
```

```
    Xcvr 1       REV 01   740-030658   B11E04461         SFP+-10G-USR
    Xcvr 2       REV 01   740-030658   B11E01074         SFP+-10G-USR
    Xcvr 3       REV 01   740-030658   B11E02821         SFP+-10G-USR
  PIC 2                   BUILTIN      BUILTIN           4x 10GE(LAN) SFP+
    Xcvr 0       REV 01   740-030658   B11E04501         SFP+-10G-USR
    Xcvr 1       REV 01   740-030658   B11E00757         SFP+-10G-USR
    Xcvr 2       REV 01   740-030658   B11F01623         SFP+-10G-USR
    Xcvr 3       REV 01   740-030658   B11E01022         SFP+-10G-USR
  PIC 3                   BUILTIN      BUILTIN           4x 10GE(LAN) SFP+
    Xcvr 0       REV 01   740-030658   B11E04359         SFP+-10G-USR
    Xcvr 1       REV 01   740-030658   B11E02751         SFP+-10G-USR
    Xcvr 2       REV 01   740-030658   B11E02736         SFP+-10G-USR
    Xcvr 3       REV 01   740-030658   B11E01178         SFP+-10G-USR
FPC 12           REV 32   750-028467   ABBN6796          MPC 3D 16x 10GE
  CPU            REV 10   711-029089   ABBN7259          AMPC PMB
  PIC 0                   BUILTIN      BUILTIN           4x 10GE(LAN) SFP+
    Xcvr 0       REV 01   740-031980   B11K01856         SFP+-10G-SR
    Xcvr 1       REV 01   740-031980   B11K01853         SFP+-10G-SR
    Xcvr 2       REV 01   740-031980   B11K01863         SFP+-10G-SR
    Xcvr 3       REV 01   740-031980   163363A02863      SFP+-10G-SR
  PIC 1                   BUILTIN      BUILTIN           4x 10GE(LAN) SFP+
    Xcvr 0       REV 01   740-031980   163363A02668      SFP+-10G-SR
    Xcvr 1       REV 01   740-031980   163363A02881      SFP+-10G-SR
    Xcvr 2       REV 01   740-031980   163363A01671      SFP+-10G-SR
    Xcvr 3       REV 01   740-031980   163363A02627      SFP+-10G-SR
  PIC 2                   BUILTIN      BUILTIN           4x 10GE(LAN) SFP+
    Xcvr 0       REV 01   740-031980   163363A02725      SFP+-10G-SR
    Xcvr 1       REV 01   740-031980   163363A02692      SFP+-10G-SR
    Xcvr 2       REV 01   740-031980   163363A02730      SFP+-10G-SR
    Xcvr 3       REV 01   740-031980   163363A03081      SFP+-10G-SR
  PIC 3                   BUILTIN      BUILTIN           4x 10GE(LAN) SFP+
    Xcvr 0       REV 01   740-031980   163363A02736      SFP+-10G-SR
    Xcvr 1       REV 01   740-031980   163363A02568      SFP+-10G-SR
    Xcvr 2       REV 01   740-031980   163363A02747      SFP+-10G-SR
    Xcvr 3       REV 01   740-031980   163363A02579      SFP+-10G-SR
FPC 13           REV 30   750-028467   ABBN0270          MPC 3D 16x 10GE
  CPU            REV 10   711-029089   ABBJ0966          AMPC PMB
  PIC 0                   BUILTIN      BUILTIN           4x 10GE(LAN) SFP+
    Xcvr 0       REV 01   740-031980   AK80NL1           SFP+-10G-SR
    Xcvr 1       REV 01   740-031980   AK80NXW           SFP+-10G-SR
    Xcvr 2       REV 01   740-031980   AK80KD2           SFP+-10G-SR
    Xcvr 3       REV 01   740-031980   AK80FMD           SFP+-10G-SR
  PIC 1                   BUILTIN      BUILTIN           4x 10GE(LAN) SFP+
    Xcvr 0       REV 01   740-031980   AK80NKQ           SFP+-10G-SR
    Xcvr 1       REV 01   740-031980   AK80MGH           SFP+-10G-SR
    Xcvr 2       REV 01   740-031980   AK80N38           SFP+-10G-SR
    Xcvr 3       REV 01   740-031980   AK80NL7           SFP+-10G-SR
  PIC 2                   BUILTIN      BUILTIN           4x 10GE(LAN) SFP+
    Xcvr 0       REV 01   740-031980   AK80LEL           SFP+-10G-SR
    Xcvr 1       REV 01   740-031980   AK80NKD           SFP+-10G-SR
    Xcvr 2       REV 01   740-031980   AK80KCY           SFP+-10G-SR
    Xcvr 3       REV 01   740-031980   AK80LHK           SFP+-10G-SR
  PIC 3                   BUILTIN      BUILTIN           4x 10GE(LAN) SFP+
    Xcvr 0       REV 01   740-031980   AK80M5J           SFP+-10G-SR
    Xcvr 1       REV 01   740-031980   AK80MBE           SFP+-10G-SR
    Xcvr 2       REV 01   740-031980   AK80NLG           SFP+-10G-SR
    Xcvr 3       REV 01   740-031980   AK80LFH           SFP+-10G-SR
FPC 14           REV 32   750-028467   ABBN6790          MPC 3D 16x 10GE
  CPU            REV 10   711-029089   ABBK6515          AMPC PMB
  PIC 0                   BUILTIN      BUILTIN           4x 10GE(LAN) SFP+
    Xcvr 0       REV 01   740-031980   AK80LZM           SFP+-10G-SR
```

```
    Xcvr 1       REV 01   740-031980   AK80MCC          SFP+-10G-SR
    Xcvr 2       REV 01   740-031980   AK80KCM          SFP+-10G-SR
    Xcvr 3       REV 01   740-031980   AK80KE0          SFP+-10G-SR
  PIC 1                   BUILTIN      BUILTIN          4x 10GE(LAN) SFP+
    Xcvr 0       REV 01   740-021310   C10F99155        SFP+-10G-LRM
    Xcvr 1       REV 01   740-021310   C10F99049        SFP+-10G-LRM
    Xcvr 2       REV 01   740-021310   C10F99128        SFP+-10G-LRM
    Xcvr 3       REV 01   740-021310   C10F99169        SFP+-10G-LRM
  PIC 2                   BUILTIN      BUILTIN          4x 10GE(LAN) SFP+
    Xcvr 0       REV 01   740-031980   AK80LF3          SFP+-10G-SR
    Xcvr 1       REV 01   740-031980   163363A02597     SFP+-10G-SR
    Xcvr 2       REV 01   740-031980   163363A03060     SFP+-10G-SR
    Xcvr 3       REV 01   740-031980   163363A03057     SFP+-10G-SR
  PIC 3                   BUILTIN      BUILTIN          4x 10GE(LAN) SFP+
    Xcvr 0       REV 01   740-031980   AK80LEX          SFP+-10G-SR
    Xcvr 1       REV 01   740-031980   AK80FEU          SFP+-10G-SR
    Xcvr 2       REV 01   740-031980   AK80FNM          SFP+-10G-SR
    Xcvr 3       REV 01   740-021308   AJQ0Q5G          SFP+-10G-SR
FPC 15           REV 32   750-028467   ABBN6791         MPC 3D 16x 10GE
  CPU            REV 10   711-029089   ABBN7289         AMPC PMB
  PIC 0                   BUILTIN      BUILTIN          4x 10GE(LAN) SFP+
    Xcvr 0       REV 01   740-031980   B11K00424        SFP+-10G-SR
    Xcvr 1       REV 01   740-031980   B11K01849        SFP+-10G-SR
    Xcvr 2       REV 01   740-031980   B11K01862        SFP+-10G-SR
    Xcvr 3       REV 01   740-031980   B11K01852        SFP+-10G-SR
  PIC 1                   BUILTIN      BUILTIN          4x 10GE(LAN) SFP+
    Xcvr 0       REV 01   740-031980   B11K00427        SFP+-10G-SR
    Xcvr 1       REV 01   740-031980   B11K00430        SFP+-10G-SR
    Xcvr 2       REV 01   740-031980   B11K01854        SFP+-10G-SR
    Xcvr 3       REV 01   740-031980   B11K00426        SFP+-10G-SR
  PIC 2                   BUILTIN      BUILTIN          4x 10GE(LAN) SFP+
    Xcvr 0       REV 01   740-031980   B11K00429        SFP+-10G-SR
    Xcvr 1       REV 01   740-031980   B11K01864        SFP+-10G-SR
    Xcvr 2       REV 01   740-031980   B11K01850        SFP+-10G-SR
    Xcvr 3       REV 01   740-031980   B11K00522        SFP+-10G-SR
  PIC 3                   BUILTIN      BUILTIN          4x 10GE(LAN) SFP+
    Xcvr 0       REV 01   740-030658   B11E01144        SFP+-10G-USR
    Xcvr 1       REV 01   740-030658   B11E00985        SFP+-10G-USR
    Xcvr 2       REV 01   740-030658   B11E00796        SFP+-10G-USR
    Xcvr 3       REV 01   740-031980   B11K01866        SFP+-10G-SR
FPC 16           REV 30   750-028467   ABBM4592         MPC 3D 16x 10GE
  CPU            REV 10   711-029089   ABBN0465         AMPC PMB
  PIC 0                   BUILTIN      BUILTIN          4x 10GE(LAN) SFP+
    Xcvr 0       REV 01   740-030658   B11F01435        SFP+-10G-USR
    Xcvr 1       REV 01   740-030658   B11E01052        SFP+-10G-USR
    Xcvr 2       REV 01   740-030658   B11F01328        SFP+-10G-USR
    Xcvr 3       REV 01   740-030658   B11F01254        SFP+-10G-USR
  PIC 1                   BUILTIN      BUILTIN          4x 10GE(LAN) SFP+
    Xcvr 0       REV 01   740-030658   B11E02738        SFP+-10G-USR
    Xcvr 1       REV 01   740-030658   B11E02881        SFP+-10G-USR
    Xcvr 2       REV 01   740-030658   B11F01624        SFP+-10G-USR
    Xcvr 3       REV 01   740-030658   B11E00889        SFP+-10G-USR
  PIC 2                   BUILTIN      BUILTIN          4x 10GE(LAN) SFP+
    Xcvr 0       REV 01   740-030658   B11E02883        SFP+-10G-USR
    Xcvr 1       REV 01   740-030658   B11E00681        SFP+-10G-USR
    Xcvr 2       REV 01   740-030658   B11E04306        SFP+-10G-USR
    Xcvr 3       REV 01   740-030658   B11E02813        SFP+-10G-USR
  PIC 3                   BUILTIN      BUILTIN          4x 10GE(LAN) SFP+
    Xcvr 0       REV 01   740-030658   B11F01801        SFP+-10G-USR
    Xcvr 1       REV 01   740-030658   B11E02753        SFP+-10G-USR
    Xcvr 2       REV 01   740-030658   B11E01156        SFP+-10G-USR
```

```
    Xcvr 3       REV 01   740-030658   B11E04324         SFP+-10G-USR
FPC 17           REV 32   750-028467   ABBN6810          MPC 3D 16x 10GE
  CPU            REV 10   711-029089   ABBN7237          AMPC PMB
  PIC 0                   BUILTIN      BUILTIN           4x 10GE(LAN) SFP+
    Xcvr 0       REV 01   740-031980   163363A02638      SFP+-10G-SR
    Xcvr 1       REV 01   740-031980   163363A02082      SFP+-10G-SR
    Xcvr 2       REV 01   740-031980   163363A01674      SFP+-10G-SR
    Xcvr 3       REV 01   740-031980   163363A03058      SFP+-10G-SR
  PIC 1                   BUILTIN      BUILTIN           4x 10GE(LAN) SFP+
    Xcvr 0       REV 01   740-031980   163363A03048      SFP+-10G-SR
    Xcvr 1       REV 01   740-031980   163363A02729      SFP+-10G-SR
    Xcvr 2       REV 01   740-031980   163363A02566      SFP+-10G-SR
    Xcvr 3       REV 01   740-031980   163363A02567      SFP+-10G-SR
  PIC 2                   BUILTIN      BUILTIN           4x 10GE(LAN) SFP+
    Xcvr 0       REV 01   740-031980   163363A02878      SFP+-10G-SR
    Xcvr 1       REV 01   740-031980   163363A02739      SFP+-10G-SR
    Xcvr 2       REV 01   740-031980   163363A01959      SFP+-10G-SR
    Xcvr 3       REV 01   740-031980   163363A02660      SFP+-10G-SR
  PIC 3                   BUILTIN      BUILTIN           4x 10GE(LAN) SFP+
    Xcvr 0       REV 01   740-031980   163363A02731      SFP+-10G-SR
    Xcvr 1       REV 01   740-031980   163363A02588      SFP+-10G-SR
    Xcvr 2       REV 01   740-031980   163363A02673      SFP+-10G-SR
    Xcvr 3       REV 01   740-031980   163363A02654      SFP+-10G-SR
FPC 18           REV 30   750-028467   ABBM4739          MPC 3D 16x 10GE
  CPU            REV 10   711-029089   ABBN0487          AMPC PMB
  PIC 0                   BUILTIN      BUILTIN           4x 10GE(LAN) SFP+
    Xcvr 0       REV 01   740-031980   163363A02569      SFP+-10G-SR
    Xcvr 1       REV 01   740-031980   163363A02886      SFP+-10G-SR
    Xcvr 2       REV 01   740-031980   163363A03082      SFP+-10G-SR
    Xcvr 3       REV 01   740-031980   133363A00297      SFP+-10G-SR
  PIC 1                   BUILTIN      BUILTIN           4x 10GE(LAN) SFP+
    Xcvr 0       REV 01   740-031980   163363A02726      SFP+-10G-SR
    Xcvr 1       REV 01   740-031980   163363A03050      SFP+-10G-SR
    Xcvr 2       REV 01   740-031980   163363A02884      SFP+-10G-SR
    Xcvr 3       REV 01   740-031980   163363A03076      SFP+-10G-SR
  PIC 2                   BUILTIN      BUILTIN           4x 10GE(LAN) SFP+
    Xcvr 0       REV 01   740-031980   163363A02581      SFP+-10G-SR
    Xcvr 1       REV 01   740-031980   163363A02873      SFP+-10G-SR
    Xcvr 2       REV 01   740-031980   163363A02582      SFP+-10G-SR
    Xcvr 3       REV 01   740-031980   163363A03083      SFP+-10G-SR
  PIC 3                   BUILTIN      BUILTIN           4x 10GE(LAN) SFP+
    Xcvr 0       REV 01   740-031981   UL70BU6           SFP+-10G-LR
    Xcvr 1       REV 01   740-031981   UL50QC6           SFP+-10G-LR
    Xcvr 2       REV 01   740-031981   UL708N6           SFP+-10G-LR
    Xcvr 3       REV 01   740-031981   UL603KK           SFP+-10G-LR
FPC 19           REV 32   750-028467   ABBN6827          MPC 3D 16x 10GE
  CPU            REV 10   711-029089   ABBK6508          AMPC PMB
  PIC 0                   BUILTIN      BUILTIN           4x 10GE(LAN) SFP+
    Xcvr 0       REV 01   740-031980   163363A01688      SFP+-10G-SR
    Xcvr 1       REV 01   740-031980   163363A01724      SFP+-10G-SR
    Xcvr 2       REV 01   740-031980   163363A01773      SFP+-10G-SR
    Xcvr 3       REV 01   740-031980   163363A02593      SFP+-10G-SR
  PIC 1                   BUILTIN      BUILTIN           4x 10GE(LAN) SFP+
    Xcvr 0       REV 01   740-031980   163363A03061      SFP+-10G-SR
    Xcvr 1       REV 01   740-031980   163363A03056      SFP+-10G-SR
    Xcvr 2       REV 01   740-031980   163363A02669      SFP+-10G-SR
    Xcvr 3       REV 01   740-031980   163363A03070      SFP+-10G-SR
  PIC 2                   BUILTIN      BUILTIN           4x 10GE(LAN) SFP+
    Xcvr 0       REV 01   740-031980   163363A02572      SFP+-10G-SR
    Xcvr 1       REV 01   740-031980   163363A02697      SFP+-10G-SR
    Xcvr 2       REV 01   740-031980   163363A02585      SFP+-10G-SR
```

```
    Xcvr 3       REV 01   740-031980   163363A03052      SFP+-10G-SR
  PIC 3                   BUILTIN      BUILTIN           4x 10GE(LAN) SFP+
    Xcvr 0       REV 01   740-031980   163363A02591      SFP+-10G-SR
    Xcvr 1       REV 01   740-031980   163363A02649      SFP+-10G-SR
    Xcvr 2       REV 01   740-031980   163363A02577      SFP+-10G-SR
    Xcvr 3       REV 01   740-031980   163363A02698      SFP+-10G-SR
ADC 0            REV 13   750-043596   ABBX5561          Adapter Card
ADC 1            REV 13   750-043596   ABBX5546          Adapter Card
ADC 2            REV 13   750-043596   ABBX5535          Adapter Card
ADC 3            REV 13   750-043596   ABBX5552          Adapter Card
ADC 4            REV 13   750-043596   ABBX5581          Adapter Card
ADC 5            REV 13   750-043596   ABBX5545          Adapter Card
ADC 6            REV 13   750-043596   ABBX5554          Adapter Card
ADC 7            REV 07   750-043596   ABBV7194          Adapter Card
ADC 8            REV 07   750-043596   ABBV7251          Adapter Card
ADC 9            REV 07   750-043596   ABBV7202          Adapter Card
ADC 10           REV 13   750-043596   ABBX5538          Adapter Card
ADC 11           REV 13   750-043596   ABBX5566          Adapter Card
ADC 12           REV 13   750-043596   ABBX5542          Adapter Card
ADC 13           REV 13   750-043596   ABBX5539          Adapter Card
ADC 14           REV 13   750-043596   ABBX5555          Adapter Card
ADC 15           REV 13   750-043596   ABBX5557          Adapter Card
ADC 16           REV 13   750-043596   ABBX5536          Adapter Card
ADC 17           REV 13   750-043596   ABBX5559          Adapter Card
ADC 18           REV 13   750-043596   ABBX5537          Adapter Card
ADC 19           REV 11   750-043596   ABBW5685          Adapter Card
Fan Tray 0       REV 2A   760-046960   ACAY0030          172mm FanTray - 6 Fans
Fan Tray 1       REV 2A   760-046960   ACAY0039          172mm FanTray - 6 Fans
Fan Tray 2       REV 2A   760-046960   ACAY0033          172mm FanTray - 6 Fans
Fan Tray 3       REV 2A   760-046960   ACAY0062          172mm FanTray - 6 Fans
```

show chassis hardware detail (MX2020 Router)

```
user@host> show chassis hardware detail
Hardware inventory:
Item             Version  Part number  Serial number     Description
Chassis                                JN11E2227AFJ      MX2020
Midplane         REV 27   750-040240   ABAB9384          Lower Power Midplane
Midplane 1       REV 04   711-032386   ABAB9386          Upper Backplane
PMP 1            REV 05   711-032428   ACAJ1821          Upper Power Midplane
PMP 0            REV 04   711-032426   ACAJ1524          Lower Power Midplane
FPM Board        REV 06   760-040242   ABBT8837          Front Panel Display
PSM 0            REV 01   740-045050   1E02224006G       DC 52V Power Supply
Module
PSM 1            REV 01   740-045050   1E022240053       DC 52V Power Supply
Module
PSM 2            REV 01   740-045050   1E02224004K       DC 52V Power Supply
Module
PSM 3            REV 01   740-045050   1E022240056       DC 52V Power Supply
Module
PSM 4            REV 01   740-045050   1E022240054       DC 52V Power Supply
Module
PSM 5            REV 01   740-045050   1E02224005H       DC 52V Power Supply
Module
PSM 6            REV 01   740-045050   1E02224006S       DC 52V Power Supply
Module
PSM 7            REV 01   740-045050   1E02224005M       DC 52V Power Supply
Module
PSM 8            REV 01   740-045050   1E022240062       DC 52V Power Supply
Module
PSM 9            REV 03   740-045050   1EDB2350095       DC 52V Power Supply
```

```
Module
PSM 10           REV 03   740-045050   1EDB235009L       DC 52V Power Supply
Module
PSM 11           REV 03   740-045050   1EDB2350092       DC 52V Power Supply
Module
PSM 12           REV 03   740-045050   1EDB23500AT       DC 52V Power Supply
Module
PSM 13           REV 03   740-045050   1EDB2350094       DC 52V Power Supply
Module
PSM 15           REV 03   740-045050   1EDB235008X       DC 52V Power Supply
Module
PDM 0            REV 01   740-045234   1E012150033       DC Power Dist Module
PDM 1            REV 01   740-045234   1E012150027       DC Power Dist Module
PDM 2            REV 01   740-045234   1E262250072       DC Power Dist Module
Routing Engine 0 REV 02   740-041821   9009094138        RE-S-1800x4
  ad0    3998 MB  Virtium - TuffDisk VCF3 20110825A021D0000064 Compact Flash
  ad1   30533 MB  UGB94ARF32H0S3-KC    UNIGEN-499551-000347 Disk 1
  usb0 (addr 1)  EHCI root hub 0       Intel             uhub0
  usb0 (addr 2)  product 0x0020 32     vendor 0x8087     uhub1
  DIMM 0         SGU04G72H1BD2SA-BB DIE REV-52 PCB REV-54 MFR ID-ce80
  DIMM 1         SGU04G72H1BD2SA-BB DIE REV-52 PCB REV-54 MFR ID-ce80
  DIMM 2         SGU04G72H1BD2SA-BB DIE REV-52 PCB REV-54 MFR ID-ce80
  DIMM 3         SGU04G72H1BD2SA-BB DIE REV-52 PCB REV-54 MFR ID-ce80
Routing Engine 1 REV 02   740-041821   9009089709        RE-S-1800x4
  ad0    3831 MB  UGB30SFA4000T1       SFA4000T1 00000113 Compact Flash
  ad1   30533 MB  UGB94ARF32H0S3-KC    UNIGEN-478612-001044 Disk 1
CB 0             REV 08   750-040257   CAAB3482          Control Board
CB 1             REV 04   750-040257   ZT2864            Control Board
SPMB 0           REV 02   711-041855   CAAA6141          PMB Board
SPMB 1           REV 01   711-041855   ZS2275            PMB Board
SFB 0            REV 05   711-044466   ABBT2161          Switch Fabric Board
SFB 1            REV 05   711-044466   ABBT2159          Switch Fabric Board
SFB 2            REV 05   711-044466   ABBX3718          Switch Fabric Board
SFB 3            REV 05   711-044466   ABBT2152          Switch Fabric Board
SFB 4            REV 05   711-044466   ABBT2160          Switch Fabric Board
SFB 5            REV 05   711-044466   ABBT2145          Switch Fabric Board
SFB 6            REV 05   711-044466   ABBT2150          Switch Fabric Board
SFB 7            REV 05   711-044466   ABBT2163          Switch Fabric Board
FPC 0            REV 30   750-028467   ABBN0284          MPC 3D 16x 10GE
  CPU            REV 10   711-029089   ABBN0507          AMPC PMB
  PIC 0                   BUILTIN      BUILTIN           4x 10GE(LAN) SFP+
    Xcvr 0       REV 01   740-030658   B11E00990         SFP+-10G-USR
    Xcvr 1       REV 01   740-030658   B11E04357         SFP+-10G-USR
    Xcvr 2       REV 01   740-030658   B11F01327         SFP+-10G-USR
Xcvr 3       REV 01   740-030658   B11E04375         SFP+-10G-USR
  PIC 1                   BUILTIN      BUILTIN           4x 10GE(LAN) SFP+
    Xcvr 0       REV 01   740-030658   B11E02760         SFP+-10G-USR
    Xcvr 1       REV 01   740-030658   B11E02904         SFP+-10G-USR
    Xcvr 2       REV 01   740-030658   B11E03963         SFP+-10G-USR
    Xcvr 3       REV 01   740-030658   B11E00756         SFP+-10G-USR
  PIC 2                   BUILTIN      BUILTIN           4x 10GE(LAN) SFP+
    Xcvr 0       REV 01   740-030658   B11E04418         SFP+-10G-USR
    Xcvr 1       REV 01   740-030658   B11E01077         SFP+-10G-USR
    Xcvr 2       REV 01   740-030658   B11E01128         SFP+-10G-USR
    Xcvr 3       REV 01   740-030658   B11F01253         SFP+-10G-USR
  PIC 3                   BUILTIN      BUILTIN           4x 10GE(LAN) SFP+
    Xcvr 0       REV 01   740-030658   B11E01140         SFP+-10G-USR
    Xcvr 1       REV 01   740-030658   B11F01626         SFP+-10G-USR
    Xcvr 2       REV 01   740-030658   B11E01075         SFP+-10G-USR
    Xcvr 3       REV 01   740-030658   B11E01177         SFP+-10G-USR
FPC 1            REV 30   750-028467   ABBN0308          MPC 3D 16x 10GE
```

```
  CPU            REV 10   711-029089   ABBJ1095          AMPC PMB
  PIC 0                   BUILTIN      BUILTIN           4x 10GE(LAN) SFP+
    Xcvr 0       REV 01   740-030658   B11E04305         SFP+-10G-USR
    Xcvr 1       REV 01   740-030658   B11E01147         SFP+-10G-USR
    Xcvr 2       REV 01   740-030658   B11E01195         SFP+-10G-USR
    Xcvr 3       REV 01   740-030658   B11F01743         SFP+-10G-USR
  PIC 1                   BUILTIN      BUILTIN           4x 10GE(LAN) SFP+
    Xcvr 0       REV 01   740-030658   B11F01892         SFP+-10G-USR
    Xcvr 1       REV 01   740-030658   B11E02880         SFP+-10G-USR
    Xcvr 2       REV 01   740-030658   B11E00725         SFP+-10G-USR
    Xcvr 3       REV 01   740-030658   B11E01057         SFP+-10G-USR
  PIC 2                   BUILTIN      BUILTIN           4x 10GE(LAN) SFP+
    Xcvr 0       REV 01   740-030658   B11E02816         SFP+-10G-USR
    Xcvr 1       REV 01   740-030658   B11C04501         SFP+-10G-USR
    Xcvr 2       REV 01   740-030658   B11E02764         SFP+-10G-USR
    Xcvr 3       REV 01   740-030658   B11E00789         SFP+-10G-USR
  PIC 3                   BUILTIN      BUILTIN           4x 10GE(LAN) SFP+
    Xcvr 0       REV 01   740-030658   B11F01250         SFP+-10G-USR
    Xcvr 1       REV 01   740-030658   B11E02847         SFP+-10G-USR
    Xcvr 2       REV 01   740-030658   B11E00787         SFP+-10G-USR
    Xcvr 3       REV 01   740-030658   B11E03803         SFP+-10G-USR
FPC 2            REV 30   750-028467   ABBN0316          MPC 3D 16x 10GE
  CPU            REV 10   711-029089   ABBJ1082          AMPC PMB
  PIC 0                   BUILTIN      BUILTIN           4x 10GE(LAN) SFP+
    Xcvr 0       REV 01   740-031980   B11K00523         SFP+-10G-SR
    Xcvr 1       REV 01   740-031980   B11K01848         SFP+-10G-SR
    Xcvr 2       REV 01   740-031980   B11K01865         SFP+-10G-SR
    Xcvr 3       REV 01   740-031980   B11K00540         SFP+-10G-SR
  PIC 1                   BUILTIN      BUILTIN           4x 10GE(LAN) SFP+
    Xcvr 0       REV 01   740-031980   B11K00422         SFP+-10G-SR
    Xcvr 1       REV 01   740-031980   B11K00428         SFP+-10G-SR
    Xcvr 2       REV 01   740-031980   B11K00423         SFP+-10G-SR
    Xcvr 3       REV 01   740-031980   B11K01855         SFP+-10G-SR
  PIC 2                   BUILTIN      BUILTIN           4x 10GE(LAN) SFP+
    Xcvr 0       REV 01   740-031980   B11K01847         SFP+-10G-SR
    Xcvr 1       REV 01   740-031980   B11K00526         SFP+-10G-SR
    Xcvr 2       REV 01   740-031980   B11K00529         SFP+-10G-SR
    Xcvr 3       REV 01   740-031980   B11K00525         SFP+-10G-SR
  PIC 3                   BUILTIN      BUILTIN           4x 10GE(LAN) SFP+
Xcvr 0       REV 01   740-031980   B11K00425         SFP+-10G-SR
    Xcvr 1       REV 01   740-031980   B11K00530         SFP+-10G-SR
    Xcvr 2       REV 01   740-031980   B11K01851         SFP+-10G-SR
    Xcvr 3       REV 01   740-031980   B11K00528         SFP+-10G-SR
FPC 3            REV 32   750-028467   ABBN6832          MPC 3D 16x 10GE
  CPU            REV 10   711-029089   ABBK6534          AMPC PMB
  PIC 0                   BUILTIN      BUILTIN           4x 10GE(LAN) SFP+
    Xcvr 0       REV 01   740-031980   AK80MB4           SFP+-10G-SR
    Xcvr 1       REV 01   740-031980   AK80FQ6           SFP+-10G-SR
    Xcvr 2       REV 01   740-031980   AK80N1F           SFP+-10G-SR
    Xcvr 3       REV 01   740-031980   AK80NLQ           SFP+-10G-SR
  PIC 1                   BUILTIN      BUILTIN           4x 10GE(LAN) SFP+
    Xcvr 0       REV 01   740-031980   AK80KDR           SFP+-10G-SR
    Xcvr 1       REV 01   740-031980   AK80FGJ           SFP+-10G-SR
    Xcvr 2       REV 01   740-031980   AK80N5G           SFP+-10G-SR
    Xcvr 3       REV 01   740-031980   AK80KD8           SFP+-10G-SR
  PIC 2                   BUILTIN      BUILTIN           4x 10GE(LAN) SFP+
    Xcvr 0       REV 01   740-031980   AK80LET           SFP+-10G-SR
    Xcvr 1       REV 01   740-031980   AK80N1X           SFP+-10G-SR
    Xcvr 2       REV 01   740-031980   AK80NRF           SFP+-10G-SR
    Xcvr 3       REV 01   740-031980   AK80NL2           SFP+-10G-SR
  PIC 3                   BUILTIN      BUILTIN           4x 10GE(LAN) SFP+
```

```
    Xcvr 0       REV 01   740-031980   AK80N3D          SFP+-10G-SR
    Xcvr 1       REV 01   740-031980   AK80MRB          SFP+-10G-SR
    Xcvr 2       REV 01   740-031980   AK80LEQ          SFP+-10G-SR
    Xcvr 3       REV 01   740-031980   AK80LER          SFP+-10G-SR
FPC 4            REV 32   750-028467   ABBN6811         MPC 3D 16x 10GE
  CPU            REV 10   711-029089   ABBN7288         AMPC PMB
  PIC 0                   BUILTIN      BUILTIN          4x 10GE(LAN) SFP+
    Xcvr 0       REV 01   740-031980   AK80NK8          SFP+-10G-SR
    Xcvr 1       REV 01   740-031980   AK80LJG          SFP+-10G-SR
    Xcvr 2       REV 01   740-031980   AK80LBU          SFP+-10G-SR
    Xcvr 3       REV 01   740-031980   AK80N21          SFP+-10G-SR
  PIC 1                   BUILTIN      BUILTIN          4x 10GE(LAN) SFP+
    Xcvr 0       REV 01   740-031980   AK80LEU          SFP+-10G-SR
    Xcvr 1       REV 01   740-031980   AK80NLM          SFP+-10G-SR
    Xcvr 2       REV 01   740-031980   AK80NL6          SFP+-10G-SR
    Xcvr 3       REV 01   740-031980   AK80LES          SFP+-10G-SR
  PIC 2                   BUILTIN      BUILTIN          4x 10GE(LAN) SFP+
    Xcvr 0       REV 01   740-031980   AK80LEN          SFP+-10G-SR
    Xcvr 1       REV 01   740-031980   AK80ME0          SFP+-10G-SR
    Xcvr 2       REV 01   740-031980   AK80LMG          SFP+-10G-SR
    Xcvr 3       REV 01   740-031980   AK80MM1          SFP+-10G-SR
  PIC 3                   BUILTIN      BUILTIN          4x 10GE(LAN) SFP+
    Xcvr 0       REV 01   740-031980   AK80MG7          SFP+-10G-SR
    Xcvr 1       REV 01   740-031980   AK80KF9          SFP+-10G-SR
    Xcvr 2       REV 01   740-031980   AK80NRQ          SFP+-10G-SR
    Xcvr 3       REV 01   740-031980   AK80NLE          SFP+-10G-SR
FPC 5            REV 32   750-028467   ABBN6791         MPC 3D 16x 10GE
  CPU            REV 10   711-029089   ABBN7289         AMPC PMB
  PIC 0                   BUILTIN      BUILTIN          4x 10GE(LAN) SFP+
    Xcvr 0       REV 01   740-031980   B11K00424        SFP+-10G-SR
    Xcvr 1       REV 01   740-031980   B11K01849        SFP+-10G-SR
    Xcvr 2       REV 01   740-031980   B11K01862        SFP+-10G-SR
    Xcvr 3       REV 01   740-031980   B11K01852        SFP+-10G-SR
  PIC 1                   BUILTIN      BUILTIN          4x 10GE(LAN) SFP
Xcvr 0       REV 01   740-031980   B11K00427        SFP+-10G-SR
    Xcvr 1       REV 01   740-031980   B11K00430        SFP+-10G-SR
    Xcvr 2       REV 01   740-031980   B11K01854        SFP+-10G-SR
    Xcvr 3       REV 01   740-031980   B11K00426        SFP+-10G-SR
  PIC 2                   BUILTIN      BUILTIN          4x 10GE(LAN) SFP+
    Xcvr 0       REV 01   740-031980   B11K00429        SFP+-10G-SR
    Xcvr 1       REV 01   740-031980   B11K01864        SFP+-10G-SR
    Xcvr 2       REV 01   740-031980   B11K01850        SFP+-10G-SR
    Xcvr 3       REV 01   740-031980   B11K00522        SFP+-10G-SR
  PIC 3                   BUILTIN      BUILTIN          4x 10GE(LAN) SFP+
    Xcvr 0       REV 01   740-030658   B11E01144        SFP+-10G-USR
    Xcvr 1       REV 01   740-030658   B11E00985        SFP+-10G-USR
    Xcvr 2       REV 01   740-030658   B11E00796        SFP+-10G-USR
    Xcvr 3       REV 01   740-031980   B11K01866        SFP+-10G-SR
FPC 6            REV 30   750-028467   ABBM4592         MPC 3D 16x 10GE
  CPU            REV 10   711-029089   ABBN0465         AMPC PMB
  PIC 0                   BUILTIN      BUILTIN          4x 10GE(LAN) SFP+
    Xcvr 0       REV 01   740-030658   B11F01435        SFP+-10G-USR
    Xcvr 1       REV 01   740-030658   B11E01052        SFP+-10G-USR
    Xcvr 2       REV 01   740-030658   B11F01328        SFP+-10G-USR
    Xcvr 3       REV 01   740-030658   B11F01254        SFP+-10G-USR
  PIC 1                   BUILTIN      BUILTIN          4x 10GE(LAN) SFP+
    Xcvr 0       REV 01   740-030658   B11E02738        SFP+-10G-USR
    Xcvr 1       REV 01   740-030658   B11E02881        SFP+-10G-USR
    Xcvr 2       REV 01   740-030658   B11F01624        SFP+-10G-USR
    Xcvr 3       REV 01   740-030658   B11E00889        SFP+-10G-USR
  PIC 2                   BUILTIN      BUILTIN          4x 10GE(LAN) SFP+
```

```
    Xcvr 0       REV 01   740-030658   B11E02883         SFP+-10G-USR
    Xcvr 1       REV 01   740-030658   B11E00681         SFP+-10G-USR
    Xcvr 2       REV 01   740-030658   B11E04306         SFP+-10G-USR
    Xcvr 3       REV 01   740-030658   B11E02813         SFP+-10G-USR
  PIC 3                   BUILTIN      BUILTIN           4x 10GE(LAN) SFP+
    Xcvr 0       REV 01   740-030658   B11F01801         SFP+-10G-USR
    Xcvr 1       REV 01   740-030658   B11E02753         SFP+-10G-USR
    Xcvr 2       REV 01   740-030658   B11E01156         SFP+-10G-USR
    Xcvr 3       REV 01   740-030658   B11E04324         SFP+-10G-USR
FPC 7            REV 32   750-028467   ABBN6810          MPC 3D 16x 10GE
  CPU            REV 10   711-029089   ABBN7237          AMPC PMB
  PIC 0                   BUILTIN      BUILTIN           4x 10GE(LAN) SFP+
    Xcvr 0       REV 01   740-031980   163363A03058      SFP+-10G-SR
    Xcvr 1       REV 01   740-031980   163363A02082      SFP+-10G-SR
    Xcvr 2       REV 01   740-031980   163363A01674      SFP+-10G-SR
    Xcvr 3       REV 01   740-031980   163363A02638      SFP+-10G-SR
  PIC 1                   BUILTIN      BUILTIN           4x 10GE(LAN) SFP+
    Xcvr 0       REV 01   740-031980   163363A03048      SFP+-10G-SR
    Xcvr 1       REV 01   740-031980   163363A02729      SFP+-10G-SR
    Xcvr 2       REV 01   740-031980   163363A02566      SFP+-10G-SR
    Xcvr 3       REV 01   740-031980   163363A02567      SFP+-10G-SR
  PIC 2                   BUILTIN      BUILTIN           4x 10GE(LAN) SFP+
    Xcvr 0       REV 01   740-031980   163363A02878      SFP+-10G-SR
    Xcvr 1       REV 01   740-031980   163363A02739      SFP+-10G-SR
    Xcvr 2       REV 01   740-031980   163363A01959      SFP+-10G-SR
    Xcvr 3       REV 01   740-031980   163363A02660      SFP+-10G-SR
  PIC 3                   BUILTIN      BUILTIN           4x 10GE(LAN) SFP+
    Xcvr 0       REV 01   740-031980   163363A02731      SFP+-10G-SR
    Xcvr 1       REV 01   740-031980   163363A02588      SFP+-10G-SR
 Xcvr 2       REV 01   740-031980   163363A02673      SFP+-10G-SR
    Xcvr 3       REV 01   740-031980   163363A02654      SFP+-10G-SR
FPC 8            REV 30   750-028467   ABBM4739          MPC 3D 16x 10GE
  CPU            REV 10   711-029089   ABBN0487          AMPC PMB
  PIC 0                   BUILTIN      BUILTIN           4x 10GE(LAN) SFP+
    Xcvr 0       REV 01   740-031980   163363A02569      SFP+-10G-SR
    Xcvr 1       REV 01   740-031980   163363A02886      SFP+-10G-SR
    Xcvr 2       REV 01   740-031980   163363A03082      SFP+-10G-SR
    Xcvr 3       REV 01   740-031980   133363A00297      SFP+-10G-SR
  PIC 1                   BUILTIN      BUILTIN           4x 10GE(LAN) SFP+
    Xcvr 0       REV 01   740-031980   163363A02726      SFP+-10G-SR
    Xcvr 1       REV 01   740-031980   163363A03050      SFP+-10G-SR
    Xcvr 2       REV 01   740-031980   163363A02884      SFP+-10G-SR
    Xcvr 3       REV 01   740-031980   163363A03076      SFP+-10G-SR
  PIC 2                   BUILTIN      BUILTIN           4x 10GE(LAN) SFP+
    Xcvr 0       REV 01   740-031980   163363A02581      SFP+-10G-SR
    Xcvr 1       REV 01   740-031980   163363A02873      SFP+-10G-SR
    Xcvr 2       REV 01   740-031980   163363A02582      SFP+-10G-SR
    Xcvr 3       REV 01   740-031980   163363A03083      SFP+-10G-SR
  PIC 3                   BUILTIN      BUILTIN           4x 10GE(LAN) SFP+
    Xcvr 0       REV 01   740-031981   UL70BU6           SFP+-10G-LR
    Xcvr 1       REV 01   740-031981   UL50QC6           SFP+-10G-LR
    Xcvr 2       REV 01   740-031981   UL708N6           SFP+-10G-LR
    Xcvr 3       REV 01   740-031981   UL603KK           SFP+-10G-LR
FPC 9            REV 32   750-028467   ABBN6827          MPC 3D 16x 10GE
  CPU            REV 10   711-029089   ABBK6508          AMPC PMB
  PIC 0                   BUILTIN      BUILTIN           4x 10GE(LAN) SFP+
    Xcvr 0       REV 01   740-031980   163363A01688      SFP+-10G-SR
    Xcvr 1       REV 01   740-031980   163363A01724      SFP+-10G-SR
    Xcvr 2       REV 01   740-031980   163363A01773      SFP+-10G-SR
    Xcvr 3       REV 01   740-031980   163363A02593      SFP+-10G-SR
  PIC 1                   BUILTIN      BUILTIN           4x 10GE(LAN) SFP+
```

```
    Xcvr 0       REV 01   740-031980   163363A03061      SFP+-10G-SR
    Xcvr 1       REV 01   740-031980   163363A03056      SFP+-10G-SR
    Xcvr 2       REV 01   740-031980   163363A02669      SFP+-10G-SR
    Xcvr 3       REV 01   740-031980   163363A03070      SFP+-10G-SR
  PIC 2                   BUILTIN      BUILTIN           4x 10GE(LAN) SFP+
    Xcvr 0       REV 01   740-031980   163363A02572      SFP+-10G-SR
    Xcvr 1       REV 01   740-031980   163363A02697      SFP+-10G-SR
    Xcvr 2       REV 01   740-031980   163363A02585      SFP+-10G-SR
    Xcvr 3       REV 01   740-031980   163363A03052      SFP+-10G-SR
  PIC 3                   BUILTIN      BUILTIN           4x 10GE(LAN) SFP+
    Xcvr 0       REV 01   740-031980   163363A02591      SFP+-10G-SR
    Xcvr 1       REV 01   740-031980   163363A02649      SFP+-10G-SR
    Xcvr 2       REV 01   740-031980   163363A02577      SFP+-10G-SR
    Xcvr 3       REV 01   740-031980   163363A02698      SFP+-10G-SR
FPC 10           REV 30   750-028467   ABBN0302          MPC 3D 16x 10GE
  CPU            REV 10   711-029089   ABBN0495          AMPC PMB
  PIC 0                   BUILTIN      BUILTIN           4x 10GE(LAN) SFP+
    Xcvr 0       REV 01   740-030658   B11F01581         SFP+-10G-USR
    Xcvr 1       REV 01   740-030658   B11E01176         SFP+-10G-USR
    Xcvr 2       REV 01   740-030658   B11F01251         SFP+-10G-USR
    Xcvr 3       REV 01   740-030658   B11E02752         SFP+-10G-USR
  PIC 1                   BUILTIN      BUILTIN           4x 10GE(LAN) SFP+
    Xcvr 0       REV 01   740-030658   B11E00786         SFP+-10G-USR
    Xcvr 1       REV 01   740-030658   B11E01020         SFP+-10G-USR
 Xcvr 2       REV 01   740-030658   B11E01023         SFP+-10G-USR
    Xcvr 3       REV 01   740-030658   B11E02819         SFP+-10G-USR
  PIC 2                   BUILTIN      BUILTIN           4x 10GE(LAN) SFP+
    Xcvr 0       REV 01   740-030658   B11E02812         SFP+-10G-USR
    Xcvr 1       REV 01   740-030658   B11D04437         SFP+-10G-USR
    Xcvr 2       REV 01   740-030658   B11F01279         SFP+-10G-USR
    Xcvr 3       REV 01   740-030658   B11F01333         SFP+-10G-USR
  PIC 3                   BUILTIN      BUILTIN           4x 10GE(LAN) SFP+
    Xcvr 0       REV 01   740-030658   B11E00978         SFP+-10G-USR
    Xcvr 1       REV 01   740-030658   B11E01018         SFP+-10G-USR
    Xcvr 2       REV 01   740-030658   B11F01784         SFP+-10G-USR
    Xcvr 3       REV 01   740-031980   AK80NKP           SFP+-10G-SR
FPC 11           REV 32   750-028467   ABBN6790          MPC 3D 16x 10GE
  CPU            REV 10   711-029089   ABBK6515          AMPC PMB
  PIC 0                   BUILTIN      BUILTIN           4x 10GE(LAN) SFP+
    Xcvr 0       REV 01   740-031980   AK80LZM           SFP+-10G-SR
    Xcvr 1       REV 01   740-031980   AK80MCC           SFP+-10G-SR
    Xcvr 2       REV 01   740-031980   AK80KCM           SFP+-10G-SR
    Xcvr 3       REV 01   740-031980   AK80KE0           SFP+-10G-SR
  PIC 1                   BUILTIN      BUILTIN           4x 10GE(LAN) SFP+
    Xcvr 0       REV 01   740-021310   C10F99155         SFP+-10G-LRM
    Xcvr 1       REV 01   740-021310   C10F99049         SFP+-10G-LRM
    Xcvr 2       REV 01   740-021310   C10F99128         SFP+-10G-LRM
    Xcvr 3       REV 01   740-021310   C10F99169         SFP+-10G-LRM
  PIC 2                   BUILTIN      BUILTIN           4x 10GE(LAN) SFP+
    Xcvr 0       REV 01   740-031980   AK80LF3           SFP+-10G-SR
    Xcvr 1       REV 01   740-031980   163363A02597      SFP+-10G-SR
    Xcvr 2       REV 01   740-031980   163363A03060      SFP+-10G-SR
    Xcvr 3       REV 01   740-031980   163363A03057      SFP+-10G-SR
  PIC 3                   BUILTIN      BUILTIN           4x 10GE(LAN) SFP+
    Xcvr 0       REV 01   740-031980   AK80LEX           SFP+-10G-SR
    Xcvr 1       REV 01   740-031980   AK80FEU           SFP+-10G-SR
    Xcvr 2       REV 01   740-031980   AK80FNM           SFP+-10G-SR
    Xcvr 3       REV 01   740-021308   AJQ0Q5G           SFP+-10G-SR
FPC 12           REV 30   750-028467   ZM5111            MPC 3D 16x 10GE
  CPU            REV 10   711-029089   ZP6607            AMPC PMB
  PIC 0                   BUILTIN      BUILTIN           4x 10GE(LAN) SFP+
```

```
    Xcvr 0       REV 01   740-031980   AK80LJA          SFP+-10G-SR
    Xcvr 1       REV 01   740-031980   AK80MFZ          SFP+-10G-SR
    Xcvr 2       REV 01   740-031980   AK80NKL          SFP+-10G-SR
    Xcvr 3       REV 01   740-031980   AK80KF4          SFP+-10G-SR
  PIC 1                   BUILTIN      BUILTIN          4x 10GE(LAN) SFP+
    Xcvr 0       REV 01   740-031980   AK80FBJ          SFP+-10G-SR
    Xcvr 1       REV 01   740-031980   AK80MM2          SFP+-10G-SR
    Xcvr 2       REV 01   740-031980   AK80LJV          SFP+-10G-SR
    Xcvr 3       REV 01   740-031980   AK80NXV          SFP+-10G-SR
  PIC 2                   BUILTIN      BUILTIN          4x 10GE(LAN) SFP+
    Xcvr 0       REV 01   740-031980   AK80N1H          SFP+-10G-SR
    Xcvr 1       REV 01   740-031980   AK80NLS          SFP+-10G-SR
    Xcvr 2       REV 01   740-031980   AK80FL5          SFP+-10G-SR
    Xcvr 3       REV 01   740-031980   AK80NL9          SFP+-10G-SR
  PIC 3                   BUILTIN      BUILTIN          4x 10GE(LAN) SFP+
    Xcvr 0       REV 01   740-031980   AK80NG2          SFP+-10G-SR
    Xcvr 1       REV 01   740-031980   AK80KDU          SFP+-10G-SR
    Xcvr 2       REV 01   740-031980   AK80MG1          SFP+-10G-SR
    Xcvr 3       REV 01   740-031980   AK80MM0          SFP+-10G-SR
FPC 13           REV 30   750-028467   ABBN0208         MPC 3D 16x 10GE
  CPU            REV 10   711-029089   ABBJ1084         AMPC PMB
  PIC 0                   BUILTIN      BUILTIN          4x 10GE(LAN) SFP+
    Xcvr 0       REV 01   740-030658   B11E04745        SFP+-10G-USR
    Xcvr 1       REV 01   740-030658   B11F01570        SFP+-10G-USR
    Xcvr 2       REV 01   740-030658   B11E04388        SFP+-10G-USR
    Xcvr 3       REV 01   740-030658   B11F01439        SFP+-10G-USR
  PIC 1                   BUILTIN      BUILTIN          4x 10GE(LAN) SFP+
    Xcvr 0       REV 01   740-030658   B11E04739        SFP+-10G-USR
    Xcvr 1       REV 01   740-030658   B11F01869        SFP+-10G-USR
    Xcvr 2       REV 01   740-030658   B11F01675        SFP+-10G-USR
    Xcvr 3       REV 01   740-030658   B11F01901        SFP+-10G-USR
  PIC 2                   BUILTIN      BUILTIN          4x 10GE(LAN) SFP+
    Xcvr 0       REV 01   740-030658   B11F01346        SFP+-10G-USR
    Xcvr 1       REV 01   740-030658   B11F01288        SFP+-10G-USR
    Xcvr 2       REV 01   740-030658   B11F01824        SFP+-10G-USR
    Xcvr 3       REV 01   740-030658   B11E04312        SFP+-10G-USR
  PIC 3                   BUILTIN      BUILTIN          4x 10GE(LAN) SFP+
    Xcvr 0       REV 01   740-030658   B11E02811        SFP+-10G-USR
    Xcvr 1       REV 01   740-030658   B11E03847        SFP+-10G-USR
    Xcvr 2       REV 01   740-030658   B11F01495        SFP+-10G-USR
    Xcvr 3       REV 01   740-030658   B11F01265        SFP+-10G-USR
FPC 14           REV 23   750-028467   YN2977           MPC 3D 16x 10GE
  CPU            REV 10   711-029089   YP1856           AMPC PMB
  PIC 0                   BUILTIN      BUILTIN          4x 10GE(LAN) SFP+
    Xcvr 0       REV 01   740-031980   183363A00875     SFP+-10G-SR
    Xcvr 1       REV 01   740-031980   183363A00851     SFP+-10G-SR
    Xcvr 2       REV 01   740-031980   183363A00772     SFP+-10G-SR
    Xcvr 3       REV 01   740-031980   183363A00882     SFP+-10G-SR
  PIC 1                   BUILTIN      BUILTIN          4x 10GE(LAN) SFP+
    Xcvr 0       REV 01   740-031980   183363A00735     SFP+-10G-SR
    Xcvr 1       REV 01   740-031980   183363A00169     SFP+-10G-SR
    Xcvr 2       REV 01   740-031980   183363A00726     SFP+-10G-SR
    Xcvr 3       REV 01   740-031980   183363A00077     SFP+-10G-SR
  PIC 2                   BUILTIN      BUILTIN          4x 10GE(LAN) SFP+
    Xcvr 0       REV 01   740-031980   183363A00168     SFP+-10G-SR
    Xcvr 1       REV 01   740-031980   183363A00676     SFP+-10G-SR
    Xcvr 2       REV 01   740-031980   183363A00732     SFP+-10G-SR
    Xcvr 3       REV 01   740-031980   183363A00091     SFP+-10G-SR
  PIC 3                   BUILTIN      BUILTIN          4x 10GE(LAN) SFP+
    Xcvr 0       REV 01   740-031980   183363A00725     SFP+-10G-SR
    Xcvr 1       REV 01   740-031980   183363A00642     SFP+-10G-SR
```

```
    Xcvr 2       REV 01   740-031980   183363A00871      SFP+-10G-SR
    Xcvr 3       REV 01   740-031980   183363A00853      SFP+-10G-SR
FPC 15           REV 32   750-028467   ABBN6798          MPC 3D 16x 10GE
  CPU            REV 10   711-029089   ABBK6556          AMPC PMB
  PIC 0                   BUILTIN      BUILTIN           4x 10GE(LAN) SFP+
    Xcvr 0       REV 01   740-021308   9ZDZ06A00055      SFP+-10G-SR
    Xcvr 1       REV 01   740-031980   183363A00239      SFP+-10G-SR
    Xcvr 2       REV 01   740-021308   AD0915E003K       SFP+-10G-SR
    Xcvr 3       REV 01   740-021308   AD0915E003A       SFP+-10G-SR
  PIC 1                   BUILTIN      BUILTIN           4x 10GE(LAN) SFP+
    Xcvr 0       REV 01   740-031980   AK80MRC           SFP+-10G-SR
    Xcvr 1       REV 01   740-031980   AK80NL5           SFP+-10G-SR
    Xcvr 2       REV 01   740-031980   AK80NKN           SFP+-10G-SR
    Xcvr 3       REV 01   740-031980   AK80N3U           SFP+-10G-SR
 PIC 2                   BUILTIN      BUILTIN           4x 10GE(LAN) SFP+
    Xcvr 0       REV 01   740-031980   AK80N1T           SFP+-10G-SR
    Xcvr 1       REV 01   740-031980   AJ808DJ           SFP+-10G-SR
    Xcvr 2       REV 01   740-031980   AK80NG4           SFP+-10G-SR
    Xcvr 3       REV 01   740-031980   AK80FND           SFP+-10G-SR
  PIC 3                   BUILTIN      BUILTIN           4x 10GE(LAN) SFP+
    Xcvr 0       REV 01   740-031980   AK80FKQ           SFP+-10G-SR
    Xcvr 1       REV 01   740-031980   AK80NLT           SFP+-10G-SR
    Xcvr 2       REV 01   740-031980   AK80NKR           SFP+-10G-SR
    Xcvr 3       REV 01   740-031980   AK80LKM           SFP+-10G-SR
FPC 16           REV 30   750-028467   ABBN0270          MPC 3D 16x 10GE
  CPU            REV 10   711-029089   ABBJ0966          AMPC PMB
  PIC 0                   BUILTIN      BUILTIN           4x 10GE(LAN) SFP+
    Xcvr 0       REV 01   740-031980   AK80NL1           SFP+-10G-SR
    Xcvr 1       REV 01   740-031980   AK80NXW           SFP+-10G-SR
    Xcvr 2       REV 01   740-031980   AK80KD2           SFP+-10G-SR
    Xcvr 3       REV 01   740-031980   AK80FMD           SFP+-10G-SR
  PIC 1                   BUILTIN      BUILTIN           4x 10GE(LAN) SFP+
    Xcvr 0       REV 01   740-031980   AK80NKQ           SFP+-10G-SR
    Xcvr 1       REV 01   740-031980   AK80MGH           SFP+-10G-SR
    Xcvr 2       REV 01   740-031980   AK80N38           SFP+-10G-SR
    Xcvr 3       REV 01   740-031980   AK80NL7           SFP+-10G-SR
  PIC 2                   BUILTIN      BUILTIN           4x 10GE(LAN) SFP+
    Xcvr 0       REV 01   740-031980   AK80M5J           SFP+-10G-SR
    Xcvr 1       REV 01   740-031980   AK80NKD           SFP+-10G-SR
    Xcvr 2       REV 01   740-031980   AK80KCY           SFP+-10G-SR
    Xcvr 3       REV 01   740-031980   AK80LHK           SFP+-10G-SR
  PIC 3                   BUILTIN      BUILTIN           4x 10GE(LAN) SFP+
    Xcvr 0       REV 01   740-031980   AK80LEL           SFP+-10G-SR
    Xcvr 1       REV 01   740-031980   AK80MBE           SFP+-10G-SR
    Xcvr 2       REV 01   740-031980   AK80NLG           SFP+-10G-SR
    Xcvr 3       REV 01   740-031980   AK80LFH           SFP+-10G-SR
FPC 17           REV 32   750-028467   ABBN6796          MPC 3D 16x 10GE
  CPU            REV 10   711-029089   ABBN7259          AMPC PMB
  PIC 0                   BUILTIN      BUILTIN           4x 10GE(LAN) SFP+
    Xcvr 0       REV 01   740-031980   B11K01856         SFP+-10G-SR
    Xcvr 1       REV 01   740-031980   B11K01853         SFP+-10G-SR
    Xcvr 2       REV 01   740-031980   B11K01863         SFP+-10G-SR
    Xcvr 3       REV 01   740-031980   163363A02863      SFP+-10G-SR
  PIC 1                   BUILTIN      BUILTIN           4x 10GE(LAN) SFP+
    Xcvr 0       REV 01   740-031980   163363A02668      SFP+-10G-SR
    Xcvr 1       REV 01   740-031980   163363A02881      SFP+-10G-SR
    Xcvr 2       REV 01   740-031980   163363A01671      SFP+-10G-SR
    Xcvr 3       REV 01   740-031980   163363A02627      SFP+-10G-SR
  PIC 2                   BUILTIN      BUILTIN           4x 10GE(LAN) SFP+
    Xcvr 0       REV 01   740-031980   163363A02725      SFP+-10G-SR
    Xcvr 1       REV 01   740-031980   163363A02692      SFP+-10G-SR
```

```
    Xcvr 2       REV 01   740-031980   163363A02730      SFP+-10G-SR
    Xcvr 3       REV 01   740-031980   163363A03081      SFP+-10G-SR
  PIC 3                   BUILTIN      BUILTIN           4x 10GE(LAN) SFP+
    Xcvr 0       REV 01   740-031980   163363A02736      SFP+-10G-SR
    Xcvr 1       REV 01   740-031980   163363A02568      SFP+-10G-SR
    Xcvr 2       REV 01   740-031980   163363A02747      SFP+-10G-SR
    Xcvr 3       REV 01   740-031980   163363A02579      SFP+-10G-SR
FPC 18           REV 30   750-028467   ABBN0281          MPC 3D 16x 10GE
  CPU            REV 10   711-029089   ABBN0526          AMPC PMB
PIC 0                   BUILTIN      BUILTIN           4x 10GE(LAN) SFP+
    Xcvr 0       REV 01   740-030658   B11F01326         SFP+-10G-USR
    Xcvr 1       REV 01   740-030658   B11E03973         SFP+-10G-USR
    Xcvr 2       REV 01   740-030658   B11E00950         SFP+-10G-USR
    Xcvr 3       REV 01   740-030658   B11E00674         SFP+-10G-USR
  PIC 1                   BUILTIN      BUILTIN           4x 10GE(LAN) SFP+
    Xcvr 0       REV 01   740-030658   B11E00775         SFP+-10G-USR
    Xcvr 1       REV 01   740-030658   B11E04461         SFP+-10G-USR
    Xcvr 2       REV 01   740-030658   B11E01074         SFP+-10G-USR
    Xcvr 3       REV 01   740-030658   B11E02821         SFP+-10G-USR
  PIC 2                   BUILTIN      BUILTIN           4x 10GE(LAN) SFP+
    Xcvr 0       REV 01   740-030658   B11E04501         SFP+-10G-USR
    Xcvr 1       REV 01   740-030658   B11E00757         SFP+-10G-USR
    Xcvr 2       REV 01   740-030658   B11F01623         SFP+-10G-USR
    Xcvr 3       REV 01   740-030658   B11E01022         SFP+-10G-USR
  PIC 3                   BUILTIN      BUILTIN           4x 10GE(LAN) SFP+
    Xcvr 0       REV 01   740-030658   B11E04359         SFP+-10G-USR
    Xcvr 1       REV 01   740-030658   B11E02751         SFP+-10G-USR
    Xcvr 2       REV 01   740-030658   B11E02736         SFP+-10G-USR
    Xcvr 3       REV 01   740-030658   B11E01178         SFP+-10G-USR
FPC 19           REV 32   750-028467   ABBN6813          MPC 3D 16x 10GE
  CPU            REV 10   711-029089   ABBK6542          AMPC PMB
  PIC 0                   BUILTIN      BUILTIN           4x 10GE(LAN) SFP+
    Xcvr 0       REV 01   740-031980   AK80NA3           SFP+-10G-SR
    Xcvr 1       REV 01   740-031980   AK80NLF           SFP+-10G-SR
    Xcvr 2       REV 01   740-031980   AK80MRH           SFP+-10G-SR
    Xcvr 3       REV 01   740-031980   AK80KE4           SFP+-10G-SR
  PIC 1                   BUILTIN      BUILTIN           4x 10GE(LAN) SFP+
    Xcvr 0       REV 01   740-021308   973152A00030      SFP+-10G-SR
    Xcvr 1       REV 01   740-031980   AK80L9H           SFP+-10G-SR
    Xcvr 2       REV 01   740-031980   AK80ME8           SFP+-10G-SR
    Xcvr 3       REV 01   740-031980   AK80NLR           SFP+-10G-SR
  PIC 2                   BUILTIN      BUILTIN           4x 10GE(LAN) SFP+
    Xcvr 0       REV 01   740-031980   AK80NG1           SFP+-10G-SR
    Xcvr 1       REV 01   740-031980   AK80MCA           SFP+-10G-SR
    Xcvr 2       REV 01   740-031980   AK80LFC           SFP+-10G-SR
    Xcvr 3       REV 01   740-031980   AK80LEM           SFP+-10G-SR
  PIC 3                   BUILTIN      BUILTIN           4x 10GE(LAN) SFP+
    Xcvr 0       REV 01   740-031980   AK80N9X           SFP+-10G-SR
    Xcvr 1       REV 01   740-031980   AK80LAC           SFP+-10G-SR
    Xcvr 2       REV 01   740-031980   AK80LF2           SFP+-10G-SR
    Xcvr 3       REV 01   740-031980   AK80N8T           SFP+-10G-SR
ADC 0            REV 13   750-043596   ABBX5561          Adapter Card
ADC 1            REV 13   750-043596   ABBX5546          Adapter Card
ADC 2            REV 13   750-043596   ABBX5535          Adapter Card
ADC 3            REV 13   750-043596   ABBX5552          Adapter Card
ADC 4            REV 13   750-043596   ABBX5581          Adapter Card
ADC 5            REV 13   750-043596   ABBX5545          Adapter Card
ADC 6            REV 13   750-043596   ABBX5554          Adapter Card
ADC 7            REV 07   750-043596   ABBV7194          Adapter Card
ADC 8            REV 07   750-043596   ABBV7251          Adapter Card
ADC 9            REV 07   750-043596   ABBV7202          Adapter Card
```

```
ADC 10          REV 13   750-043596   ABBX5579          Adapter Card
ADC 11          REV 13   750-043596   ABBX5548          Adapter Card
ADC 12          REV 13   750-043596   ABBX5575          Adapter Card
ADC 13          REV 13   750-043596   ABBX5539          Adapter Card
ADC 14          REV 13   750-043596   ABBX5555          Adapter Card
ADC 15          REV 13   750-043596   ABBX5557          Adapter Card
ADC 16          REV 13   750-043596   ABBX5536          Adapter Card
ADC 17          REV 13   750-043596   ABBX5559          Adapter Card
ADC 18          REV 13   750-043596   ABBX5537          Adapter Card
ADC 19          REV 11   750-043596   ABBW5685          Adapter Card
Fan Tray 0      REV 04   760-046960   ACAY0090          172mm FanTray - 6 Fans
Fan Tray 1      REV 04   760-046960   ACAY0088          172mm FanTray - 6 Fans
Fan Tray 2      REV 04   760-046960   ACAY0089          172mm FanTray - 6 Fans
Fan Tray 3      REV 04   760-046960   ACAY0108          172mm FanTray - 6 Fans
```

show chassis hardware models (MX2020 Router)

```
user@host > show chassis hardware models
Hardware inventory:
Item            Version  Part number  Serial number     FRU model number
Midplane        REV 27   750-040240   ABAB9384          750-040240
FPM Board       REV 06   760-040242   ABBT8837          760-040242
PSM 0           REV 01   740-045050   1E02224006G       MX2000-PSM-HC-DC-S-A
PSM 1           REV 01   740-045050   1E022240053       MX2000-PSM-HC-DC-S-A
PSM 2           REV 01   740-045050   1E02224004K       MX2000-PSM-HC-DC-S-A
PSM 3           REV 01   740-045050   1E022240056       MX2000-PSM-HC-DC-S-A
PSM 4           REV 01   740-045050   1E022240054       MX2000-PSM-HC-DC-S-A
PSM 5           REV 01   740-045050   1E02224005H       MX2000-PSM-HC-DC-S-A
PSM 6           REV 01   740-045050   1E02224006S       MX2000-PSM-HC-DC-S-A
PSM 7           REV 01   740-045050   1E02224005M       MX2000-PSM-HC-DC-S-A
PSM 8           REV 01   740-045050   1E022240062       MX2000-PSM-HC-DC-S-A
PSM 9           REV 03   740-045050   1EDB2350095       MX2000-PSM-DC-S-A
PSM 10          REV 03   740-045050   1EDB235009L       MX2000-PSM-DC-S-A
PSM 11          REV 03   740-045050   1EDB2350092       MX2000-PSM-DC-S-A
PSM 12          REV 03   740-045050   1EDB23500AT       MX2000-PSM-DC-S-A
PSM 13          REV 03   740-045050   1EDB2350094       MX2000-PSM-DC-S-A
PSM 15          REV 03   740-045050   1EDB235008X       MX2000-PSM-DC-S-A
PDM 0           REV 01   740-045234   1E012150033
PDM 1           REV 01   740-045234   1E012150027
PDM 2           REV 01   740-045234   1E262250072       MX2000-PDM-DC-S-A
Routing Engine 0 REV 02  740-041821   9009094138        RE-S-1800X4-16G-S
Routing Engine 1 REV 02  740-041821   9009089709        RE-S-1800X4-16G-S
CB 0            REV 08   750-040257   CAAB3482          750-040257
CB 1            REV 04   750-040257   ZT2864            750-040257
SFB 0           REV 05   711-044466   ABBT2161          MX2000-SFB-S
SFB 1           REV 05   711-044466   ABBT2159          MX2000-SFB-S
SFB 2           REV 05   711-044466   ABBX3718          MX2000-SFB-S
SFB 4           REV 05   711-044466   ABBT2160          MX2000-SFB-S
SFB 5           REV 05   711-044466   ABBT2145          MX2000-SFB-S
SFB 7           REV 05   711-044466   ABBT2163          MX2000-SFB-S
FPC 0           REV 30   750-028467   ABBN0284          MPC-3D-16XGE-SFPP
FPC 1           REV 30   750-028467   ABBN0308          MPC-3D-16XGE-SFPP
FPC 2           REV 30   750-028467   ABBN0316          MPC-3D-16XGE-SFPP
FPC 3           REV 32   750-028467   ABBN6832          MPC-3D-16XGE-SFPP
FPC 4           REV 32   750-028467   ABBN6811          MPC-3D-16XGE-SFPP
FPC 5           REV 32   750-028467   ABBN6791          MPC-3D-16XGE-SFPP
FPC 6           REV 30   750-028467   ABBM4592          MPC-3D-16XGE-SFPP
FPC 7           REV 32   750-028467   ABBN6810          MPC-3D-16XGE-SFPP
FPC 8           REV 30   750-028467   ABBM4739          MPC-3D-16XGE-SFPP
FPC 9           REV 32   750-028467   ABBN6827          MPC-3D-16XGE-SFPP
FPC 10          REV 30   750-028467   ABBN0302          MPC-3D-16XGE-SFPP
```

```
FPC 11           REV 32   750-028467   ABBN6790          MPC-3D-16XGE-SFPP
FPC 12           REV 30   750-028467   ZM5111            MPC-3D-16XGE-SFPP
FPC 13           REV 30   750-028467   ABBN0208          MPC-3D-16XGE-SFPP
FPC 14           REV 23   750-028467   YN2977            MPC-3D-16XGE-SFPP
FPC 15           REV 32   750-028467   ABBN6798          MPC-3D-16XGE-SFPP
FPC 16           REV 30   750-028467   ABBN0270          MPC-3D-16XGE-SFPP
FPC 17           REV 32   750-028467   ABBN6796          MPC-3D-16XGE-SFPP
FPC 18           REV 30   750-028467   ABBN0281          MPC-3D-16XGE-SFPP
FPC 19           REV 32   750-028467   ABBN6813          MPC-3D-16XGE-SFPP
ADC 0            REV 13   750-043596   ABBX5561          PROTO-ASSEMBLY
ADC 1            REV 13   750-043596   ABBX5546          PROTO-ASSEMBLY
ADC 2            REV 13   750-043596   ABBX5535          MX2000-LC-ADAPTER
ADC 3            REV 13   750-043596   ABBX5552          MX2000-LC-ADAPTER
ADC 4            REV 13   750-043596   ABBX5581          MX2000-LC-ADAPTER
ADC 5            REV 13   750-043596   ABBX5545          PROTO-ASSEMBLY
ADC 6            REV 13   750-043596   ABBX5554          PROTO-ASSEMBLY
ADC 7            REV 07   750-043596   ABBV7194          MX2000-LC-ADAPTER
ADC 8            REV 07   750-043596   ABBV7251          MX2000-LC-ADAPTER
ADC 9            REV 07   750-043596   ABBV7202          MX2000-LC-ADAPTER
ADC 10           REV 13   750-043596   ABBX5579          MX2000-LC-ADAPTER
ADC 12           REV 13   750-043596   ABBX5575          MX2000-LC-ADAPTER
ADC 13           REV 13   750-043596   ABBX5539          PROTO-ASSEMBLY
ADC 14           REV 13   750-043596   ABBX5555          PROTO-ASSEMBLY
ADC 15           REV 13   750-043596   ABBX5557          MX2000-LC-ADAPTER
ADC 16           REV 13   750-043596   ABBX5536          PROTO-ASSEMBLY
ADC 17           REV 13   750-043596   ABBX5559          PROTO-ASSEMBLY
ADC 18           REV 13   750-043596   ABBX5537          PROTO-ASSEMBLY
ADC 19           REV 11   750-043596   ABBW5685          PROTO-ASSEMBLY
Fan Tray 0       REV 04   760-046960   ACAY0090
Fan Tray 1       REV 04   760-046960   ACAY0088
Fan Tray 2       REV 04   760-046960   ACAY0089
Fan Tray 3       REV 04   760-046960   ACAY0108
```

show chassis hardware clei-models (MX2020 Router)

```
user@ host > show chassis hardware clei-models
Hardware inventory:
Item             Version  Part number  CLEI code         FRU model number
Midplane         REV 27   750-040240   PROTOXCLEI        750-040240
FPM Board        REV 06   760-040242   PROTOXCLEI        760-040242
PSM 0            REV 01   740-045050   IPUPAJMKAA        MX2000-PSM-HC-DC-S-A
PSM 1            REV 01   740-045050   IPUPAJMKAA        MX2000-PSM-HC-DC-S-A
PSM 2            REV 01   740-045050   IPUPAJMKAA        MX2000-PSM-HC-DC-S-A
PSM 3            REV 01   740-045050   IPUPAJMKAA        MX2000-PSM-HC-DC-S-A
PSM 4            REV 01   740-045050   IPUPAJMKAA        MX2000-PSM-HC-DC-S-A
PSM 5            REV 01   740-045050   IPUPAJMKAA        MX2000-PSM-HC-DC-S-A
PSM 6            REV 01   740-045050   IPUPAJMKAA        MX2000-PSM-HC-DC-S-A
PSM 7            REV 01   740-045050   IPUPAJMKAA        MX2000-PSM-HC-DC-S-A
PSM 8            REV 01   740-045050   IPUPAJMKAA        MX2000-PSM-HC-DC-S-A
PSM 9            REV 03   740-045050   IPUPAJMKAA        MX2000-PSM-DC-S-A
PSM 10           REV 03   740-045050   IPUPAJMKAA        MX2000-PSM-DC-S-A
PSM 11           REV 03   740-045050   IPUPAJMKAA        MX2000-PSM-DC-S-A
PSM 12           REV 03   740-045050   IPUPAJMKAA        MX2000-PSM-DC-S-A
PSM 13           REV 03   740-045050   IPUPAJMKAA        MX2000-PSM-DC-S-A
PSM 15           REV 03   740-045050   IPUPAJMKAA        MX2000-PSM-DC-S-A
PDM 0            REV 01   740-045234
PDM 1            REV 01   740-045234
PDM 2            REV 01   740-045234   IPUPAJSKAA        MX2000-PDM-DC-S-A
Routing Engine 0 REV 02   740-041821                     RE-S-1800X4-16G-S
Routing Engine 1 REV 02   740-041821                     RE-S-1800X4-16G-S
CB 0             REV 08   750-040257   PROTOXCLEI        750-040257
```

```
CB 1            REV 04   750-040257   PROTOXCLEI        750-040257
SFB 0           REV 05   711-044466   IPUCBA6CAA        MX2000-SFB-S
SFB 1           REV 05   711-044466   IPUCBA6CAA        MX2000-SFB-S
SFB 2           REV 05   711-044466   IPUCBA6CAA        MX2000-SFB-S
SFB 4           REV 05   711-044466   IPUCBA6CAA        MX2000-SFB-S
SFB 5           REV 05   711-044466   IPUCBA6CAA        MX2000-SFB-S
SFB 7           REV 05   711-044466   IPUCBA6CAA        MX2000-SFB-S
FPC 0           REV 30   750-028467                     MPC-3D-16XGE-SFPP
FPC 1           REV 30   750-028467                     MPC-3D-16XGE-SFPP
FPC 2           REV 30   750-028467                     MPC-3D-16XGE-SFPP
FPC 3           REV 32   750-028467                     MPC-3D-16XGE-SFPP
FPC 4           REV 32   750-028467                     MPC-3D-16XGE-SFPP
FPC 5           REV 32   750-028467                     MPC-3D-16XGE-SFPP
FPC 6           REV 30   750-028467                     MPC-3D-16XGE-SFPP
FPC 7           REV 32   750-028467                     MPC-3D-16XGE-SFPP
FPC 8           REV 30   750-028467                     MPC-3D-16XGE-SFPP
FPC 9           REV 32   750-028467                     MPC-3D-16XGE-SFPP
FPC 10          REV 30   750-028467                     MPC-3D-16XGE-SFPP
FPC 11          REV 32   750-028467                     MPC-3D-16XGE-SFPP
FPC 12          REV 30   750-028467                     MPC-3D-16XGE-SFPP
FPC 13          REV 30   750-028467                     MPC-3D-16XGE-SFPP
FPC 14          REV 23   750-028467                     MPC-3D-16XGE-SFPP
FPC 15          REV 32   750-028467                     MPC-3D-16XGE-SFPP
FPC 16          REV 30   750-028467                     MPC-3D-16XGE-SFPP
FPC 17          REV 32   750-028467                     MPC-3D-16XGE-SFPP
FPC 18          REV 30   750-028467                     MPC-3D-16XGE-SFPP
FPC 19          REV 32   750-028467                     MPC-3D-16XGE-SFPP
ADC 0           REV 13   750-043596   PROTOXCLEI        PROTO-ASSEMBLY
ADC 1           REV 13   750-043596   PROTOXCLEI        PROTO-ASSEMBLY
ADC 2           REV 13   750-043596   IPUCBA8CAA        MX2000-LC-ADAPTER
ADC 3           REV 13   750-043596   IPUCBA8CAA        MX2000-LC-ADAPTER
ADC 4           REV 13   750-043596   IPUCBA8CAA        MX2000-LC-ADAPTER
ADC 5           REV 13   750-043596   PROTOXCLEI        PROTO-ASSEMBLY
ADC 6           REV 13   750-043596   PROTOXCLEI        PROTO-ASSEMBLY
ADC 7           REV 07   750-043596   PROTOXCLEI        MX2000-LC-ADAPTER
ADC 8           REV 07   750-043596   PROTOXCLEI        MX2000-LC-ADAPTER
ADC 9           REV 07   750-043596   PROTOXCLEI        MX2000-LC-ADAPTER
ADC 10          REV 13   750-043596   IPUCBA8CAA        MX2000-LC-ADAPTER
ADC 12          REV 13   750-043596   IPUCBA8CAA        MX2000-LC-ADAPTER
ADC 13          REV 13   750-043596   PROTOXCLEI        PROTO-ASSEMBLY
ADC 14          REV 13   750-043596   PROTOXCLEI        PROTO-ASSEMBLY
ADC 15          REV 13   750-043596   IPUCBA8CAA        MX2000-LC-ADAPTER
ADC 16          REV 13   750-043596   PROTOXCLEI        PROTO-ASSEMBLY
ADC 17          REV 13   750-043596   PROTOXCLEI        PROTO-ASSEMBLY
ADC 18          REV 13   750-043596   PROTOXCLEI        PROTO-ASSEMBLY
ADC 19          REV 11   750-043596   PROTOXCLEI        PROTO-ASSEMBLY
Fan Tray 0      REV 04   760-046960
Fan Tray 1      REV 04   760-046960
Fan Tray 2      REV 04   760-046960
Fan Tray 3      REV 04   760-046960
```

show chassis hardware (MX2020 Router with MPC5EQ and MPC6E)

```
user@host> show chassis hardware
Hardware inventory:
Item            Version  Part number  Serial number     Description
Chassis                               JN120BADBAFJ      MX2020
Midplane        REV 51   750-040240   ABAB9243          Lower Backplane
Midplane 1      REV 04   711-032386   ABAB9399          Upper Backplane
PMP 1           REV 05   711-032428   ACAJ2541          Upper Power Midplane
PMP 0           REV 04   711-032426   ACAJ2194          Lower Power Midplane
```

```
FPM Board        REV 13   760-040242   ABCA8835          Front Panel Display
PSM 0            REV 01   740-050037   1EDB32403L5       DC 52V Power Supply
Module
PSM 1            REV 01   740-050037   1EDB32403L3       DC 52V Power Supply
Module
PSM 2            REV 01   740-050037   1EDB32403KM       DC 52V Power Supply
Module
PSM 3            REV 01   740-050037   1EDB3130079       DC 52V Power Supply
Module
PSM 4            REV 01   740-050037   1EDB3130077       DC 52V Power Supply
Module
PSM 5            REV 01   740-050037   1EDB3130020       DC 52V Power Supply
Module
PSM 6            REV 01   740-050037   1EDB313009S       DC 52V Power Supply
Module
PSM 7            REV 01   740-050037   1EDB313008E       DC 52V Power Supply
Module
PSM 8            REV 01   740-050037   1EDB3130063       DC 52V Power Supply
Module
PSM 12           REV 01   740-050037   1EDB3130026       DC 52V Power Supply
Module
PSM 13           REV 01   740-050037   1EDB3130074       DC 52V Power Supply
Module
PSM 14           REV 01   740-050037   1EDB313009D       DC 52V Power Supply
Module
PSM 15           REV 01   740-050037   1EDB3130024       DC 52V Power Supply
Module
PSM 16           REV 01   740-050037   1EDB3130054       DC 52V Power Supply
Module
PSM 17           REV 01   740-050037   1EDB3130080       DC 52V Power Supply
Module
PDM 0            REV 03   740-045234   1EGA3170144       DC Power Dist Module
PDM 1            REV 03   740-045234   1EGA3170158       DC Power Dist Module
PDM 2            REV 03   740-045234   1EGA3170182       DC Power Dist Module
PDM 3            REV 03   740-045234   1EGA3170207       DC Power Dist Module
Routing Engine 0 REV 02   740-041821   9009112112        RE-S-1800x4
Routing Engine 1 REV 02   740-041821   9009112087        RE-S-1800x4
CB 0             REV 23   750-040257   CABA2295          Control Board
CB 1             REV 23   750-040257   CABE8379          Control Board
SPMB 0           REV 02   711-041855   ABCE8851          PMB Board
SPMB 1           REV 02   711-041855   ABCE8839          PMB Board
SFB 0            REV 06   711-044466   ABCD5001          Switch Fabric Board
SFB 1            REV 06   711-044466   ABCD5034          Switch Fabric Board
SFB 2            REV 06   711-044466   ABCH3899          Switch Fabric Board
SFB 3            REV 06   711-044466   ABCD5020          Switch Fabric Board
SFB 4            REV 06   711-044466   ABCD4975          Switch Fabric Board
SFB 5            REV 06   711-044466   ABCH3881          Switch Fabric Board
SFB 6            REV 06   711-044466   ABCD5026          Switch Fabric Board
SFB 7            REV 06   711-044466   ABCD5032          Switch Fabric Board
FPC 0            REV 39   750-045715   CACD1902          MPC5E 3D Q 24XGE+6XLGE
  CPU            REV 09   711-045719   CACB1933          RMPC PMB
  PIC 0                   BUILTIN      BUILTIN           12X10GE SFPP OTN
    Xcvr 0       REV 01   740-031980   B11F00361         SFP+-10G-SR
    Xcvr 2       REV 01   740-021308   19T511101854      SFP+-10G-SR
    Xcvr 3       REV 01   740-021308   19T511100377      SFP+-10G-SR
    Xcvr 4       REV 01   740-031980   ANT0878           SFP+-10G-SR
    Xcvr 5       REV 01   740-021308   19T511100398      SFP+-10G-SR
    Xcvr 6       REV 01   740-021308   AQ4363J           SFP+-10G-SR
    Xcvr 7       REV 01   740-021308   19T511101377      SFP+-10G-SR
    Xcvr 8       REV 01   740-031980   ANT072M           SFP+-10G-SR
    Xcvr 9       REV 01   740-021308   AG90C7N           SFP+-10G-SR
```

```
    Xcvr 10      REV 01   740-031980   AM30M09          SFP+-10G-SR
    Xcvr 11      REV 01   740-031980   B10E01016        SFP+-10G-SR
  PIC 1                   BUILTIN      BUILTIN          12X10GE SFPP OTN
 Xcvr 0       REV 01   740-031980   B10L04151         SFP+-10G-SR
    Xcvr 1       REV 01   740-021308   19T511101379     SFP+-10G-SR
    Xcvr 2       REV 01   740-021308   AQ5036J          SFP+-10G-SR
    Xcvr 3       REV 01   740-021308   AG90C4M          SFP+-10G-SR
    Xcvr 4       REV 01   740-021308   19T511101104     SFP+-10G-SR
    Xcvr 5       REV 01   740-021308   AQ502ZM          SFP+-10G-SR
    Xcvr 6       REV 01   740-021308   AN10KY2          SFP+-10G-SR
    Xcvr 7       REV 01   740-021308   AQ43G41          SFP+-10G-SR
    Xcvr 8       REV 01   740-021308   AQ41F04          SFP+-10G-SR
    Xcvr 9       REV 01   740-031980   AMS16N3          SFP+-10G-SR
    Xcvr 10      REV 01   740-021308   AMH04Y3          SFP+-10G-SR
    Xcvr 11      REV 01   740-021308   ANA093E          SFP+-10G-SR
  PIC 2                   BUILTIN      BUILTIN          3X40GE QSFPP
  PIC 3                   BUILTIN      BUILTIN          3X40GE QSFPP
  WAN MEZZ       REV 09   750-049136   CABN0410         MPC5E 24XGE OTN Mezz
FPC 1            REV 11   750-045372   CABK8112         MPCE Type 3 3D
  CPU            REV 08   711-035209   CABJ6621         HMPC PMB 2G
  MIC 0          REV 07   750-033307   CAAZ2897         10X10GE SFPP
    PIC 0                 BUILTIN      BUILTIN          10X10GE SFPP
      Xcvr 0     REV 01   740-021308   AQ501VK          SFP+-10G-SR
      Xcvr 1     REV 01   740-021308   AQ501YC          SFP+-10G-SR
      Xcvr 2     REV 01   740-021308   AQ43HJF          SFP+-10G-SR
      Xcvr 3     REV 01   740-021308   AQ43H8D          SFP+-10G-SR
      Xcvr 4     REV 01   740-021308   19T511100370     SFP+-10G-SR
      Xcvr 5     REV 01   740-031980   153363A00763     SFP+-10G-SR
      Xcvr 6     REV 01   740-021308   APH2LXB          SFP+-10G-SR
      Xcvr 7     REV 01   740-031980   AMC0LVV          SFP+-10G-SR
      Xcvr 8     REV 01   740-031980   B11F00230        SFP+-10G-SR
  MIC 1          REV 14   750-033196   CAAP1390         1X100GE CXP
    PIC 2                 BUILTIN      BUILTIN          1X100GE CXP
      Xcvr 0     REV 01   740-032166   XB11F000M        CFP2-100G-SR10
FPC 2            REV 17   750-037355   CAAS5826         MPC4E 3D 2CGE+8XGE
  CPU            REV 08   711-035209   CAAR3986         HMPC PMB 2G
  PIC 0                   BUILTIN      BUILTIN          4x10GE SFPP
    Xcvr 0       REV 01   740-021308   T09F43722        SFP+-10G-SR
    Xcvr 1       REV 01   740-031980   ALP0KXF          SFP+-10G-SR
    Xcvr 2       REV 01   740-021308   AQ502FG          SFP+-10G-SR
    Xcvr 3       REV 01   740-021308   AQ502T7          SFP+-10G-SR
  PIC 1                   BUILTIN      BUILTIN          1X100GE CFP
    Xcvr 0       REV 01   740-035329   X12J00571        CFP-100G-SR10
  PIC 2                   BUILTIN      BUILTIN          4x10GE SFPP
    Xcvr 0       REV 01   740-031980   AJ71KEH          SFP+-10G-SR
    Xcvr 1       REV 01   740-031980   B11E01355        SFP+-10G-SR
    Xcvr 3       REV 01   740-031980   B11F00249        SFP+-10G-SR
  PIC 3                   BUILTIN      BUILTIN          1X100GE CFP
FPC 3            REV 05   750-044444   CAAY9920         MPCE Type 2 3D P
  CPU            REV 04   711-038484   CAAW3639         MPCE PMB 2G
  MIC 0          REV 28   750-028387   CAAX1083         3D 4x 10GE  XFP
    PIC 0                 BUILTIN      BUILTIN          2x 10GE  XFP
      Xcvr 0               NON-JNPR     CC07BK05B        XFP-10G-SR
      Xcvr 1     REV 01   740-011571   C728XJ00U        XFP-10G-SR
    PIC 1                 BUILTIN      BUILTIN          2x 10GE  XFP
      Xcvr 0               NON-JNPR     T12L92339        XFP-10G-SR
  QXM 0          REV 06   711-028408   CAAW4915         MPC QXM
  QXM 1          REV 06   711-028408   CAAW4894         MPC QXM
FPC 4            REV 18   750-046005   CACH5661         MPC5E 3D Q 2CGE+4XGE
 CPU            REV 09   711-045719   CACF2880         RMPC PMB
  PIC 0                   BUILTIN      BUILTIN          2X10GE SFPP OTN
```

```
  PIC 1                   BUILTIN      BUILTIN           1X100GE CFP2 OTN
    Xcvr 0       REV 01   740-046563   XD16FC03Y         CFP2-100G-SR10
  PIC 2                   BUILTIN      BUILTIN           2X10GE SFPP OTN
  PIC 3                   BUILTIN      BUILTIN           1X100GE CFP2 OTN
    Xcvr 0       REV 01   740-049775   J13K72997         CFP2-100G-LR4-D
FPC 5            REV 35   750-028467   CAAR2623          MPC 3D 16x 10GE
  CPU            REV 11   711-029089   CAAR0491          AMPC PMB
  PIC 0                   BUILTIN      BUILTIN           4x 10GE(LAN) SFP+
    Xcvr 0       REV 01   740-021308   AQ5027T           SFP+-10G-SR
    Xcvr 1       REV 01   740-021308   AQ502J0           SFP+-10G-SR
    Xcvr 2       REV 01   740-021308   AQ5027S           SFP+-10G-SR
    Xcvr 3       REV 01   740-021308   AQ501Y7           SFP+-10G-SR
  PIC 1                   BUILTIN      BUILTIN           4x 10GE(LAN) SFP+
    Xcvr 0       REV 01   740-021308   AQ501YB           SFP+-10G-SR
    Xcvr 1       REV 01   740-021308   AQ503EB           SFP+-10G-SR
    Xcvr 2       REV 01   740-021308   AQ43HJH           SFP+-10G-SR
    Xcvr 3       REV 01   740-021308   AQ43J0Y           SFP+-10G-SR
  PIC 2                   BUILTIN      BUILTIN           4x 10GE(LAN) SFP+
    Xcvr 0       REV 01   740-021308   AQ50352           SFP+-10G-SR
    Xcvr 1       REV 01   740-021308   AQ501X6           SFP+-10G-SR
    Xcvr 2       REV 01   740-021308   AQ502NV           SFP+-10G-SR
    Xcvr 3       REV 01   740-021308   AQ502ZJ           SFP+-10G-SR
  PIC 3                   BUILTIN      BUILTIN           4x 10GE(LAN) SFP+
    Xcvr 0       REV 01   740-021308   AQ502H4           SFP+-10G-SR
    Xcvr 1       REV 01   740-021308   AQ43HJK           SFP+-10G-SR
    Xcvr 2       REV 01   740-031980   AJ30CU7           SFP+-10G-SR
FPC 9            REV 30   750-044130   ABCF5773          MPC6E 3D
  CPU            REV 09   711-045719   ABCF1270          RMPC PMB
  MIC 0          REV 05   750-049457   ABCD7829          2X100GE CFP2 OTN
    PIC 0                 BUILTIN      BUILTIN           2X100GE CFP2 OTN
      Xcvr 0              NON-JNPR     FE13F000K         CFP2-100G-SR10
      Xcvr 1     REV 01   740-048813   XD32FE017         CFP2-100G-LR-D
  MIC 1          REV 07   750-049457   ABCK2812          2X100GE CFP2 OTN
    PIC 1                 BUILTIN      BUILTIN           2X100GE CFP2 OTN
      Xcvr 0     REV 01   740-048813   XD32FE018         CFP2-100G-SR10
      Xcvr 1              NON-JNPR     FE13F000E         CFP2-100G-LR4-D
  XLM 0          REV 05.2.00 711-046638 ABCF5915         MPC6E XL
  XLM 1          REV 05.2.00 711-046638 ABCF5916         MPC6E XL
FPC 10           REV 36   750-044130   ABCS8602          MPC6E 3D
  CPU            REV 09   711-045719   ABCS8779          RMPC PMB
  MIC 0          REV 06   750-049979   ABCK2656          24X10GE SFPP OTN
    PIC 0                 BUILTIN      BUILTIN           24X10GE SFPP OTN
      Xcvr 0     REV 01   740-021308   AQ43J08           SFP+-10G-SR
      Xcvr 1     REV 01   740-021308   AQE1Y2E           SFP+-10G-SR
      Xcvr 2     REV 01   740-021308   AQE1UW4           SFP+-10G-SR
      Xcvr 3     REV 01   740-021308   AQE1MQF           SFP+-10G-SR
      Xcvr 4     REV 01   740-021308   AQG0MN1           SFP+-10G-SR
      Xcvr 5     REV 01   740-021308   AQE1L9M           SFP+-10G-SR
      Xcvr 6     REV 01   740-021308   AQG0MPD           SFP+-10G-SR
      Xcvr 7     REV 01   740-021308   AQE1Y2B           SFP+-10G-SR
      Xcvr 8     REV 01   740-021308   AQG0LT5           SFP+-10G-SR
      Xcvr 9     REV 01   740-021308   AQD2ET4           SFP+-10G-SR
      Xcvr 10    REV 01   740-021308   AQG0MPC           SFP+-10G-SR
      Xcvr 11    REV 01   740-021308   AQG0M63           SFP+-10G-SR
      Xcvr 12    REV 01   740-021308   AQG0LT1           SFP+-10G-SR
      Xcvr 13    REV 01   740-021308   AQG0M4L           SFP+-10G-SR
      Xcvr 14    REV 01   740-021308   AQG0LS7           SFP+-10G-SR
      Xcvr 15    REV 01   740-021308   AQE1MQB           SFP+-10G-SR
      Xcvr 16    REV 01   740-021308   AQG0LZP           SFP+-10G-SR
      Xcvr 17    REV 01   740-021308   AQE1LU9           SFP+-10G-SR
      Xcvr 18    REV 01   740-021308   AQG0MRZ           SFP+-10G-SR
```

```
      Xcvr 19    REV 01   740-021308   AQE1MQ9          SFP+-10G-SR
      Xcvr 20    REV 01   740-021308   AQG0LRX          SFP+-10G-SR
      Xcvr 21    REV 01   740-021308   AQE1UWD          SFP+-10G-SR
      Xcvr 22    REV 01   740-021308   AQG0LT4          SFP+-10G-SR
      Xcvr 23    REV 01   740-021308   AQE1MQL          SFP+-10G-SR
  MIC 1          REV 12   750-050008   ABCK5372         4X100GE CXP
    PIC 1                 BUILTIN      BUILTIN          4X100GE CXP
      Xcvr 3     REV 01   740-046563   XD16FC02Z        CFP2-100G-SR10
  XLM 0          REV 07.2.00 711-046638 ABCK3481        MPC6E XL
  XLM 1          REV 07.2.00 711-046638 ABCK4725        MPC6E XL
FPC 17           REV 28   750-044130   ABBZ3873         MPC6E 3D
  CPU            REV 08   711-045719   ABBZ3770         RMPC PMB
  MIC 0          REV 11   750-046535   ABCC7731         24X10GE SFPP
    PIC 0                 BUILTIN      BUILTIN          24X10GE SFPP
      Xcvr 1     REV 01   740-021308   APK0543          SFP+-10G-SR
      Xcvr 2     REV 01   740-031980   B10G01119        SFP+-10G-SR
      Xcvr 3     REV 01   740-021308   AQ502SX          SFP+-10G-SR
      Xcvr 4     REV 01   740-021308   AQ43H84          SFP+-10G-SR
      Xcvr 5     REV 01   740-021308   AQ501TB          SFP+-10G-SR
      Xcvr 6     REV 01   740-021308   AQ502JZ          SFP+-10G-SR
      Xcvr 7     REV 01   740-021308   AQ502SC          SFP+-10G-SR
      Xcvr 8     REV 01   740-021308   AQ502JW          SFP+-10G-SR
      Xcvr 9     REV 01   740-021308   AQ502RM          SFP+-10G-SR
      Xcvr 10    REV 01   740-031980   AHK013B          SFP+-10G-SR
      Xcvr 11    REV 01   740-021308   AQG0MRT          SFP+-10G-SR
      Xcvr 13    REV 01   740-031980   AMC0JTC          SFP+-10G-SR
      Xcvr 14    REV 01   740-021308   ANA0MQ0          SFP+-10G-SR
      Xcvr 15    REV 01   740-021308   AQ502GS          SFP+-10G-SR
      Xcvr 16    REV 01   740-021308   AQG0M0J          SFP+-10G-SR
      Xcvr 17    REV 01   740-021308   AQG0MUR          SFP+-10G-SR
      Xcvr 18    REV 01   740-021308   AQG0MRR          SFP+-10G-SR
      Xcvr 19    REV 01   740-021308   AQG0M0F          SFP+-10G-SR
      Xcvr 20    REV 01   740-021308   AQ50312          SFP+-10G-SR
      Xcvr 21    REV 01   740-021308   AQ5032U          SFP+-10G-SR
      Xcvr 22    REV 01   740-021308   APE17B5          SFP+-10G-SR
      Xcvr 23    REV 01   740-021309   91D104A00011     SFP+-10G-LR
  MIC 1          REV 03   750-050008   ABCC4522         4X100GE CXP
    PIC 1                 BUILTIN      BUILTIN          4X100GE CXP
      Xcvr 0     REV 01   740-046563   XD16FC02U        CFP2-100G-SR10
      Xcvr 1     REV 01   740-046563   XC42FC03K        CFP2-100G-SR10
      Xcvr 2     REV 01   740-046563   XC42FC01Z        CFP2-100G-SR10
      Xcvr 3     REV 01   740-046563   XC42FC02U        CFP2-100G-SR10
  XLM 0          REV 04.2.00 711-046638 ABBZ3779        MPC6E XL
  XLM 1          REV 04.2.00 711-046638 ABBZ3780        MPC6E XL
FPC 18           REV 39   750-045715   CACD1910         MPC5E 3D Q 24XGE+6XLGE
  CPU            REV 09   711-045719   CACD1817         RMPC PMB
  PIC 0                   BUILTIN      BUILTIN          12X10GE SFPP OTN
  PIC 1                   BUILTIN      BUILTIN          12X10GE SFPP OTN
  PIC 2                   BUILTIN      BUILTIN          3X40GE QSFPP
 Xcvr 0       REV 01   740-046565   QD130194         QSFP+-40G-SR4
    Xcvr 1       REV 01   740-046565   QD130193         QSFP+-40G-SR4
    Xcvr 2       REV 01   740-046565   QD130196         QSFP+-40G-SR4
  PIC 3                   BUILTIN      BUILTIN          3X40GE QSFPP
    Xcvr 0       REV 01   740-046565   QD130191         QSFP+-40G-SR4
    Xcvr 1       REV 01   740-046565   QD130198         QSFP+-40G-SR4
    Xcvr 2       REV 01   740-046565   QD130192         QSFP+-40G-SR4
  WAN MEZZ       REV 09   750-049136   CABN0411         MPC5E 24XGE OTN Mezz
FPC 19           REV 39   750-045715   CACD1908         MPC5E 3D Q 24XGE+6XLGE
  CPU            REV 09   711-045719   CACD1820         RMPC PMB
  PIC 0                   BUILTIN      BUILTIN          12X10GE SFPP OTN
    Xcvr 0       REV 01   740-021308   AQA0EXJ          SFP+-10G-SR
```

```
    Xcvr 1       REV 01   740-021308   AQG0M6D          SFP+-10G-SR
    Xcvr 2       REV 01   740-021308   AQG0LW7          SFP+-10G-SR
    Xcvr 3       REV 01   740-021308   AQA0JKB          SFP+-10G-SR
    Xcvr 4       REV 01   740-021308   AQG0MTM          SFP+-10G-SR
    Xcvr 5       REV 01   740-021308   AQA07NE          SFP+-10G-SR
    Xcvr 6       REV 01   740-021308   AQG0M41          SFP+-10G-SR
    Xcvr 7       REV 01   740-021308   AQG0MU7          SFP+-10G-SR
    Xcvr 8       REV 01   740-021308   AQG0MUG          SFP+-10G-SR
    Xcvr 9       REV 01   740-021308   AQG0MMX          SFP+-10G-SR
    Xcvr 10      REV 01   740-021308   AQG0M5K          SFP+-10G-SR
    Xcvr 11      REV 01   740-021308   AQG0LVZ          SFP+-10G-SR
  PIC 1                   BUILTIN      BUILTIN          12X10GE SFPP OTN
  PIC 2                   BUILTIN      BUILTIN          3X40GE QSFPP
  PIC 3                   BUILTIN      BUILTIN          3X40GE QSFPP
    Xcvr 0       REV 01   740-046565   QD130242         QSFP+-40G-SR4
    Xcvr 1       REV 01   740-046565   QD130245         QSFP+-40G-SR4
    Xcvr 2       REV 01   740-046565   QD130613         QSFP+-40G-SR4
  WAN MEZZ       REV 09   750-049136   CABN0418         MPC5E 24XGE OTN Mezz
ADC 0            REV 17   750-043596   ABCD5378         Adapter Card
ADC 1            REV 17   750-043596   ABCD5465         Adapter Card
ADC 2            REV 17   750-043596   ABCD5431         Adapter Card
ADC 3            REV 17   750-043596   ABCD5356         Adapter Card
ADC 4            REV 02   750-043596   ZW1545           Adapter Card
ADC 5            REV 17   750-043596   ABCD5517         Adapter Card
ADC 18           REV 17   750-043596   ABCD5535         Adapter Card
ADC 19           REV 01   750-043596   ZV4127           Adapter Card
Fan Tray 0       REV 06   760-046960   ACAY0791         172mm FanTray - 6 Fans
Fan Tray 1       REV 06   760-046960   ACAY0788         172mm FanTray - 6 Fans
Fan Tray 2       REV 06   760-046960   ACAY0755         172mm FanTray - 6 Fans
Fan Tray 3       REV 06   760-046960   ACAY0441         172mm FanTray - 6 Fans
```

show chassis hardware detail (MX2020 Router with MPC5EQ and MPC6E)

```
user@host>show chassis hardware detail
Hardware inventory:
Item             Version  Part number  Serial number     Description
Chassis                                JN120BADBAFJ      MX2020
Midplane         REV 51   750-040240   ABAB9243          Lower Backplane
Midplane 1       REV 04   711-032386   ABAB9399          Upper Backplane
PMP 1            REV 05   711-032428   ACAJ2541          Upper Power Midplane
PMP 0            REV 04   711-032426   ACAJ2194          Lower Power Midplane
FPM Board        REV 13   760-040242   ABCA8835          Front Panel Display
PSM 0            REV 01   740-050037   1EDB32403L5       DC 52V Power Supply
Module
PSM 1            REV 01   740-050037   1EDB32403L3       DC 52V Power Supply
Module
PSM 2            REV 01   740-050037   1EDB32403KM       DC 52V Power Supply
Module
PSM 3            REV 01   740-050037   1EDB3130079       DC 52V Power Supply
Module
PSM 4            REV 01   740-050037   1EDB3130077       DC 52V Power Supply
Module
PSM 5            REV 01   740-050037   1EDB3130020       DC 52V Power Supply
Module
PSM 6            REV 01   740-050037   1EDB313009S       DC 52V Power Supply
Module
PSM 7            REV 01   740-050037   1EDB313008E       DC 52V Power Supply
Module
PSM 8            REV 01   740-050037   1EDB3130063       DC 52V Power Supply
Module
PSM 12           REV 01   740-050037   1EDB3130026       DC 52V Power Supply
```

```
Module
PSM 13           REV 01   740-050037   1EDB3130074       DC 52V Power Supply
Module
PSM 14           REV 01   740-050037   1EDB313009D       DC 52V Power Supply
Module
PSM 15           REV 01   740-050037   1EDB3130024       DC 52V Power Supply
Module
PSM 16           REV 01   740-050037   1EDB3130054       DC 52V Power Supply
Module
PSM 17           REV 01   740-050037   1EDB3130080       DC 52V Power Supply
Module
PDM 0            REV 03   740-045234   1EGA3170144       DC Power Dist Module
PDM 1            REV 03   740-045234   1EGA3170158       DC Power Dist Module
PDM 2            REV 03   740-045234   1EGA3170182       DC Power Dist Module
PDM 3            REV 03   740-045234   1EGA3170207       DC Power Dist Module
Routing Engine 0 REV 02   740-041821   9009112112        RE-S-1800x4
  ad0    3998 MB  Virtium - TuffDrive VCF P1T0200274310822 113 Compact Flash
  ad1   30533 MB  UGB94BPH32H0S1-KCI   11000031656       Disk 1
  usb0 (addr 1)  EHCI root hub 0       Intel             uhub0
  usb0 (addr 2)  product 0x0020 32     vendor 0x8087     uhub1
  DIMM 0         SGU04G72H1BD2SA-BB DIE REV-52 PCB REV-54 MFR ID-ce80
  DIMM 1         SGU04G72H1BD2SA-BB DIE REV-52 PCB REV-54 MFR ID-ce80
  DIMM 2         SGU04G72H1BD2SA-BB DIE REV-52 PCB REV-54 MFR ID-ce80
  DIMM 3         SGU04G72H1BD2SA-BB DIE REV-52 PCB REV-54 MFR ID-ce80
Routing Engine 1 REV 02   740-041821   9009112087        RE-S-1800x4
  ad0    3998 MB  Virtium - TuffDrive VCF P1T0200274310822 366 Compact Flash
  ad1   30533 MB  UGB94BPH32H0S1-KCI   11000039979       Disk 1
CB 0             REV 23   750-040257   CABA2295          Control Board
CB 1             REV 23   750-040257   CABE8379          Control Board
SPMB 0
SPMB 1
FPC 0            REV 39   750-045715   CACD1902          MPC5E 3D Q 24XGE+6XLGE
  CPU
FPC 1            REV 11   750-045372   CABK8112          MPCE Type 3 3D
  CPU
FPC 2            REV 17   750-037355   CAAS5826          MPC4E 3D 2CGE+8XGE
  CPU
FPC 3            REV 05   750-044444   CAAY9920          MPCE Type 2 3D P
  CPU
FPC 4            REV 18   750-046005   CACH5661          MPC5E 3D Q 2CGE+4XGE
  CPU
FPC 5            REV 35   750-028467   CAAR2623          MPC 3D 16x 10GE
 CPU
FPC 9            REV 30   750-044130   ABCF5773          MPC6E 3D
  CPU
FPC 10           REV 36   750-044130   ABCS8602          MPC6E 3D
  CPU
FPC 17           REV 28   750-044130   ABBZ3873          MPC6E 3D
  CPU
FPC 18           REV 39   750-045715   CACD1910          MPC5E 3D Q 24XGE+6XLGE
  CPU
FPC 19           REV 39   750-045715   CACD1908          MPC5E 3D Q 24XGE+6XLGE
  CPU
Fan Tray 0       REV 06   760-046960   ACAY0791          172mm FanTray - 6 Fans
Fan Tray 1       REV 06   760-046960   ACAY0788          172mm FanTray - 6 Fans
Fan Tray 2       REV 06   760-046960   ACAY0755          172mm FanTray - 6 Fans
Fan Tray 3       REV 06   760-046960   ACAY0441          172mm FanTray - 6 Fans
```

show chassis hardware extensive (MX2020 Router with MPC5EQ and MPC6E)

```
user@host> show chassis hardware extensive
```

```
Hardware inventory:
Item             Version  Part number  Serial number     Description
Chassis                                JN120BADBAFJ      MX2020
 Jedec Code:   0x7fb0            EEPROM Version:    0x02
                                 S/N:               JN120BADBAFJ
 Assembly ID:  0x0557            Assembly Version:  00.00
 Date:         00-00-0000        Assembly Flags:    0x00
 ID: MX2020
 Board Information Record:
  Address 0x00: 00 00 00 00 00 00 00 00 00 00 00 00 00 00 00 00
 I2C Hex Data:
  Address 0x00: 7f b0 02 ff 05 57 00 00 00 00 00 00 00 00 00 00
  Address 0x10: 00 00 00 00 00 00 00 00 00 00 00 00 00 00 00 00
  Address 0x20: 4a 4e 31 32 30 42 41 44 42 41 46 4a 00 00 00 00
  Address 0x30: 00 00 00 ff 00 00 00 00 00 00 00 00 00 00 00 00
  Address 0x40: 00 00 00 00 00 00 00 00 00 00 00 00 00 00 00 00
  Address 0x50: 00 00 00 00 00 00 00 00 00 00 00 00 00 00 00 00
  Address 0x60: 00 00 00 00 00 00 00 00 00 00 00 00 00 00 00 00
  Address 0x70: 00 00 00 00 00 00 00 00 00 00 00 00 00 00 00 00
Midplane         REV 51   750-040240   ABAB9243          Lower Backplane
 Jedec Code:   0x7fb0            EEPROM Version:    0x02
 P/N:          750-040240        S/N:               ABAB9243
 Assembly ID:  0x0b22            Assembly Version:  01.51
 Date:         05-30-2013        Assembly Flags:    0x00
 Version:      REV 51            CLEI Code:         IPMU710ARA
 ID: Lower Backplane             FRU Model Number:  CHAS-BP-MX2020-S
 Board Information Record:
  Address 0x00: ad 01 10 00 4c 96 14 72 30 08 ff ff ff ff ff ff
 I2C Hex Data:
  Address 0x00: 7f b0 02 ff 0b 22 01 33 52 45 56 20 35 31 00 00
  Address 0x10: 00 00 00 00 37 35 30 2d 30 34 30 32 34 30 00 00
  Address 0x20: 53 2f 4e 20 41 42 41 42 39 32 34 33 00 1e 05 07
  Address 0x30: dd ff ff ff ad 01 10 00 4c 96 14 72 30 08 ff ff
  Address 0x40: ff ff ff ff 01 49 50 4d 55 37 31 30 41 52 41 43
  Address 0x50: 48 41 53 2d 42 50 2d 4d 58 32 30 32 30 2d 53 00
  Address 0x60: 00 00 00 00 00 00 41 00 00 ff ff ff ff ff ff ff
  Address 0x70: ff ff ff d3 ff ff ff ff ff ff ff ff ff ff ff ff
Midplane 1       REV 04   711-032386   ABAB9399          Upper Backplane
 Jedec Code:   0x7fb0            EEPROM Version:    0x01
 P/N:          711-032386        S/N:               ABAB9399
 Assembly ID:  0x0b23            Assembly Version:  01.04
 Date:         10-22-2012        Assembly Flags:    0x00
 Version:      REV 04
 ID: Upper Backplane
 Board Information Record:
  Address 0x00: ff ff ff ff ff ff ff ff ff ff ff ff ff ff ff ff
 I2C Hex Data:
  Address 0x00: 7f b0 01 fe 0b 23 01 04 52 45 56 20 30 34 00 00
  Address 0x10: 00 00 00 00 37 31 31 2d 30 33 32 33 38 36 00 00
  Address 0x20: 53 2f 4e 20 41 42 41 42 39 33 39 39 00 16 0a 07
  Address 0x30: dc ff ff ff ff ff ff ff ff ff ff ff ff ff ff ff
  Address 0x40: ff ff ff ff 00 ff ff ff ff ff ff ff ff ff ff ff
  Address 0x50: ff ff ff ff ff ff ff ff ff ff ff ff ff ff ff ff
  Address 0x60: ff ff ff ff ff ff ff ff ff ff ff ff ff ff ff ff
  Address 0x70: ff ff ff ff ff ff ff ff ff ff ff ff ff ff ff ff
PMP 1            REV 05   711-032428   ACAJ2541          Upper Power Midplane
 Jedec Code:   0x7fb0            EEPROM Version:    0x01
 P/N:          711-032428        S/N:               ACAJ2541
 Assembly ID:  0x045c            Assembly Version:  01.05
 Date:         04-26-2013        Assembly Flags:    0x00
 Version:      REV 05
```

```
 ID: Upper Power Midplane
 Board Information Record:
  Address 0x00: ff ff ff ff ff ff ff ff ff ff ff ff ff ff ff ff
 I2C Hex Data:
  Address 0x00: 7f b0 01 ff 04 5c 01 05 52 45 56 20 30 35 00 00
  Address 0x10: 00 00 00 00 37 31 31 2d 30 33 32 34 32 38 00 00
  Address 0x20: 53 2f 4e 20 41 43 41 4a 32 35 34 31 00 1a 04 07
  Address 0x30: dd ff ff ff ff ff ff ff ff ff ff ff ff ff ff ff
  Address 0x40: ff ff ff ff 00 ff ff ff ff ff ff ff ff ff ff ff
  Address 0x50: ff ff ff ff ff ff ff ff ff ff ff ff ff ff ff ff
  Address 0x60: ff ff ff ff ff ff ff ff ff ff ff ff ff ff ff ff
  Address 0x70: ff ff ff ff ff ff ff ff ff ff ff ff ff ff ff ff
PMP 0            REV 04   711-032426   ACAJ2194          Lower Power Midplane
 Jedec Code:   0x7fb0            EEPROM Version:    0x01
 P/N:          711-032426        S/N:               ACAJ2194
 Assembly ID:  0x045d            Assembly Version:  01.04
 Date:         01-29-2013        Assembly Flags:    0x00
 Version:      REV 04
 ID: Lower Power Midplane
 Board Information Record:
  Address 0x00: ff ff ff ff ff ff ff ff ff ff ff ff ff ff ff ff
 I2C Hex Data:
  Address 0x00: 7f b0 01 ff 04 5d 01 04 52 45 56 20 30 34 00 00
  Address 0x10: 00 00 00 00 37 31 31 2d 30 33 32 34 32 36 00 00
  Address 0x20: 53 2f 4e 20 41 43 41 4a 32 31 39 34 00 1d 01 07
  Address 0x30: dd ff ff ff ff ff ff ff ff ff ff ff ff ff ff ff
  Address 0x40: ff ff ff ff 00 ff ff ff ff ff ff ff ff ff ff ff
  Address 0x50: ff ff ff ff ff ff ff ff ff ff ff ff ff ff ff ff
  Address 0x60: ff ff ff ff ff ff ff ff ff ff ff ff ff ff ff ff
  Address 0x70: ff ff ff ff ff ff ff ff ff ff ff ff ff ff ff ff
FPM Board        REV 13   760-040242   ABCA8835          Front Panel Display
 Jedec Code:   0x7fb0            EEPROM Version:    0x02
 P/N:          760-040242        S/N:               ABCA8835
 Assembly ID:  0x0b24            Assembly Version:  01.13
 Date:         04-13-2013        Assembly Flags:    0x00
 Version:      REV 13            CLEI Code:         IPMYAE5JRA
 ID: Front Panel Display         FRU Model Number:  MX2020-CRAFT-S
 Board Information Record:
  Address 0x00: ff ff ff ff ff ff ff ff ff ff ff ff ff ff ff ff
 I2C Hex Data:
  Address 0x00: 7f b0 02 ff 0b 24 01 0d 52 45 56 20 31 33 00 00
  Address 0x10: 00 00 00 00 37 36 30 2d 30 34 30 32 34 32 00 00
  Address 0x20: 53 2f 4e 20 41 42 43 41 38 38 33 35 00 0d 04 07
  Address 0x30: dd ff ff ff ff ff ff ff ff ff ff ff ff ff ff ff
  Address 0x40: ff ff ff ff 01 49 50 4d 59 41 45 35 4a 52 41 4d
  Address 0x50: 58 32 30 32 30 2d 43 52 41 46 54 2d 53 00 00 00
  Address 0x60: 00 00 00 00 00 00 41 00 00 ff ff ff ff ff ff ff
  Address 0x70: ff ff ff 95 ff ff ff ff ff ff ff ff ff ff ff ff
PSM 0            REV 01   740-050037   1EDB32403L5       DC 52V Power Supply
Module
 Jedec Code:   0x7fb0            EEPROM Version:    0x02
 P/N:          740-050037        S/N:               1EDB32403L5
 Assembly ID:  0x0478            Assembly Version:  01.01
 Date:         06-21-2013        Assembly Flags:    0x00
 Version:      REV 01            CLEI Code:         IPUPAKRKAA
 ID: DC 52V Power Supply Module  FRU Model Number:  MX2000-PSM-DC-S
 Board Information Record:
  Address 0x00: ff ff ff ff ff ff ff ff ff ff ff ff ff ff ff ff
 I2C Hex Data:
  Address 0x00: 7f b0 02 ff 04 78 01 01 52 45 56 20 30 31 00 00
  Address 0x10: 00 00 00 00 37 34 30 2d 30 35 30 30 33 37 00 00
```

```
  Address 0x20: 31 45 44 42 33 32 34 30 33 4c 35 00 00 15 06 07
  Address 0x30: dd ff ff ff ff ff ff ff ff ff ff ff ff ff ff ff
  Address 0x40: ff ff ff ff 01 49 50 55 50 41 4b 52 4b 41 41 4d
  Address 0x50: 58 32 30 30 30 2d 50 53 4d 2d 44 43 2d 53 00 00
  Address 0x60: 00 00 00 00 00 00 31 30 31 ff ff ff ff ff ff ff
  Address 0x70: ff ff ff 2a 00 00 00 00 00 00 00 00 00 00 00 00
PSM 1            REV 01   740-050037   1EDB32403L3       DC 52V Power Supply
Module
 Jedec Code:   0x7fb0            EEPROM Version:    0x02
 P/N:          740-050037        S/N:               1EDB32403L3
 Assembly ID:  0x0478            Assembly Version:  01.01
 Date:         06-21-2013        Assembly Flags:    0x00
 Version:      REV 01            CLEI Code:         IPUPAKRKAA
 ID: DC 52V Power Supply Module  FRU Model Number:  MX2000-PSM-DC-S
 Board Information Record:
  Address 0x00: ff ff ff ff ff ff ff ff ff ff ff ff ff ff ff ff
 I2C Hex Data:
  Address 0x00: 7f b0 02 ff 04 78 01 01 52 45 56 20 30 31 00 00
  Address 0x10: 00 00 00 00 37 34 30 2d 30 35 30 30 33 37 00 00
  Address 0x20: 31 45 44 42 33 32 34 30 33 4c 33 00 00 15 06 07
  Address 0x30: dd ff ff ff ff ff ff ff ff ff ff ff ff ff ff ff
  Address 0x40: ff ff ff ff 01 49 50 55 50 41 4b 52 4b 41 41 4d
  Address 0x50: 58 32 30 30 30 2d 50 53 4d 2d 44 43 2d 53 00 00
  Address 0x60: 00 00 00 00 00 00 31 30 31 ff ff ff ff ff ff ff
  Address 0x70: ff ff ff 2a 00 00 00 00 00 00 00 00 00 00 00 00
PSM 2            REV 01   740-050037   1EDB32403KM       DC 52V Power Supply
Module
 Jedec Code:   0x7fb0            EEPROM Version:    0x02
 P/N:          740-050037        S/N:               1EDB32403KM
 Assembly ID:  0x0478            Assembly Version:  01.01
 Date:         06-21-2013        Assembly Flags:    0x00
 Version:      REV 01            CLEI Code:         IPUPAKRKAA
 ID: DC 52V Power Supply Module  FRU Model Number:  MX2000-PSM-DC-S
 Board Information Record:
  Address 0x00: ff ff ff ff ff ff ff ff ff ff ff ff ff ff ff ff
 I2C Hex Data:
  Address 0x00: 7f b0 02 ff 04 78 01 01 52 45 56 20 30 31 00 00
  Address 0x10: 00 00 00 00 37 34 30 2d 30 35 30 30 33 37 00 00
  Address 0x20: 31 45 44 42 33 32 34 30 33 4b 4d 00 00 15 06 07
  Address 0x30: dd ff ff ff ff ff ff ff ff ff ff ff ff ff ff ff
  Address 0x40: ff ff ff ff 01 49 50 55 50 41 4b 52 4b 41 41 4d
  Address 0x50: 58 32 30 30 30 2d 50 53 4d 2d 44 43 2d 53 00 00
  Address 0x60: 00 00 00 00 00 00 31 30 31 ff ff ff ff ff ff ff
  Address 0x70: ff ff ff 2a 00 00 00 00 00 00 00 00 00 00 00 00
PSM 3            REV 01   740-050037   1EDB3130079       DC 52V Power Supply
Module
 Jedec Code:   0x7fb0            EEPROM Version:    0x02
 P/N:          740-050037        S/N:               1EDB3130079
 Assembly ID:  0x0478            Assembly Version:  01.01
 Date:         05-16-2013        Assembly Flags:    0x00
 Version:      REV 01            CLEI Code:         IPUPAKRKAA
 ID: DC 52V Power Supply Module  FRU Model Number:  MX2000-PSM-DC-S
 Board Information Record:
  Address 0x00: ff ff ff ff ff ff ff ff ff ff ff ff ff ff ff ff
 I2C Hex Data:
  Address 0x00: 7f b0 02 ff 04 78 01 01 52 45 56 20 30 31 00 00
  Address 0x10: 00 00 00 00 37 34 30 2d 30 35 30 30 33 37 00 00
  Address 0x20: 31 45 44 42 33 31 33 30 30 37 39 00 00 10 05 07
  Address 0x30: dd ff ff ff ff ff ff ff ff ff ff ff ff ff ff ff
  Address 0x40: ff ff ff ff 01 49 50 55 50 41 4b 52 4b 41 41 4d
  Address 0x50: 58 32 30 30 30 2d 50 53 4d 2d 44 43 2d 53 00 00
```

```
  Address 0x60: 00 00 00 00 00 00 31 30 31 ff ff ff ff ff ff ff
  Address 0x70: ff ff ff 2a 00 00 00 00 00 00 00 00 00 00 00 00
PSM 4            REV 01   740-050037   1EDB3130077       DC 52V Power Supply
Module
 Jedec Code:   0x7fb0            EEPROM Version:    0x02
 P/N:          740-050037        S/N:               1EDB3130077
 Assembly ID:  0x0478            Assembly Version:  01.01
 Date:         05-17-2013        Assembly Flags:    0x00
 Version:      REV 01            CLEI Code:         IPUPAKRKAA
 ID: DC 52V Power Supply Module  FRU Model Number:  MX2000-PSM-DC-S
 Board Information Record:
  Address 0x00: ff ff ff ff ff ff ff ff ff ff ff ff ff ff ff ff
 I2C Hex Data:
  Address 0x00: 7f b0 02 ff 04 78 01 01 52 45 56 20 30 31 00 00
  Address 0x10: 00 00 00 00 37 34 30 2d 30 35 30 30 33 37 00 00
  Address 0x20: 31 45 44 42 33 31 33 30 30 37 37 00 00 11 05 07
  Address 0x30: dd ff ff ff ff ff ff ff ff ff ff ff ff ff ff ff
  Address 0x40: ff ff ff ff 01 49 50 55 50 41 4b 52 4b 41 41 4d
  Address 0x50: 58 32 30 30 30 2d 50 53 4d 2d 44 43 2d 53 00 00
  Address 0x60: 00 00 00 00 00 00 31 30 31 ff ff ff ff ff ff ff
  Address 0x70: ff ff ff 2a 00 00 00 00 00 00 00 00 00 00 00 00
PSM 5            REV 01   740-050037   1EDB3130020       DC 52V Power Supply
Module
 Jedec Code:   0x7fb0            EEPROM Version:    0x02
 P/N:          740-050037        S/N:               1EDB3130020
 Assembly ID:  0x0478            Assembly Version:  01.01
 Date:         05-16-2013        Assembly Flags:    0x00
 Version:      REV 01            CLEI Code:         IPUPAKRKAA
 ID: DC 52V Power Supply Module  FRU Model Number:  MX2000-PSM-DC-S
 Board Information Record:
  Address 0x00: ff ff ff ff ff ff ff ff ff ff ff ff ff ff ff ff
 I2C Hex Data:
  Address 0x00: 7f b0 02 ff 04 78 01 01 52 45 56 20 30 31 00 00
  Address 0x10: 00 00 00 00 37 34 30 2d 30 35 30 30 33 37 00 00
  Address 0x20: 31 45 44 42 33 31 33 30 30 32 30 00 00 10 05 07
  Address 0x30: dd ff ff ff ff ff ff ff ff ff ff ff ff ff ff ff
  Address 0x40: ff ff ff ff 01 49 50 55 50 41 4b 52 4b 41 41 4d
  Address 0x50: 58 32 30 30 30 2d 50 53 4d 2d 44 43 2d 53 00 00
  Address 0x60: 00 00 00 00 00 00 31 30 31 ff ff ff ff ff ff ff
  Address 0x70: ff ff ff 2a 00 00 00 00 00 00 00 00 00 00 00 00
PSM 6            REV 01   740-050037   1EDB313009S       DC 52V Power Supply
Module
 Jedec Code:   0x7fb0            EEPROM Version:    0x02
 P/N:          740-050037        S/N:               1EDB313009S
 Assembly ID:  0x0478            Assembly Version:  01.01
 Date:         05-17-2013        Assembly Flags:    0x00
 Version:      REV 01            CLEI Code:         IPUPAKRKAA
 ID: DC 52V Power Supply Module  FRU Model Number:  MX2000-PSM-DC-S
 Board Information Record:
  Address 0x00: ff ff ff ff ff ff ff ff ff ff ff ff ff ff ff ff
 I2C Hex Data:
  Address 0x00: 7f b0 02 ff 04 78 01 01 52 45 56 20 30 31 00 00
  Address 0x10: 00 00 00 00 37 34 30 2d 30 35 30 30 33 37 00 00
  Address 0x20: 31 45 44 42 33 31 33 30 30 39 53 00 00 11 05 07
  Address 0x30: dd ff ff ff ff ff ff ff ff ff ff ff ff ff ff ff
  Address 0x40: ff ff ff ff 01 49 50 55 50 41 4b 52 4b 41 41 4d
  Address 0x50: 58 32 30 30 30 2d 50 53 4d 2d 44 43 2d 53 00 00
  Address 0x60: 00 00 00 00 00 00 31 30 31 ff ff ff ff ff ff ff
  Address 0x70: ff ff ff 2a 00 00 00 00 00 00 00 00 00 00 00 00
PSM 7            REV 01   740-050037   1EDB313008E       DC 52V Power Supply
Module
```

```
 Jedec Code:   0x7fb0            EEPROM Version:    0x02
 P/N:          740-050037        S/N:               1EDB313008E
 Assembly ID:  0x0478            Assembly Version:  01.01
 Date:         05-17-2013        Assembly Flags:    0x00
 Version:      REV 01            CLEI Code:         IPUPAKRKAA
 ID: DC 52V Power Supply Module  FRU Model Number:  MX2000-PSM-DC-S
 Board Information Record:
  Address 0x00: ff ff ff ff ff ff ff ff ff ff ff ff ff ff ff ff
 I2C Hex Data:
  Address 0x00: 7f b0 02 ff 04 78 01 01 52 45 56 20 30 31 00 00
  Address 0x10: 00 00 00 00 37 34 30 2d 30 35 30 30 33 37 00 00
  Address 0x20: 31 45 44 42 33 31 33 30 30 38 45 00 00 11 05 07
  Address 0x30: dd ff ff ff ff ff ff ff ff ff ff ff ff ff ff ff
  Address 0x40: ff ff ff ff 01 49 50 55 50 41 4b 52 4b 41 41 4d
  Address 0x50: 58 32 30 30 30 2d 50 53 4d 2d 44 43 2d 53 00 00
  Address 0x60: 00 00 00 00 00 00 31 30 31 ff ff ff ff ff ff ff
  Address 0x70: ff ff ff 2a 00 00 00 00 00 00 00 00 00 00 00 00
PSM 8            REV 01   740-050037   1EDB3130063       DC 52V Power Supply
Module
 Jedec Code:   0x7fb0            EEPROM Version:    0x02
 P/N:          740-050037        S/N:               1EDB3130063
 Assembly ID:  0x0478            Assembly Version:  01.01
 Date:         05-17-2013        Assembly Flags:    0x00
 Version:      REV 01            CLEI Code:         IPUPAKRKAA
 ID: DC 52V Power Supply Module  FRU Model Number:  MX2000-PSM-DC-S
 Board Information Record:
  Address 0x00: ff ff ff ff ff ff ff ff ff ff ff ff ff ff ff ff
 I2C Hex Data:
  Address 0x00: 7f b0 02 ff 04 78 01 01 52 45 56 20 30 31 00 00
  Address 0x10: 00 00 00 00 37 34 30 2d 30 35 30 30 33 37 00 00
  Address 0x20: 31 45 44 42 33 31 33 30 30 36 33 00 00 11 05 07
  Address 0x30: dd ff ff ff ff ff ff ff ff ff ff ff ff ff ff ff
  Address 0x40: ff ff ff ff 01 49 50 55 50 41 4b 52 4b 41 41 4d
  Address 0x50: 58 32 30 30 30 2d 50 53 4d 2d 44 43 2d 53 00 00
  Address 0x60: 00 00 00 00 00 00 31 30 31 ff ff ff ff ff ff ff
  Address 0x70: ff ff ff 2a 00 00 00 00 00 00 00 00 00 00 00 00
PSM 12           REV 01   740-050037   1EDB3130026       DC 52V Power Supply
Module
 Jedec Code:   0x7fb0            EEPROM Version:    0x02
 P/N:          740-050037        S/N:               1EDB3130026
 Assembly ID:  0x0478            Assembly Version:  01.01
 Date:         05-16-2013        Assembly Flags:    0x00
 Version:      REV 01            CLEI Code:         IPUPAKRKAA
 ID: DC 52V Power Supply Module  FRU Model Number:  MX2000-PSM-DC-S
 Board Information Record:
  Address 0x00: ff ff ff ff ff ff ff ff ff ff ff ff ff ff ff ff
 I2C Hex Data:
  Address 0x00: 7f b0 02 ff 04 78 01 01 52 45 56 20 30 31 00 00
  Address 0x10: 00 00 00 00 37 34 30 2d 30 35 30 30 33 37 00 00
  Address 0x20: 31 45 44 42 33 31 33 30 30 32 36 00 00 10 05 07
  Address 0x30: dd ff ff ff ff ff ff ff ff ff ff ff ff ff ff ff
  Address 0x40: ff ff ff ff 01 49 50 55 50 41 4b 52 4b 41 41 4d
  Address 0x50: 58 32 30 30 30 2d 50 53 4d 2d 44 43 2d 53 00 00
  Address 0x60: 00 00 00 00 00 00 31 30 31 ff ff ff ff ff ff ff
  Address 0x70: ff ff ff 2a 00 00 00 00 00 00 00 00 00 00 00 00
PSM 13           REV 01   740-050037   1EDB3130074       DC 52V Power Supply
Module
 Jedec Code:   0x7fb0            EEPROM Version:    0x02
 P/N:          740-050037        S/N:               1EDB3130074
 Assembly ID:  0x0478            Assembly Version:  01.01
 Date:         05-17-2013        Assembly Flags:    0x00
```

```
 Version:      REV 01            CLEI Code:         IPUPAKRKAA
 ID: DC 52V Power Supply Module  FRU Model Number:  MX2000-PSM-DC-S
 Board Information Record:
  Address 0x00: ff ff ff ff ff ff ff ff ff ff ff ff ff ff ff ff
 I2C Hex Data:
  Address 0x00: 7f b0 02 ff 04 78 01 01 52 45 56 20 30 31 00 00
  Address 0x10: 00 00 00 00 37 34 30 2d 30 35 30 30 33 37 00 00
  Address 0x20: 31 45 44 42 33 31 33 30 30 37 34 00 00 11 05 07
  Address 0x30: dd ff ff ff ff ff ff ff ff ff ff ff ff ff ff ff
  Address 0x40: ff ff ff ff 01 49 50 55 50 41 4b 52 4b 41 41 4d
  Address 0x50: 58 32 30 30 30 2d 50 53 4d 2d 44 43 2d 53 00 00
  Address 0x60: 00 00 00 00 00 00 31 30 31 ff ff ff ff ff ff ff
  Address 0x70: ff ff ff 2a 00 00 00 00 00 00 00 00 00 00 00 00
PSM 14           REV 01   740-050037   1EDB313009D       DC 52V Power Supply
Module
 Jedec Code:   0x7fb0            EEPROM Version:    0x02
 P/N:          740-050037        S/N:               1EDB313009D
 Assembly ID:  0x0478            Assembly Version:  01.01
 Date:         05-17-2013        Assembly Flags:    0x00
 Version:      REV 01            CLEI Code:         IPUPAKRKAA
 ID: DC 52V Power Supply Module  FRU Model Number:  MX2000-PSM-DC-S
 Board Information Record:
  Address 0x00: ff ff ff ff ff ff ff ff ff ff ff ff ff ff ff ff
 I2C Hex Data:
  Address 0x00: 7f b0 02 ff 04 78 01 01 52 45 56 20 30 31 00 00
  Address 0x10: 00 00 00 00 37 34 30 2d 30 35 30 30 33 37 00 00
  Address 0x20: 31 45 44 42 33 31 33 30 30 39 44 00 00 11 05 07
  Address 0x30: dd ff ff ff ff ff ff ff ff ff ff ff ff ff ff ff
  Address 0x40: ff ff ff ff 01 49 50 55 50 41 4b 52 4b 41 41 4d
  Address 0x50: 58 32 30 30 30 2d 50 53 4d 2d 44 43 2d 53 00 00
  Address 0x60: 00 00 00 00 00 00 31 30 31 ff ff ff ff ff ff ff
  Address 0x70: ff ff ff 2a 00 00 00 00 00 00 00 00 00 00 00 00
PSM 15           REV 01   740-050037   1EDB3130024       DC 52V Power Supply
Module
 Jedec Code:   0x7fb0            EEPROM Version:    0x02
 P/N:          740-050037        S/N:               1EDB3130024
 Assembly ID:  0x0478            Assembly Version:  01.01
 Date:         05-16-2013        Assembly Flags:    0x00
 Version:      REV 01            CLEI Code:         IPUPAKRKAA
 ID: DC 52V Power Supply Module  FRU Model Number:  MX2000-PSM-DC-S
 Board Information Record:
  Address 0x00: ff ff ff ff ff ff ff ff ff ff ff ff ff ff ff ff
 I2C Hex Data:
  Address 0x00: 7f b0 02 ff 04 78 01 01 52 45 56 20 30 31 00 00
...
```

show chassis hardware models (MX2020 Routers with MPC5EQ and MPC6E)

```
user@host> show chassis hardware models
Hardware inventory:
Item             Version  Part number  Serial number     FRU model number
Midplane         REV 51   750-040240   ABAB9243          CHAS-BP-MX2020-S
FPM Board        REV 13   760-040242   ABCA8835          MX2020-CRAFT-S
PSM 0            REV 01   740-050037   1EDB32403L5       MX2000-PSM-DC-S
PSM 1            REV 01   740-050037   1EDB32403L3       MX2000-PSM-DC-S
PSM 2            REV 01   740-050037   1EDB32403KM       MX2000-PSM-DC-S
PSM 3            REV 01   740-050037   1EDB3130079       MX2000-PSM-DC-S
PSM 4            REV 01   740-050037   1EDB3130077       MX2000-PSM-DC-S
PSM 5            REV 01   740-050037   1EDB3130020       MX2000-PSM-DC-S
PSM 6            REV 01   740-050037   1EDB313009S       MX2000-PSM-DC-S
PSM 7            REV 01   740-050037   1EDB313008E       MX2000-PSM-DC-S
```

```
PSM 8            REV 01   740-050037   1EDB3130063       MX2000-PSM-DC-S
PSM 12           REV 01   740-050037   1EDB3130026       MX2000-PSM-DC-S
PSM 13           REV 01   740-050037   1EDB3130074       MX2000-PSM-DC-S
PSM 14           REV 01   740-050037   1EDB313009D       MX2000-PSM-DC-S
PSM 15           REV 01   740-050037   1EDB3130024       MX2000-PSM-DC-S
PSM 16           REV 01   740-050037   1EDB3130054       MX2000-PSM-DC-S
PSM 17           REV 01   740-050037   1EDB3130080       MX2000-PSM-DC-S
PDM 0            REV 03   740-045234   1EGA3170144       MX2000-PDM-DC-S
PDM 1            REV 03   740-045234   1EGA3170158       MX2000-PDM-DC-S
PDM 2            REV 03   740-045234   1EGA3170182       MX2000-PDM-DC-S
PDM 3            REV 03   740-045234   1EGA3170207       MX2000-PDM-DC-S
Routing Engine 0 REV 02   740-041821   9009112112        RE-MX2000-1800X4-S
Routing Engine 1 REV 02   740-041821   9009112087        RE-MX2000-1800X4-S
CB 0             REV 23   750-040257   CABA2295          RE-MX2000-1800X4-S
CB 1             REV 23   750-040257   CABE8379          RE-MX2000-1800X4-S
SFB 0            REV 06   711-044466   ABCD5001          MX2000-SFB-S
SFB 1            REV 06   711-044466   ABCD5034          MX2000-SFB-S
SFB 2            REV 06   711-044466   ABCH3899          MX2000-SFB-S
SFB 3            REV 06   711-044466   ABCD5020          MX2000-SFB-S
SFB 4            REV 06   711-044466   ABCD4975          MX2000-SFB-S
SFB 5            REV 06   711-044466   ABCH3881          MX2000-SFB-S
SFB 6            REV 06   711-044466   ABCD5026          MX2000-SFB-S
SFB 7            REV 06   711-044466   ABCD5032          MX2000-SFB-S
FPC 0            REV 39   750-045715   CACD1902          PROTO-ASSEMBLY
FPC 1            REV 11   750-045372   CABK8112          MX-MPC3E-3D
FPC 2            REV 17   750-037355   CAAS5826          MPC4E-3D-2CGE-8XGE
FPC 3            REV 05   750-044444   CAAY9920          MX-MPC2E-3D-P
FPC 4            REV 18   750-046005   CACH5661          PROTO-ASSEMBLY
FPC 5            REV 35   750-028467   CAAR2623          MPC-3D-16XGE-SFPP
FPC 9            REV 30   750-044130   ABCF5773          PROTO-ASSEMBLY
FPC 10           REV 36   750-044130   ABCS8602          PROTO-ASSEMBLY
FPC 17           REV 28   750-044130   ABBZ3873          PROTO-ASSEMBLY
FPC 18           REV 39   750-045715   CACD1910          PROTO-ASSEMBLY
FPC 19           REV 39   750-045715   CACD1908          PROTO-ASSEMBLY
ADC 0            REV 17   750-043596   ABCD5378          MX2000-LC-ADAPTER
ADC 1            REV 17   750-043596   ABCD5465          MX2000-LC-ADAPTER
ADC 2            REV 17   750-043596   ABCD5431          MX2000-LC-ADAPTER
ADC 3            REV 17   750-043596   ABCD5356          MX2000-LC-ADAPTER
ADC 4            REV 02   750-043596   ZW1545            750-043596
ADC 5            REV 17   750-043596   ABCD5517          MX2000-LC-ADAPTER
ADC 18           REV 17   750-043596   ABCD5535          MX2000-LC-ADAPTER
ADC 19           REV 01   750-043596   ZV4127            750-043596
Fan Tray 0       REV 06   760-046960   ACAY0791          MX2000-FANTRAY-S
Fan Tray 1       REV 06   760-046960   ACAY0788          MX2000-FANTRAY-S
Fan Tray 2       REV 06   760-046960   ACAY0755          MX2000-FANTRAY-S
Fan Tray 3       REV 06   760-046960   ACAY0441          MX2000-FANTRAY-S
```

show chassis hardware clei-models (MX2020 Router with MPC5EQ and MPC6E)

```
user@host> show chassis hardware clei-models
Hardware inventory:
Item             Version  Part number  CLEI code         FRU model number
Midplane         REV 51   750-040240   IPMU710ARA        CHAS-BP-MX2020-S
FPM Board        REV 13   760-040242   IPMYAE5JRA        MX2020-CRAFT-S
PSM 0            REV 01   740-050037   IPUPAKRKAA        MX2000-PSM-DC-S
PSM 1            REV 01   740-050037   IPUPAKRKAA        MX2000-PSM-DC-S
PSM 2            REV 01   740-050037   IPUPAKRKAA        MX2000-PSM-DC-S
PSM 3            REV 01   740-050037   IPUPAKRKAA        MX2000-PSM-DC-S
PSM 4            REV 01   740-050037   IPUPAKRKAA        MX2000-PSM-DC-S
PSM 5            REV 01   740-050037   IPUPAKRKAA        MX2000-PSM-DC-S
PSM 6            REV 01   740-050037   IPUPAKRKAA        MX2000-PSM-DC-S
```

```
PSM 7            REV 01   740-050037   IPUPAKRKAA        MX2000-PSM-DC-S
PSM 8            REV 01   740-050037   IPUPAKRKAA        MX2000-PSM-DC-S
PSM 12           REV 01   740-050037   IPUPAKRKAA        MX2000-PSM-DC-S
PSM 13           REV 01   740-050037   IPUPAKRKAA        MX2000-PSM-DC-S
PSM 14           REV 01   740-050037   IPUPAKRKAA        MX2000-PSM-DC-S
PSM 15           REV 01   740-050037   IPUPAKRKAA        MX2000-PSM-DC-S
PSM 16           REV 01   740-050037   IPUPAKRKAA        MX2000-PSM-DC-S
PSM 17           REV 01   740-050037   IPUPAKRKAA        MX2000-PSM-DC-S
PDM 0            REV 03   740-045234   IPUPAJSKAA        MX2000-PDM-DC-S
PDM 1            REV 03   740-045234   IPUPAJSKAA        MX2000-PDM-DC-S
PDM 2            REV 03   740-045234   IPUPAJSKAA        MX2000-PDM-DC-S
PDM 3            REV 03   740-045234   IPUPAJSKAA        MX2000-PDM-DC-S
CB 0             REV 23   750-040257   IPUCBA7CTA        RE-MX2000-1800X4-S
CB 1             REV 23   750-040257   IPUCBA7CTA        RE-MX2000-1800X4-S
SFB 0            REV 06   711-044466   IPUCBA6CAA        MX2000-SFB-S
SFB 1            REV 06   711-044466   IPUCBA6CAA        MX2000-SFB-S
SFB 2            REV 06   711-044466   IPUCBA6CAA        MX2000-SFB-S
SFB 3            REV 06   711-044466   IPUCBA6CAA        MX2000-SFB-S
SFB 4            REV 06   711-044466   IPUCBA6CAA        MX2000-SFB-S
SFB 5            REV 06   711-044466   IPUCBA6CAA        MX2000-SFB-S
SFB 6            REV 06   711-044466   IPUCBA6CAA        MX2000-SFB-S
SFB 7            REV 06   711-044466   IPUCBA6CAA        MX2000-SFB-S
FPC 0            REV 39   750-045715   PROTOXCLEI        PROTO-ASSEMBLY
FPC 1            REV 11   750-045372   COUIBBNBAA        MX-MPC3E-3D
FPC 2            REV 17   750-037355   IPU3A4DHAA        MPC4E-3D-2CGE-8XGE
FPC 3            REV 05   750-044444   COUIBBGBAA        MX-MPC2E-3D-P
  MIC 0          REV 28   750-028387   COUIA16BAA        MIC-3D-4XGE-XFP
FPC 4            REV 18   750-046005   PROTOXCLEI        PROTO-ASSEMBLY
FPC 5            REV 35   750-028467                     MPC-3D-16XGE-SFPP
FPC 9            REV 30   750-044130   PROTOXCLEI        PROTO-ASSEMBLY
  MIC 0          REV 05   750-049457   PROTOXCLEI        PROTO-ASSEMBLY
FPC 10           REV 36   750-044130   PROTOXCLEI        PROTO-ASSEMBLY
  MIC 0          REV 06   750-049979   PROTOXCLEI        PROTO-ASSEMBLY
  MIC 1          REV 12   750-050008   PROTOXCLEI        PROTO-ASSEMBLY
FPC 17           REV 28   750-044130   PROTOXCLEI        PROTO-ASSEMBLY
  MIC 1          REV 03   750-050008   PROTOXCLEI        PROTO-ASSEMBLY
FPC 18           REV 39   750-045715   PROTOXCLEI        PROTO-ASSEMBLY
FPC 19           REV 39   750-045715   PROTOXCLEI        PROTO-ASSEMBLY
ADC 0            REV 17   750-043596   IPUCBA8CAA        MX2000-LC-ADAPTER
ADC 1            REV 17   750-043596   IPUCBA8CAA        MX2000-LC-ADAPTER
ADC 2            REV 17   750-043596   IPUCBA8CAA        MX2000-LC-ADAPTER
ADC 3            REV 17   750-043596   IPUCBA8CAA        MX2000-LC-ADAPTER
ADC 4            REV 02   750-043596   PROTOXCLEI        750-043596
ADC 5            REV 17   750-043596   IPUCBA8CAA        MX2000-LC-ADAPTER
ADC 18           REV 17   750-043596   IPUCBA8CAA        MX2000-LC-ADAPTER
ADC 19           REV 01   750-043596   PROTOXCLEI        750-043596
Fan Tray 0       REV 06   760-046960   IPUCBA5CAA        MX2000-FANTRAY-S
Fan Tray 1       REV 06   760-046960   IPUCBA5CAA        MX2000-FANTRAY-S
Fan Tray 2       REV 06   760-046960   IPUCBA5CAA        MX2000-FANTRAY-S
Fan Tray 3       REV 06   760-046960   IPUCBA5CAA        MX2000-FANTRAY-S
```

show chassis hardware (MX Series routers with ATM MIC)

```
user@host> show chassis hardware
Hardware inventory:
Item             Version  Part number  Serial number     Description
Chassis                                JN115736EAFC      MX240
Midplane         REV 07   760-021404   ABAA5038          MX240 Backplane
FPM Board        REV 03   760-021392   ABBA2758          Front Panel Display
PEM 0            Rev 01   740-022697   QCS0937C07K       PS 1.2-1.7kW; 100-240V
```

```
AC in
PEM 1            Rev 01   740-022697   QCS0939C04X       PS 1.2-1.7kW; 100-240V
AC in
PEM 2            Rev 01   740-022697   QCS0937C06B       PS 1.2-1.7kW; 100-240V
AC in
PEM 3            Rev 01   740-022697   QCS0937C07U       PS 1.2-1.7kW; 100-240V
AC in
Routing Engine 0 REV 12   740-013063   9009042291        RE-S-2000
Routing Engine 1 REV 12   740-013063   9009042266        RE-S-2000
CB 0             REV 06   710-021523   ABBC1435          MX SCB
CB 1             REV 06   710-021523   ABBC1497          MX SCB
FPC 2     REV 14   750-031088   YH8446            MPC Type 2 3D Q
  CPU            REV 06   711-030884   YH9612            MPC PMB 2G
  MIC 0
  MIC 1          REV 10   750-036132   ZP7062            2xOC12/8xOC3 CC-CE
    PIC 2                 BUILTIN      BUILTIN           2xOC12/8xOC3 CC-CE

  Xcvr 0              NON-JNPR     23393-00492       UNKNOWN
      Xcvr 1              NON-JNPR     23393-00500       UNKNOWN
      Xcvr 2              NON-JNPR     23393-00912       UNKNOWN
      Xcvr 3     REV 01   740-015638   22216-00575       Load SFP
      Xcvr 4     REV 01   740-015638   24145-00110       Load SFP
      Xcvr 5     REV 01   740-015638   24145-00016       Load SFP
      Xcvr 6     REV 01   740-015638   24145-00175       Load SFP
      Xcvr 7              NON-JNPR     23393-00627       UNKNOWN
  QXM 0          REV 05   711-028408   YF4681            MPC QXM
  QXM 1          REV 05   711-028408   YF4817            MPC QXM
Fan Tray 0       REV 01   710-021113   XL3645            MX240 Fan Tray
```

show chassis hardware (MX240, MX480, MX960 routers with Application Services Modular Line Card)

```
user@host>show chassis hardware
Hardware inventory:
Item             Version  Part number  Serial number     Description
Chassis                                JN11D969BAFA      MX960
Midplane         REV 03   710-013698   ACAA2362          MX960 Backplane
FPM Board        REV 03   710-014974   ZR0639            Front Panel Display
PDM             Rev 03   740-013110   QCS152250SX       Power Distribution Module
PEM 0            Rev 10   740-013683   QCS1512718W       DC Power Entry Module
PEM 1            Rev 10   740-013683   QCS1512702Y       DC Power Entry Module
Routing Engine 0 REV 15   740-013063   9012024667        RE-S-2000
Routing Engine 1 REV 15   740-013063   9012024649        RE-S-2000
CB 0             REV 14   750-031391   ZJ7749            Enhanced MX SCB
CB 1             REV 14   750-031391   ZJ7750            Enhanced MX SCB
CB 2             REV 14   750-031391   ZY9233            Enhanced MX SCB
FPC 0            REV 17   750-031089   YR7434            MPC Type 2 3D
  CPU
FPC 1            REV 11   750-037207   ZW9727            AS-MCC
  CPU            REV 04   711-038173   ZW4817            AS-MCC-PMB
  MIC 0          REV 01   750-037214   ZH3764            AS-MSC
    PIC 0                 BUILTIN      BUILTIN           AS-MSC
  MIC 1          REV 01   711-028408   JZ9200            AS-MXC
    PIC 2                 BUILTIN      BUILTIN           AS-MXC
FPC 4            REV 30   750-028467   ABBN0232          MPC 3D 16x 10GE
  CPU
FPC 5            REV 04   750-037207   ZK9074            AS-MCC
  CPU
Fan Tray 0       REV 05   740-014971   VT5683            Fan Tray
Fan Tray 1       REV 05   740-014971   VT5684            Fan Tray
```

show chassis hardware extensive (MX240, MX480, MX960 Routers with Application Services Modular Line Card)

```
user@host> show chassis hardware extensive

ID: AS-MCC                      FRU Model Number:  750-037207
 Board Information Record:
  Address 0x00: ff ff ff ff ff ff ff ff ff ff ff ff ff ff ff ff  I2C Hex Data:
  Address 0x00: 7f b0 02 ff 0b 37 01 0b 52 45 56 20 31 31 00 00
  Address 0x10: 00 00 00 00 37 35 30 2d 30 33 37 32 30 37 00 00
  Address 0x20: 53 2f 4e 20 5a 57 39 37 32 37 00 00 00 11 02 07
  Address 0x30: dc ff ff ff ff ff ff ff ff ff ff ff ff ff ff ff
  Address 0x40: ff ff ff ff 01 50 52 4f 54 4f 58 43 4c 45 49 37
  Address 0x50: 35 30 2d 30 33 37 32 30 37 00 00 00 00 00 00 00
  Address 0x60: 00 00 00 00 00 00 31 31 00 ff ff ff ff ff ff ff
  Address 0x70: ff ff ff 5e ff ff ff ff ff ff ff ff ff ff ff ff
  CPU            REV 04   711-038173   ZW4817            AS-MCC-PMB
 Jedec Code:   0x7fb0            EEPROM Version:    0x02
 P/N:          711-038173        S/N:               ZW4817
 Assembly ID:  0x0b38            Assembly Version:  01.04
 Date:         12-30-2011        Assembly Flags:    0x00
 Version:      REV 04
 ID: AS-MCC-PMB
 Board Information Record:
  Address 0x00: ff ff ff ff ff ff ff ff ff ff ff ff ff ff ff ff  I2C Hex Data:
  Address 0x00: 7f b0 02 ff 0b 38 01 04 52 45 56 20 30 34 00 00
  Address 0x10: 00 00 00 00 37 31 31 2d 30 33 38 31 37 33 00 00
  Address 0x20: 53 2f 4e 20 5a 57 34 38 31 37 00 00 00 1e 0c 07
  Address 0x30: db ff ff ff ff ff ff ff ff ff ff ff ff ff ff ff
  Address 0x40: ff ff ff ff 00 50 52 4f 54 4f 58 43 4c 45 49 37
  Address 0x50: 31 31 2d 30 33 38 31 37 33 00 00 00 00 00 00 00
  Address 0x60: 00 00 00 00 00 00 30 34 00 ff ff ff ff ff ff ff
  Address 0x70: ff ff ff 60 00 00 00 00 00 00 00 00 00 00 00 00
  MIC 0          REV 01   750-037214   ZH3764            AS-MSC
 Jedec Code:   0x7fb0            EEPROM Version:    0x02
 P/N:          750-037214        S/N:               ZH3764
 Assembly ID:  0x0a44            Assembly Version:  01.01
 Date:         07-04-2011        Assembly Flags:    0x00
 Version:      REV 01
 ID: AS-MSC
 Board Information Record:
  Address 0x00: ff ff ff ff ff ff ff ff ff ff ff ff ff ff ff ff  I2C Hex Data:
  Address 0x00: 7f b0 02 ff 0a 44 01 01 52 45 56 20 30 31 00 00
  Address 0x10: 00 00 00 00 37 35 30 2d 30 33 37 32 31 34 00 00
  Address 0x20: 53 2f 4e 20 5a 48 33 37 36 34 00 00 00 04 07 07
  Address 0x30: db ff ff ff ff ff ff ff ff ff ff ff ff ff ff ff
  Address 0x40: ff ff ff ff 00 00 00 00 00 00 00 00 00 00 00 00
  Address 0x50: 00 00 00 00 00 00 00 00 00 00 00 00 00 00 00 00
  Address 0x60: 00 00 00 00 00 00 00 00 00 ff ff ff ff ff ff ff
  Address 0x70: ff ff ff f6 c0 03 e1 bc 00 00 00 00 00 00 00 00
    PIC 0                BUILTIN      BUILTIN           AS-MSC
FPC 4            REV 30   750-028467   ABBN0232          MPC 3D 16x 10GE
 Jedec Code:   0x7fb0            EEPROM Version:    0x01
```

show chassis hardware (MX480 Router with MPC4E)

```
user@host> show chassis hardware
Hardware inventory:
Item             Version  Part number  Serial number     Description
Chassis                                JN10FF57BAFB      MX480
```

```
Midplane         REV 05   750-047849   Good              MX480 Midplane
FPM Board        REV 02   710-017254   KG2066            Front Panel Display
PEM 0            Rev 03   740-017330   QCS081590BJ       PS 1.2-1.7kW; 100-240V
AC in
PEM 1            Rev 03   740-017330   QCS0815908Z       PS 1.2-1.7kW; 100-240V
AC in
PEM 2            Rev 03   740-029970   QCS1001U001       PS 1.4-2.52kW; 90-264V
AC in
Routing Engine 0 REV 05   740-031116   9009089502        RE-S-1800x4
Routing Engine 1 REV 05   740-031116   9009089624        RE-S-1800x4
CB 0             REV 02   750-031391   YE8506            Enhanced MX SCB
CB 1             REV 14   750-031391   ZK8265            Enhanced MX SCB
FPC 2            REV 05   750-037358   ZT0638            MPC4E 3D 32XGE
  CPU            REV 07   711-035209   ZK3187            HMPC PMB 2G
  PIC 0                   BUILTIN      BUILTIN           8X10GE SFPP
  PIC 1                   BUILTIN      BUILTIN           8X10GE SFPP
  PIC 2                   BUILTIN      BUILTIN           8X10GE SFPP
  PIC 3                   BUILTIN      BUILTIN           8X10GE SFPP
FPC 3            REV 06   750-037355   CAAB1144          MPC4E 3D 2CGE+8XGE
  CPU            REV 08   711-035209   CAAB1278          HMPC PMB 2G
  PIC 0                   BUILTIN      BUILTIN           4x10GE SFPP
    Xcvr 0       REV 01   740-031980   B11E01439         SFP+-10G-SR
    Xcvr 1       REV 01   740-031980   B11D05809         SFP+-10G-SR
  PIC 1                   BUILTIN      BUILTIN           1X100GE CFP
    Xcvr 0                NON-JNPR     D5418             UNKNOWN
  PIC 2                   BUILTIN      BUILTIN           4x10GE SFPP
  PIC 3                   BUILTIN      BUILTIN           1X100GE CFP
    Xcvr 0                NON-JNPR     X12J00362         CFP-100G-SR10
FPC 4            REV 12.3.10 750-033205 YR9445           MPCE Type 3 3D
  CPU
Fan Tray                                                 Enhanced Left Fan Tray
```

show chassis hardware (MX2020 Router with MPC4E)

```
user@host> show chassis hardware
Hardware inventory:
Item             Version  Part number  Serial number     Description
Chassis                                JN11E188CAFJ      MX2020
Midplane         REV 04   711-032387   ABAC7474          Lower Backplane
Midplane 1       REV 04   711-032386   ABAC7408          Upper Backplane
PMP 1            REV 03   711-032428   ACAJ1137          Upper Power Midplane
PMP 0            REV 03   711-032426   ACAJ1016          Lower Power Midplane
FPM Board        REV 06   760-040242   ABBT8832          Front Panel Display
PSM 3            REV 0C   740-033727   VK00255           DC 52V Power Supply
Module
PSM 4            REV 0C   740-033727   VJ00148           DC 52V Power Supply
Module
PSM 5            REV 0C   740-033727   VK00207           DC 52V Power Supply
Module
PSM 6            REV 0C   740-033727   VK00319           DC 52V Power Supply
Module
PSM 7            REV 0C   740-033727   VK00264           DC 52V Power Supply
Module
PSM 8            REV 0B   740-033727   VG00025           DC 52V Power Supply
Module
PSM 13           REV 0C   740-033727   VK00274           DC 52V Power Supply
Module
PSM 14           REV 0C   740-033727   VJ00167           DC 52V Power Supply
Module
PSM 15           REV 0C   740-033727   VK00299           DC 52V Power Supply
Module
```

```
PSM 16           REV 0C   740-033727   VK00213          DC 52V Power Supply
Module
PSM 17           REV 0C   740-033727   VK00253          DC 52V Power Supply
Module
PDM 0            REV 0B   740-038109   VJ00040          DC Power Dist Module
PDM 2            REV 0B   740-038109   VJ00025          DC Power Dist Module
Routing Engine 0 REV 02   740-041821   9009089735       RE-S-1800x4
Routing Engine 1 REV 02   740-041821   9009089731       RE-S-1800x4
CB 0             REV 04   750-040257   ZT2846           Control Board
CB 1             REV 04   750-040257   ZT2877           Control Board
SPMB 0           REV 01   711-041855   ZS2282           PMB Board
SPMB 1           REV 01   711-041855   ZS2261           PMB Board
SFB 0            REV 07   711-032385   ZZ2582           Switch Fabric Board
SFB 1            REV 04   711-032385   ZV4229           Switch Fabric Board
SFB 2            REV 07   711-032385   CAAB4902         Switch Fabric Board
SFB 3            REV 07   711-032385   CAAB4891         Switch Fabric Board
SFB 4            REV 07   711-032385   CAAB4883         Switch Fabric Board
SFB 5            REV 07   711-032385   CAAB4889         Switch Fabric Board
SFB 6            REV 06   711-032385   ZV1818           Switch Fabric Board
SFB 7            REV 07   711-032385   CAAB4897         Switch Fabric Board
FPC 0            REV 34   750-031090   ZT9799           MPC Type 2 3D EQ
  CPU            REV 06   711-030884   ZS1122           MPC PMB 2G
  MIC 0          REV 11   750-033535   CAAD7674         MIC-3D-10C192-XFP
    PIC 0                 BUILTIN      BUILTIN          MIC-3D-10C192-XFP
      Xcvr 0     REV 01   740-014279   753019A00404     XFP-OC192-SR
  MIC 1          REV 14   750-031967   ZM6103           MIC-3D-8OC3OC12-4OC48
    PIC 2                 BUILTIN      BUILTIN          MIC-3D-8OC3OC12-4OC48
      Xcvr 0     REV 01   740-011615   PEF1AZP          SFP-IR
      Xcvr 1     REV 01   740-011615   PEF1AZN          SFP-IR
      Xcvr 2     REV 01   740-021308   ANA0N8S          SFP+-10G-SR
  QXM 0          REV 06   711-028408   ZT9339           MPC QXM
  QXM 1          REV 06   711-028408   ZT9237           MPC QXM
FPC 9            REV 34   750-031090   ZT9770           MPC Type 2 3D EQ
  CPU            REV 06   711-030884   ZS1302           MPC PMB 2G
  MIC 0          REV 24   750-028387   YJ3950           3D 4x 10GE  XFP
    PIC 0                 BUILTIN      BUILTIN          2x 10GE  XFP
      Xcvr 0               NON-JNPR     T09M52516        XFP-10G-SR
      Xcvr 1               NON-JNPR     CA49BK095        XFP-10G-SR
    PIC 1                 BUILTIN      BUILTIN          2x 10GE  XFP
      Xcvr 0     REV 02   740-014289   C834XU01T        XFP-10G-SR
      Xcvr 1               NON-JNPR     T09M52515        XFP-10G-SR
  MIC 1          REV 11   750-033535   CAAD7681         MIC-3D-10C192-XFP
    PIC 2                 BUILTIN      BUILTIN          MIC-3D-10C192-XFP
      Xcvr 0     REV 01   740-014279   KBQ02BE          XFP-OC192-SR
  QXM 0          REV 06   711-028408   ZT9151           MPC QXM
  QXM 1          REV 06   711-028408   ZT9116           MPC QXM
FPC 10           REV 27   750-033205   ZL6215           MPCE Type 3 3D
  CPU            REV 07   711-035209   ZK9038           HMPC PMB 2G
  MIC 0          REV 18   750-028380   YG6885           3D 2x 10GE XFP
    PIC 0                 BUILTIN      BUILTIN          1x 10GE XFP
      Xcvr 0     REV 01   740-014289   C706XU0AG        XFP-10G-SR
    PIC 1                 BUILTIN      BUILTIN          1x 10GE XFP
      Xcvr 0     REV 02   740-014289   T08L84366        XFP-10G-SR
FPC 14           REV 09   750-037355   CAAF1534         MPC4E 3D 2CGE+8XGE
  CPU            REV 08   711-035209   CAAB9879         HMPC PMB 2G
  PIC 0                   BUILTIN      BUILTIN          4x10GE SFPP
    Xcvr 0       REV 01   740-021308   21T511100436     SFP+-10G-SR
    Xcvr 1       REV 01   740-031980   AHP0GPM          SFP+-10G-SR
    Xcvr 2       REV 01   740-031980   123363A00032     SFP+-10G-SR
    Xcvr 3       REV 01   740-021308   19T511100477     SFP+-10G-SR
  PIC 1                   BUILTIN      BUILTIN          1X100GE CFP
```

```
    Xcvr 0                NON-JNPR     X12J00260         CFP-100G-SR10
  PIC 2                   BUILTIN      BUILTIN           4x10GE SFPP
    Xcvr 0       REV 01   740-021308   21T511104086      SFP+-10G-SR
    Xcvr 1       REV 01   740-021308   21T511104627      SFP+-10G-SR
    Xcvr 3       REV 01   740-021308   21T511104644      SFP+-10G-SR
  PIC 3                   BUILTIN      BUILTIN           1X100GE CFP
FPC 19           REV 32   750-028467   ZR2008            MPC 3D 16x 10GE
  CPU            REV 10   711-029089   ZT6933            AMPC PMB
  PIC 0                   BUILTIN      BUILTIN           4x 10GE(LAN) SFP+
    Xcvr 0       REV 01   740-021308   19T511100291      SFP+-10G-SR
    Xcvr 1       REV 01   740-021308   AMH02VE           SFP+-10G-SR
  PIC 1                   BUILTIN      BUILTIN           4x 10GE(LAN) SFP+
    Xcvr 0       REV 01   740-021308   23T511102128      SFP+-10G-SR
  PIC 2                   BUILTIN      BUILTIN           4x 10GE(LAN) SFP+
    Xcvr 0       REV 01   740-021308   AMS15PP           SFP+-10G-SR
  PIC 3                   BUILTIN      BUILTIN           4x 10GE(LAN) SFP+
    Xcvr 0       REV 01   740-031980   123363A00716      SFP+-10G-SR
ADC 0            REV 05   750-043596   CAAC2072          Adapter Card
ADC 9            REV 01   750-043596   ZV4111            Adapter Card
ADC 10           REV 05   750-043596   CAAC2058          Adapter Card
ADC 14           REV 02   750-043596   ZW1561            Adapter Card
ADC 19           REV 01   750-043596   ZV4127            Adapter Card
Fan Tray 0       REV 03   760-046960   ACAY0124          172mm FanTray - 6 Fans
Fan Tray 1       REV 2A   760-046960   ACAY0022          172mm FanTray - 6 Fans
Fan Tray 2       REV 2A   760-046960   ACAY0023          172mm FanTray - 6 Fans
Fan Tray 3       REV 2A   760-046960   ACAY0025          172mm FanTray - 6 Fans
```

show chassis hardware (MX5, MX10, MX40, MX80, MX240, MX480, and MX960 Routers with Enhanced 20-Port Gigabit Ethernet MIC)

```
user@host> show chassis hardware
Hardware inventory:
Item             Version  Part number  Serial number     Description
Chassis                                F3434             MX80-P
Midplane         REV 01   711-044315   ZK2681            MX80-P
PEM 0            Rev 04   740-028288   VE05267           AC Power Entry Module
PEM 1            Rev 04   740-028288   VE05270           AC Power Entry Module
Routing Engine            BUILTIN      BUILTIN           Routing Engine
TFEB 0                    BUILTIN      BUILTIN           Forwarding Engine
Processor
  QXM 0          REV 05   711-028408   ZK0952            MPC QXM
FPC 0                     BUILTIN      BUILTIN           MPC BUILTIN
  MIC 0                   BUILTIN      BUILTIN           4x 10GE XFP
    PIC 0                 BUILTIN      BUILTIN           4x 10GE XFP
FPC 1                     BUILTIN      BUILTIN           MPC BUILTIN
  MIC 0          REV 02   750-049846   CAAV2153          3D 20x 1GE(LAN)-E,SFP
    PIC 0                 BUILTIN      BUILTIN           10x 1GE(LAN) -E  SFP
      Xcvr 0     REV 01   740-011613   AM0816S9B81       SFP-SX
      Xcvr 1     REV 02   740-011613   AM0925SBLK7       SFP-SX
      Xcvr 2     REV 01   740-011613   UAQ0005           SFP-SX
      Xcvr 3     REV 01   740-011613   UAQ000C           SFP-SX
      Xcvr 4     REV 01   740-011613   P9F195E           SFP-SX
      Xcvr 5     REV 01   740-011613   UAQ0003           SFP-SX
      Xcvr 6     REV 01   740-031851   AM1041SU1LD       SFP-SX
      Xcvr 8     REV 02   740-013111   B101501           SFP-T
    PIC 1                 BUILTIN      BUILTIN           10x 1GE(LAN) -E  SFP
      Xcvr 0     REV 01   740-011613   PFM1ML7           SFP-SX
      Xcvr 4     REV 01   740-011613   PE729P6           SFP-SX
      Xcvr 6     REV 02   740-011613   AM1014SGC84       SFP-SX
      Xcvr 9     REV 01   740-011613   AM0812S8UK3       SFP-SX
  MIC 1          REV 26   750-028392   ZY0187            3D 20x 1GE(LAN) SFP
```

```
    PIC 2                 BUILTIN      BUILTIN           10x 1GE(LAN) SFP
      Xcvr 0     REV 01   740-011613   P9F1AN9           SFP-SX
      Xcvr 5     REV 02   740-011613   AM1003SFUF4       SFP-SX
      Xcvr 9     REV 01   740-031851   AM1041SU1LM       SFP-SX
    PIC 3                 BUILTIN      BUILTIN           10x 1GE(LAN) SFP
      Xcvr 4     REV 01   740-011613   PAJ4MYT           SFP-SX
      Xcvr 7     +        NON-JNPR     XG32A024          SFP-SX
      Xcvr 8              NON-JNPR     PFR0V6J           SFP-SX
      Xcvr 9     REV 01   740-031851   AM1041SU02U       SFP-SX
Fan Tray
```

show chassis hardware models (MX5, MX10, MX40, MX80, MX240, MX480, and MX960 Routers with Enhanced 20-Port Gigabit Ethernet MIC)

```
user@host> show chassis hardware models
Hardware inventory:
Item             Version  Part number  Serial number     FRU model number
PEM 0            Rev 04   740-028288   VE05267           PWR-MX80-AC-S
PEM 1            Rev 04   740-028288   VE05270           PWR-MX80-AC-S
Routing Engine            BUILTIN      BUILTIN
TFEB 0                    BUILTIN      BUILTIN
FPC 0                     BUILTIN      BUILTIN
FPC 1                     BUILTIN      BUILTIN
  MIC 0          REV 02   750-049846   CAAV2153          MIC-3D-20GE-SFP-E
  MIC 1          REV 26   750-028392   ZY0187            MIC-3D-20GE-SFP
Fan Tray                                                  FANTRAY-MX80-S
```

show chassis hardware (MX2008 Router)

```
user@host>show chassis hardware
Hardware inventory:
Item             Version  Part number  Serial number     Description
Chassis                                JN1259E1CAFL      MX2008
Midplane         REV 47   750-044636   ABAD1739          Lower Backplane
PMP              REV 01   711-051406   ACVD0738          Power Midplane
FPM Board        REV 02   760-068193   ABDG7408          Front Panel Display
PSM 1            REV 06   740-050037   1EDB61200R8       DC 52V Power Supply
Module
PSM 2            REV 06   740-050037   1EDB61200WA       DC 52V Power Supply
Module
PSM 3            REV 06   740-050037   1EDB61200NY       DC 52V Power Supply
Module
PSM 4            REV 06   740-050037   1EDB61200N2       DC 52V Power Supply
Module
PSM 5            REV 06   740-050037   1EDB61200RN       DC 52V Power Supply
Module
PSM 6            REV 06   740-050037   1EDB61200RF       DC 52V Power Supply
Module
PSM 7            REV 06   740-050037   1EDB61200R7       DC 52V Power Supply
Module
PDM 0            REV 01   740-060189   1EFF5250143       DC PDM Optimized
PDM 1            REV 01   740-060189   1EFF5250074       DC PDM Optimized
Routing Engine 0          BUILTIN      BUILTIN           RE-S-2X00x8
Routing Engine 1          BUILTIN      BUILTIN           RE-S-2X00x8
CB 0             REV 01   750-067373   ABDJ0047          Control Board
CB 1             REV 03   750-067373   ABDH3016          Control Board
SFB 0            REV 08   750-067371   ABDK7180          Switch Fabric Board
SFB 1            REV 08   750-067371   ABDK7024          Switch Fabric Board
SFB 2            REV 08   750-067371   ABDK7188          Switch Fabric Board
SFB 3            REV 08   750-067371   ABDK7143          Switch Fabric Board
```

```
SFB 4            REV 08   750-067371   ABDK7030          Switch Fabric Board
SFB 5            REV 08   750-067371   ABDK7146          Switch Fabric Board
SFB 6            REV 08   750-067371   ABDK7203          Switch Fabric Board
SFB 7            REV 08   750-067371   ABDK7238          Switch Fabric Board
FPC 0            REV 36   750-044130   ABCS8607          MPC6E 3D
  CPU            REV 09   711-045719   ABCS8776          RMPC PMB
  MIC 0          REV 21   750-050008   ABCT5920          4X100GE CXP
    PIC 0                 BUILTIN      BUILTIN           4X100GE CXP
  XLM 0          REV 07.2.00 711-046638 ABCK3488         MPC6E XL
  XLM 1          REV 07.2.00 711-046638 ABCK5482         MPC6E XL
FPC 1            REV 22   750-063414   CAFJ3026          MPC9E 3D
  CPU            REV 16   750-057177   CAFF9332          SMPC PMB
FPC 7            REV 08   750-038492   ZX4080            MPCE Type 2 3D EQ
  CPU            REV 03   711-038484   ZX3665            MPCE PMB 2G
  MIC 0          REV 05   750-037128   ZR4031            1xCOC12/4xCOC3 CH-CE
    PIC 0                 BUILTIN      BUILTIN           1xCOC12/4xCOC3 CH-CE
  MIC 1          REV 23   750-032479   CADE8614          MIC-3D-8DS3-E3
    PIC 2                 BUILTIN      BUILTIN           MIC-3D-8DS3-E3
  QXM 0          REV 06   711-028408   ZW8299            MPC QXM
  QXM 1          REV 06   711-028408   ZY0609            MPC QXM
ADC 7            REV 17   750-043596   ABCA0990          Adapter Card
Fan Tray 0       REV 01   760-052467   ACAY6190          172mm FanTray - 6 Fans
Fan Tray 1       REV 01   760-052467   ACAY6414          172mm FanTray - 6 Fans
```

show chassis hardware detail (MX2008 Router)

```
user@host>show chassis hardware detail
Hardware inventory:
Item             Version  Part number  Serial number     Description
Chassis                                JN1259E1CAFL      MX2008
Midplane         REV 47   750-044636   ABAD1739          Lower Backplane
PMP              REV 01   711-051406   ACVD0738          Power Midplane
FPM Board        REV 02   760-068193   ABDG7408          Front Panel Display
PSM 1            REV 06   740-050037   1EDB61200R8       DC 52V Power Supply
Module
PSM 2            REV 06   740-050037   1EDB61200WA       DC 52V Power Supply
Module
PSM 3            REV 06   740-050037   1EDB61200NY       DC 52V Power Supply
Module
PSM 4            REV 06   740-050037   1EDB61200N2       DC 52V Power Supply
Module
PSM 5            REV 06   740-050037   1EDB61200RN       DC 52V Power Supply
Module
PSM 6            REV 06   740-050037   1EDB61200RF       DC 52V Power Supply
Module
PSM 7            REV 06   740-050037   1EDB61200R7       DC 52V Power Supply
Module
PDM 0            REV 01   740-060189   1EFF5250143       DC PDM Optimized
PDM 1            REV 01   740-060189   1EFF5250074       DC PDM Optimized
Routing Engine 0          BUILTIN      BUILTIN           RE-S-2X00x8
  vtbd0 15361 MB                                         Virtio Block Disk
  vtbd1 15360 MB                                         Virtio Block Disk
  ada0    511 MB  QEMU HARDDISK        QM00002           Emulated IDE Disk
  usb0 (addr 1)  XHCI root HUB 0       0x8086            uhub0
Routing Engine 1          BUILTIN      BUILTIN           RE-S-2X00x8
  vtbd0 15361 MB                                         Virtio Block Disk
  vtbd1 15360 MB                                         Virtio Block Disk
  ada0    511 MB  QEMU HARDDISK        QM00002           Emulated IDE Disk
  usb0 (addr 1)  XHCI root HUB 0       0x8086            uhub0
CB 0             REV 01   750-067373   ABDJ0047          Control Board
CB 1             REV 03   750-067373   ABDH3016          Control Board
```

```
SFB 0            REV 08   750-067371   ABDK7180          Switch Fabric Board
SFB 1            REV 08   750-067371   ABDK7024          Switch Fabric Board
SFB 2            REV 08   750-067371   ABDK7188          Switch Fabric Board
SFB 3            REV 08   750-067371   ABDK7143          Switch Fabric Board
SFB 4            REV 08   750-067371   ABDK7030          Switch Fabric Board
SFB 5            REV 08   750-067371   ABDK7146          Switch Fabric Board
SFB 6            REV 08   750-067371   ABDK7203          Switch Fabric Board
SFB 7            REV 08   750-067371   ABDK7238          Switch Fabric Board
FPC 0            REV 36   750-044130   ABCS8607          MPC6E 3D
  CPU            REV 09   711-045719   ABCS8776          RMPC PMB
  MIC 0          REV 21   750-050008   ABCT5920          4X100GE CXP
    PIC 0                 BUILTIN      BUILTIN           4X100GE CXP
  XLM 0          REV 07.2.00 711-046638 ABCK3488         MPC6E XL
  XLM 1          REV 07.2.00 711-046638 ABCK5482         MPC6E XL
FPC 1            REV 22   750-063414   CAFJ3026          MPC9E 3D
  CPU            REV 16   750-057177   CAFF9332          SMPC PMB
FPC 7            REV 08   750-038492   ZX4080            MPCE Type 2 3D EQ
  CPU            REV 03   711-038484   ZX3665            MPCE PMB 2G
  MIC 0          REV 05   750-037128   ZR4031            1xCOC12/4xCOC3 CH-CE
    PIC 0                 BUILTIN      BUILTIN           1xCOC12/4xCOC3 CH-CE
  MIC 1          REV 23   750-032479   CADE8614          MIC-3D-8DS3-E3
    PIC 2                 BUILTIN      BUILTIN           MIC-3D-8DS3-E3
  QXM 0          REV 06   711-028408   ZW8299            MPC QXM
  QXM 1          REV 06   711-028408   ZY0609            MPC QXM
ADC 7            REV 17   750-043596   ABCA0990          Adapter Card
Fan Tray 0       REV 01   760-052467   ACAY6190          172mm FanTray - 6 Fans
Fan Tray 1       REV 01   760-052467   ACAY6414          172mm FanTray - 6 Fans
```

show chassis hardware extensive (MX2008 Router)

```
user@host>show chassis hardware extensive
Hardware inventory:
Item             Version  Part number  Serial number     Description
Chassis                                JN1259E1CAFL      MX2008
 Jedec Code:   0x7fb0            EEPROM Version:    0x02
                                 S/N:               JN1259E1CAFL
 Assembly ID:  0x0557            Assembly Version:  00.00
 Date:         00-00-0000        Assembly Flags:    0x00
 ID: MX2008
 Board Information Record:
  Address 0x00: 00 00 00 00 00 00 00 00 00 00 00 00 00 00 00 00
 I2C Hex Data:
  Address 0x00: 7f b0 02 ff 05 57 00 00 00 00 00 00 00 00 00 00
  Address 0x10: 00 00 00 00 00 00 00 00 00 00 00 00 00 00 00 00
  Address 0x20: 4a 4e 31 32 35 39 45 31 43 41 46 4c 00 00 00 00
  Address 0x30: 00 00 00 ff 00 00 00 00 00 00 00 00 00 00 00 00
  Address 0x40: 00 00 00 00 00 00 00 00 00 00 00 00 00 00 00 00
  Address 0x50: 00 00 00 00 00 00 00 00 00 00 00 00 00 00 00 00
  Address 0x60: 00 00 00 00 00 00 00 00 00 00 00 00 00 00 00 00
  Address 0x70: 00 00 00 00 00 00 00 00 00 00 00 00 00 00 00 00
Midplane         REV 47   750-044636   ABAD1739          Lower Backplane
 Jedec Code:   0x7fb0            EEPROM Version:    0x02
 P/N:          750-044636        S/N:               ABAD1739
 Assembly ID:  0x0b66            Assembly Version:  01.47
 Date:         06-08-2016        Assembly Flags:    0x00
 Version:      REV 47            CLEI Code:         IPMU810ARB
 ID: Lower Backplane             FRU Model Number:  CHAS-BP-MX2010-S
 Board Information Record:
  Address 0x00: ad 01 08 00 f4 cc 55 3e 35 00 ff ff ff ff ff ff
 I2C Hex Data:
  Address 0x00: 7f b0 02 ff 0b 66 01 2f 52 45 56 20 34 37 00 00
```

```
  Address 0x10: 00 00 00 00 37 35 30 2d 30 34 34 36 33 36 00 00
  Address 0x20: 53 2f 4e 20 41 42 41 44 31 37 33 39 00 08 06 07
  Address 0x30: e0 ff ff ff ad 01 08 00 f4 cc 55 3e 35 00 ff ff
  Address 0x40: ff ff ff ff 01 49 50 4d 55 38 31 30 41 52 42 43
  Address 0x50: 48 41 53 2d 42 50 2d 4d 58 32 30 31 30 2d 53 00
  Address 0x60: 00 00 00 00 00 00 42 43 00 ff ff ff ff ff ff ff
  Address 0x70: ff ff ff 18 ff ff ff ff ff ff ff ff ff ff ff ff
PMP              REV 01   711-051406   ACVD0738          Power Midplane
 Jedec Code:   0x7fb0            EEPROM Version:    0x01
 P/N:          711-051406        S/N:               ACVD0738
 Assembly ID:  0x045d            Assembly Version:  01.01
 Date:         06-06-2016        Assembly Flags:    0x00
 Version:      REV 01
 ID: Power Midplane
 Board Information Record:
  Address 0x00: ff ff ff ff ff ff ff ff ff ff ff ff ff ff ff ff
 I2C Hex Data:
  Address 0x00: 7f b0 01 ff 04 5d 01 01 52 45 56 20 30 31 00 00
  Address 0x10: 00 00 00 00 37 31 31 2d 30 35 31 34 30 36 00 00
  Address 0x20: 53 2f 4e 20 41 43 56 44 30 37 33 38 00 06 06 07
  Address 0x30: e0 ff ff ff ff ff ff ff ff ff ff ff ff ff ff ff
  Address 0x40: ff ff ff ff 01 00 00 00 00 00 00 00 00 00 00 00
  Address 0x50: 00 00 00 00 00 00 00 00 00 00 00 00 00 00 00 00
  Address 0x60: 00 00 00 00 00 00 ff ff ff ff ff ff ff ff ff ff
  Address 0x70: ff ff ff ff ff ff ff ff ff ff ff ff ff ff ff ff
FPM Board        REV 02   760-068193   ABDG7408          Front Panel Display
 Jedec Code:   0x7fb0            EEPROM Version:    0x02
 P/N:          760-068193        S/N:               ABDG7408
 Assembly ID:  0x0cac            Assembly Version:  01.02
 Date:         06-06-2016        Assembly Flags:    0x00
 Version:      REV 02            CLEI Code:         PROTOXCLEI
 ID: Front Panel Display         FRU Model Number:  PROTO-ASSEMBLY
 Board Information Record:
  Address 0x00: ff ff ff ff ff ff ff ff ff ff ff ff ff ff ff ff
 I2C Hex Data:
  Address 0x00: 7f b0 02 fe 0c ac 01 02 52 45 56 20 30 32 00 00
  Address 0x10: 00 00 00 00 37 36 30 2d 30 36 38 31 39 33 00 00
  Address 0x20: 53 2f 4e 20 41 42 44 47 37 34 30 38 00 06 06 07
  Address 0x30: e0 ff ff ff ff ff ff ff ff ff ff ff ff ff ff ff
  Address 0x40: ff ff ff ff 01 50 52 4f 54 4f 58 43 4c 45 49 50
  Address 0x50: 52 4f 54 4f 2d 41 53 53 45 4d 42 4c 59 00 00 00
  Address 0x60: 00 00 00 00 00 00 41 30 30 ff ff ff ff ff ff ff
  Address 0x70: ff ff ff c2 ff ff ff ff ff ff ff ff ff ff ff ff
PSM 1            REV 06   740-050037   1EDB61200R8       DC 52V Power Supply
Module
 Jedec Code:   0x7fb0            EEPROM Version:    0x02
 P/N:          740-050037        S/N:               1EDB61200R8
 Assembly ID:  0x0478            Assembly Version:  01.06
 Date:         03-16-2016        Assembly Flags:    0x00
 Version:      REV 06            CLEI Code:         IPUPAPDKAA
 ID: DC 52V Power Supply Module  FRU Model Number:  MX2000-PSM-DC-S
 Board Information Record:
  Address 0x00: ff ff ff ff ff ff ff ff ff ff ff ff ff ff ff ff
 I2C Hex Data:
  Address 0x00: 7f b0 02 ff 04 78 01 06 52 45 56 20 30 36 00 00
  Address 0x10: 00 00 00 00 37 34 30 2d 30 35 30 30 33 37 00 00
  Address 0x20: 31 45 44 42 36 31 32 30 30 52 38 00 00 10 03 07
  Address 0x30: e0 72 75 ff ff ff ff ff ff ff ff ff ff ff ff ff
  Address 0x40: ff ff ff ff 01 49 50 55 50 41 50 44 4b 41 41 4d
  Address 0x50: 58 32 30 30 30 2d 50 53 4d 2d 44 43 2d 53 00 00
  Address 0x60: 00 00 00 00 00 00 31 30 36 ff ff ff ff ff ff ff
```

```
  Address 0x70: ff ff ff 26 00 00 00 00 00 00 00 00 00 00 00 00
PSM 2            REV 06   740-050037   1EDB61200WA       DC 52V Power Supply
Module
 Jedec Code:   0x7fb0            EEPROM Version:    0x02
 P/N:          740-050037        S/N:               1EDB61200WA
 Assembly ID:  0x0478            Assembly Version:  01.06
 Date:         03-16-2016        Assembly Flags:    0x00
 Version:      REV 06            CLEI Code:         IPUPAPDKAA
 ID: DC 52V Power Supply Module  FRU Model Number:  MX2000-PSM-DC-S
 Board Information Record:
  Address 0x00: ff ff ff ff ff ff ff ff ff ff ff ff ff ff ff ff
 I2C Hex Data:
  Address 0x00: 7f b0 02 ff 04 78 01 06 52 45 56 20 30 36 00 00
  Address 0x10: 00 00 00 00 37 34 30 2d 30 35 30 30 33 37 00 00
  Address 0x20: 31 45 44 42 36 31 32 30 30 57 41 00 00 10 03 07
  Address 0x30: e0 72 75 ff ff ff ff ff ff ff ff ff ff ff ff ff
  Address 0x40: ff ff ff ff 01 49 50 55 50 41 50 44 4b 41 41 4d
  Address 0x50: 58 32 30 30 30 2d 50 53 4d 2d 44 43 2d 53 00 00
  Address 0x60: 00 00 00 00 00 00 31 30 36 ff ff ff ff ff ff ff
  Address 0x70: ff ff ff 26 00 00 00 00 00 00 00 00 00 00 00 00
PSM 3            REV 06   740-050037   1EDB61200NY       DC 52V Power Supply
Module
 Jedec Code:   0x7fb0            EEPROM Version:    0x02
 P/N:          740-050037        S/N:               1EDB61200NY
 Assembly ID:  0x0478            Assembly Version:  01.06
 Date:         03-16-2016        Assembly Flags:    0x00
 Version:      REV 06            CLEI Code:         IPUPAPDKAA
 ID: DC 52V Power Supply Module  FRU Model Number:  MX2000-PSM-DC-S
 Board Information Record:
  Address 0x00: ff ff ff ff ff ff ff ff ff ff ff ff ff ff ff ff
 I2C Hex Data:
  Address 0x00: 7f b0 02 ff 04 78 01 06 52 45 56 20 30 36 00 00
  Address 0x10: 00 00 00 00 37 34 30 2d 30 35 30 30 33 37 00 00
  Address 0x20: 31 45 44 42 36 31 32 30 30 4e 59 00 00 10 03 07
  Address 0x30: e0 72 75 ff ff ff ff ff ff ff ff ff ff ff ff ff
  Address 0x40: ff ff ff ff 01 49 50 55 50 41 50 44 4b 41 41 4d
  Address 0x50: 58 32 30 30 30 2d 50 53 4d 2d 44 43 2d 53 00 00
  Address 0x60: 00 00 00 00 00 00 31 30 36 ff ff ff ff ff ff ff
  Address 0x70: ff ff ff 26 00 00 00 00 00 00 00 00 00 00 00 00
PSM 4            REV 06   740-050037   1EDB61200N2       DC 52V Power Supply
Module
 Jedec Code:   0x7fb0            EEPROM Version:    0x02
 P/N:          740-050037        S/N:               1EDB61200N2
 Assembly ID:  0x0478            Assembly Version:  01.06
 Date:         03-16-2016        Assembly Flags:    0x00
 Version:      REV 06            CLEI Code:         IPUPAPDKAA
 ID: DC 52V Power Supply Module  FRU Model Number:  MX2000-PSM-DC-S
 Board Information Record:
  Address 0x00: ff ff ff ff ff ff ff ff ff ff ff ff ff ff ff ff
 I2C Hex Data:
  Address 0x00: 7f b0 02 ff 04 78 01 06 52 45 56 20 30 36 00 00
  Address 0x10: 00 00 00 00 37 34 30 2d 30 35 30 30 33 37 00 00
  Address 0x20: 31 45 44 42 36 31 32 30 30 4e 32 00 00 10 03 07
  Address 0x30: e0 72 75 ff ff ff ff ff ff ff ff ff ff ff ff ff
  Address 0x40: ff ff ff ff 01 49 50 55 50 41 50 44 4b 41 41 4d
  Address 0x50: 58 32 30 30 30 2d 50 53 4d 2d 44 43 2d 53 00 00
  Address 0x60: 00 00 00 00 00 00 31 30 36 ff ff ff ff ff ff ff
  Address 0x70: ff ff ff 26 00 00 00 00 00 00 00 00 00 00 00 00
PSM 5            REV 06   740-050037   1EDB61200RN       DC 52V Power Supply
Module
 Jedec Code:   0x7fb0            EEPROM Version:    0x02
```

```
 P/N:          740-050037        S/N:               1EDB61200RN
 Assembly ID:  0x0478            Assembly Version:  01.06
 Date:         03-16-2016        Assembly Flags:    0x00
 Version:      REV 06            CLEI Code:         IPUPAPDKAA
 ID: DC 52V Power Supply Module  FRU Model Number:  MX2000-PSM-DC-S
 Board Information Record:
  Address 0x00: ff ff ff ff ff ff ff ff ff ff ff ff ff ff ff ff
 I2C Hex Data:
  Address 0x00: 7f b0 02 ff 04 78 01 06 52 45 56 20 30 36 00 00
  Address 0x10: 00 00 00 00 37 34 30 2d 30 35 30 30 33 37 00 00
  Address 0x20: 31 45 44 42 36 31 32 30 30 52 4e 00 00 10 03 07
  Address 0x30: e0 72 75 ff ff ff ff ff ff ff ff ff ff ff ff ff
  Address 0x40: ff ff ff ff 01 49 50 55 50 41 50 44 4b 41 41 4d
  Address 0x50: 58 32 30 30 30 2d 50 53 4d 2d 44 43 2d 53 00 00
  Address 0x60: 00 00 00 00 00 00 31 30 36 ff ff ff ff ff ff ff
  Address 0x70: ff ff ff 26 00 00 00 00 00 00 00 00 00 00 00 00
PSM 6            REV 06   740-050037   1EDB61200RF       DC 52V Power Supply
Module
 Jedec Code:   0x7fb0            EEPROM Version:    0x02
 P/N:          740-050037        S/N:               1EDB61200RF
 Assembly ID:  0x0478            Assembly Version:  01.06
 Date:         03-16-2016        Assembly Flags:    0x00
 Version:      REV 06            CLEI Code:         IPUPAPDKAA
 ID: DC 52V Power Supply Module  FRU Model Number:  MX2000-PSM-DC-S
 Board Information Record:
  Address 0x00: ff ff ff ff ff ff ff ff ff ff ff ff ff ff ff ff
 I2C Hex Data:
  Address 0x00: 7f b0 02 ff 04 78 01 06 52 45 56 20 30 36 00 00
  Address 0x10: 00 00 00 00 37 34 30 2d 30 35 30 30 33 37 00 00
  Address 0x20: 31 45 44 42 36 31 32 30 30 52 46 00 00 10 03 07
  Address 0x30: e0 72 75 ff ff ff ff ff ff ff ff ff ff ff ff ff
  Address 0x40: ff ff ff ff 01 49 50 55 50 41 50 44 4b 41 41 4d
  Address 0x50: 58 32 30 30 30 2d 50 53 4d 2d 44 43 2d 53 00 00
  Address 0x60: 00 00 00 00 00 00 31 30 36 ff ff ff ff ff ff ff
  Address 0x70: ff ff ff 26 00 00 00 00 00 00 00 00 00 00 00 00
PSM 7            REV 06   740-050037   1EDB61200R7       DC 52V Power Supply
Module
 Jedec Code:   0x7fb0            EEPROM Version:    0x02
 P/N:          740-050037        S/N:               1EDB61200R7
 Assembly ID:  0x0478            Assembly Version:  01.06
 Date:         03-16-2016        Assembly Flags:    0x00
 Version:      REV 06            CLEI Code:         IPUPAPDKAA
 ID: DC 52V Power Supply Module  FRU Model Number:  MX2000-PSM-DC-S
 Board Information Record:
  Address 0x00: ff ff ff ff ff ff ff ff ff ff ff ff ff ff ff ff
 I2C Hex Data:
  Address 0x00: 7f b0 02 ff 04 78 01 06 52 45 56 20 30 36 00 00
  Address 0x10: 00 00 00 00 37 34 30 2d 30 35 30 30 33 37 00 00
  Address 0x20: 31 45 44 42 36 31 32 30 30 52 37 00 00 10 03 07
  Address 0x30: e0 72 75 ff ff ff ff ff ff ff ff ff ff ff ff ff
  Address 0x40: ff ff ff ff 01 49 50 55 50 41 50 44 4b 41 41 4d
  Address 0x50: 58 32 30 30 30 2d 50 53 4d 2d 44 43 2d 53 00 00
  Address 0x60: 00 00 00 00 00 00 31 30 36 ff ff ff ff ff ff ff
  Address 0x70: ff ff ff 26 00 00 00 00 00 00 00 00 00 00 00 00
PDM 0            REV 01   740-060189   1EFF5250143       DC PDM Optimized
 Jedec Code:   0x7fb0            EEPROM Version:    0x02
 P/N:          740-060189        S/N:               1EFF5250143
 Assembly ID:  0x0495            Assembly Version:  01.01
 Date:         07-21-2015        Assembly Flags:    0x00
 Version:      REV 01            CLEI Code:         IPUPAN1KAA
 ID: DC PDM Optimized            FRU Model Number:  MX2K-PDM-OP-DC-S
```

```
 Board Information Record:
  Address 0x00: ff ff ff ff ff ff ff ff ff ff ff ff ff ff ff ff
 I2C Hex Data:
  Address 0x00: 7f b0 02 ff 04 95 01 01 52 45 56 20 30 31 00 00
  Address 0x10: 00 00 00 00 37 34 30 2d 30 36 30 31 38 39 00 00
  Address 0x20: 31 45 46 46 35 32 35 30 31 34 33 00 00 15 07 07
  Address 0x30: df ff ff ff ff ff ff ff ff ff ff ff ff ff ff ff
  Address 0x40: ff ff ff ff 01 49 50 55 50 41 4e 31 4b 41 41 4d
  Address 0x50: 58 32 4b 2d 50 44 4d 2d 4f 50 2d 44 43 2d 53 00
  Address 0x60: 00 00 00 00 00 00 31 30 31 ff ff ff ff ff ff ff
  Address 0x70: ff ff ff 84 00 00 00 00 00 00 00 00 00 00 00 00
PDM 1            REV 01   740-060189   1EFF5250074       DC PDM Optimized
 Jedec Code:   0x7fb0            EEPROM Version:    0x02
 P/N:          740-060189        S/N:               1EFF5250074
 Assembly ID:  0x0495            Assembly Version:  01.01
 Date:         07-21-2015        Assembly Flags:    0x00
 Version:      REV 01            CLEI Code:         IPUPAN1KAA
 ID: DC PDM Optimized            FRU Model Number:  MX2K-PDM-OP-DC-S
 Board Information Record:
  Address 0x00: ff ff ff ff ff ff ff ff ff ff ff ff ff ff ff ff
 I2C Hex Data:
  Address 0x00: 7f b0 02 ff 04 95 01 01 52 45 56 20 30 31 00 00
  Address 0x10: 00 00 00 00 37 34 30 2d 30 36 30 31 38 39 00 00
  Address 0x20: 31 45 46 46 35 32 35 30 30 37 34 00 00 15 07 07
  Address 0x30: df ff ff ff ff ff ff ff ff ff ff ff ff ff ff ff
  Address 0x40: ff ff ff ff 01 49 50 55 50 41 4e 31 4b 41 41 4d
  Address 0x50: 58 32 4b 2d 50 44 4d 2d 4f 50 2d 44 43 2d 53 00
  Address 0x60: 00 00 00 00 00 00 31 30 31 ff ff ff ff ff ff ff
  Address 0x70: ff ff ff 84 00 00 00 00 00 00 00 00 00 00 00 00
Routing Engine 0          BUILTIN      BUILTIN           RE-S-2X00x8
 Jedec Code:   0x0000            EEPROM Version:    0x00
 P/N:          BUILTIN           S/N:               BUILTIN
 Assembly ID:  0x0c10            Assembly Version:  00.00
 Date:         00-00-0000        Assembly Flags:    0x00
 ID: RE-S-2X00x8
 Board Information Record:
  Address 0x00: 00 00 00 00 00 00 00 00 00 00 00 00 00 00 00 00
 I2C Hex Data:
  Address 0x00: 00 00 00 00 0c 10 00 00 00 00 00 00 00 00 00 00
  Address 0x10: 00 00 00 00 42 55 49 4c 54 49 4e 00 00 00 00 00
  Address 0x20: 42 55 49 4c 54 49 4e 00 00 00 00 00 00 00 00 00
  Address 0x30: 00 00 00 00 00 00 00 00 00 00 00 00 00 00 00 00
  Address 0x40: 00 00 00 00 00 00 00 00 00 00 00 00 00 00 00 00
  Address 0x50: 00 00 00 00 00 00 00 00 00 00 00 00 00 00 00 00
  Address 0x60: 00 00 00 00 00 00 00 00 00 00 00 00 00 00 00 00
  Address 0x70: 00 00 00 00 00 00 00 00 00 00 00 00 00 00 00 00
  vtbd0 15361 MB                                        Virtio Block Disk
  vtbd1 15360 MB                                        Virtio Block Disk
  ada0    511 MB  QEMU HARDDISK        QM00002          Emulated IDE Disk
  usb0 (addr 1)  XHCI root HUB 0       0x8086           uhub0
Routing Engine 1          BUILTIN      BUILTIN           RE-S-2X00x8
 Jedec Code:   0x0000            EEPROM Version:    0x00
 P/N:          BUILTIN           S/N:               BUILTIN
 Assembly ID:  0x0c10            Assembly Version:  00.00
 Date:         00-00-0000        Assembly Flags:    0x00
 ID: RE-S-2X00x8
 Board Information Record:
  Address 0x00: 00 00 00 00 00 00 00 00 00 00 00 00 00 00 00 00
 I2C Hex Data:
  Address 0x00: 00 00 00 00 0c 10 00 00 00 00 00 00 00 00 00 00
  Address 0x10: 00 00 00 00 42 55 49 4c 54 49 4e 00 00 00 00 00
```

```
  Address 0x20: 42 55 49 4c 54 49 4e 00 00 00 00 00 00 00 00 00
  Address 0x30: 00 00 00 00 00 00 00 00 00 00 00 00 00 00 00 00
  Address 0x40: 00 00 00 00 00 00 00 00 00 00 00 00 00 00 00 00
  Address 0x50: 00 00 00 00 00 00 00 00 00 00 00 00 00 00 00 00
  Address 0x60: 00 00 00 00 00 00 00 00 00 00 00 00 00 00 00 00
  Address 0x70: 00 00 00 00 00 00 00 00 00 00 00 00 00 00 00 00
  vtbd0 15361 MB                                        Virtio Block Disk
  vtbd1 15360 MB                                        Virtio Block Disk
  ada0    511 MB  QEMU HARDDISK        QM00002          Emulated IDE Disk
  usb0 (addr 1)  XHCI root HUB 0       0x8086           uhub0
CB 0             REV 01   750-067373   ABDJ0047         Control Board
 Jedec Code:   0x7fb0            EEPROM Version:    0x02
 P/N:          750-067373        S/N:               ABDJ0047
 Assembly ID:  0x0c96            Assembly Version:  01.01
 Date:         06-21-2016        Assembly Flags:    0x00
 Version:      REV 01            CLEI Code:         PROTOXCLEI
 ID: Control Board               FRU Model Number:  PROTO-ASSEMBLY
 Board Information Record:
  Address 0x00: ad 01 00 20 28 8a 1c 6d c4 7e ff ff ff ff ff ff
 I2C Hex Data:
  Address 0x00: 7f b0 02 fe 0c 96 01 01 52 45 56 20 30 31 00 00
  Address 0x10: 00 00 00 00 37 35 30 2d 30 36 37 33 37 33 00 00
  Address 0x20: 53 2f 4e 20 41 42 44 4a 30 30 34 37 00 15 06 07
  Address 0x30: e0 ff ff ff ad 01 00 20 28 8a 1c 6d c4 7e ff ff
  Address 0x40: ff ff ff ff 01 50 52 4f 54 4f 58 43 4c 45 49 50
  Address 0x50: 52 4f 54 4f 2d 41 53 53 45 4d 42 4c 59 00 00 00
  Address 0x60: 00 00 00 00 00 00 41 30 30 ff ff ff ff ff ff ff
  Address 0x70: ff ff ff c2 ff ff ff ff ff ff ff ff ff ff ff ff
CB 1             REV 03   750-067373   ABDH3016         Control Board
 Jedec Code:   0x7fb0            EEPROM Version:    0x02
 P/N:          750-067373        S/N:               ABDH3016
 Assembly ID:  0x0c96            Assembly Version:  01.03
 Date:         05-07-2016        Assembly Flags:    0x00
 Version:      REV 03            CLEI Code:         PROTOXCLEI
 ID: Control Board               FRU Model Number:  PROTO-ASSEMBLY
 Board Information Record:
  Address 0x00: ad 01 00 20 f4 cc 55 35 71 a0 ff ff ff ff ff ff
 I2C Hex Data:
  Address 0x00: 7f b0 02 fe 0c 96 01 03 52 45 56 20 30 33 00 00
  Address 0x10: 00 00 00 00 37 35 30 2d 30 36 37 33 37 33 00 00
  Address 0x20: 53 2f 4e 20 41 42 44 48 33 30 31 36 00 07 05 07
  Address 0x30: e0 ff ff ff ad 01 00 20 f4 cc 55 35 71 a0 ff ff
  Address 0x40: ff ff ff ff 01 50 52 4f 54 4f 58 43 4c 45 49 50
  Address 0x50: 52 4f 54 4f 2d 41 53 53 45 4d 42 4c 59 00 00 00
  Address 0x60: 00 00 00 00 00 00 41 30 30 ff ff ff ff ff ff ff
  Address 0x70: ff ff ff c2 ff ff ff ff ff ff ff ff ff ff ff ff
SFB 0            REV 08   750-067371   ABDK7180         Switch Fabric Board
 Jedec Code:   0x7fb0            EEPROM Version:    0x02
 P/N:          750-067371        S/N:               ABDK7180
 Assembly ID:  0x0c97            Assembly Version:  01.08
 Date:         09-27-2016        Assembly Flags:    0x00
 Version:      REV 08            CLEI Code:         PROTOXCLEI
 ID: Switch Fabric Board         FRU Model Number:  PROTO-ASSEMBLY
 Board Information Record:
  Address 0x00: ff ff ff ff ff ff ff ff ff ff ff ff ff ff ff ff
 I2C Hex Data:
  Address 0x00: 7f b0 02 fe 0c 97 01 08 52 45 56 20 30 38 00 00
  Address 0x10: 00 00 00 00 37 35 30 2d 30 36 37 33 37 31 00 00
  Address 0x20: 53 2f 4e 20 41 42 44 4b 37 31 38 30 00 1b 09 07
  Address 0x30: e0 ff ff ff ff ff ff ff ff ff ff ff ff ff ff ff
  Address 0x40: ff ff ff ff 01 50 52 4f 54 4f 58 43 4c 45 49 50
```

```
  Address 0x50: 52 4f 54 4f 2d 41 53 53 45 4d 42 4c 59 00 00 00
  Address 0x60: 00 00 00 00 00 00 41 30 30 ff ff ff ff ff ff ff
  Address 0x70: ff ff ff c2 07 00 00 00 00 00 00 00 00 00 48 00
SFB 1            REV 08   750-067371   ABDK7024          Switch Fabric Board
 Jedec Code:   0x7fb0            EEPROM Version:    0x02
 P/N:          750-067371        S/N:               ABDK7024
 Assembly ID:  0x0c97            Assembly Version:  01.08
 Date:         09-27-2016        Assembly Flags:    0x00
 Version:      REV 08            CLEI Code:         PROTOXCLEI
 ID: Switch Fabric Board         FRU Model Number:  PROTO-ASSEMBLY
 Board Information Record:
  Address 0x00: ff ff ff ff ff ff ff ff ff ff ff ff ff ff ff ff
 I2C Hex Data:
  Address 0x00: 7f b0 02 fe 0c 97 01 08 52 45 56 20 30 38 00 00
  Address 0x10: 00 00 00 00 37 35 30 2d 30 36 37 33 37 31 00 00
  Address 0x20: 53 2f 4e 20 41 42 44 4b 37 30 32 34 00 1b 09 07
  Address 0x30: e0 ff ff ff ff ff ff ff ff ff ff ff ff ff ff ff
  Address 0x40: ff ff ff ff 01 50 52 4f 54 4f 58 43 4c 45 49 50
  Address 0x50: 52 4f 54 4f 2d 41 53 53 45 4d 42 4c 59 00 00 00
  Address 0x60: 00 00 00 00 00 00 41 30 30 ff ff ff ff ff ff ff
  Address 0x70: ff ff ff c2 07 00 00 00 00 00 00 00 01 00 48 00
SFB 2            REV 08   750-067371   ABDK7188          Switch Fabric Board
 Jedec Code:   0x7fb0            EEPROM Version:    0x02
 P/N:          750-067371        S/N:               ABDK7188
 Assembly ID:  0x0c97            Assembly Version:  01.08
 Date:         09-28-2016        Assembly Flags:    0x00
 Version:      REV 08            CLEI Code:         PROTOXCLEI
 ID: Switch Fabric Board         FRU Model Number:  PROTO-ASSEMBLY
 Board Information Record:
  Address 0x00: ff ff ff ff ff ff ff ff ff ff ff ff ff ff ff ff
 I2C Hex Data:
  Address 0x00: 7f b0 02 fe 0c 97 01 08 52 45 56 20 30 38 00 00
  Address 0x10: 00 00 00 00 37 35 30 2d 30 36 37 33 37 31 00 00
  Address 0x20: 53 2f 4e 20 41 42 44 4b 37 31 38 38 00 1c 09 07
  Address 0x30: e0 ff ff ff ff ff ff ff ff ff ff ff ff ff ff ff
  Address 0x40: ff ff ff ff 01 50 52 4f 54 4f 58 43 4c 45 49 50
  Address 0x50: 52 4f 54 4f 2d 41 53 53 45 4d 42 4c 59 00 00 00
  Address 0x60: 00 00 00 00 00 00 41 30 30 ff ff ff ff ff ff ff
  Address 0x70: ff ff ff c2 07 00 00 00 00 00 00 00 02 00 48 00
SFB 3            REV 08   750-067371   ABDK7143          Switch Fabric Board
 Jedec Code:   0x7fb0            EEPROM Version:    0x02
 P/N:          750-067371        S/N:               ABDK7143
 Assembly ID:  0x0c97            Assembly Version:  01.08
 Date:         09-27-2016        Assembly Flags:    0x00
 Version:      REV 08            CLEI Code:         PROTOXCLEI
 ID: Switch Fabric Board         FRU Model Number:  PROTO-ASSEMBLY
 Board Information Record:
  Address 0x00: ff ff ff ff ff ff ff ff ff ff ff ff ff ff ff ff
 I2C Hex Data:
  Address 0x00: 7f b0 02 fe 0c 97 01 08 52 45 56 20 30 38 00 00
  Address 0x10: 00 00 00 00 37 35 30 2d 30 36 37 33 37 31 00 00
  Address 0x20: 53 2f 4e 20 41 42 44 4b 37 31 34 33 00 1b 09 07
  Address 0x30: e0 ff ff ff ff ff ff ff ff ff ff ff ff ff ff ff
  Address 0x40: ff ff ff ff 01 50 52 4f 54 4f 58 43 4c 45 49 50
  Address 0x50: 52 4f 54 4f 2d 41 53 53 45 4d 42 4c 59 00 00 00
  Address 0x60: 00 00 00 00 00 00 41 30 30 ff ff ff ff ff ff ff
  Address 0x70: ff ff ff c2 07 00 00 00 00 00 00 00 03 00 48 00
SFB 4            REV 08   750-067371   ABDK7030          Switch Fabric Board
 Jedec Code:   0x7fb0            EEPROM Version:    0x02
 P/N:          750-067371        S/N:               ABDK7030
 Assembly ID:  0x0c97            Assembly Version:  01.08
```

```
  Date:         09-24-2016        Assembly Flags:    0x00
  Version:      REV 08            CLEI Code:         PROTOXCLEI
  ID: Switch Fabric Board         FRU Model Number:  PROTO-ASSEMBLY
  Board Information Record:
   Address 0x00: ff ff ff ff ff ff ff ff ff ff ff ff ff ff ff ff
  I2C Hex Data:
   Address 0x00: 7f b0 02 fe 0c 97 01 08 52 45 56 20 30 38 00 00
   Address 0x10: 00 00 00 00 37 35 30 2d 30 36 37 33 37 31 00 00
   Address 0x20: 53 2f 4e 20 41 42 44 4b 37 30 33 30 00 18 09 07
   Address 0x30: e0 ff ff ff ff ff ff ff ff ff ff ff ff ff ff ff
   Address 0x40: ff ff ff ff 01 50 52 4f 54 4f 58 43 4c 45 49 50
   Address 0x50: 52 4f 54 4f 2d 41 53 53 45 4d 42 4c 59 00 00 00
   Address 0x60: 00 00 00 00 00 00 41 30 30 ff ff ff ff ff ff ff
   Address 0x70: ff ff ff c2 07 00 00 00 00 00 00 00 04 00 48 00
 SFB 5            REV 08   750-067371   ABDK7146          Switch Fabric Board
  Jedec Code:   0x7fb0            EEPROM Version:    0x02
  P/N:          750-067371        S/N:               ABDK7146
  Assembly ID:  0x0c97            Assembly Version:  01.08
  Date:         09-27-2016        Assembly Flags:    0x00
  Version:      REV 08            CLEI Code:         PROTOXCLEI
  ID: Switch Fabric Board         FRU Model Number:  PROTO-ASSEMBLY
  Board Information Record:
   Address 0x00: ff ff ff ff ff ff ff ff ff ff ff ff ff ff ff ff
  I2C Hex Data:
   Address 0x00: 7f b0 02 fe 0c 97 01 08 52 45 56 20 30 38 00 00
   Address 0x10: 00 00 00 00 37 35 30 2d 30 36 37 33 37 31 00 00
   Address 0x20: 53 2f 4e 20 41 42 44 4b 37 31 34 36 00 1b 09 07
   Address 0x30: e0 ff ff ff ff ff ff ff ff ff ff ff ff ff ff ff
   Address 0x40: ff ff ff ff 01 50 52 4f 54 4f 58 43 4c 45 49 50
   Address 0x50: 52 4f 54 4f 2d 41 53 53 45 4d 42 4c 59 00 00 00
   Address 0x60: 00 00 00 00 00 00 41 30 30 ff ff ff ff ff ff ff
   Address 0x70: ff ff ff c2 07 00 00 00 00 00 00 00 05 00 48 00
 SFB 6            REV 08   750-067371   ABDK7203          Switch Fabric Board
  Jedec Code:   0x7fb0            EEPROM Version:    0x02
  P/N:          750-067371        S/N:               ABDK7203
  Assembly ID:  0x0c97            Assembly Version:  01.08
  Date:         09-28-2016        Assembly Flags:    0x00
  Version:      REV 08            CLEI Code:         PROTOXCLEI
  ID: Switch Fabric Board         FRU Model Number:  PROTO-ASSEMBLY
  Board Information Record:
   Address 0x00: ff ff ff ff ff ff ff ff ff ff ff ff ff ff ff ff
  I2C Hex Data:
   Address 0x00: 7f b0 02 fe 0c 97 01 08 52 45 56 20 30 38 00 00
   Address 0x10: 00 00 00 00 37 35 30 2d 30 36 37 33 37 31 00 00
   Address 0x20: 53 2f 4e 20 41 42 44 4b 37 32 30 33 00 1c 09 07
   Address 0x30: e0 ff ff ff ff ff ff ff ff ff ff ff ff ff ff ff
   Address 0x40: ff ff ff ff 01 50 52 4f 54 4f 58 43 4c 45 49 50
   Address 0x50: 52 4f 54 4f 2d 41 53 53 45 4d 42 4c 59 00 00 00
   Address 0x60: 00 00 00 00 00 00 41 30 30 ff ff ff ff ff ff ff
   Address 0x70: ff ff ff c2 07 00 00 00 00 00 00 00 06 00 48 00
 SFB 7            REV 08   750-067371   ABDK7238          Switch Fabric Board
  Jedec Code:   0x7fb0            EEPROM Version:    0x02
  P/N:          750-067371        S/N:               ABDK7238
  Assembly ID:  0x0c97            Assembly Version:  01.08
  Date:         09-27-2016        Assembly Flags:    0x00
  Version:      REV 08            CLEI Code:         PROTOXCLEI
  ID: Switch Fabric Board         FRU Model Number:  PROTO-ASSEMBLY
  Board Information Record:
   Address 0x00: ff ff ff ff ff ff ff ff ff ff ff ff ff ff ff ff
  I2C Hex Data:
   Address 0x00: 7f b0 02 fe 0c 97 01 08 52 45 56 20 30 38 00 00
```

```
  Address 0x10: 00 00 00 00 37 35 30 2d 30 36 37 33 37 31 00 00
  Address 0x20: 53 2f 4e 20 41 42 44 4b 37 32 33 38 00 1b 09 07
  Address 0x30: e0 ff ff ff ff ff ff ff ff ff ff ff ff ff ff ff
  Address 0x40: ff ff ff ff 01 50 52 4f 54 4f 58 43 4c 45 49 50
  Address 0x50: 52 4f 54 4f 2d 41 53 53 45 4d 42 4c 59 00 00 00
  Address 0x60: 00 00 00 00 00 00 41 30 30 ff ff ff ff ff ff ff
  Address 0x70: ff ff ff c2 07 00 00 00 00 00 00 00 07 00 48 00
FPC 0            REV 36   750-044130   ABCS8607          MPC6E 3D
 Jedec Code:   0x7fb0            EEPROM Version:    0x02
 P/N:          750-044130        S/N:               ABCS8607
 Assembly ID:  0x0b86            Assembly Version:  01.36
 Date:         10-29-2013        Assembly Flags:    0x00
 Version:      REV 36            CLEI Code:         PROTOXCLEI
 ID: MPC6E 3D                    FRU Model Number:  PROTO-ASSEMBLY
 Board Information Record:
  Address 0x00: ff ff ff ff ff ff ff ff ff ff ff ff ff ff ff ff
 I2C Hex Data:
  Address 0x00: 7f b0 02 fe 0b 86 01 24 52 45 56 20 33 36 00 00
  Address 0x10: 00 00 00 00 37 35 30 2d 30 34 34 31 33 30 00 00
  Address 0x20: 53 2f 4e 20 41 42 43 53 38 36 30 37 00 1d 0a 07
  Address 0x30: dd ff ff ff ff ff ff ff ff ff ff ff ff ff ff ff
  Address 0x40: ff ff ff ff 01 50 52 4f 54 4f 58 43 4c 45 49 50
  Address 0x50: 52 4f 54 4f 2d 41 53 53 45 4d 42 4c 59 00 00 00
  Address 0x60: 00 00 00 00 00 00 41 30 30 ff ff ff ff ff ff ff
  Address 0x70: ff ff ff c2 ff ff ff ff ff ff ff ff ff ff ff ff
  CPU            REV 09   711-045719   ABCS8776          RMPC PMB
 Jedec Code:   0x7fb0            EEPROM Version:    0x02
 P/N:          711-045719        S/N:               ABCS8776
 Assembly ID:  0x0b85            Assembly Version:  01.09
 Date:         10-24-2013        Assembly Flags:    0x00
 Version:      REV 09
 ID: RMPC PMB
 Board Information Record:
  Address 0x00: ff ff ff ff ff ff ff ff ff ff ff ff ff ff ff ff
 I2C Hex Data:
  Address 0x00: 7f b0 02 ff 0b 85 01 09 52 45 56 20 30 39 00 00
  Address 0x10: 00 00 00 00 37 31 31 2d 30 34 35 37 31 39 00 00
  Address 0x20: 53 2f 4e 20 41 42 43 53 38 37 37 36 00 18 0a 07
  Address 0x30: dd ff ff ff ff ff ff ff ff ff ff ff ff ff ff ff
  Address 0x40: ff ff ff ff 00 50 52 4f 54 4f 58 43 4c 45 49 50
  Address 0x50: 52 4f 54 4f 2d 41 53 53 45 4d 42 4c 59 00 00 00
  Address 0x60: 00 00 00 00 00 00 41 30 30 ff ff ff ff ff ff ff
  Address 0x70: ff ff ff c2 00 00 00 00 16 47 1f b0 00 00 00 00
  MIC 0          REV 21   750-050008   ABCT5920          4X100GE CXP
 Jedec Code:   0x7fb0            EEPROM Version:    0x02
 P/N:          750-050008        S/N:               ABCT5920
 Assembly ID:  0x0a83            Assembly Version:  01.21
 Date:         09-29-2014        Assembly Flags:    0x00
 Version:      REV 21            CLEI Code:         IP9IATYDAA
 ID: 4X100GE CXP                 FRU Model Number:  MIC6-100G-CXP
 Board Information Record:
  Address 0x00: 12 01 07 02 03 ff ff ff ff ff ff ff ff ff ff ff
 I2C Hex Data:
  Address 0x00: 7f b0 02 ff 0a 83 01 15 52 45 56 20 32 31 00 00
  Address 0x10: 00 00 00 00 37 35 30 2d 30 35 30 30 30 38 00 00
  Address 0x20: 53 2f 4e 20 41 42 43 54 35 39 32 30 00 1d 09 07
  Address 0x30: de ff ff ff 12 01 07 02 03 ff ff ff ff ff ff ff
  Address 0x40: ff ff ff ff 01 49 50 39 49 41 54 59 44 41 41 4d
  Address 0x50: 49 43 36 2d 31 30 30 47 2d 43 58 50 00 00 00 00
  Address 0x60: 00 00 00 00 00 00 41 41 00 ff ff ff ff ff ff ff
  Address 0x70: ff ff ff 74 00 00 00 00 10 09 73 3c c0 02 70 3c
```

```
    PIC 0                 BUILTIN      BUILTIN           4X100GE CXP
  XLM 0          REV 07.2.00 711-046638 ABCK3488         MPC6E XL
  Jedec Code:   0x7fb0            EEPROM Version:    0x02
  P/N:          711-046638        S/N:               ABCK3488
  Assembly ID:  0x0b88            Assembly Version:  01.07
  Date:         11-11-2013        Assembly Flags:    0x00
  Version:      REV 07.2.00
  ID: MPC6E XL
  Board Information Record:
   Address 0x00: ff ff ff ff ff ff ff ff ff ff ff ff ff ff ff ff
  I2C Hex Data:
   Address 0x00: 7f b0 02 ff 0b 88 01 07 52 45 56 20 30 37 2e 32
   Address 0x10: 2e 30 30 00 37 31 31 2d 30 34 36 36 33 38 00 00
   Address 0x20: 53 2f 4e 20 41 42 43 4b 33 34 38 38 00 0b 0b 07
   Address 0x30: dd ff ff ff ff ff ff ff ff ff ff ff ff ff ff ff
   Address 0x40: ff ff ff ff 00 50 52 4f 54 4f 58 43 4c 45 49 50
   Address 0x50: 52 4f 54 4f 2d 41 53 53 45 4d 42 4c 59 00 00 00
   Address 0x60: 00 00 00 00 00 00 41 30 30 ff ff ff ff ff ff ff
   Address 0x70: ff ff ff c2 00 00 00 00 00 00 00 00 00 00 00 00
  XLM 1          REV 07.2.00 711-046638 ABCK5482         MPC6E XL
  Jedec Code:   0x7fb0            EEPROM Version:    0x02
  P/N:          711-046638        S/N:               ABCK5482
  Assembly ID:  0x0b88            Assembly Version:  01.07
  Date:         10-21-2013        Assembly Flags:    0x00
  Version:      REV 07.2.00
  ID: MPC6E XL
  Board Information Record:
   Address 0x00: ff ff ff ff ff ff ff ff ff ff ff ff ff ff ff ff
  I2C Hex Data:
   Address 0x00: 7f b0 02 ff 0b 88 01 07 52 45 56 20 30 37 2e 32
   Address 0x10: 2e 30 30 00 37 31 31 2d 30 34 36 36 33 38 00 00
   Address 0x20: 53 2f 4e 20 41 42 43 4b 35 34 38 32 00 15 0a 07
   Address 0x30: dd ff ff ff ff ff ff ff ff ff ff ff ff ff ff ff
   Address 0x40: ff ff ff ff 00 50 52 4f 54 4f 58 43 4c 45 49 50
   Address 0x50: 52 4f 54 4f 2d 41 53 53 45 4d 42 4c 59 00 00 00
   Address 0x60: 00 00 00 00 00 00 41 30 30 ff ff ff ff ff ff ff
   Address 0x70: ff ff ff c2 00 00 00 00 00 00 00 00 00 00 00 00
FPC 1            REV 22   750-063414   CAFJ3026          MPC9E 3D
  Jedec Code:   0x7fb0            EEPROM Version:    0x02
  P/N:          750-063414        S/N:               CAFJ3026
  Assembly ID:  0x0c43            Assembly Version:  01.22
  Date:         03-28-2016        Assembly Flags:    0x00
  Version:      REV 22            CLEI Code:         IPUCBMUCAA
  ID: MPC9E 3D                    FRU Model Number:  MX2K-MPC9E
  Board Information Record:
   Address 0x00: ff ff ff ff ff ff ff ff ff ff ff ff ff ff ff ff
  I2C Hex Data:
   Address 0x00: 7f b0 02 ff 0c 43 01 16 52 45 56 20 32 32 00 00
   Address 0x10: 00 00 00 00 37 35 30 2d 30 36 33 34 31 34 00 00
   Address 0x20: 53 2f 4e 20 43 41 46 4a 33 30 32 36 00 1c 03 07
   Address 0x30: e0 ff ff ff ff ff ff ff ff ff ff ff ff ff ff ff
   Address 0x40: ff ff ff ff 01 49 50 55 43 42 4d 55 43 41 41 4d
   Address 0x50: 58 32 4b 2d 4d 50 43 39 45 00 00 00 00 00 00 00
   Address 0x60: 00 00 00 00 00 00 41 41 00 ff ff ff ff ff ff ff
   Address 0x70: ff ff ff 00 ff ff ff ff ff ff ff ff ff ff ff ff
  CPU            REV 16   750-057177   CAFF9332          SMPC PMB
  Jedec Code:   0x7fb0            EEPROM Version:    0x01
  P/N:          750-057177        S/N:               CAFF9332
  Assembly ID:  0x0c22            Assembly Version:  01.16
  Date:         03-20-2016        Assembly Flags:    0x00
  Version:      REV 16
```

```
  ID: SMPC PMB
  Board Information Record:
   Address 0x00: ff ff ff ff ff ff ff ff ff ff ff ff ff ff ff ff
  I2C Hex Data:
   Address 0x00: 7f b0 01 ff 0c 22 01 10 52 45 56 20 31 36 00 00
   Address 0x10: 00 00 00 00 37 35 30 2d 30 35 37 31 37 37 00 00
   Address 0x20: 53 2f 4e 20 43 41 46 46 39 33 33 32 00 14 03 07
   Address 0x30: e0 ff ff ff ff ff ff ff ff ff ff ff ff ff ff ff
   Address 0x40: ff ff ff ff 00 ff ff ff ff ff ff ff ff ff ff ff
   Address 0x50: ff ff ff ff ff ff ff ff ff ff ff ff ff ff ff ff
   Address 0x60: ff ff ff ff ff ff ff ff ff ff ff ff ff ff ff ff
   Address 0x70: ff ff ff ff 00 00 00 00 38 f9 0d e0 4f d1 4b 08
FPC 7            REV 08   750-038492   ZX4080           MPCE Type 2 3D EQ
  Jedec Code:   0x7fb0            EEPROM Version:    0x02
  P/N:          750-038492        S/N:               ZX4080
  Assembly ID:  0x0b35            Assembly Version:  01.08
  Date:         02-03-2012        Assembly Flags:    0x00
  Version:      REV 08            CLEI Code:         COUIBA5BAA
  ID: MPCE Type 2 3D EQ           FRU Model Number:  MX-MPC2E-3D-EQ
  Board Information Record:
   Address 0x00: ff ff ff ff ff ff ff ff ff ff ff ff ff ff ff ff
  I2C Hex Data:
   Address 0x00: 7f b0 02 ff 0b 35 01 08 52 45 56 20 30 38 00 00
   Address 0x10: 00 00 00 00 37 35 30 2d 30 33 38 34 39 32 00 00
   Address 0x20: 53 2f 4e 20 5a 58 34 30 38 30 00 00 00 03 02 07
   Address 0x30: dc ff ff ff ff ff ff ff ff ff ff ff ff ff ff ff
   Address 0x40: ff ff ff ff 01 43 4f 55 49 42 41 35 42 41 41 4d
   Address 0x50: 58 2d 4d 50 43 32 45 2d 33 44 2d 45 51 00 00 00
   Address 0x60: 00 00 00 00 00 00 41 00 00 ff ff ff ff ff ff ff
   Address 0x70: ff ff ff 74 ff ff ff ff ff ff ff ff ff ff ff ff
   CPU            REV 03   711-038484   ZX3665           MPCE PMB 2G
  Jedec Code:   0x7fb0            EEPROM Version:    0x01
  P/N:          711-038484        S/N:               ZX3665
  Assembly ID:  0x0b36            Assembly Version:  01.03
  Date:         02-01-2012        Assembly Flags:    0x00
  Version:      REV 03
  ID: MPCE PMB 2G
  Board Information Record:
   Address 0x00: ff ff ff ff ff ff ff ff ff ff ff ff ff ff ff ff
  I2C Hex Data:
   Address 0x00: 7f b0 01 ff 0b 36 01 03 52 45 56 20 30 33 00 00
   Address 0x10: 00 00 00 00 37 31 31 2d 30 33 38 34 38 34 00 00
   Address 0x20: 53 2f 4e 20 5a 58 33 36 36 35 00 00 00 01 02 07
   Address 0x30: dc ff ff ff ff ff ff ff ff ff ff ff ff ff ff ff
   Address 0x40: ff ff ff ff 00 ff ff ff ff ff ff ff ff ff ff ff
   Address 0x50: ff ff ff ff ff ff ff ff ff ff ff ff ff ff ff ff
   Address 0x60: ff ff ff ff ff ff ff ff ff ff ff ff ff ff ff ff
   Address 0x70: ff ff ff ff 00 00 00 02 00 00 0c 00 42 5f c0 a4
   MIC 0          REV 05   750-037128   ZR4031           1xCOC12/4xCOC3 CH-CE
  Jedec Code:   0x7fb0            EEPROM Version:    0x02
  P/N:          750-037128        S/N:               ZR4031
  Assembly ID:  0x0a1b            Assembly Version:  01.05
  Date:         12-04-2011        Assembly Flags:    0x00
  Version:      REV 05            CLEI Code:         PROTOXCLEI
  ID: 1xCOC12/4xCOC3 CH-CE        FRU Model Number:  MIC-3D-4CHOC3-1OC12-CE
  Board Information Record:
   Address 0x00: 12 01 05 03 05 ff ff ff ff ff ff ff ff ff ff ff
  I2C Hex Data:
   Address 0x00: 7f b0 02 ff 0a 1b 01 05 52 45 56 20 30 35 00 00
   Address 0x10: 00 00 00 00 37 35 30 2d 30 33 37 31 32 38 00 00
   Address 0x20: 53 2f 4e 20 5a 52 34 30 33 31 00 00 00 04 0c 07
```

```
 Address 0x30: db ff ff ff 12 01 05 03 05 ff ff ff ff ff ff ff
 Address 0x40: ff ff ff ff 01 50 52 4f 54 4f 58 43 4c 45 49 4d
 Address 0x50: 49 43 2d 33 44 2d 34 43 48 4f 43 33 2d 31 4f 43
 Address 0x60: 31 32 2d 43 45 00 30 32 00 ff ff ff ff ff ff ff
 Address 0x70: ff ff ff 98 c0 02 61 bc 7f b0 02 ff 0a 11 01 17
   PIC 0                 BUILTIN      BUILTIN           1xCOC12/4xCOC3 CH-CE
 MIC 1          REV 23   750-032479   CADE8614          MIC-3D-8DS3-E3
Jedec Code:   0x7fb0            EEPROM Version:    0x02
P/N:          750-032479        S/N:               CADE8614
Assembly ID:  0x0a11            Assembly Version:  01.23
Date:         07-24-2014        Assembly Flags:    0x00
Version:      REV 23            CLEI Code:         COUIA8DBAA
ID: MIC-3D-8DS3-E3              FRU Model Number:  MIC-3D-8DS3-E3
Board Information Record:
 Address 0x00: 56 01 ff ff 03 ff ff ff ff ff ff ff ff ff ff ff
I2C Hex Data:
 Address 0x00: 7f b0 02 ff 0a 11 01 17 52 45 56 20 32 33 00 00
 Address 0x10: 00 00 00 00 37 35 30 2d 30 33 32 34 37 39 00 00
 Address 0x20: 53 2f 4e 20 43 41 44 45 38 36 31 34 00 18 07 07
 Address 0x30: de ff ff ff 56 01 ff ff 03 ff ff ff ff ff ff ff
 Address 0x40: ff ff ff ff 01 43 4f 55 49 41 38 44 42 41 41 4d
 Address 0x50: 49 43 2d 33 44 2d 38 44 53 33 2d 45 33 00 00 00
 Address 0x60: 00 00 00 00 00 00 41 41 00 ff ff ff ff ff ff ff
 Address 0x70: ff ff ff 7b c0 03 e5 7c 4f 8a 9e 10 00 00 00 02
   PIC 2                 BUILTIN      BUILTIN           MIC-3D-8DS3-E3
 QXM 0          REV 06   711-028408   ZW8299            MPC QXM
Jedec Code:   0x7fb0            EEPROM Version:    0x01
P/N:          711-028408        S/N:               ZW8299
Assembly ID:  0x097a            Assembly Version:  02.06
Date:         01-19-2012        Assembly Flags:    0x00
Version:      REV 06
ID: MPC QXM
Board Information Record:
 Address 0x00: ff ff ff ff ff ff ff ff ff ff ff ff ff ff ff ff
I2C Hex Data:
 Address 0x00: 7f b0 01 ff 09 7a 02 06 52 45 56 20 30 36 00 00
 Address 0x10: 00 00 00 00 37 31 31 2d 30 32 38 34 30 38 00 00
 Address 0x20: 53 2f 4e 20 5a 57 38 32 39 39 00 00 00 13 01 07
 Address 0x30: dc ff ff ff ff ff ff ff ff ff ff ff ff ff ff ff
 Address 0x40: ff ff ff ff 00 ff ff ff ff ff ff ff ff ff ff ff
 Address 0x50: ff ff ff ff ff ff ff ff ff ff ff ff ff ff ff ff
 Address 0x60: ff ff ff ff ff ff ff ff ff ff ff ff ff ff ff ff
 Address 0x70: ff ff ff ff 00 00 00 00 00 00 00 00 00 00 00 00
 QXM 1          REV 06   711-028408   ZY0609            MPC QXM
Jedec Code:   0x7fb0            EEPROM Version:    0x01
P/N:          711-028408        S/N:               ZY0609
Assembly ID:  0x097a            Assembly Version:  02.06
Date:         01-19-2012        Assembly Flags:    0x00
Version:      REV 06
ID: MPC QXM
Board Information Record:
 Address 0x00: ff ff ff ff ff ff ff ff ff ff ff ff ff ff ff ff
I2C Hex Data:
 Address 0x00: 7f b0 01 ff 09 7a 02 06 52 45 56 20 30 36 00 00
 Address 0x10: 00 00 00 00 37 31 31 2d 30 32 38 34 30 38 00 00
 Address 0x20: 53 2f 4e 20 5a 59 30 36 30 39 00 00 00 13 01 07
 Address 0x30: dc ff ff ff ff ff ff ff ff ff ff ff ff ff ff ff
 Address 0x40: ff ff ff ff 00 ff ff ff ff ff ff ff ff ff ff ff
 Address 0x50: ff ff ff ff ff ff ff ff ff ff ff ff ff ff ff ff
 Address 0x60: ff ff ff ff ff ff ff ff ff ff ff ff ff ff ff ff
 Address 0x70: ff ff ff ff 00 00 00 00 00 00 00 00 00 00 00 00
```

```
ADC 7            REV 17   750-043596   ABCA0990          Adapter Card
 Jedec Code:   0x7fb0            EEPROM Version:    0x02
 P/N:          750-043596        S/N:               ABCA0990
 Assembly ID:  0x0b3d            Assembly Version:  01.17
 Date:         03-07-2013        Assembly Flags:    0x00
 Version:      REV 17            CLEI Code:         IPUCBA8CAA
 ID: Adapter Card                FRU Model Number:  MX2000-LC-ADAPTER
 Board Information Record:
  Address 0x00: ff ff ff ff ff ff ff ff ff ff ff ff ff ff ff ff
 I2C Hex Data:
  Address 0x00: 7f b0 02 ff 0b 3d 01 11 52 45 56 20 31 37 00 00
  Address 0x10: 00 00 00 00 37 35 30 2d 30 34 33 35 39 36 00 00
  Address 0x20: 53 2f 4e 20 41 42 43 41 30 39 39 30 00 07 03 07
  Address 0x30: dd ff ff ff ff ff ff ff ff ff ff ff ff ff ff ff
  Address 0x40: ff ff ff ff 01 49 50 55 43 42 41 38 43 41 41 4d
  Address 0x50: 58 32 30 30 30 2d 4c 43 2d 41 44 41 50 54 45 52
  Address 0x60: 00 00 00 00 00 00 41 00 00 ff ff ff ff ff ff ff
  Address 0x70: ff ff ff 3a 00 00 00 00 00 00 00 00 00 00 00 00
Fan Tray 0       REV 01   760-052467   ACAY6190          172mm FanTray - 6 Fans
 Jedec Code:   0x7fb0            EEPROM Version:    0x02
 P/N:          760-052467        S/N:               ACAY6190
 Assembly ID:  0x0b96            Assembly Version:  02.10
 Date:         09-18-2015        Assembly Flags:    0x00
 Version:      REV 01            CLEI Code:         IPUCBENCAA
 ID: 172mm FanTray - 6 Fans      FRU Model Number:  MX2000-FANTRAY-S
 Board Information Record:
  Address 0x00: ff ff ff ff ff ff ff ff ff ff ff ff ff ff ff ff
 I2C Hex Data:
  Address 0x00: 7f b0 02 ff 0b 96 02 0a 52 45 56 20 30 31 00 00
  Address 0x10: 00 00 00 00 37 36 30 2d 30 35 32 34 36 37 00 00
  Address 0x20: 53 2f 4e 20 41 43 41 59 36 31 39 30 00 12 09 07
  Address 0x30: df ff ff ff ff ff ff ff ff ff ff ff ff ff ff ff
  Address 0x40: ff ff ff ff 01 49 50 55 43 42 45 4e 43 41 41 4d
  Address 0x50: 58 32 30 30 30 2d 46 41 4e 54 52 41 59 2d 53 00
  Address 0x60: 00 00 00 00 00 00 31 ff ff ff ff ff ff ff ff ff
  Address 0x70: ff ff ff 1a ff ff ff ff ff ff ff ff ff ff ff ff
Fan Tray 1       REV 01   760-052467   ACAY6414          172mm FanTray - 6 Fans
 Jedec Code:   0x7fb0            EEPROM Version:    0x02
 P/N:          760-052467        S/N:               ACAY6414
 Assembly ID:  0x0b96            Assembly Version:  02.10
 Date:         10-28-2015        Assembly Flags:    0x00
 Version:      REV 01            CLEI Code:         IPUCBENCAA
 ID: 172mm FanTray - 6 Fans      FRU Model Number:  MX2000-FANTRAY-S
 Board Information Record:
  Address 0x00: ff ff ff ff ff ff ff ff ff ff ff ff ff ff ff ff
 I2C Hex Data:
  Address 0x00: 7f b0 02 ff 0b 96 02 0a 52 45 56 20 30 31 00 00
  Address 0x10: 00 00 00 00 37 36 30 2d 30 35 32 34 36 37 00 00
  Address 0x20: 53 2f 4e 20 41 43 41 59 36 34 31 34 00 1c 0a 07
  Address 0x30: df ff ff ff ff ff ff ff ff ff ff ff ff ff ff ff
  Address 0x40: ff ff ff ff 01 49 50 55 43 42 45 4e 43 41 41 4d
  Address 0x50: 58 32 30 30 30 2d 46 41 4e 54 52 41 59 2d 53 00
  Address 0x60: 00 00 00 00 00 00 31 ff ff ff ff ff ff ff ff ff
  Address 0x70: ff ff ff 1a ff ff ff ff ff ff ff ff ff ff ff ff
```

show chassis hardware models (MX2008 Router)

```
user@host>show chassis hardware models
Hardware inventory:
Item             Version  Part number  Serial number     FRU model number
Midplane         REV 47   750-044636   ABAD1739          CHAS-BP-MX2010-S
```

```
PMP              REV 01   711-051406   ACVD0738
FPM Board        REV 02   760-068193   ABDG7408          PROTO-ASSEMBLY
PSM 1            REV 06   740-050037   1EDB61200R8       MX2000-PSM-DC-S
PSM 2            REV 06   740-050037   1EDB61200WA       MX2000-PSM-DC-S
PSM 3            REV 06   740-050037   1EDB61200NY       MX2000-PSM-DC-S
PSM 4            REV 06   740-050037   1EDB61200N2       MX2000-PSM-DC-S
PSM 5            REV 06   740-050037   1EDB61200RN       MX2000-PSM-DC-S
PSM 6            REV 06   740-050037   1EDB61200RF       MX2000-PSM-DC-S
PSM 7            REV 06   740-050037   1EDB61200R7       MX2000-PSM-DC-S
PDM 0            REV 01   740-060189   1EFF5250143       MX2K-PDM-OP-DC-S
PDM 1            REV 01   740-060189   1EFF5250074       MX2K-PDM-OP-DC-S
CB 0             REV 01   750-067373   ABDJ0047          PROTO-ASSEMBLY
CB 1             REV 03   750-067373   ABDH3016          PROTO-ASSEMBLY
SFB 0            REV 08   750-067371   ABDK7180          PROTO-ASSEMBLY
SFB 1            REV 08   750-067371   ABDK7024          PROTO-ASSEMBLY
SFB 2            REV 08   750-067371   ABDK7188          PROTO-ASSEMBLY
SFB 3            REV 08   750-067371   ABDK7143          PROTO-ASSEMBLY
SFB 4            REV 08   750-067371   ABDK7030          PROTO-ASSEMBLY
SFB 5            REV 08   750-067371   ABDK7146          PROTO-ASSEMBLY
SFB 6            REV 08   750-067371   ABDK7203          PROTO-ASSEMBLY
SFB 7            REV 08   750-067371   ABDK7238          PROTO-ASSEMBLY
FPC 0            REV 36   750-044130   ABCS8607          PROTO-ASSEMBLY
  MIC 0          REV 21   750-050008   ABCT5920          MIC6-100G-CXP
FPC 1            REV 22   750-063414   CAFJ3026          MX2K-MPC9E
FPC 7            REV 08   750-038492   ZX4080            MX-MPC2E-3D-EQ
  MIC 0          REV 05   750-037128   ZR4031            MIC-3D-4CHOC3-1OC12-CE
  MIC 1          REV 23   750-032479   CADE8614          MIC-3D-8DS3-E3
ADC 7            REV 17   750-043596   ABCA0990          MX2000-LC-ADAPTER
Fan Tray 0       REV 01   760-052467   ACAY6190          MX2000-FANTRAY-S
Fan Tray 1       REV 01   760-052467   ACAY6414          MX2000-FANTRAY-S
```

show chassis hardware clei-models (MX2008 Router)

```
user@host>show chassis hardware clei-models
Hardware inventory:
Item             Version  Part number  CLEI code         FRU model number
Midplane         REV 47   750-044636   IPMU810ARB        CHAS-BP-MX2010-S
PMP              REV 01   711-051406
FPM Board        REV 02   760-068193   PROTOXCLEI        PROTO-ASSEMBLY
PSM 1            REV 06   740-050037   IPUPAPDKAA        MX2000-PSM-DC-S
PSM 2            REV 06   740-050037   IPUPAPDKAA        MX2000-PSM-DC-S
PSM 3            REV 06   740-050037   IPUPAPDKAA        MX2000-PSM-DC-S
PSM 4            REV 06   740-050037   IPUPAPDKAA        MX2000-PSM-DC-S
PSM 5            REV 06   740-050037   IPUPAPDKAA        MX2000-PSM-DC-S
PSM 6            REV 06   740-050037   IPUPAPDKAA        MX2000-PSM-DC-S
PSM 7            REV 06   740-050037   IPUPAPDKAA        MX2000-PSM-DC-S
PDM 0            REV 01   740-060189   IPUPAN1KAA        MX2K-PDM-OP-DC-S
PDM 1            REV 01   740-060189   IPUPAN1KAA        MX2K-PDM-OP-DC-S
CB 0             REV 01   750-067373   PROTOXCLEI        PROTO-ASSEMBLY
CB 1             REV 03   750-067373   PROTOXCLEI        PROTO-ASSEMBLY
SFB 0            REV 08   750-067371   PROTOXCLEI        PROTO-ASSEMBLY
SFB 1            REV 08   750-067371   PROTOXCLEI        PROTO-ASSEMBLY
SFB 2            REV 08   750-067371   PROTOXCLEI        PROTO-ASSEMBLY
SFB 3            REV 08   750-067371   PROTOXCLEI        PROTO-ASSEMBLY
SFB 4            REV 08   750-067371   PROTOXCLEI        PROTO-ASSEMBLY
SFB 5            REV 08   750-067371   PROTOXCLEI        PROTO-ASSEMBLY
SFB 6            REV 08   750-067371   PROTOXCLEI        PROTO-ASSEMBLY
SFB 7            REV 08   750-067371   PROTOXCLEI        PROTO-ASSEMBLY
FPC 0            REV 36   750-044130   PROTOXCLEI        PROTO-ASSEMBLY
  MIC 0          REV 21   750-050008   IP9IATYDAA        MIC6-100G-CXP
FPC 1            REV 22   750-063414   IPUCBMUCAA        MX2K-MPC9E
```

```
FPC 7            REV 08   750-038492   COUIBA5BAA        MX-MPC2E-3D-EQ
  MIC 0          REV 05   750-037128   PROTOXCLEI        MIC-3D-4CHOC3-1OC12-CE
  MIC 1          REV 23   750-032479   COUIA8DBAA        MIC-3D-8DS3-E3
ADC 7            REV 17   750-043596   IPUCBA8CAA        MX2000-LC-ADAPTER
Fan Tray 0       REV 01   760-052467   IPUCBENCAA        MX2000-FANTRAY-S
Fan Tray 1       REV 01   760-052467   IPUCBENCAA        MX2000-FANTRAY-S
```

show chassis hardware (MX10003 Router)

```
user@host> show chassis hardware

Hardware inventory:
Item             Version  Part number  Serial number     Description
Chassis                                BLANK             JNP10003 [MX10003]
Midplane         REV 01   750-066883   CAGM0759          Midplane 2
Routing Engine 0          BUILTIN      BUILTIN           Routing Engine
Routing Engine 1          BUILTIN      BUILTIN           Routing Engine
CB 0             REV 07   750-067071   CAGX4354          SPM
  Mezz           REV 10   711-066896   CAHS7200          SPM Mezz Board
CB 1             REV 07   750-067071   CAGX4363          SPM
  Mezz           REV 10   711-066896   CAHS7193          SPM Mezz Board
FPC 0            REV 05   750-066879   CAGV0273          LC2103
  CPU                     BUILTIN      BUILTIN           SMPC PMB
  PIC 0
  PIC 1
FPC 1            REV 05   750-066879   CAGV0278          LC2103
  CPU                     BUILTIN      BUILTIN           SMPC PMB
  PIC 0                   BUILTIN      BUILTIN           6xQSFPP
  PIC 1
PEM 0            REV 01   740-066937   1HS16320003       JNP-PWR1600-AC
PEM 1            REV 01   740-066937   1HS16320002       JNP-PWR1600-AC
Fan Tray 0       REV 02   760-069329   CAGS7731          JNP FAN 3RU
Fan Tray 1       REV 02   760-069329   CAGS7776          JNP FAN 3RU
Fan Tray 2       REV 02   760-069329   CAGS7659          JNP FAN 3RU
Fan Tray 3       REV 02   760-069329   CAGS7669          JNP FAN 3RU
```

show chassis hardware (MX204 Router)

```
user@host> show chassis hardware

Hardware inventory:
Item             Version  Part number  Serial number     Description
Chassis                                BB768             JNP204 [MX204]
Routing Engine 0          BUILTIN      BUILTIN           RE-S-2X00x6
CB 0             REV 11   750-069579   CAJD3113          JNP204 [MX204]
FPC 0                     BUILTIN      BUILTIN           MPC
  PIC 0                   BUILTIN      BUILTIN           4XQSFP28 PIC
    Xcvr 0       REV 01   740-061405   1ACQ110409R       QSFP-100GBASE-SR4
    Xcvr 1       REV 01   740-054053   QF027546          QSFP+-4X10G-SR
    Xcvr 2       REV 01   740-058732   1AMQA142092       QSFP-100GBASE-LR4
    Xcvr 3       REV 01   740-058732   1AMQA14203J       QSFP-100GBASE-LR4
  PIC 1                   BUILTIN      BUILTIN           8XSFPP PIC
PEM 1            REV 04   740-043886   1GA46361256       JPSU-650W-DC-AFO
Fan Tray 0                                               Fan Tray, Front to Back
 Airflow - AFO
Fan Tray 1                                               Fan Tray, Front to Back
 Airflow - AFO
Fan Tray 2                                               Fan Tray, Front to Back
 Airflow - AFO
```

show chassis hardware (vMX running in lite mode)

```
user@host> show chassis hardware
Hardware inventory:
Item             Version  Part number  Serial number     Description
Chassis                                VM54599D128A      VMX
Midplane
Routing Engine 0                                         RE-VMX
CB 0                                                     VMX SCB
CB 1                                                     VMX SCB
FPC 0                                                    Virtual FPC
  CPU            Rev. 1.0 RIOT-LITE    BUILTIN
  MIC 0                                                  Virtual
    PIC 0                BUILTIN      BUILTIN           Virtual
```

show chassis hardware (vMX running in performance mode)

```
user@host> show chassis hardware
Hardware inventory:
Item             Version  Part number  Serial number     Description
Chassis                                VM54599D128A      VMX
Midplane
Routing Engine 0                                         RE-VMX
CB 0                                                     VMX SCB
CB 1                                                     VMX SCB
FPC 0                                                    Virtual FPC
  CPU            Rev. 1.0 RIOT-PERF    BUILTIN
  MIC 0                                                  Virtual
    PIC 0                BUILTIN      BUILTIN           Virtual
```

show chassis hardware (T320 Router)

```
user@host> show chassis hardware
Hardware inventory:
Item             Version  Part number  Serial number     Description
Chassis                                19093             T320
Midplane         REV 04   710-004339   BC1436            T320 Backplane
FPM GBUS         REV 03   710-004461   BC1407            T320 FPM Board
FPM Display      REV 04   710-002897   BE0763            FPM Display
CIP              REV 05   710-002895   BB2311            T Series CIP
PEM 0            Rev 01   740-004359   NB12546           Power Entry Module
SCG 0            REV 06   710-004455   AY4522            T320 Sonet
Clock Gen.
Routing Engine 0                                         unknown
CB 0             REV 13   710-002728   BC1577            T Series
Control Board
CB 1             REV 13   710-002728   BC1595            T Series
Control Board
FPC 1            REV 09   710-007531   HS1572            FPC Type 2
   CPU            REV 15   710-001726   HR8763            FPC CPU
   PIC 0          REV 01   750-010618   CB5579            4x G/E SFP,
1000 BASE
     SFP 0        REV 01   740-007326   P5809Z1           SFP-SX
     SFP 1        REV 01   740-007326   P4Q10XU           SFP-SX
     SFP 2                 NON-JNPR     RA45020031        SFP-SX
     SFP 3                 NON-JNPR     RA45020032        SFP-SX
   PIC 1          REV 01   750-010618   CD9587            4x G/E SFP,
1000 BASE
     SFP 0                 NON-JNPR     P5A08QZ           SFP-T
     SFP 1        REV 01   740-007326   P4Q133K           SFP-SX
```

```
     SFP 2        REV 01   740-007326   P5809YY           SFP-SX
     SFP 3        REV 01   740-007327   4C81704           SFP-LX
   MMB 1          REV 03   710-005555   HR9401            MMB-288mbit
   PPB 0          REV 04   710-003758   HR2886            PPB Type 2
FPC 2            REV 07   710-005860   HP2392            FPC Type 1
   CPU            REV 14   710-001726   HP7797            FPC CPU
   PIC 0          REV 02   750-007643   HM0853            1x G/E QPP,
1000 BASE
     SFP 0        REV 01   740-007326   P11E9JJ           SFP-SX
   MMB 1          REV 02   710-005555   HN2379            MMB-288mbit
   PPB 0          REV 04   710-003758   HP8092            PPB Type 2
FPC 3            REV 07   710-005860   HP2393            FPC Type 1
   CPU            REV 14   710-001726   HP0968            FPC CPU
   PIC 0          REV 01   750-010240   CB5363            1x G/E SFP,
1000 BASE
     SFP 0        REV 01   740-007326   P4R0PNH           SFP-SX
   PIC 1          REV 03   750-003034   HD2832            4x OC-3 SONET,
SMIR
   MMB 1          REV 02   710-005555   HN6307            MMB-288mbit
   PPB 0          REV 04   710-003758   HP5051            PPB Type 2
FPC 4            REV 01   710-010845   JD3872            FPC Type 4
   CPU            REV 02   710-011481   JB6042            FPC CPU
 5            REV 01   710-005802   BC1566            FPC Type 2
   CPU            REV 09   710-001726   AY4922            FPC CPU
   PIC 0          REV 02   750-008155   BE2114            2x G/E QPP,
1000 BASE
     SFP 0        REV 01   740-007326   P4R0PMQ           SFP-SX
     SFP 1        REV 01   740-007326   P4R0PN9           SFP-SX
   PIC 1          REV 01   750-008155   BE2116            2x G/E QPP,
1000 BASE
     SFP 0        REV 01   740-007326   P4R0PNZ           SFP-SX
     SFP 1                 NON-JNPR     2908              SFP-T
   MMB 1          REV 01   710-005555   AZ2246            MMB-288mbit
   PPB 0          REV 03   710-003758   AY4839            PPB Type 2
FPC 7            REV 01   710-005803   AZ2123            FPC Type 3
...
```

show chassis hardware (T640 Router)

```
user@host> show chassis hardware
Hardware inventory:
Item             Version  Part number  Serial number     Description
Chassis                                19182             T640
Midplane         REV 04   710-002726   AX5608            T640 Backplane
FPM GBUS         REV 02   710-002901   HE3064            T640 FPM Board
FPM Display      REV 02   710-002897   HE7864            FPM Display
CIP              REV 05   710-002895   HA5024            T Series CIP
PEM 0            Rev 02   740-029522   VH26235           AC PEM 10kW US
PEM 1            Rev 02   740-029522   VH26230           AC PEM 10kW US
SCG 0            REV 03   710-003423   HA4508            T640 Sonet Clock Gen.
Routing Engine 0 REV 02   740-005022   210865700483      RE-3.0 (RE-600)
CB 0             REV 01   710-002728   HD3044            T Series Control Board
FPC 2            REV 04   710-001721   HD5572            FPC Type 3
  CPU            REV 06   710-001726   HA4712            FPC CPU
  PIC 1          REV 03   750-009567   HV2331            1x 10GE(LAN),XENPAK
    SFP 0        REV 01   740-009898   USC202R103        XENPAK-SR
  PIC 2          REV 03   750-009567   HV2332            1x 10GE(LAN),XENPAK
    SFP 0        REV 01   740-011268   USC202R112        XENPAK-ZR
  PIC 3          REV 03   750-009567   HX4416            1x 10GE(LAN),XENPAK
    SFP 0        REV 01   740-012056   434TC004          XENPAK-CX4
  PIC 4          REV 03   750-009567   HX4420            1x 10GE(LAN),XENPAK
```

```
    SFP 0        REV 01   740-012058   434TC124          XENPAK-LX4
FPC 5            REV 01   710-013553   JE4839            E2-FPC Type 1
  CPU            REV 01   710-013569   JW9163            FPC CPU
  PIC 0          REV 01   750-009567   HX4419            1x 10GE(LAN),XENPAK
    SFP 0        REV 01   740-009898   USC202RT05        XENPAK-LR
  PIC 1          REV 03   750-009567   HN7426            1x 10GE(LAN),XENPAK
    SFP 0        REV 01   740-009550   03L90051          XENPAK-ER
  PIC 2          REV 03   750-009467   HT7423            1x 10GE(LAN),XENPAK
    SFP 0                 NON-JNPR                       UNKNOWON
  PIC 3          REV 04   750-005100   AY4850            1x 10GE(LAN),DWDM
FPC 4            REV 01   710-010845   JD3872            FPC Type 4
  CPU            REV 02   710-011481   JB6042            FPC CPU
Fan Tray 0                                               Front Top Fan Tray
Fan Tray 1                                               Front Bottom Fan Tray
Fan Tray 2                                               Rear Fan Tray
```

show chassis hardware models (T640 Router)

```
user@host> show chassis hardware models
Hardware inventory:
Item             Version  Part number  CLEI code         FRU model number
Midplane         REV 04   710-002726                     CHAS-BP-T640-S
FPM Display      REV 02   710-002897                     CRAFT-T640-S
CIP              REV 05   710-002895                     CIP-L-T640-S
PEM 0            Rev 01   740-002595                     PWR-T-DC-S
SCG 0            REV 04   710-003423                     SCG-T-S
SCG 1            REV 04   710-003423                     SCG-T-S
Routing Engine 0 REV 01   740-005022                     RE-600-2048-S
Routing Engine 1 REV 07   740-005022                     RE-600-2048-S
CB 0             REV 06   710-002726                     CHAS-BP-T640-S
CB 1             REV 06   710-002728                     CB-L-T-S
FPC 5            REV 05   710-007527                     T640-FPC2
  PIC 0          REV 05   750-002510                     PB-2GE-SX
  PIC 1          REV 05   750-001901                     PB-4OC12-SON-SMIR
FPC 6            REV 03   710-001721                     T640-FPC3
  PIC 1          REV 01   750-009553                     PC-4OC48-SON-SFP
SIB 4            REV 02   750-005486                     SIB-I-T640-S
Fan Tray 0                                               FANTRAY-T-S
Fan Tray 1                                               FANTRAY-T-S
Fan Tray 2                                               FAN-REAR-TX-T640-S
```

show chassis hardware extensive (T640 Router)

```
user@host> show chassis hardware extensive
Hardware inventory:
Item             Version  Part number  Serial number     Description
Chassis                                                   T640
 Jedec Code:   0x7fb0           EEPROM Version:    0x01
 P/N:        ...........       S/N:             ...........
 Assembly ID:  0x0507           Assembly Version:  00.00
 Date:         00-00-0000       Assembly Flags:    0x00
 Version:    ...........
 ID: Gibson LCC Chassis
 Board Information Record:
  Address 0x00: 00 00 00 00 00 00 00 00 00 00 00 00 00 00 00 00
 I2C Hex Data:
  Address 0x00: 7f b0 01 ff 05 07 00 00 00 00 00 00 00 00 00 00
  Address 0x10: 00 00 00 00 00 00 00 00 00 00 00 00 00 00 00 00
  Address 0x20: ff ff ff ff ff ff ff ff ff ff ff ff 00 00 00 00
  Address 0x30: 00 00 00 00 00 00 00 00 00 00 00 00 00 00 00 00
```

```
  Address 0x40: 00 00 00 00 00 00 00 00 00 00 00 00 00 00 00 00
Midplane         REV 04   710-002726   AX5633
 Jedec Code:   0x7fb0            EEPROM Version:    0x01
 P/N:          710-002726.       S/N:               AX5633.
 Assembly ID:  0x0127            Assembly Version:  01.04
 Date:         06-27-2001        Assembly Flags:    0x00
 Version:      REV 04.....
 ID: Gibson Backplane
 Board Information Record:
  Address 0x00: ad 01 08 00 00 90 69 0e f8 00 ff ff ff ff ff ff
 I2C Hex Data:
  Address 0x00: 7f b0 01 ff 01 27 01 04 52 45 56 20 30 34 00 00
  Address 0x10: 00 00 00 00 37 31 30 2d 30 30 32 37 32 36 00 00
  Address 0x20: 53 2f 4e 20 41 58 35 36 33 33 00 00 00 1b 06 07
  Address 0x30: d1 ff ff ff ad 01 08 00 00 90 69 0e f8 00 ff ff
  Address 0x40: ff ff ff ff ff ff ff ff ff ff ff ff ff ff ff ff
FPM GBUS         REV 02   710-002901   HE3245
 ...
FPM Display      REV 02   710-002897   HA4873
 ...
CIP              REV 05   710-002895   HA4729
...
PEM 1            RevX02   740-002595   MD21815           Power Entry Module
 ...
SCG 0            REV 04   710-003423   HF6023
 ...
SCG 1            REV 04   710-003423   HF6061
 ...
Routing Engine 0 REV 01   740-005022   210865700292      RE-3.0
...
CB 0             REV 06   710-002728   HE3614
...
FPC 1            REV 01   710-002385   HE3009            FPC Type 1
...              REV 06   710-001726   HC0010
```

show chassis hardware (T4000 Router)

```
user@host> show chassis hardware
Hardware inventory:
Item             Version  Part number  Serial number     Description
Chassis                                JN1172F25AHA      T4000
Midplane         REV 01   710-027486   RC8355            T-series Backplane
FPM GBUS         REV 13   710-002901   BBAE0927          T640 FPM Board
FPM Display      REV 01   710-021387   EF6764            T1600 FPM Display
CIP              REV 06   710-002895   BBAD9210          T-series CIP
PEM 0            REV 01   740-036442   VA00016           Power Entry Module 6x60
SCG 0            REV 18   710-003423   BBAD7248          T640 Sonet Clock Gen.
SCG 1            REV 18   710-003423   BBAE3874          T640 Sonet Clock Gen.
Routing Engine 0 REV 05   740-026941   P737F-002248      RE-DUO-1800
Routing Engine 1 REV 06   740-026941   P737F-002653      RE-DUO-1800
CB 0             REV 09   710-022597   ED0295            LCC Control Board
CB 1             REV 09   710-022597   EA6050            LCC Control Board
FPC 0            REV 26   750-032819   EK1173            FPC Type 5-3D
  CPU            REV 12   711-030686   EJ8584            SNG PMB
  PIC 0          REV 07   750-034624   EF6837            12x10GE (LAN/WAN) SFPP
    Xcvr 0       REV 01   740-031980   123363A01145      SFP+-10G-SR
    Xcvr 1       REV 01   740-031980   123363A01147      SFP+-10G-SR
    Xcvr 2       REV 01   740-031980   AJJ01P3           SFP+-10G-SR
    Xcvr 3       REV 01   740-031980   B10M03256         SFP+-10G-SR
    Xcvr 4       REV 01   740-031980   AJJ01M2           SFP+-10G-SR
    Xcvr 5       REV 01   740-031980   123363A01137      SFP+-10G-SR
```

```
    Xcvr 6       REV 01   740-031980   AJJ01PN           SFP+-10G-SR
    Xcvr 7       REV 01   740-031980   AJJ01NW           SFP+-10G-SR
    Xcvr 8       REV 01   740-031980   123363A01139      SFP+-10G-SR
    Xcvr 9       REV 01   740-031980   AJJ01KE           SFP+-10G-SR
    Xcvr 10      REV 01   740-031980   123363A01336      SFP+-10G-SR
    Xcvr 11      REV 01   740-031980   B10M01325         SFP+-10G-SR
  PIC 1          REV 07   750-034624   EF6800            12x10GE (LAN/WAN) SFPP
    Xcvr 0       REV 01   740-031980   AJJ01SA           SFP+-10G-SR
    Xcvr 1       REV 01   740-031980   AJJ01QZ           SFP+-10G-SR
    Xcvr 2       REV 01   740-031980   AJH0217           SFP+-10G-SR
    Xcvr 3       REV 01   740-031980   AJJ01TE           SFP+-10G-SR
    Xcvr 4       REV 01   740-031980   AJJ01KV           SFP+-10G-SR
    Xcvr 5       REV 01   740-031980   AJJ01MU           SFP+-10G-SR
    Xcvr 6       REV 01   740-031980   AJJ01R0           SFP+-10G-SR
    Xcvr 7       REV 01   740-031980   AJJ01TC           SFP+-10G-SR
    Xcvr 8       REV 01   740-031980   AJJ0364           SFP+-10G-SR
    Xcvr 9       REV 01   740-031980   AJD0GV3           SFP+-10G-SR
    Xcvr 10      REV 01   740-031980   B10M03343         SFP+-10G-SR
    Xcvr 11      REV 01   740-031980   AJJ01QJ           SFP+-10G-SR
  LMB 0          REV 05   711-034381   EJ8490            Type-0 LMB
  LMB 1          REV 04   711-035774   EJ8517            Type-1 LMB
  LMB 2          REV 05   711-034381   EJ8489            Type-0 LMB
FPC 3            REV 07   750-032819   EG3637            FPC Type 5-3D
  CPU            REV 09   711-030686   EG0150            SNG PMB
  PIC 0          REV 08   750-035293   EF3657            1x100GE
    Xcvr 0       REV 01   740-032210   C22CQNJ           CFP-100G-LR4
  PIC 1          REV 10   750-034624   BBAN4098          12x10GE (LAN/WAN) SFPP
    Xcvr 0       REV 01   740-031980   B11J04902         SFP+-10G-SR
    Xcvr 1       REV 01   740-031980   B11J04891         SFP+-10G-SR
    Xcvr 2       REV 01   740-031980   AJJ01MX           SFP+-10G-SR
    Xcvr 3       REV 01   740-031980   B11J04183         SFP+-10G-SR
    Xcvr 4       REV 01   740-031980   B11J04894         SFP+-10G-SR
    Xcvr 5       REV 01   740-031980   B11J04184         SFP+-10G-SR
    Xcvr 6       REV 01   740-031980   B11J04897         SFP+-10G-SR
    Xcvr 7       REV 01   740-031980   B11J04899         SFP+-10G-SR
    Xcvr 8       REV 01   740-031980   AJJ01TV           SFP+-10G-SR
    Xcvr 9       REV 01   740-031980   B11J04057         SFP+-10G-SR
    Xcvr 10      REV 01   740-031980   AJJ01M4           SFP+-10G-SR
    Xcvr 11      REV 01   740-031980   B11J04905         SFP+-10G-SR
  LMB 0          REV 04   711-034381   EG1524            Type-0 LMB
  LMB 1          REV 03   711-035774   EG0345            Type-1 LMB
  LMB 2          REV 04   711-034381   EG1522            Type-0 LMB
FPC 5            REV 03   710-033871   BBAJ0768          FPC Type 4-ES
  CPU            REV 11   710-016744   BBAH9342          ST-PMB2
  PIC 0          REV 09   750-029262   EE6789            100GE
  PIC 1          REV 03   750-034781   EE6655            100GE CFP
    Xcvr 0       REV 01   740-032210   J11A22334         CFP-100G-LR4
  BRIDGE 0       REV 03   711-029995   EE6572            100GE Bridge Board
  MMB 0          REV 07   710-025563   BBAJ4657          ST-MMB2
  MMB 1          REV 07   710-025563   BBAJ3073          ST-MMB2
FPC 6            REV 05   750-010153   EF4936            FPC Type 5-3D
  CPU            REV 06   711-030686   EF4189            SNG PMB
  PIC 0          REV 10   750-034624   BBAN4109          12x10GE (LAN/WAN) SFPP
    Xcvr 0       REV 01   740-031980   B11J04895         SFP+-10G-SR
    Xcvr 1       REV 01   740-031980   B11J04898         SFP+-10G-SR
    Xcvr 2       REV 01   740-031980   B11J04021         SFP+-10G-SR
    Xcvr 3       REV 01   740-031980   B11J04903         SFP+-10G-SR
    Xcvr 4       REV 01   740-031980   B11J04311         SFP+-10G-SR
    Xcvr 5       REV 01   740-031980   B11J04059         SFP+-10G-SR
    Xcvr 6       REV 01   740-031980   B11J04016         SFP+-10G-SR
    Xcvr 7       REV 01   740-031980   B11J04017         SFP+-10G-SR
```

```
    Xcvr 8       REV 01   740-031980   B11J04887         SFP+-10G-SR
    Xcvr 9       REV 01   740-031980   B11J04297         SFP+-10G-SR
    Xcvr 10      REV 01   740-031980   B11J04893         SFP+-10G-SR
    Xcvr 11      REV 01   740-031980   B11J04022         SFP+-10G-SR
  PIC 1          REV 02   750-034624   EE3711            12x10GE (LAN/WAN) SFPP
    Xcvr 0       REV 01   740-031980   AJH033X           SFP+-10G-SR
    Xcvr 1       REV 01   740-031980   AJJ01N0           SFP+-10G-SR
    Xcvr 2       REV 01   740-031980   AJJ01SV           SFP+-10G-SR
    Xcvr 3       REV 01   740-031980   AJJ032L           SFP+-10G-SR
    Xcvr 4       REV 01   740-031980   B10M01593         SFP+-10G-SR
    Xcvr 5       REV 01   740-031980   AJD0FF1           SFP+-10G-SR
    Xcvr 6       REV 01   740-031980   AJJ01NU           SFP+-10G-SR
    Xcvr 7       REV 01   740-031980   123363A01305      SFP+-10G-SR
    Xcvr 8       REV 01   740-031980   B10M00361         SFP+-10G-SR
    Xcvr 9       REV 01   740-031980   AJJ01M7           SFP+-10G-SR
    Xcvr 10      REV 01   740-031980   AJJ032X           SFP+-10G-SR
    Xcvr 11      REV 01   740-031980   AJJ01PG           SFP+-10G-SR
  LMB 0          REV 04   711-034381   EF3838            Type-0 LMB
  LMB 1          REV 03   711-035774   EF3821            Type-1 LMB
  LMB 2          REV 04   711-034381   EF3834            Type-0 LMB
SPMB 0           REV 05   710-023321   ED1990            LCC Switch CPU
SPMB 1           REV 05   710-023321   EA2768            LCC Switch CPU
SIB 0            REV 02   711-036340   EF8802            SIB-HC-3D
SIB 1            REV 07   711-036340   EG2286            SIB-HC-3D
SIB 2            REV 07   711-036340   EG2252            SIB-HC-3D
SIB 3            REV 02   711-036340   EF1358            SIB-HC-3D
SIB 4            REV 02   711-036340   EF8806            SIB-HC-3D
Fan Tray 0                                               Front Top Fan Tray
Fan Tray 1                                               Front Bottom Fan Tray
-- Rev 2
Fan Tray 2                                               Rear Fan Tray -- Rev 3
```

show chassis hardware (T4000 Router with 16-GB Line Card Chassis (LCC) Routing Engine)

```
user@host> show chassis hardware
Hardware inventory:
Item             Version  Part number  Serial number     Description
Chassis                                JN11BDF2CAHA      T1600
Midplane         REV 01   710-027486   ACAJ0774          T640 Backplane
FPM GBUS         REV 13   710-002901   BBAL6812          T640 FPM Board
FPM Display      REV 04   710-021387   BBAP2679          T1600 FPM Display
CIP              REV 06   710-002895   BBAP4758          T-series CIP
PEM 0            Rev 03   740-026384   XF86421           Power Entry Module 3x80
PEM 1            Rev 03   740-026384   XF86429           Power Entry Module 3x80
SCG 0            REV 18   710-003423   BBAP1896          T640 Sonet Clock Gen.
SCG 1            REV 18   710-003423   BBAN8659          T640 Sonet Clock Gen.
Routing Engine 0 REV 01   740-042243   737F-002238       RE-DUO-1800-16G
Routing Engine 1 REV 01   740-042243   737F-002403       RE-DUO-1800-16G
CB 1             REV 11   710-022597   EK4526            LCC Control Board
CB 1             REV 11   710-022597   EK4527            LCC Control Board
FPC 0            REV 05   710-033871   EK5644            FPC Type 4-ES
  CPU            REV 11   710-016744   EK3428            ST-PMB2
  PIC 0          REV 20   750-017405   EJ3041            4x 10GE (LAN/WAN) XFP
  PIC 1          REV 17   750-026962   EH7536            10x10GE(LAN/WAN) SFPP
  MMB 0          REV 07   710-025563   EK6039            ST-MMB2
  MMB 1          REV 07   710-025563   EK6086            ST-MMB2
FPC 1            REV 05   710-033871   EK6583            FPC Type 4-ES
  CPU            REV 11   710-016744   EK3401            ST-PMB2
  PIC 0          REV 17   750-026962   EJ8948            10x10GE(LAN/WAN) SFPP
  MMB 0          REV 07   710-025563   EK6202            ST-MMB2
  MMB 1          REV 07   710-025563   EK6112            ST-MMB2
```

```
SPMB 1           REV 05   710-023321   EK4900           LCC Switch CPU
SIB 0            REV 11   710-013074   EK5958           SIB-I8-SF
SIB 1            REV 11   710-013074   EK4606           SIB-I8-SF
SIB 2            REV 11   710-013074   EK5971           SIB-I8-SF
SIB 3            REV 11   710-013074   EK4609           SIB-I8-SF
SIB 4            REV 11   710-013074   EK4602           SIB-I8-SF
Fan Tray 0                                              Front Top Fan Tray
Fan Tray 1                                              Front Bottom Fan Tray
Fan Tray 2                                              Rear Fan Tray -- Rev 2
```

show chassis hardware (T4000 Router with LSR FPC)

```
user@host> show chassis hardware
Hardware inventory:
Item             Version  Part number  Serial number     Description
Chassis                                JN1173A24AHA      T4000
FPC 3            REV      750-048373   AN7797            FPC Type 5-LSR
  CPU            REV 10   711-030686   AN6649            SNG PMB
  PIC 0          REV 07   750-034624   EF6830            12x10GE (LAN/WAN) SFPP
```

show chassis hardware clei-models (T4000 Router)

```
user@host> show chassis hardware clei-models
Hardware inventory:
Item             Version  Part number  CLEI code         FRU model number
Midplane         REV 01   710-027486   IPMJ700DRD        CHAS-BP-T1600-S
FPM Display      REV 01   710-021387                      CRAFT-T1600-S
CIP              REV 06   710-002895                      CIP-L-T640-S
PEM 0            REV 01   740-036442   IPUPAG6KAA        PWR-T-6-60-DC
SCG 0            REV 18   710-003423                      SCG-T-S
SCG 1            REV 18   710-003423                      SCG-T-S
Routing Engine 0 REV 05   740-026941                      RE-DUO-C1800-8G-S
Routing Engine 1 REV 06   740-026941                      RE-DUO-C1800-8G-S
CB 0             REV 09   710-022597                      CB-LCC-S
CB 1             REV 09   710-022597                      CB-LCC-S
FPC 3
  PIC 0          REV 08   750-035293   XXXXXXXXBB        PF-1CGE-CFP
  PIC 1          REV 10   750-034624   XXXXXXXXCC        PF-12XGE-SFPP
FPC 5            REV 03   710-033871   IPUCAMBCTD        T1600-FPC4-ES
  PIC 1          REV 03   750-034781   IPUIBKLMAA        PD-1CE-CFP-FPC4
FPC 6
  PIC 0          REV 10   750-034624   XXXXXXXXCC        PF-12XGE-SFPP
Fan Tray 0                                               FANTRAY-T-S
Fan Tray 1                                               FANTRAY-T4000-S
Fan Tray 2                                               FANTRAY-TXP-R-S
```

show chassis hardware detail (T4000 Router)

```
user@host> show chassis hardware detail
Hardware inventory:
Item             Version  Part number  Serial number     Description
Chassis                                JN1172F25AHA      T4000
Midplane         REV 01   710-027486   RC8355            T-series Backplane
FPM GBUS         REV 13   710-002901   BBAE0927          T640 FPM Board
FPM Display      REV 01   710-021387   EF6764            T1600 FPM Display
CIP              REV 06   710-002895   BBAD9210          T-series CIP
PEM 0            REV 01   740-036442   VA00016           Power Entry Module 6x60
SCG 0            REV 18   710-003423   BBAD7248          T640 Sonet Clock Gen.
SCG 1            REV 18   710-003423   BBAE3874          T640 Sonet Clock Gen.
Routing Engine 0 REV 05   740-026941   P737F-002248      RE-DUO-1800
```

```
  ad0    3823 MB  SMART CF             2009121602A661576157 Compact Flash
  ad1   59690 MB  STEC MACH-8 SSD      STM000103FDB      Disk 1
Routing Engine 1 REV 06   740-026941   P737F-002653      RE-DUO-1800
  ad0    3823 MB  SMART CF             201011150153F52CF52C Compact Flash
  ad1   62720 MB  SMART Lite SATA Drive 2010110900150A880A88 Disk 1
CB 0             REV 09   710-022597   ED0295            LCC Control Board
CB 1             REV 09   710-022597   EA6050            LCC Control Board
FPC 0            REV 26   750-032819   EK1173            FPC Type 5-3D
  CPU            REV 12   711-030686   EJ8584            SNG PMB
  PIC 0          REV 07   750-034624   EF6837            12x10GE (LAN/WAN) SFPP
    Xcvr 0       REV 01   740-031980   123363A01145      SFP+-10G-SR
    Xcvr 1       REV 01   740-031980   123363A01147      SFP+-10G-SR
    Xcvr 2       REV 01   740-031980   AJJ01P3           SFP+-10G-SR
    Xcvr 3       REV 01   740-031980   B10M03256         SFP+-10G-SR
    Xcvr 4       REV 01   740-031980   AJJ01M2           SFP+-10G-SR
    Xcvr 5       REV 01   740-031980   123363A01137      SFP+-10G-SR
    Xcvr 6       REV 01   740-031980   AJJ01PN           SFP+-10G-SR
    Xcvr 7       REV 01   740-031980   AJJ01NW           SFP+-10G-SR
    Xcvr 8       REV 01   740-031980   123363A01139      SFP+-10G-SR
    Xcvr 9       REV 01   740-031980   AJJ01KE           SFP+-10G-SR
    Xcvr 10      REV 01   740-031980   123363A01336      SFP+-10G-SR
    Xcvr 11      REV 01   740-031980   B10M01325         SFP+-10G-SR
  PIC 1          REV 07   750-034624   EF6800            12x10GE (LAN/WAN) SFPP
    Xcvr 0       REV 01   740-031980   AJJ01SA           SFP+-10G-SR
    Xcvr 1       REV 01   740-031980   AJJ01QZ           SFP+-10G-SR
    Xcvr 2       REV 01   740-031980   AJH0217           SFP+-10G-SR
    Xcvr 3       REV 01   740-031980   AJJ01TE           SFP+-10G-SR
    Xcvr 4       REV 01   740-031980   AJJ01KV           SFP+-10G-SR
    Xcvr 5       REV 01   740-031980   AJJ01MU           SFP+-10G-SR
    Xcvr 6       REV 01   740-031980   AJJ01R0           SFP+-10G-SR
    Xcvr 7       REV 01   740-031980   AJJ01TC           SFP+-10G-SR
    Xcvr 8       REV 01   740-031980   AJJ0364           SFP+-10G-SR
    Xcvr 9       REV 01   740-031980   AJD0GV3           SFP+-10G-SR
    Xcvr 10      REV 01   740-031980   B10M03343         SFP+-10G-SR
    Xcvr 11      REV 01   740-031980   AJJ01QJ           SFP+-10G-SR
  LMB 0          REV 05   711-034381   EJ8490            Type-0 LMB
  LMB 1          REV 04   711-035774   EJ8517            Type-1 LMB
  LMB 2          REV 05   711-034381   EJ8489            Type-0 LMB
FPC 3            REV 07   750-032819   EG3637            FPC Type 5-3D
  CPU            REV 09   711-030686   EG0150            SNG PMB
  PIC 0          REV 08   750-035293   EF3657            1x100GE
    Xcvr 0       REV 01   740-032210   C22CQNJ           CFP-100G-LR4
  PIC 1          REV 10   750-034624   BBAN4098          12x10GE (LAN/WAN) SFPP
    Xcvr 0       REV 01   740-031980   B11J04902         SFP+-10G-SR
    Xcvr 1       REV 01   740-031980   B11J04891         SFP+-10G-SR
    Xcvr 2       REV 01   740-031980   AJJ01MX           SFP+-10G-SR
    Xcvr 3       REV 01   740-031980   B11J04183         SFP+-10G-SR
    Xcvr 4       REV 01   740-031980   B11J04894         SFP+-10G-SR
    Xcvr 5       REV 01   740-031980   B11J04184         SFP+-10G-SR
    Xcvr 6       REV 01   740-031980   B11J04897         SFP+-10G-SR
    Xcvr 7       REV 01   740-031980   B11J04899         SFP+-10G-SR
    Xcvr 8       REV 01   740-031980   AJJ01TV           SFP+-10G-SR
    Xcvr 9       REV 01   740-031980   B11J04057         SFP+-10G-SR
    Xcvr 10      REV 01   740-031980   AJJ01M4           SFP+-10G-SR
    Xcvr 11      REV 01   740-031980   B11J04905         SFP+-10G-SR
  LMB 0          REV 04   711-034381   EG1524            Type-0 LMB
  LMB 1          REV 03   711-035774   EG0345            Type-1 LMB
  LMB 2          REV 04   711-034381   EG1522            Type-0 LMB
FPC 5            REV 03   710-033871   BBAJ0768          FPC Type 4-ES
  CPU            REV 11   710-016744   BBAH9342          ST-PMB2
  PIC 0          REV 09   750-029262   EE6789            100GE
```

```
  PIC 1          REV 03   750-034781   EE6655           100GE CFP
    Xcvr 0       REV 01   740-032210   J11A22334        CFP-100G-LR4
  BRIDGE 0       REV 03   711-029995   EE6572           100GE Bridge Board
  MMB 0          REV 07   710-025563   BBAJ4657         ST-MMB2
  MMB 1          REV 07   710-025563   BBAJ3073         ST-MMB2
FPC 6            REV 05   750-010153   EF4936           FPC Type 5-3D
  CPU            REV 06   711-030686   EF4189           SNG PMB
  PIC 0          REV 10   750-034624   BBAN4109         12x10GE (LAN/WAN) SFPP
    Xcvr 0       REV 01   740-031980   B11J04895        SFP+-10G-SR
    Xcvr 1       REV 01   740-031980   B11J04898        SFP+-10G-SR
    Xcvr 2       REV 01   740-031980   B11J04021        SFP+-10G-SR
    Xcvr 3       REV 01   740-031980   B11J04903        SFP+-10G-SR
    Xcvr 4       REV 01   740-031980   B11J04311        SFP+-10G-SR
    Xcvr 5       REV 01   740-031980   B11J04059        SFP+-10G-SR
    Xcvr 6       REV 01   740-031980   B11J04016        SFP+-10G-SR
    Xcvr 7       REV 01   740-031980   B11J04017        SFP+-10G-SR
    Xcvr 8       REV 01   740-031980   B11J04887        SFP+-10G-SR
    Xcvr 9       REV 01   740-031980   B11J04297        SFP+-10G-SR
    Xcvr 10      REV 01   740-031980   B11J04893        SFP+-10G-SR
    Xcvr 11      REV 01   740-031980   B11J04022        SFP+-10G-SR
  PIC 1          REV 02   750-034624   EE3711           12x10GE (LAN/WAN) SFPP
    Xcvr 0       REV 01   740-031980   AJH033X          SFP+-10G-SR
    Xcvr 1       REV 01   740-031980   AJJ01N0          SFP+-10G-SR
    Xcvr 2       REV 01   740-031980   AJJ01SV          SFP+-10G-SR
    Xcvr 3       REV 01   740-031980   AJJ032L          SFP+-10G-SR
    Xcvr 4       REV 01   740-031980   B10M01593        SFP+-10G-SR
    Xcvr 5       REV 01   740-031980   AJD0FF1          SFP+-10G-SR
    Xcvr 6       REV 01   740-031980   AJJ01NU          SFP+-10G-SR
    Xcvr 7       REV 01   740-031980   123363A01305     SFP+-10G-SR
    Xcvr 8       REV 01   740-031980   B10M00361        SFP+-10G-SR
    Xcvr 9       REV 01   740-031980   AJJ01M7          SFP+-10G-SR
    Xcvr 10      REV 01   740-031980   AJJ032X          SFP+-10G-SR
    Xcvr 11      REV 01   740-031980   AJJ01PG          SFP+-10G-SR
  LMB 0          REV 04   711-034381   EF3838           Type-0 LMB
  LMB 1          REV 03   711-035774   EF3821           Type-1 LMB
  LMB 2          REV 04   711-034381   EF3834           Type-0 LMB
SPMB 0           REV 05   710-023321   ED1990           LCC Switch CPU
SPMB 1           REV 05   710-023321   EA2768           LCC Switch CPU
SIB 0            REV 02   711-036340   EF8802           SIB-HC-3D
SIB 1            REV 07   711-036340   EG2286           SIB-HC-3D
SIB 2            REV 07   711-036340   EG2252           SIB-HC-3D
SIB 3            REV 02   711-036340   EF1358           SIB-HC-3D
SIB 4            REV 02   711-036340   EF8806           SIB-HC-3D
Fan Tray 0                                              Front Top Fan Tray
Fan Tray 1                                              Front Bottom Fan Tray
-- Rev 2
Fan Tray 2                                              Rear Fan Tray -- Rev 3
```

show chassis hardware models (T4000 Router)

```
user@host> show chassis hardware models

Hardware inventory:
Item             Version  Part number  Serial number     FRU model number
Midplane         REV 01   710-027486   RC8355            CHAS-BP-T1600-S
FPM Display      REV 01   710-021387   EF6764            CRAFT-T1600-S
CIP              REV 06   710-002895   BBAD9210          CIP-L-T640-S
PEM 0            REV 01   740-036442   VA00016           PWR-T-6-60-DC
SCG 0            REV 18   710-003423   BBAD7248          SCG-T-S
SCG 1            REV 18   710-003423   BBAE3874          SCG-T-S
Routing Engine 0 REV 05   740-026941   P737F-002248      RE-DUO-C1800-8G-S
```

```
Routing Engine 1 REV 06   740-026941   P737F-002653      RE-DUO-C1800-8G-S
CB 0             REV 09   710-022597   ED0295            CB-LCC-S
CB 1             REV 09   710-022597   EA6050            CB-LCC-S
FPC 3
  PIC 0          REV 08   750-035293   EF3657            PF-1CGE-CFP
  PIC 1          REV 10   750-034624   BBAN4098          PF-12XGE-SFPP
FPC 5            REV 03   710-033871   BBAJ0768          T1600-FPC4-ES
  PIC 1          REV 03   750-034781   EE6655            PD-1CE-CFP-FPC4
FPC 6
  PIC 0          REV 10   750-034624   BBAN4109          PF-12XGE-SFPP
Fan Tray 0                                               FANTRAY-T-S
Fan Tray 1                                               FANTRAY-T4000-S
Fan Tray 2                                               FAN-REAR-TXP-LCC
```

show chassis hardware lcc (TX Matrix Router)

```
user@host> show chassis hardware lcc 0
lcc0-re0:
--------------------------------------------------------------------------
Hardware inventory:
Item             Version  Part number  Serial number     Description
Chassis                                65751             T640
Midplane         REV 03   710-005608   RA1408            T640 Backplane
FPM GBUS         REV 09   710-002901   RA2784            T640 FPM Board
FPM Display      REV 05   710-002897   RA2825            FPM Display
CIP              REV 06   710-002895   HT0684            T Series CIP
PEM 0            Rev 11   740-002595   PM18483           Power Entry Module
PEM 1            Rev 11   740-002595   qb13984           Power Entry Module
SCG 0            REV 11   710-003423   HT0022            T640 Sonet Clock Gen.
Routing Engine 0 REV 13   740-005022   210865700363      RE-3.0 (RE-600)
CB 0             REV 03   710-007655   HW1195            Control Board (CB-T)
FPC 1            REV 05   710-007527   HM3245            FPC Type 2
  CPU            REV 14   710-001726   HM1084            FPC CPU
  PIC 0          REV 02   750-007218   AZ1112            2x OC-12 ATM2 IQ, SMIR
  PIC 1          REV 02   750-007745   HG3462            4x OC-3 SONET, SMIR
  PIC 2          REV 14   750-001901   BA5390            4x OC-12 SONET, SMIR
  PIC 3          REV 09   750-008155   HS3012            2x G/E IQ, 1000 BASE
    SFP 0                 NON-JNPR     P1186TY           SFP-S
    SFP 1        REV 01   740-007326   P11WLTF           SFP-SX
  MMB 1          REV 02   710-005555   HL7514            MMB-288mbit
  PPB 0          REV 04   710-003758   HM4405            PPB Type 2
  PPB 1          REV 04   710-003758   AV1960            PPB Type 2
FPC 2            REV 08   710-010154   HZ3578            E-FPC Type 3
  CPU            REV 05   710-010169   HZ3219            FPC CPU-Enhanced
  PIC 0          REV 02   750-009567   HX2882            1x 10GE(LAN),XENPAK
    SFP 0        REV 01   740-009898   USC202U709        XENPAK-LR
  PIC 1          REV 03   750-003336   HJ9954            4x OC-48 SONET, SMSR
  PIC 2          REV 01   750-004535   HC0235            1x OC-192 SM SR1
  PIC 3          REV 07   750-007141   HX1699            10x 1GE(LAN), 1000 BASE

    SFP 0        REV 01   740-007326   2441042           SFP-SX
    SFP 1        REV 01   740-007326   2441027           SFP-SX
  MMB 0          REV 03   710-010171   HV2365            MMB-5M3-288mbit
  MMB 1          REV 03   710-010171   HZ3888            MMB-5M3-288mbit
SPMB 0           REV 09   710-003229   HW5245            T Series Switch CPU
SIB 3            REV 07   710-005781   HR5927            SIB-L8-F16
  B Board        REV 06   710-005782   HR5971            SIB-L8-F16 (B)
SIB 4            REV 07   710-005781   HR5903            SIB-L8-F16
  B Board        REV 06   710-005782   HZ5275            SIB-L8-F16 (B)
```

show chassis hardware scc (TX Matrix Router)

```
user@host> show chassis hardware scc
scc-re0:
--------------------------------------------------------------------------
Hardware inventory:
Item             Version  Part number  Serial number     Description
Chassis                                                  TX Matrix
Midplane         REV 04   710-004396   RB0014            SCC Midplane
FPM GBUS         REV 04   710-004617   HW9141            SCC FPM Board
FPM Display      REV 04   710-004619   HS5950            SCC FPM
CIP 0            REV 01   710-010218   HV9151            SCC CIP
CIP 1            REV 01   710-010218   HV9152            SCC CIP
PEM 1            Rev 11   740-002595   QB13977           Power Entry Module
Routing Engine 0 REV 05   740-008883   P11123900153      RE-4.0 (RE-1600)
CB 0             REV 01   710-011709   HR5964            Control Board (CB-TX)
SPMB 0           REV 09   710-003229   HW5293            T Series Switch CPU
SIB 3
SIB 4            REV 01   710-005839   HW1177            SIB-S8-F16
  B Board        REV 01   710-005840   HW1202            SIB-S8-F16 (B)
```

show chassis hardware (T1600 Router)

```
user@host> show chassis hardware
Hardware inventory:
Item             Version  Part number  Serial number     Description
Chassis                                B2703             T1600
Midplane         REV 03   710-005608   RC4137            T640 Backplane
FPM GBUS         REV 10   710-002901   DT7062            T640 FPM Board
FPM Display      REV 05   710-002897   DS3067            FPM Display
CIP              REV 06   710-002895   DT3386            T-series CIP
PEM 0            Rev 07   740-017906   UA26344           Power Entry Module 3x80
PEM 1            Rev 18   740-002595   UF38441           Power Entry Module
SCG 0            REV 15   710-003423   DV0941            T640 Sonet Clock Gen.
Routing Engine 0 REV 08   740-014082   9009014502        RE-A-2000
Routing Engine 1 REV 07   740-014082   9009009591        RE-A-2000
CB 0             REV 05   710-007655   JA9360            Control Board (CB-T)
CB 1             REV 03   710-017707   DT3251            Control Board (CB-T)
FPC 0            REV 07   710-013558   DR4253            E2-FPC Type 2
  CPU            REV 05   710-013563   DS3902            FPC CPU-Enhanced
  PIC 0          REV 01   750-010618   CB5446            4x G/E SFP, 1000 BASE
    Xcvr 0       REV 01   740-011613   P9F11CW           SFP-SX
    Xcvr 1       REV 01   740-011613   P9F15C2           SFP-SX
    Xcvr 2       REV 01   740-011782   PB94K0L           SFP-SX
  PIC 1          REV 06   750-001900   HB6399            1x OC-48 SONET, SMSR
  PIC 2          REV 14   750-001901   AP1092            4x OC-12 SONET, SMIR
  PIC 3          REV 07   750-001900   AR8275            1x OC-48 SONET, SMSR
  MMB 1          REV 07   710-010171   DS1524            MMB-5M3-288mbit
FPC 1            REV 06   710-013553   DL9067            E2-FPC Type 1
  CPU            REV 04   710-013563   DM1685            FPC CPU-Enhanced
  PIC 0          REV 08   750-001072   AB1688            1x G/E, 1000 BASE-SX
  PIC 1          REV 10   750-012266   JX5519            4x 1GE(LAN), IQ2
    Xcvr 0       REV 01   740-011613   AM0812S8UK6       SFP-SX
    Xcvr 2       REV 01   740-011613   AM0812S8UK1       SFP-SX
    Xcvr 3       REV 01   740-011782   P8N1YHG           SFP-SX
  PIC 2          REV 22   750-005634   DP0083            1x CHOC12 IQ SONET, SMIR

  MMB 1          REV 07   710-008923   DN1862            MMB 3M 288-bit
FPC 2            REV 01   710-005548   HJ9899            FPC Type 3
  CPU            REV 06   710-001726   HC0586            FPC CPU
```

```
  PIC 0          REV 16   750-007141   NC9660            10x 1GE(LAN), 1000 BASE

    Xcvr 0       REV 01   740-011613   AM0812S8XAR       SFP-SX
    Xcvr 1       REV 01   740-011782   P920E7B           SFP-SX
    Xcvr 2       REV 01   740-011613   AM0812S8XAU       SFP-SX
    Xcvr 4       REV 01   740-011613   AM0812S8XAK       SFP-SX
    Xcvr 5       REV 01   740-011613   AM0812S8XAA       SFP-SX
    Xcvr 6       REV 01   740-011613   PAJ4NKY           SFP-SX
    Xcvr 7       REV 01   740-011613   AM0812S8UJW       SFP-SX
    Xcvr 8       REV 01   740-011782   PB81X89           SFP-SX
    Xcvr 9       REV 01   740-011613   AM0812S8UJX       SFP-SX
  PIC 1          REV 06   750-015217   DK3280            8x 1GE(TYPE3), IQ2
    Xcvr 0       REV 01   740-011782   P8P0A3T           SFP-SX
    Xcvr 1       REV 01   740-013111   5090002           SFP-T
    Xcvr 2       REV 01   740-011613   AM0814S93BQ       SFP-SX
    Xcvr 4                NON-JNPR     PDE0FAN           SFP-SX
    Xcvr 5       REV 01   740-011782   P8Q20XY           SFP-SX
    Xcvr 6       REV 01   740-011613   AM0812S8UJV       SFP-SX
    Xcvr 7       REV 01   740-011613   AM0812S8UP7       SFP-SX
  PIC 2          REV 05   750-004695   HT4383            1x Tunnel
  PIC 3          REV 17   750-009553   RL0204            4x OC-48 SONET
    Xcvr 0       REV 01   740-011785   PDS3T23           SFP-SR
    Xcvr 1       REV 01   740-011785   P6Q0F3E           SFP-SR
  MMB 0          REV 03   710-004047   HD5843            MMB-288mbit
  MMB 1          REV 03   710-004047   HE3208            MMB-288mbit
  PPB 0          REV 02   710-002845   HA4524            PPB Type 3
  PPB 1          REV 02   710-002845   HA4766            PPB Type 3
FPC 3            REV 01   710-010154   HR0863            E-FPC Type 3
  CPU            REV 01   710-010169   HN3422            FPC CPU-Enhanced
  PIC 0          REV 07   750-012793   WF5096            1x 10GE(LAN/WAN) IQ2
    Xcvr 0                NON-JNPR     M64294TP          XFP-10G-LR
  PIC 1          REV 25   750-007141   DV2127            10x 1GE(LAN), 1000 BASE

    Xcvr 0       REV 01   740-011613   PFA6LTJ           SFP-SX
    Xcvr 1       REV 01   740-011782   P9P0XV4           SFP-SX
    Xcvr 2       REV 01   740-011782   P9M0TNX           SFP-SX
    Xcvr 4       REV 01   740-011782   P9B0TTP           SFP-SX
    Xcvr 5                NON-JNPR     PBS4LED           SFP-SX
  PIC 2          REV 17   750-009553   RL0212            4x OC-48 SONET
    Xcvr 0       REV 01   740-011785   PDS3T8G           SFP-SR
  PIC 3          REV 32   750-003700   DL1279            1x OC-192 12xMM VSR
  MMB 0          REV 01   710-010171   HR0821            MMB-288mbit
  MMB 1          REV 01   710-010171   HR0818            MMB-288mbit
FPC 4            REV 16   710-013037   EB4919            FPC Type 4-ES
  CPU            REV 09   710-016744   BBAA4382          ST-PMB2
  PIC 0          REV 03   711-029996   EB1569            100GE
  PIC 1          REV 05   711-029999   EB9983            100GE CFP
    Xcvr 0       REV 0    740-032210   J10G80746         CFP-100G-LR4
  BRIDGE 0       REV 02   711-029995   EB2235            100GE Bridge Board
  MMB 0          REV 04   710-025563   BBAA7112          ST-MMB2
  MMB 1          REV 04   710-025563   BBAA7149          ST-MMB2
FPC 5            REV 02   710-013037   DE3407            FPC Type 4-ES
  CPU            REV 04   710-016744   DA2124            ST-PMB2
  PIC 0          REV 16   750-012518   DF2554            4x OC-192 SONET XFP
    Xcvr 0       REV 01   740-014279   AA0745N1FX8       XFP-OC192-SR
    Xcvr 1       REV 01   740-014279   AA0748N1HN5       XFP-OC192-SR
    Xcvr 2       REV 01   740-014279   AA0748N1HT6       XFP-OC192-SR
    Xcvr 3       REV 01   740-014279   AA0744N1EC9       XFP-OC192-SR
  PIC 1          REV 01   750-010850   JA0329            1x OC-768 SONET SR
  MMB 0          REV 04   710-016036   DE9577            ST-MMB2
  MMB 1          REV 04   710-016036   DK4060            ST-MMB2
```

```
FPC 6            REV 14   710-013037   DV1431            FPC Type 4-ES
  CPU            REV 09   710-016744   DT9020            ST-PMB2
  PIC 0          REV 11   750-017405   DM6261            4x 10GE (LAN/WAN) XFP
    Xcvr 0       REV 01   740-014289   C701XU05Q         XFP-10G-SR
    Xcvr 1       REV 01   740-014279   AA0748N1HPT       XFP-10G-LR
    Xcvr 2       REV 01   740-014289   T08E19189         XFP-10G-SR
    Xcvr 3       REV 01   740-014289   C715XU058         XFP-10G-SR
  PIC 1          REV 13   750-017405   DP8772            4x 10GE (LAN/WAN) XFP
    Xcvr 0       REV 02   740-011571   C850XJ037         XFP-10G-SR
    Xcvr 1       REV 02   740-014289   C839XU0L9         XFP-10G-SR
    Xcvr 2       REV 02   740-014289   C834XU05A         XFP-10G-SR
    Xcvr 3       REV 02   740-014289   C810XU0CE         XFP-10G-SR
  MMB 0          REV 01   710-025563   DT8454            ST-MMB2
  MMB 1          REV 01   710-025563   DT8366            ST-MMB2
FPC 7            REV 09   710-007529   HZ7624            FPC Type 3
  CPU            REV 15   710-001726   HZ1413            FPC CPU
  PIC 0          REV 10   750-012793   DM5627            1x 10GE(LAN/WAN) IQ2
    Xcvr 0       REV 02   740-011571   C831XJ062         XFP-10G-SR
  PIC 1          REV 01   750-015217   JT6762            8x 1GE(TYPE3), IQ2
    Xcvr 0       REV 01   740-011782   P8Q25JU           SFP-SX
    Xcvr 1       REV 01   740-011782   P9B0U0K           SFP-SX
  PIC 2          REV 01   750-015217   JS4268            8x 1GE(TYPE3), IQ2
    Xcvr 0       REV 01   740-011613   AM0812S8XBZ       SFP-SX
    Xcvr 1       REV 01   740-011613   AM0812S8XAP       SFP-SX
    Xcvr 2       REV 01   740-011613   AM0812S8XBY       SFP-SX
    Xcvr 3       REV 01   740-011613   AM0812S8XBX       SFP-SX
    Xcvr 4       REV 01   740-011613   P9F1652           SFP-SX
    Xcvr 5       REV 01   740-011782   P8Q21YC           SFP-SX
    Xcvr 6       REV 01   740-011782   P8Q27HQ           SFP-SX
    Xcvr 7       REV 01   740-011613   P8E2SSU           SFP-SX
  PIC 3          REV 15   750-009450   NB6790            1x OC-192 SM SR2
  MMB 0          REV 03   710-005555   HZ3450            MMB-288mbit
  MMB 1          REV 03   710-005555   HZ3415            MMB-288mbit
  PPB 0          REV 04   710-002845   HP0887            PPB Type 3
  PPB 1          REV 04   710-002845   HW5255            PPB Type 3
SPMB 0           REV 10   710-003229   HX3699            T-series Switch CPU
SPMB 1           REV 12   710-003229   DT3091            T-series Switch CPU
SIB 0            REV 07   710-013074   DS4747            SIB-I8-SF
SIB 1            REV 07   710-013074   DS4942            SIB-I8-SF
SIB 2            REV 07   710-013074   DS4965            SIB-I8-SF
SIB 3            REV 07   710-013074   DS4990            SIB-I8-SF
SIB 4            REV 07   710-013074   DS4944            SIB-I8-SF
Fan Tray 0                                               Front Top Fan Tray
Fan Tray 1                                               Front Bottom Fan Tray
Fan Tray 2                                               Rear Fan Tray -- Rev 2
```

show chassis hardware (TX Matrix Plus Router)

```
user@host> show chassis hardware
sfc0-re0:
--------------------------------------------------------------------------
Hardware inventory:
Item             Version  Part number  Serial number     Description
Chassis                                JN113186EAHB      TXP
Midplane         REV 05   710-022574   TS3822            SFC Midplane
FPM Display      REV 03   710-024027   DW4701            TXP FPM Display
CIP 0            REV 05   710-023792   DW7998            TXP CIP
CIP 1            REV 05   710-023792   DW7999            TXP CIP
PEM 0            Rev 04   740-027463   UM26367           Power Entry Module
PEM 1            Rev 04   740-027463   UM26346           Power Entry Module
Routing Engine 0 REV 06   740-026942   737A-1081         RE-DUO-2600
```

```
Routing Engine 1 REV 06   740-026942   737A-1043         RE-DUO-2600
CB 0             REV 05   710-022606   DW4435            SFC Control Board
CB 1             REV 09   710-022606   DW6100            SFC Control Board
SPMB 0                    BUILTIN                        SFC Switch CPU
SPMB 1                    BUILTIN                        SFC Switch CPU
SIB F13 0        REV 04   750-024564   DW5764            F13 SIB
  B Board        REV 03   710-023431   DW9053            F13 SIB Mezz
SIB F13 3        REV 04   750-024564   DW5785            F13 SIB
  B Board        REV 03   710-023431   DW9030            F13 SIB Mezz
SIB F13 6
SIB F13 8        REV 04   750-024564   DW5752            F13 SIB
  B Board        REV 03   710-023431   DW9051            F13 SIB Mezz
SIB F13 11       REV 04   750-024564   DW5782            F13 SIB
  B Board        REV 03   710-023431   DW9058            F13 SIB Mezz
SIB F13 12       REV 03   750-024564   DT9466            F13 SIB
  B Board        REV 02   710-023431   DT6556            F13 SIB Mezz
SIB F2S 0/0      REV 05   710-022603   DW7898            F2S SIB
  B Board        REV 05   710-023787   DW7625            F2S SIB Mezz
SIB F2S 0/2      REV 05   710-022603   DW7811            F2S SIB
  B Board        REV 05   710-023787   DW7550            F2S SIB Mezz
SIB F2S 0/4      REV 04   710-022603   DW4873            F2S SIB
  B Board        REV 05   710-023787   DW8509            F2S SIB Mezz
SIB F2S 0/6      REV 04   710-022603   DW4867            F2S SIB
  B Board        REV 05   710-023787   DW8472            F2S SIB Mezz
SIB F2S 1/0      REV 04   710-022603   DW4871            F2S SIB
  B Board        REV 05   710-023787   DW8497            F2S SIB Mezz
SIB F2S 1/2      REV 05   710-022603   DW7868            F2S SIB
  B Board        REV 05   710-023787   DW7551            F2S SIB Mezz
SIB F2S 1/4      REV 04   710-022603   DW4854            F2S SIB
  B Board        REV 05   710-023787   DW8496            F2S SIB Mezz
SIB F2S 1/6      REV 05   710-022603   DW7889            F2S SIB
  B Board        REV 05   710-023787   DW7496            F2S SIB Mezz
SIB F2S 2/0      REV 04   710-022603   DW4852            F2S SIB
  B Board        REV 05   710-023787   DW8498            F2S SIB Mezz
SIB F2S 2/2      REV 04   710-022603   DW4845            F2S SIB
  B Board        REV 05   710-023787   DW8457            F2S SIB Mezz
SIB F2S 2/4      REV 05   710-022603   DW7802            F2S SIB
  B Board        REV 05   710-023787   DW7562            F2S SIB Mezz
SIB F2S 2/6      REV 04   710-022603   DW4822            F2S SIB
  B Board        REV 05   710-023787   DW8467            F2S SIB Mezz
SIB F2S 3/0      REV 05   710-022603   DW7815            F2S SIB
  B Board        REV 05   710-023787   DW7518            F2S SIB Mezz
SIB F2S 3/2      REV 03   710-022603   DV0068            F2S SIB
  B Board        REV 03   710-023787   DT9974            F2S SIB Mezz
SIB F2S 3/4      REV 05   710-022603   DW7874            F2S SIB
  B Board        REV 05   710-023787   DW7601            F2S SIB Mezz
SIB F2S 3/6      REV 03   710-022603   DV0033            F2S SIB
  B Board        REV 03   710-023787   DT9969            F2S SIB Mezz
SIB F2S 4/0      REV 03   710-022603   DV0043            F2S SIB
  B Board        REV 03   710-023787   DT9948            F2S SIB Mezz
SIB F2S 4/2      REV 05   710-022603   DW5446            F2S SIB
  B Board        REV 05   710-023787   DW7611            F2S SIB Mezz
SIB F2S 4/4      REV 04   710-022603   DW4826            F2S SIB
  B Board        REV 05   710-023787   DW8458            F2S SIB Mezz
SIB F2S 4/6      REV 03   710-022603   DV0026            F2S SIB
  B Board        REV 03   710-023787   DT9963            F2S SIB Mezz
Fan Tray 0       REV 02   760-024497   DR8290            Front Fan Tray
Fan Tray 1       REV 02   760-024497   DR8293            Front Fan Tray
Fan Tray 2       REV 05   760-024502   DR8280            Rear Fan Tray
Fan Tray 3
Fan Tray 4       REV 05   760-024502   DR8276            Rear Fan Tray
```

```
Fan Tray 5       REV 02   760-024502   DP5643            Rear Fan Tray

lcc0-re0:
--------------------------------------------------------------------------
Hardware inventory:
Item             Version  Part number  Serial number     Description
Chassis                                JN11036F8AHA      T1600
Midplane         REV 03   710-017247   RC3799            T-series Backplane
FPM GBUS         REV 10   710-002901   DP7009            T640 FPM Board
FPM Display      REV 01   710-021387   DN7026            T1600 FPM Display
CIP              REV 06   710-002895   DP6024            T-series CIP
PEM 1           Rev 02   740-023211   WA50019           Power Entry Module 4x60A
SCG 0            REV 15   710-003423   DR6757            T640 Sonet Clock Gen.
SCG 1            REV 15   710-003423   DS2225            T640 Sonet Clock Gen.
Routing Engine 0 REV 01   740-026941   737F-1040         RE-DUO-1800
Routing Engine 1 REV 01   740-026941   737F-1016         RE-DUO-1800
CB 0             REV 06   710-022597   DX4011            LCC Control Board
CB 1             REV 06   710-022597   DX4017            LCC Control Board
FPC 1            REV 07   710-013035   DN5847            FPC Type 3-ES
  CPU            REV 08   710-016744   DP2570            ST-PMB2
  PIC 0          REV 05   750-015217   DB0418            8x 1GE(TYPE3), IQ2
    Xcvr 0       REV 01   740-011782   P8Q27ZG           SFP-SX
    Xcvr 1                NON-JNPR     PDA1U0D           SFP-SX
    Xcvr 2       REV 01   740-011613   P9F1ALW           SFP-SX
    Xcvr 3       REV 01   740-011782   PBA403V           SFP-SX
    Xcvr 4                NON-JNPR     PDE09DP           SFP-SX
    Xcvr 5       REV 01   740-011782   PCH2P4K           SFP-SX
    Xcvr 6       REV 01   740-011782   PB94K0F           SFP-SX
    Xcvr 7       REV 01   740-011782   PBA2R2A           SFP-SX
  PIC 1          REV 03   750-004424   HJ4020            1x 10GE(LAN),DWDM
  PIC 2          REV 01   750-003336   HG6073            4x OC-48 SONET, SMSR
  MMB 0          REV 04   710-016036   DP3401            ST-MMB2
FPC 3            REV 12   710-013037   DR1169            FPC Type 4-ES
  CPU            REV 08   710-016744   DP9429            ST-PMB2
  PIC 0          REV 02   750-010850   JA0332            1x OC-768 SONET SR
  MMB 0          REV 04   710-016036   DR0628            ST-MMB2
  MMB 1          REV 04   710-016036   DR0592            ST-MMB2
FPC 4            REV 05   710-021534   DR7350            FPC Type 1-ES
  CPU            REV 08   710-016744   DP8096            ST-PMB2
  PIC 0          REV 04   750-014627   DP9171            4x OC-3 1x OC-12 SFP
    Xcvr 0       REV 02   740-011615   PDE2RVR           SFP-SR
  PIC 1         REV 22   750-005634   DS5815           1x CHOC12 IQ SONET, SMIR

  PIC 2          REV 09   750-002911   CF4539            4x F/E, 100 BASE-TX
  PIC 3          REV 08   750-021652   DR2827            1x CHOC12 IQE SONET
    Xcvr 0                NON-JNPR     8                 UNKNOWN
  MMB 0          REV 04   710-016036   DR0809            ST-MMB2
FPC 5            REV 07   710-007529   HS5608            FPC Type 3
  CPU            REV 15   710-001726   HX4351            FPC CPU
  PIC 0          REV 14   750-009567   WJ8961            1x 10GE(LAN),XENPAK
    Xcvr 0       REV 01   740-013170   J05K05961         XENPAK-LR
  PIC 1         REV 16   750-007141   JJ8146           10x 1GE(LAN), 1000 BASE

    Xcvr 1       REV 01   740-011613   P9F117T           SFP-SX
    Xcvr 2       REV 01   740-011782   PBA2VCL           SFP-SX
    Xcvr 3       REV 01   740-011782   PB83DRB           SFP-SX
    Xcvr 4       REV 01   740-011613   AM0812S8UP8       SFP-SX
  PIC 2          REV 12   750-009567   WF3566            1x 10GE(LAN),XENPAK
    Xcvr 0       REV 02   740-013170   T07C94489         XENPAK-LR
  MMB 0          REV 03   710-005555   HZ1907            MMB-288mbit
  MMB 1          REV 03   710-005555   HW5283            MMB-288mbit
```

```
  PPB 0          REV 04   710-002845   HZ7717            PPB Type 3
  PPB 1          REV 04   710-002845   HS0110            PPB Type 3
FPC 6            REV 07   710-013035   DP7486            FPC Type 3-ES
  CPU            REV 08   710-016744   DP2545            ST-PMB2
  PIC 0          REV 09   750-009567   NE6323            1x 10GE(LAN),XENPAK
    Xcvr 0       REV 02   740-013170   T09C71959         XENPAK-LR
  PIC 1          REV 06   750-015217   DN4775            8x 1GE(TYPE3), IQ2
    Xcvr 0       REV 01   740-011782   P7E0T6M           SFP-SX
    Xcvr 1       REV 01   740-011613   AM0812S8XAY       SFP-SX
    Xcvr 2       REV 01   740-011782   P7E0T6J           SFP-SX
    Xcvr 3       REV 01   740-011782   PCH2P7D           SFP-SX
    Xcvr 4       REV 01   740-011782   P9B0QYT           SFP-SX
    Xcvr 5       REV 01   740-011613   AM0812S8WQJ       SFP-SX
    Xcvr 6       REV 02   740-013111   9301220           SFP-T
    Xcvr 7       REV 01   740-011782   P9B0TZ5           SFP-SX
  PIC 2          REV 06   750-015217   DM6747            8x 1GE(TYPE3), IQ2
    Xcvr 0       REV 01   740-011613   PAP0ZB2           SFP-SX
    Xcvr 1       REV 01   740-013111   70191002          SFP-T
    Xcvr 6       REV 01   740-011782   PBA29H8           SFP-SX
    Xcvr 7       REV 01   740-011613   AM0812S8WQG       SFP-SX
  MMB 0          REV 04   710-016036   DP3238            ST-MMB2
FPC 7            REV 03   710-021540   DV3154            FPC Type 2-ES
  CPU            REV 09   710-016744   DT9053            ST-PMB2
  PIC 0          REV 13   750-001901   HB4225            4x OC-12 SONET, SMIR
  PIC 1          REV 05   750-001900   AD3644            1x OC-48 SONET, SMSR
  PIC 2          REV 10   750-008155   HV0335            2x G/E IQ, 1000 BASE
    Xcvr 0       REV 01   740-011782   PCH2UKF           SFP-SX
    Xcvr 1       REV 01   740-011782   PCH2V19           SFP-SX
  PIC 3          REV 03   750-014638   JS9493            1x OC-48-12-3 SFP
    Xcvr 0       REV 01   740-011785   P6Q0ENK           SFP-SR
  MMB 0          REV 05   710-016036   DP3323            ST-MMB2
SPMB 0           REV 04   710-023321   DX3004            LCC Switch CPU
SPMB 1           REV 04   710-023321   DX3009            LCC Switch CPU
SIB 0            REV 07   710-022594   DW4195            LCC SIB
  B Board        REV 07   710-023185   DW3930            LCC SIB Mezz
SIB 1            REV 07   710-022594   DW4179            LCC SIB
  B Board        REV 07   710-023185   DW3919            LCC SIB Mezz
SIB 2
SIB 3            REV 06   710-022594   DT8251            LCC SIB
  B Board        REV 06   710-023185   DT5792            LCC SIB Mezz
SIB 4            REV 08   710-022594   DW8014            LCC SIB
  B Board        REV 07   710-023185   DW3917            LCC SIB Mezz
Fan Tray 0                                               Front Top Fan Tray
Fan Tray 1                                               Front Bottom Fan Tray
Fan Tray 2                                               Rear Fan Tray -- Rev 3

lcc1-re0:
--------------------------------------------------------------------------
Hardware inventory:
Item             Version  Part number  Serial number     Description
Chassis                                JN1102270AHA      T1600
Midplane         REV 04   710-017247   RC5358            T-series Backplane
FPM GBUS         REV 10   710-002901   DS3443            T640 FPM Board
FPM Display      REV 01   710-021387   DS6411            T1600 FPM Display
CIP              REV 06   710-002895   DS4235            T-series CIP
PEM 0           Rev 02   740-023211   VM82438           Power Entry Module 4x60A
SCG 0            REV 15   710-003423   DS6649            T640 Sonet Clock Gen.
SCG 1            REV 15   710-003423   DR6775            T640 Sonet Clock Gen.
Routing Engine 0 REV 01   740-026941   737F-1083         RE-DUO-1800
Routing Engine 1 REV 01   740-026941   737F-1104         RE-DUO-1800
CB 0             REV 06   710-022597   DW8542            LCC Control Board
```

```
CB 1            REV 06   710-022597   DW8530           LCC Control Board
FPC 0           REV 02   710-010845   JE2392           FPC Type 4
  CPU           REV 02   710-011481   JF6820           FPC CPU-Enhanced
  PIC 0         REV 11   750-017405   DP7259           4x 10GE (LAN/WAN) XFP
    Xcvr 0      REV 01   740-014279   AA0741N1C8T      XFP-10G-LR
    Xcvr 1      REV 01   740-014279   AA0746N1GAM      XFP-10G-LR
    Xcvr 2      REV 01   740-014279   AA0747N1H0B      XFP-10G-LR
    Xcvr 3      REV 01   740-014279   AA0748N1HZ5      XFP-10G-LR
  MMB 0         REV 03   710-010842   HY7601           ST-MMB
FPC 1           REV 16   710-013037   BBAA7398         FPC Type 4-ES
  CPU           REV 09   710-016744   BBAA2329         ST-PMB2
  PIC 0         REV 03   711-029996   EB1575           100GE
  PIC 1         REV 06   750-034781   EB9980           100GE CFP
  MMB 0         REV 04   710-025563   BBAA5325         ST-MMB2
  MMB 1         REV 04   710-025563   BBAA5444         ST-MMB2
FPC 2           REV 16   710-013037   BBAA7185         FPC Type 4-ES
  CPU           REV 09   710-016744   BBAA3522         ST-PMB2
  PIC 0         REV 03   711-029996   EB1557           100GE
  PIC 1         REV 05   750-034781   EB4660           100GE CFP
    Xcvr 0      REV 0    740-032210   J10F73666        CFP-100G-LR4
  BRIDGE 0      REV 02   711-029995   EB2237           100GE Bridge Board
  MMB 0         REV 04   710-025563   BBAA5347         ST-MMB2
  MMB 1         REV 04   710-025563   BBAA5401         ST-MMB2
FPC 3           REV 10   710-021534   DZ0941           FPC Type 1-ES
  CPU           REV 09   710-016744   DY6364           ST-PMB2
  PIC 0         REV 13   750-012266   DK9192           4x 1GE(LAN), IQ2
    Xcvr 0      REV 01   740-011613   AM0812S8WVD      SFP-SX
    Xcvr 1               NON-JNPR     PDD63Q4          SFP-SX
    Xcvr 2               NON-JNPR     PDE4G54          SFP-SX
    Xcvr 3               NON-JNPR     PD40MAG          SFP-SX
  PIC 1         REV 01   750-007641   HJ2003           1x G/E IQ, 1000 BASE
    Xcvr 0      REV 01   740-011613   AM0812S8WVG      SFP-SX
  PIC 3         REV 17   750-007444   JB6873           1x CHSTM1 IQ SDH, SMIR
  MMB 0         REV 04   710-025563   DZ0281           ST-MMB2
FPC 4           REV 06   710-013035   DK0614           FPC Type 3-ES
  CPU           REV 07   710-016744   DK1616           ST-PMB2
  PIC 0         REV 22   750-007141   DM1870           10x 1GE(LAN), 1000 BASE

    Xcvr 0      REV 01   740-011782   PCL3UKW          SFP-SX
    Xcvr 1      REV 01   740-011782   P7E0T73          SFP-SX
    Xcvr 2      REV 01   740-007326   P4T0WLR          SFP-SX
    Xcvr 3      REV 01   740-011782   PAR1LRL          SFP-SX
    Xcvr 4      REV 01   740-011782   P9M0U3Z          SFP-SX
    Xcvr 5      REV 01   740-011782   P9M0U0C          SFP-SX
    Xcvr 6      REV 01   740-011782   P9M0TLG          SFP-SX
    Xcvr 7      REV 01   740-011782   P9M0U0F          SFP-SX
    Xcvr 8      REV 01   740-011613   PFA6LAP          SFP-SX
    Xcvr 9      REV 01   740-011782   PCH2P0U          SFP-SX
  PIC 1         REV 16   750-009450   CV2565           1x OC-192 SM SR2
  PIC 2         REV 05   750-004424   HH3057           1x 10GE(LAN),10GBASE-LR

  PIC 3         REV 12   750-013423   DP0403           MultiServices 500
  MMB 0         REV 04   710-016036   DK1988           ST-MMB2
FPC 5           REV 07   710-013560   DR0004           E2-FPC Type 3
  CPU           REV 05   710-013563   DR0089           FPC CPU-Enhanced
  PIC 0         REV 11   750-012793   DR6107           1x 10GE(LAN/WAN) IQ2
    Xcvr 0      REV 01   740-014289   C743XU074        XFP-10G-SR
  PIC 1         REV 01   750-004695   HD5980           1x Tunnel
  PIC 2         REV 32   750-003700   DL3770           1x OC-192 12xMM VSR
  PIC 3         REV 12   750-009553   WB8901           4x OC-48 SONET
    Xcvr 0      REV 01   740-011785   P9D1GTQ          SFP-SR
```

```
    Xcvr 1       REV 01   740-011785   PDS0MMB           SFP-SR
    Xcvr 3       REV 01   740-011785   PDE1KXP           SFP-SR
  MMB 0          REV 07   710-010171   DP7374            MMB-5M3-288mbit
  MMB 1          REV 07   710-010171   DP7404            MMB-5M3-288mbit
FPC 6            REV 07   710-013035   DM0994            FPC Type 3-ES
  CPU            REV 07   710-016744   DM3651            ST-PMB2
  PIC 0          REV 07   750-015217   DN4743            8x 1GE(TYPE3), IQ2
    Xcvr 3       REV 01   740-011613   AM0812S8XB0       SFP-SX
    Xcvr 4       REV 01   740-011782   PB829RB           SFP-SX
    Xcvr 5       REV 01   740-011782   P8J1SYX           SFP-SX
  PIC 1          REV 03   750-003336   HJ9954            4x OC-48 SONET, SMSR
  PIC 3          REV 02   750-012793   JM7665            1x 10GE(LAN/WAN) IQ2
  MMB 0          REV 04   710-016036   DN6913            ST-MMB2
FPC 7            REV 08   710-010845   JM3958            FPC Type 4
  CPU            REV 04   710-011481   JK3669            FPC CPU-Enhanced
  PIC 0          REV 11   750-017405   DP8837            4x 10GE (LAN/WAN) XFP
    Xcvr 1       REV 01   740-014279   753019A00277      XFP-10G-LR
    Xcvr 2       REV 02   740-011571   C850XJ00P         XFP-10G-SR
    Xcvr 3       REV 01   740-014279   AA0813N1RTG       XFP-10G-LR
  MMB 0          REV 04   710-010842   JN1971            ST-MMB
SPMB 0           REV 04   710-023321   DW3629            LCC Switch CPU
SPMB 1           REV 04   710-023321   DW3621            LCC Switch CPU
SIB 0            REV 07   710-022594   DW4200            LCC SIB
  B Board        REV 07   710-023185   DW3932            LCC SIB Mezz
SIB 1            REV 07   710-022594   DW4193            LCC SIB
  B Board        REV 07   710-023185   DW3904            LCC SIB Mezz
SIB 2
SIB 3            REV 07   710-022594   DW4210            LCC SIB
  B Board        REV 06   710-023185   DT5780            LCC SIB Mezz
SIB 4            REV 08   710-022594   DW8019            LCC SIB
  B Board        REV 06   710-023185   DT5795            LCC SIB Mezz
Fan Tray 0                                               Front Top Fan Tray
Fan Tray 1                                               Front Bottom Fan Tray
Fan Tray 2                                               Rear Fan Tray -- Rev 3
```

show chassis hardware sfc (TX Matrix Plus Router)

```
user@host> show chassis hardware sfc 0
sfc0-re0:
--------------------------------------------------------------------------
Hardware inventory:
Item             Version  Part number  Serial number     Description
Chassis                                JN112F007AHB      TXP
Midplane         REV 05   710-022574   TS4027            SFC Midplane
FPM Display      REV 03   710-024027   DX0282            TXP FPM Display
CIP 0            REV 04   710-023792   DW4889            TXP CIP
CIP 1            REV 04   710-023792   DW4887            TXP CIP
PEM 0            Rev 07   740-027463   UM26368           Power Entry Module
Routing Engine 0 REV 01   740-026942   737A-1064         SFC RE
Routing Engine 1 REV 01   740-026942   737A-1082         SFC RE
CB 0             REV 09   710-022606   DW6099            SFC Control Board
CB 1             REV 09   710-022606   DW6096            SFC Control Board
SPMB 0                    BUILTIN                        SFC Switch CPU
SPMB 1                    BUILTIN                        SFC Switch CPU
SIB F13 0        REV 04   710-022600   DX0841            F13 SIB
  B Board        REV 03   710-023431   DX0966            F13 SIB Mezz
SIB F13 1        REV 04   750-024564   DW5776            F13 SIB
  B Board        REV 03   710-023431   DW9028            F13 SIB
SIB F13 3        REV 04   750-024564   DW5762            F13 SIB
  B Board        REV 03   710-023431   DW9059            F13 SIB
SIB F13 4        REV 04   750-024564   DW5797            F13 SIB
```

```
  B Board        REV 03   710-023431   DW9041            F13 SIB
SIB F13 6        REV 04   750-024564   DW5770            F13 SIB
  B Board        REV 03   710-023431   DW9079            F13 SIB Mezz
SIB F13 7        REV 04   750-024564   DW5758            F13 SIB
  B Board        REV 03   710-023431   DW9047            F13 SIB
SIB F13 8        REV 04   750-024564   DW5761            F13 SIB
  B Board        REV 03   710-023431   DW9043            F13 SIB Mezz
SIB F13 9        REV 04   750-024564   DW5754            F13 SIB
  B Board        REV 03   710-023431   DW9078            F13 SIB Mezz
SIB F13 11       REV 04   710-022600   DX0826            F13 SIB
  B Board        REV 03   710-023431   DX0967            F13 SIB Mezz
SIB F13 12       REV 04   750-024564   DW5794            F13 SIB
  B Board        REV 03   710-023431   DW9044            F13 SIB Mezz
SIB F2S 0/0      REV 05   710-022603   DW7897            F2S SIB
  B Board        REV 05   710-023787   DW7657            NEO PMB
SIB F2S 0/2      REV 05   710-022603   DW7833            F2S SIB
  B Board        REV 05   710-023787   DW7526            NEO PMB
SIB F2S 0/4      REV 05   710-022603   DW7875            F2S SIB
  B Board        REV 05   710-023787   DW7588            NEO PMB
SIB F2S 0/6      REV 05   710-022603   DW7860            F2S SIB
  B Board        REV 05   710-023787   DW7589            NEO PMB
SIB F2S 1/0      REV 04   710-022603   DW4820            F2S SIB
  B Board        REV 05   710-023787   DW8510            NEO PMB
SIB F2S 1/2      REV 05   710-022603   DW7849            F2S SIB
  B Board        REV 05   710-023787   DW7525            NEO PMB
SIB F2S 1/4      REV 05   710-022603   DW7927            F2S SIB
  B Board        REV 05   710-023787   DW7556            F2S SIB Mezz
SIB F2S 1/6      REV 05   710-022603   DW7866            F2S SIB
  B Board        REV 05   710-023787   DW7651            NEO PMB
SIB F2S 2/0      REV 05   710-022603   DW7880            F2S SIB
  B Board        REV 05   710-023787   DW7523            NEO PMB
SIB F2S 2/2      REV 05   710-022603   DW7895            F2S SIB
  B Board        REV 05   710-023787   DW7591            NEO PMB
SIB F2S 2/4      REV 05   710-022603   DW7907            F2S SIB
  B Board        REV 05   710-023787   DW7590            NEO PMB
SIB F2S 2/6      REV 05   710-022603   DW7785            F2S SIB
  B Board        REV 05   710-023787   DW7524            NEO PMB
SIB F2S 3/0      REV 05   710-022603   DW7782            F2S SIB
  B Board        REV 05   710-023787   DW7634            NEO PMB
SIB F2S 3/2      REV 05   710-022603   DW7793            F2S SIB
  B Board        REV 05   710-023787   DW7548            NEO PMB
SIB F2S 3/4      REV 05   710-022603   DW7779            F2S SIB
  B Board        REV 05   710-023787   DW7587            NEO PMB
SIB F2S 3/6      REV 05   710-022603   DW7930            F2S SIB
  B Board        REV 05   710-023787   DW7505            NEO PMB
SIB F2S 4/0      REV 05   710-022603   DW7867            F2S SIB
  B Board        REV 05   710-023787   DW7656            NEO PMB
SIB F2S 4/2      REV 05   710-022603   DW7917            F2S SIB
  B Board        REV 05   710-023787   DW7640            NEO PMB
SIB F2S 4/4      REV 05   710-022603   DW7929            F2S SIB
  B Board        REV 05   710-023787   DW7643            NEO PMB
SIB F2S 4/6      REV 05   710-022603   DW7870            F2S SIB
  B Board        REV 05   710-023787   DW7635            NEO PMB
Fan Tray 0       REV 06   760-024497   DV7831            Front Fan Tray
Fan Tray 1       REV 06   760-024497   DV9614            Front Fan Tray
Fan Tray 2       REV 06   760-024502   DV9618            Rear Fan Tray
Fan Tray 3       REV 06   760-024502   DV9616            Rear Fan Tray
Fan Tray 4       REV 06   760-024502   DV7807            Rear Fan Tray
Fan Tray 5       REV 06   760-024502   DV7828            Rear Fan Tray
```

show chassis hardware extensive (TX Matrix Plus Router)

```
user@host> show chassis hardware extensive
sfc0-re0:
--------------------------------------------------------------------------
Hardware inventory:
Item             Version  Part number  Serial number     Description
Chassis                                JN112F007AHB      TXP
 Jedec Code:   0x7fb0            EEPROM Version:    0x02
                                 S/N:               JN112F007AHB
 Assembly ID:  0x052c            Assembly Version:  00.00
 Date:         00-00-0000        Assembly Flags:    0x00
 ID: TXP
 Board Information Record:
  Address 0x00: 00 00 00 00 00 00 00 00 00 00 00 00 00 00 00 00
 I2C Hex Data:
  Address 0x00: 7f b0 02 ff 05 2c 00 00 00 00 00 00 00 00 00 00
  Address 0x10: 00 00 00 00 00 00 00 00 00 00 00 00 00 00 00 00
  Address 0x20: 4a 4e 31 31 32 46 30 30 37 41 48 42 00 00 00 00
  Address 0x30: 00 00 00 00 00 00 00 00 00 00 00 00 00 00 00 00
  Address 0x40: 00 00 00 00 00 00 00 00 00 00 00 00 00 00 00 00
  Address 0x50: 00 00 00 00 00 00 00 00 00 00 00 00 00 00 00 00
  Address 0x60: 00 00 00 00 00 00 00 00 00 00 00 00 00 00 00 00
  Address 0x70: 00 00 00 00 00 00 00 00 00 00 00 00 00 00 00 00
Midplane         REV 05   710-022574   TS4027            SFC Midplane
 Jedec Code:   0x7fb0            EEPROM Version:    0x01
 P/N:          710-022574        S/N:               TS4027
 Assembly ID:  0x0962            Assembly Version:  01.05
 Date:         03-23-2009        Assembly Flags:    0x00
 Version:      REV 05
 ID: SFC Midplane
 Board Information Record:
  Address 0x00: ad 01 ff ff 00 1d b5 14 00 00 ff ff ff ff ff ff
 I2C Hex Data:
  Address 0x00: 7f b0 01 ff 09 62 01 05 52 45 56 20 30 35 00 00
  Address 0x10: 00 00 00 00 37 31 30 2d 30 32 32 35 37 34 00 00
  Address 0x20: 53 2f 4e 20 54 53 34 30 32 37 00 00 00 17 03 07
  Address 0x30: d9 ff ff ff ad 01 ff ff 00 1d b5 14 00 00 ff ff
  Address 0x40: ff ff ff ff 00 ff ff ff ff ff ff ff ff ff ff ff
  Address 0x50: ff ff ff ff ff ff ff ff ff ff ff ff ff ff ff ff
  Address 0x60: ff ff ff ff ff ff ff ff ff ff ff ff ff ff ff ff
  Address 0x70: ff ff ff ff ff ff ff ff ff ff ff ff ff ff ff ff
FPM Display      REV 03   710-024027   DX0282            TXP FPM Display
 Jedec Code:   0x7fb0            EEPROM Version:    0x01
 P/N:          710-024027        S/N:               DX0282
 Assembly ID:  0x096c            Assembly Version:  01.03
 Date:         02-10-2009        Assembly Flags:    0x00
 Version:      REV 03
 ID: TXP FPM Display             FRU Model Number:  CRAFT-TXP
 Board Information Record:
  Address 0x00: ff ff ff ff ff ff ff ff ff ff ff ff ff ff ff ff
 I2C Hex Data:
  Address 0x00: 7f b0 01 ff 09 6c 01 03 52 45 56 20 30 33 00 00
  Address 0x10: 00 00 00 00 37 31 30 2d 30 32 34 30 32 37 00 00
  Address 0x20: 53 2f 4e 20 44 58 30 32 38 32 00 00 00 0a 02 07
  Address 0x30: d9 ff ff ff ff ff ff ff ff ff ff ff ff ff ff ff
  Address 0x40: ff ff ff ff 01 00 00 00 00 00 00 00 00 00 00 43
  Address 0x50: 52 41 46 54 2d 54 58 50 00 00 00 00 00 00 00 00
  Address 0x60: 00 00 00 00 00 00 ff ff ff ff ff ff ff ff ff ff
  Address 0x70: ff ff ff ff ff ff ff ff ff ff ff ff ff ff ff ff
CIP 0            REV 04   710-023792   DW4889            TXP CIP
```

```
 Jedec Code:   0x7fb0            EEPROM Version:    0x01
 P/N:          710-023792        S/N:               DW4889
 Assembly ID:  0x0969            Assembly Version:  01.04
 Date:         01-26-2009        Assembly Flags:    0x00
 Version:      REV 04
 ID: TXP CIP                     FRU Model Number:  CIP-TXP
 Board Information Record:
  Address 0x00: ff ff ff ff ff ff ff ff ff ff ff ff ff ff ff ff
```

show chassis hardware clei-models (TX Matrix Plus Router)

```
user@host> show chassis hardware clei-models
sfc0-re0:
--------------------------------------------------------------------------
Hardware inventory:
Item             Version  Part number  CLEI code         FRU model number
Midplane         REV 05   710-022574                     CHAS-BP-TXP-S
FPM Display      REV 03   710-024027                     CRAFT-TXP-S
CIP 0            REV 05   710-023792                     CIP-TXP-S
CIP 1            REV 05   710-023792                     CIP-TXP-S
PEM 0            Rev 04   740-027463   IPUPAFGKTA        PWR-TXP-7-60-DC
PEM 1            Rev 04   740-027463   IPUPAFGKTA        PWR-TXP-7-60-DC
Routing Engine 0 REV 06   740-026942                     RE-DUO-C2600-16G-S
Routing Engine 1 REV 06   740-026942                     RE-DUO-C2600-16G-S
CB 0             REV 05   710-022606                     CB-TXP-S
CB 1             REV 09   710-022606                     CB-TXP-S
SIB F13 0        REV 04   750-024564                     SIB-TXP-F13
SIB F13 3        REV 04   750-024564                     SIB-TXP-F13
SIB F13 8        REV 04   750-024564                     SIB-TXP-F13
SIB F13 11       REV 04   750-024564                     SIB-TXP-F13
SIB F13 12       REV 03   750-024564                     SIB-TXP-F13
SIB F2S 0/0      REV 05   710-022603                     SIB-TXP-F2S-S
SIB F2S 0/2      REV 05   710-022603                     SIB-TXP-F2S-S
SIB F2S 0/4      REV 04   710-022603                     SIB-TXP-F2S-S
SIB F2S 0/6      REV 04   710-022603                     SIB-TXP-F2S-S
SIB F2S 1/0      REV 04   710-022603                     SIB-TXP-F2S-S
SIB F2S 1/2      REV 05   710-022603                     SIB-TXP-F2S-S
SIB F2S 1/4      REV 04   710-022603                     SIB-TXP-F2S-S
SIB F2S 1/6      REV 05   710-022603                     SIB-TXP-F2S-S
SIB F2S 2/0      REV 04   710-022603                     SIB-TXP-F2S-S
SIB F2S 2/2      REV 04   710-022603                     SIB-TXP-F2S-S
SIB F2S 2/4      REV 05   710-022603                     SIB-TXP-F2S-S
SIB F2S 2/6      REV 04   710-022603                     SIB-TXP-F2S-S
SIB F2S 3/0      REV 05   710-022603                     SIB-TXP-F2S-S
SIB F2S 3/2      REV 03   710-022603                     SIB-TXP-F2S-S
SIB F2S 3/4      REV 05   710-022603                     SIB-TXP-F2S-S
SIB F2S 3/6      REV 03   710-022603                     SIB-TXP-F2S-S
SIB F2S 4/0      REV 03   710-022603                     SIB-TXP-F2S-S
SIB F2S 4/2      REV 05   710-022603                     SIB-TXP-F2S-S
SIB F2S 4/4      REV 04   710-022603                     SIB-TXP-F2S-S
SIB F2S 4/6      REV 03   710-022603                     SIB-TXP-F2S-S
Fan Tray 0       REV 02   760-024497                     FANTRAY-TXP-H-S
Fan Tray 1       REV 02   760-024497                     FANTRAY-TXP-H-S
Fan Tray 2       REV 05   760-024502                     FANTRAY-TXP-V-S
Fan Tray 3
Fan Tray 4       REV 05   760-024502                     FANTRAY-TXP-V-S
Fan Tray 5       REV 02   760-024502                     FANTRAY-TXP-V-S

lcc0-re0:
--------------------------------------------------------------------------
Hardware inventory:
```

```
Item             Version  Part number  CLEI code         FRU model number
Midplane         REV 03   710-017247                     CHAS-BP-T1600-S
FPM Display      REV 01   710-021387                     CRAFT-T1600-S
CIP              REV 06   710-002895                     CIP-L-T640-S
PEM 1            Rev 02   740-023211   IPUPAC8KTA        PWR-T1600-4-60-DC-S
SCG 0            REV 15   710-003423                     SCG-T-S
SCG 1            REV 15   710-003423                     SCG-T-S
Routing Engine 0 REV 01   740-026941                     RE-DUO-C1800-8G-S
Routing Engine 1 REV 01   740-026941                     RE-DUO-C1800-8G-S
CB 0             REV 06   710-022597                     CB-LCC-S
CB 1             REV 06   710-022597                     CB-LCC-S
FPC 1            REV 07   710-013035                     T640-FPC3-ES
  PIC 0          REV 05   750-015217                     PC-8GE-TYPE3-SFP-IQ2
  PIC 1          REV 03   750-004424                     PC-1XGE-LR
  PIC 2          REV 01   750-003336                     PC-4OC48-SON-SMSR
FPC 3            REV 12   710-013037                     T1600-FPC4-ES
  PIC 0          REV 02   750-010850                     PD-1OC768-SON-SR
FPC 4            REV 05   710-021534                     T640-FPC1-ES
  PIC 0          REV 04   750-014627                     PB-4OC3-1OC12-SON-SFP
  PIC 1          REV 22   750-005634                     PB-1CHOC12SMIR-QPP
  PIC 2          REV 09   750-002911                     PB-4FE-TX
  PIC 3          REV 08   750-021652                     PB-1CHOC12-STM4-IQE-SFP
FPC 5            REV 07   710-007529                     T640-FPC3
  PIC 0          REV 14   750-009567                     PC-1XGE-XENPAK
  PIC 1          REV 16   750-007141                     PC-10GE-SFP
  PIC 2          REV 12   750-009567                     PC-1XGE-XENPAK
FPC 6            REV 07   710-013035                     T640-FPC3-ES
  PIC 0          REV 09   750-009567                     PC-1XGE-XENPAK
  PIC 1          REV 06   750-015217                     PC-8GE-TYPE3-SFP-IQ2
  PIC 2          REV 06   750-015217                     PC-8GE-TYPE3-SFP-IQ2
FPC 7            REV 03   710-021540                     T640-FPC2-ES
  PIC 0          REV 13   750-001901                     PB-4OC12-SON-SMIR
  PIC 1          REV 05   750-001900                     PB-1OC48-SON-SMSR
  PIC 2          REV 10   750-008155                     PB-2GE-SFP-QPP
  PIC 3          REV 03   750-014638                     PB-1OC48-SON-B-SFP
SIB 0            REV 07   710-022594                     SIB-TXP-T1600-S
SIB 1            REV 07   710-022594                     SIB-TXP-T1600-S
SIB 3            REV 06   710-022594                     SIB-TXP-T1600-S
SIB 4            REV 08   710-022594                     SIB-TXP-T1600-S
Fan Tray 0                                               FANTRAY-T-S
Fan Tray 1                                               FANTRAY-T-S
Fan Tray 2                                               FANTRAY-TXP-R-S

lcc1-re0:
--------------------------------------------------------------------------
Hardware inventory:
Item             Version  Part number  CLEI code         FRU model number
Midplane         REV 04   710-017247                     CHAS-BP-T1600-S
FPM Display      REV 01   710-021387                     CRAFT-T1600-S
CIP              REV 06   710-002895                     CIP-L-T640-S
PEM 0            Rev 02   740-023211   IPUPAC8KTA        PWR-T1600-4-60-DC-S
SCG 0            REV 15   710-003423                     SCG-T-S
SCG 1            REV 15   710-003423                     SCG-T-S
Routing Engine 0 REV 01   740-026941                     RE-DUO-C1800-8G-S
Routing Engine 1 REV 01   740-026941                     RE-DUO-C1800-8G-S
CB 0             REV 06   710-022597                     CB-LCC-S
CB 1             REV 06   710-022597                     CB-LCC-S
FPC 0            REV 02   710-010845                     T640-FPC4-ES
  PIC 0          REV 11   750-017405                     PD-4XGE-XFP
FPC 1            REV 16   710-013037                     T1600-FPC4-ES
  PIC 1          REV 06   750-034781                     PD-1CE-CFP
```

```
FPC 2            REV 16   710-013037                    T1600-FPC4-ES
  PIC 1          REV 05   750-034781                    PD-1CE-CFP
FPC 3            REV 10   710-021534                    T640-FPC1-ES
  PIC 0          REV 13   750-012266                    PB-4GE-TYPE1-SFP-IQ2
  PIC 1          REV 01   750-007641                    PE-1GE-SFP-QPP
  PIC 3          REV 17   750-007444                    PB-1CHSTM1-SMIR-QPP
FPC 4            REV 06   710-013035                    T640-FPC3-ES
  PIC 0          REV 22   750-007141                    PC-10GE-SFP
  PIC 1          REV 16   750-009450                    PC-1OC192-SON-SR2
  PIC 2          REV 05   750-004424                    PC-1XGE-LR
  PIC 3          REV 12   750-013423                    PC-MS-500-3
FPC 5            REV 07   710-013560                    T640-FPC3-E2
  PIC 0          REV 11   750-012793                    PC-1XGE-TYPE3-XFP-IQ2
  PIC 1          REV 01   750-004695                    PC-TUNNEL
  PIC 2          REV 32   750-003700                    PC-1OC192-SON-VSR
  PIC 3          REV 12   750-009553                    PC-4OC48-SON-SFP
FPC 6            REV 07   710-013035                    T640-FPC3-ES
  PIC 0          REV 07   750-015217                    PC-8GE-TYPE3-SFP-IQ2
  PIC 1          REV 03   750-003336                    PC-4OC48-SON-SMSR
  PIC 3          REV 02   750-012793                    PC-1XGE-TYPE3-XFP-IQ2
FPC 7            REV 08   710-010845                    T640-FPC4-ES
  PIC 0          REV 11   750-017405                    PD-4XGE-XFP
SIB 0            REV 07   710-022594                    SIB-TXP-T1600-S
SIB 1            REV 07   710-022594                    SIB-TXP-T1600-S
SIB 3            REV 07   710-022594                    SIB-TXP-T1600-S
SIB 4            REV 08   710-022594                    SIB-TXP-T1600-S
Fan Tray 0                                              FANTRAY-T-S
Fan Tray 1                                              FANTRAY-T-S
Fan Tray 2                                              FANTRAY-TXP-R-S
```

show chassis hardware detail (TX Matrix Plus Router)

```
user@host> show chassis hardware detail
sfc0-re0:
--------------------------------------------------------------------------
Hardware inventory:
Item             Version  Part number  Serial number     Description
Chassis                                JN111B023AHB      TXP
Midplane         REV 01   710-022574   TR7990            SFC Midplane
FPM Display      REV 03   710-024027   DW4699            TXP FPM Display
CIP 0            REV 01   710-023792   DR1437            TXP CIP
CIP 1            REV 02   710-023792   DS4564            TXP CIP
PEM 0            Rev 07   740-027463   UM26360           Power Entry Module
Routing Engine 0 REV 01   740-026942   737A-1024         SFC RE
  ad0    3887 MB  SMART CF             200811050193CEB1CEB1 Compact Flash
  ad1   30533 MB  SAMSUNG MCBQE32G8MPP-0V SY814A0762     Disk 1
Routing Engine 1 REV 01   740-026942   737A-1024         SFC RE
  ad0    3887 MB  SMART CF             20081105004C19A019A0 Compact Flash
  ad1   30533 MB  SAMSUNG MCBQE32G8MPP-0V SY814A0794     Disk 1
CB 0             REV 03   710-022606   DR7134            SFC Control Board
CB 1             REV 01   710-022606   DP8890            SFC Control Board
SPMB 0                    BUILTIN                        SFC Switch CPU
SPMB 1                    BUILTIN                        SFC Switch CPU
SIB F13 0        REV 03   750-024564   DT9478            F13 SIB
  B Board        REV 02   710-023431   DT6554            F13 SIB
SIB F13 1        REV 03   750-024564   DT9454            F13 SIB
  B Board        REV 02   710-023431   DT6551            F13 SIB
SIB F2S 0/0      REV 02   710-022603   DT2838            F2S SIB
  B Board        REV 02   710-023787   DT1725            NEO PMB
SIB F2S 0/2      REV 02   710-022603   DT2824            F2S SIB
  B Board        REV 02   710-023787   DT1706            NEO PMB
```

```
SIB F2S 0/4      REV 02   710-022603   DT2822            F2S SIB
  B Board        REV 02   710-023787   DT1696            NEO PMB
SIB F2S 0/6      REV 02   710-022603   DT2823            F2S SIB
  B Board        REV 02   710-023787   DT1717            NEO PMB
SIB F2S 1/0      REV 03   710-022603   DV0059            F2S SIB
  B Board        REV 03   710-023787   DT9942            NEO PMB
SIB F2S 1/2      REV 02   710-022603   DT2826            F2S SIB
  B Board        REV 02   710-023787   DT1713            NEO PMB
SIB F2S 1/4      REV 03   710-022603   DV0092            F2S SIB
  B Board        REV 03   710-023787   DV0000            NEO PMB
SIB F2S 1/6      REV 03   710-022603   DV0079            F2S SIB
  B Board        REV 03   710-023787   DT9972            NEO PMB
SIB F2S 2/0      REV 03   710-022603   DV0100            F2S SIB
  B Board        REV 03   710-023787   DT9925            NEO PMB
SIB F2S 2/2      REV 03   710-022603   DV0050            F2S SIB
  B Board        REV 03   710-023787   DV0005            NEO PMB
SIB F2S 2/4      REV 03   710-022603   DV0097            F2S SIB
  B Board        REV 03   710-023787   DT9936            NEO PMB
Fan Tray 0       REV 02   760-024497   DR8286            Front Fan Tray
Fan Tray 1       REV 06   760-024497   DV9624            Front Fan Tray
Fan Tray 2       REV 02   760-024502   DR8259            Rear Fan Tray
Fan Tray 3       REV 02   760-024502   DR8270            Rear Fan Tray
Fan Tray 4       REV 02   760-024502   DR8284            Rear Fan Tray
Fan Tray 5       REV 06   760-024502   DV7813            Rear Fan Tray

lcc0-re0:
--------------------------------------------------------------------------
Hardware inventory:
Item             Version  Part number  Serial number     Description
Chassis                                JN1101F27AHA      T1600
Midplane         REV 04   710-017247   RC5317            T Series Backplane
FPM GBUS         REV 10   710-002901   DS8197            T640 FPM Board
FPM Display      REV 01   710-021387   DS6433            T1600 FPM Display
CIP              REV 06   710-002895   DS1493            T Series CIP
PEM 0            Rev 08   740-017906   UD26601           Power Entry Module 3x80
SCG 0            REV 15   710-003423   DP5847            T640 Sonet Clock Gen.
SCG 1            REV 15   710-003423   DR0924            T640 Sonet Clock Gen.
Routing Engine 0 REV 01   740-026942   737F-1024         LCC RE
  ad0    3887 MB  SMART CF             2008110502B63E513E51 Compact Flash
  ad1   30533 MB  SAMSUNG MCBQE32G8MPP-0V SY814A1208     Disk 1
Routing Engine 1 REV 01   740-026942   737F-1024         LCC RE
  ad0    3887 MB  SMART CF             2008110500F9A8A8A8A8 Compact Flash
  ad1   30533 MB  SAMSUNG MCBQE32G8MPP-0V SY814A1076     Disk 1
CB 0             REV 05   710-022597   DV4264            LCC Control Board
CB 1             REV 03   710-022597   DP8558            LCC Control Board
FPC 0            REV 14   710-013037   DS9967            FPC Type 4-ES
  CPU            REV 08   710-016744   DS3989            ST-PMB2
  PIC 0          REV 12   750-013198   DL7506            1x Tunnel
  PIC 1          REV 12   750-013198   DL7505            1x Tunnel
  MMB 0          REV 01   710-025563   DS8524            ST-MMB2
  MMB 1          REV 01   710-025563   DS8373            ST-MMB2
FPC 1            REV 14   710-013037   DT0027            FPC Type 4-ES
  CPU            REV 09   710-016744   DS7684            ST-PMB2
  PIC 0          REV 12   750-013198   DL7512            1x Tunnel
  PIC 1          REV 12   750-013198   DL7498            1x Tunnel
  MMB 0          REV 01   710-025563   DS8494            ST-MMB2
  MMB 1          REV 01   710-025563   DS8436            ST-MMB2
SPMB 0           REV 04   710-023321   DV3867            LCC Switch CPU
SPMB 1           REV 02   710-023321   DP0238            LCC Switch CPU
SIB 0            REV 06   710-022594   DT8268            LCC SIB
  B Board        REV 06   710-023185   DT5791            LCC SIB Mezz
```

```
SIB 1            REV 06   710-022594   DT8261            LCC SIB
  B Board        REV 06   710-023185   DT5769            LCC SIB Mezz
SIB 2            REV 04   710-022594   DS2315            LCC SIB
  B Board        REV 06   710-023185   DT5788            LCC SIB Mezz
SIB 3            REV 06   710-022594   DT8253            LCC SIB
  B Board        REV 06   710-023185   DT5811            LCC SIB Mezz
SIB 4            REV 06   710-022594   DT8248            LCC SIB
  B Board        REV 06   710-023185   DT5812            LCC SIB Mezz
Fan Tray 0                                               Front Top Fan Tray
Fan Tray 1                                               Front Bottom Fan Tray
Fan Tray 2                                               Rear Fan Tray
```

show chassis hardware models (TX Matrix Plus Router)

```
user@host> show chassis hardware models
sfc0-re0:
--------------------------------------------------------------------------
Hardware inventory:
Item             Version  Part number  Serial number     FRU model number
FPM Display      REV 03   710-024027   DX0282            CRAFT-TXP
CIP 0            REV 04   710-023792   DW4889            CIP-TXP
CIP 1            REV 04   710-023792   DW4887            CIP-TXP
PEM 0            Rev 07   740-027463   UM26368           ÿÿÿÿÿÿÿÿÿÿÿÿÿÿÿÿÿÿÿÿÿÿ
Routing Engine 0 REV 01   740-026942   737A-1064         RE-TXP-SFC-DUO-2600-16G
Routing Engine 1 REV 01   740-026942   737A-1082         RE-TXP-SFC-DUO-2600-16G
CB 0             REV 09   710-022606   DW6099            CB-TXP
CB 1             REV 09   710-022606   DW6096            CB-TXP
SIB F13 1        REV 04   750-024564   DW5776            SIB-TXP-F13
SIB F13 3        REV 04   750-024564   DW5762            SIB-TXP-F13
SIB F13 4        REV 04   750-024564   DW5797            SIB-TXP-F13
SIB F13 6        REV 04   750-024564   DW5770            SIB-TXP-F13
SIB F13 7        REV 04   750-024564   DW5758            SIB-TXP-F13
SIB F13 8        REV 04   750-024564   DW5761            SIB-TXP-F13
SIB F13 9        REV 04   750-024564   DW5754            SIB-TXP-F13
SIB F13 12       REV 04   750-024564   DW5794            SIB-TXP-F13
SIB F2S 0/0      REV 05   710-022603   DW7897
SIB F2S 0/2      REV 05   710-022603   DW7833
SIB F2S 0/4      REV 05   710-022603   DW7875
SIB F2S 0/6      REV 05   710-022603   DW7860
SIB F2S 1/0      REV 04   710-022603   DW4820
SIB F2S 1/2      REV 05   710-022603   DW7849
SIB F2S 1/4      REV 05   710-022603   DW7927            SIB-TXP-F2S
SIB F2S 1/6      REV 05   710-022603   DW7866
SIB F2S 2/0      REV 05   710-022603   DW7880
SIB F2S 2/2      REV 05   710-022603   DW7895
SIB F2S 2/4      REV 05   710-022603   DW7907
SIB F2S 2/6      REV 05   710-022603   DW7785
SIB F2S 3/0      REV 05   710-022603   DW7782
SIB F2S 3/2      REV 05   710-022603   DW7793
SIB F2S 3/4      REV 05   710-022603   DW7779
SIB F2S 3/6      REV 05   710-022603   DW7930
SIB F2S 4/0      REV 05   710-022603   DW7867
SIB F2S 4/2      REV 05   710-022603   DW7917
SIB F2S 4/4      REV 05   710-022603   DW7929
SIB F2S 4/6      REV 05   710-022603   DW7870
Fan Tray 0       REV 06   760-024497   DV7831            FANTRAY-TXP-F
Fan Tray 1       REV 06   760-024497   DV9614            FANTRAY-TXP-F
Fan Tray 2       REV 06   760-024502   DV9618            FANTRAY-TXP-R
Fan Tray 3       REV 06   760-024502   DV9616            FANTRAY-TXP-R
Fan Tray 4       REV 06   760-024502   DV7807            FANTRAY-TXP-R
Fan Tray 5       REV 06   760-024502   DV7828            FANTRAY-TXP-R
```

```
lcc0-re0:
--------------------------------------------------------------------------
Hardware inventory:
Item             Version  Part number  Serial number     FRU model number
Midplane         REV 03   710-017247   RC3765            CHAS-BP-T1600-S
FPM Display      REV 01   710-021387   DN5441            CRAFT-T1600-S
CIP              REV 06   710-002895   DP6021            CIP-L-T640-S
PEM 0            Rev 07   740-017906   UA26384           PWR-T1600-3-80-DC-S
PEM 1            Rev 07   740-017906   UA26296           PWR-T1600-3-80-DC-S
SCG 0            REV 15   710-003423   DR0875            SCG-T-S
CB 0             REV 06   710-022597   DW8534            CB-LCC
CB 1             REV 06   710-022597   DW8527            CB-LCC
FPC 4            REV 12   710-013037   DJ8717            T1600-FPC4-ES
  PIC 0          REV 11   750-017405   DP8795            PD-4XGE-XFP
  PIC 1          REV 11   750-017405   DP8794            PD-4XGE-XFP
FPC 6            REV 14   710-013037   DS5335            T1600-FPC4-ES
  PIC 0          REV 13   750-017405   DS7634            PD-4XGE-XFP
  PIC 1          REV 13   750-017405   DS7637            PD-4XGE-XFP
FPC 7            REV 07   710-013035   DM0990            T1600-FPC3-ES
  PIC 0          REV 16   750-007141   JJ8067            PC-10GE-SFP
  PIC 1          REV 08   750-015749   WE9598            PC-1OC192-SON-XFP
  PIC 2          REV 10   750-009450   HX6466            PC-1OC192-SON-SR2
SIB 0            REV 08   710-022594   DW8033            SIB-TXP-T1600-S
SIB 1            REV 08   710-022594   DW8044            SIB-TXP-T1600-S
SIB 2            REV 08   710-022594   DW8020            SIB-TXP-T1600-S
SIB 3            REV 08   710-022594   DW8063            SIB-TXP-T1600-S
SIB 4            REV 08   710-022594   DW8064            SIB-TXP-T1600-S
Fan Tray 0                                               FANTRAY-T-S
Fan Tray 1                                               FANTRAY-T-S
Fan Tray 2                                               FANTRAY-TXP-R-S

lcc1-re0:
--------------------------------------------------------------------------
Hardware inventory:
Item             Version  Part number  Serial number     FRU model number
Midplane         REV 04   710-017247   RC5361            CHAS-BP-T1600-S
FPM Display      REV 01   710-021387   DS6430            CRAFT-T1600-S
CIP              REV 06   710-002895   DS4239            CIP-L-T640-S
PEM 0            Rev 08   740-017906   UD26649           PWR-T1600-3-80-DC-S
SCG 0            REV 15   710-003423   DP5820            SCG-T-S
CB 0             REV 06   710-022597   DW8523            CB-LCC
CB 1             REV 06   710-022597   DW8528            CB-LCC
FPC 4            REV 12   710-013037   DP8509            T1600-FPC4-ES
  PIC 0          REV 11   750-017405   DP8808            PD-4XGE-XFP
  PIC 1          REV 11   750-017405   DP7263            PD-4XGE-XFP
FPC 6            REV 14   710-013037   DS9961            T1600-FPC4-ES
  PIC 0          REV 13   750-017405   DS5532            PD-4XGE-XFP
  PIC 1          REV 13   750-017405   DS7639            PD-4XGE-XFP
FPC 7            REV 03   710-013035   DF5564            T1600-FPC3-ES
  PIC 0          REV 16   750-007141   JJ8063            PC-10GE-SFP
SIB 0            REV 08   710-022594   DW8035            SIB-TXP-T1600-S
SIB 1            REV 10   710-022594   DX7672            SIB-TXP-T1600-S
SIB 2            REV 08   710-022594   DW8060            SIB-TXP-T1600-S
SIB 3            REV 08   710-022594   DW8072            SIB-TXP-T1600-S
SIB 4            REV 08   710-022594   DW8043            SIB-TXP-T1600-S
Fan Tray 0                                               FANTRAY-T-S
Fan Tray 1                                               FANTRAY-T-S
Fan Tray 2                                               FANTRAY-TXP-R-S

lcc2-re0:
```

```
---------------------------------------------------------------------------
Hardware inventory:
Item             Version  Part number  Serial number     FRU model number
Midplane         REV 03   710-017247   RC3956            CHAS-BP-T1600-S
FPM Display      REV 01   710-021387   DN7030            CRAFT-T1600-S
CIP              REV 06   710-002895   DM3962            CIP-L-T640-S
PEM 0            Rev 08   740-017906   UD26519           PWR-T1600-3-80-DC-S
PEM 1            Rev 07   740-017906   UC26601           PWR-T1600-3-80-DC-S
SCG 0            REV 15   710-003423   DP0277            SCG-T-S
CB 0             REV 06   710-022597   DW8524            CB-LCC
CB 1             REV 06   710-022597   DW8536            CB-LCC
FPC 4            REV 12   710-013037   DR1194            T1600-FPC4-ES
  PIC 0          REV 11   750-017405   DP8811            PD-4XGE-XFP
  PIC 1          REV 11   750-017405   DP8823            PD-4XGE-XFP
FPC 5            REV 12   710-013037   DR1184            T1600-FPC4-ES
  PIC 1          REV 11   750-017405   DP4744            PD-4XGE-XFP
FPC 6            REV 12   710-013037   DN8622            T1600-FPC4-ES
  PIC 0          REV 14   750-012518   JY9924            PD-4OC192-SON-XFP
  PIC 1          REV 11   750-017405   DP8776            PD-4XGE-XFP
FPC 7            REV 04   710-013560   JR3968            T640-FPC3-E2
  PIC 0          REV 16   750-007141   NC9330            PC-10GE-SFP
SIB 0            REV 07   710-022594   DW4217            SIB-TXP-T1600-S
SIB 1            REV 07   710-022594   DW4213            SIB-TXP-T1600-S
SIB 2            REV 07   710-022594   DW4189            SIB-TXP-T1600-S
SIB 3            REV 07   710-022594   DW4173            SIB-TXP-T1600-S
SIB 4            REV 07   710-022594   DW4201            SIB-TXP-T1600-S
Fan Tray 0                                               FANTRAY-T-S
Fan Tray 1                                               FANTRAY-T-S
Fan Tray 2                                               FANTRAY-TXP-R-S

lcc3-re0:
---------------------------------------------------------------------------
Hardware inventory:
Item             Version  Part number  Serial number     FRU model number
Midplane         REV 04   710-017247   RC5319            CHAS-BP-T1600-S
FPM Display      REV 01   710-021387   DS6402            CRAFT-T1600-S
CIP              REV 06   710-002895   DR9973            CIP-L-T640-S
PEM 0            Rev 07   740-017906   UC26496           PWR-T1600-3-80-DC-S
PEM 1            Rev 07   740-017906   UC26599           PWR-T1600-3-80-DC-S
SCG 0            REV 15   710-003423   DP5831            SCG-T-S
CB 0             REV 06   710-022597   DW8533            CB-LCC
CB 1             REV 06   710-022597   DW8538            CB-LCC
FPC 0            REV 14   710-013037   DS5345            T1600-FPC4-ES
  PIC 0          REV 13   750-017405   DS7641            PD-4XGE-XFP
  PIC 1          REV 13   750-017405   DS5479            PD-4XGE-XFP
FPC 1            REV 14   710-013037   DS7338            T1600-FPC4-ES
  PIC 0          REV 13   750-017405   DS7631            PD-4XGE-XFP
  PIC 1          REV 13   750-017405   DS7632            PD-4XGE-XFP
FPC 2            REV 14   710-013037   DS9962            T1600-FPC4-ES
  PIC 0          REV 13   750-017405   DS7581            PD-4XGE-XFP
  PIC 1          REV 13   750-017405   DS7627            PD-4XGE-XFP
FPC 4            REV 10   710-010845   JZ6573            T640-FPC4-ES
  PIC 0          REV 14   750-012518   JT5124            PD-4OC192-SON-XFP
FPC 5            REV 14   710-013037   DT0016            T1600-FPC4-ES
  PIC 0          REV 14   750-012518   JY9918            PD-4OC192-SON-XFP
FPC 7            REV 07   710-013035   DM0967            T1600-FPC3-ES
  PIC 0          REV 16   750-007141   JJ8059            PC-10GE-SFP
  PIC 1          REV 13   750-004695   DM5712            PC-TUNNEL
SIB 0            REV 07   710-022594   DW4174            SIB-TXP-T1600-S
SIB 1            REV 07   710-022594   DW4207            SIB-TXP-T1600-S
SIB 2            REV 06   710-022594   DT8231            SIB-TXP-T1600-S
```

```
SIB 3            REV 07   710-022594   DW4175            SIB-TXP-T1600-S
SIB 4            REV 07   710-022594   DW4209            SIB-TXP-T1600-S
Fan Tray 0                                               FANTRAY-T-S
Fan Tray 1                                               FANTRAY-T-S
Fan Tray 2                                               FANTRAY-TXP-R-S
```

show chassis hardware (TX Matrix Plus Router with 3D SIBs)

```
user@host> show chassis hardware
sfc0-re0:
--------------------------------------------------------------------------
Hardware inventory:
Item             Version  Part number  Serial number     Description
Chassis                                JN11CAAA4AHB      TXP
Midplane         REV 05   710-022574   ABAC4696          SFC Midplane
FPM Display      REV 09   710-024027   EH3138            TXP FPM Display
CIP 0            REV 12   710-023792   EF6349            TXP CIP
CIP 1            REV 12   710-023792   EG5294            TXP CIP
PEM 0            Rev 06   740-027463   XH04595           Power Entry Module
PEM 1            Rev 06   740-027463   XH04592           Power Entry Module
Routing Engine 0 REV 07   740-026942   P737A-002541      RE-DUO-2600
Routing Engine 1 REV 07   740-026942   P737A-002602      RE-DUO-2600
CB 0             REV 15   710-022606   EH4376            SFC Control Board
CB 1             REV 15   710-022606   EH4379            SFC Control Board
SPMB 0                    BUILTIN                        SFC Switch CPU
SPMB 1                    BUILTIN                        SFC Switch CPU
SIB F13 0        REV 10   750-035002   EM9305            F13 SIB 3D
  B Board        REV 06   711-035082   EM9667            F13 SIB 3D Mezz
  P Board        REV 05   711-043544   EM9708            F13 SIB 3D Power
  Xcvr 0         REV 01   740-047547   XB34FB00S         CXP Module
  Xcvr 2         REV 01   740-047547   XB48FB01H         CXP Module
  Xcvr 4         REV 01   740-047547   XB34FB02W         CXP Module
  Xcvr 6         REV 01   740-047547   XB34FB01T         CXP Module
  Xcvr 8         REV 01   740-047547   XB48FB00W         CXP Module
  Xcvr 10        REV 01   740-047547   XB34FB01S         CXP Module
  Xcvr 12        REV 01   740-047547   XB34FB03H         CXP Module
  Xcvr 14        REV 01   740-047547   XB34FB023         CXP Module
SIB F13 3        REV 01   710-035001   EJ2612            F13 SIB 3D
  B Board        REV 01   711-035082   EJ3815            F13 SIB 3D Mezz
  P Board        REV 01   711-043544   EJ2678            F13 SIB 3D Power
  Xcvr 0         REV 01   740-047547   XB48FB04C         CXP Module
  Xcvr 2         REV 01   740-047547   XB48FB00Z         CXP Module
  Xcvr 4         REV 01   740-047547   XB47FB036         CXP Module
  Xcvr 6         REV 01   740-047547   XB47FB029         CXP Module
  Xcvr 8         REV 01   740-047547   XB48FB02N         CXP Module
  Xcvr 10        REV 01   740-047547   XB42FB0CS         CXP Module
  Xcvr 12        REV 01   740-047547   XB47FB01X         CXP Module
  Xcvr 14        REV 01   740-047547   XB48FB02F         CXP Module
SIB F13 6        REV 05   750-035002   EK2675            F13 SIB 3D
  B Board        REV 03   711-035082   EK2612            F13 SIB 3D Mezz
  P Board        REV 04   711-043544   EK1179            F13 SIB 3D Power
  Xcvr 0         REV 01   740-047547   XB48FB01T         CXP Module
  Xcvr 2         REV 01   740-047547   XB48FB02M         CXP Module
  Xcvr 4         REV 01   740-047547   XB48FB031         CXP Module
  Xcvr 6         REV 01   740-047547   XB48FB04P         CXP Module
  Xcvr 8         REV 01   740-047547   XB48FB02T         CXP Module
  Xcvr 10        REV 01   740-047547   XB34FB01V         CXP Module
  Xcvr 12        REV 01   740-047547   XB48FB02C         CXP Module
  Xcvr 14                 NON-JNPR                       No Module
SIB F13 12       REV 01   710-035001   EJ2631            F13 SIB 3D
  B Board        REV 01   711-035082   EJ3808            F13 SIB 3D Mezz
```

```
  P Board        REV 01   711-043544   EJ2676            F13 SIB 3D Power
SIB F2S 0/0      REV 01   711-034977   EH9829            F2S SIB 3D
  B Board        REV 01   711-034979   EH9927            F2S SIB 3D Mezz
SIB F2S 0/2      REV 01   711-034977   EH9791            F2S SIB 3D
  B Board        REV 01   711-034979   EH9852            F2S SIB 3D Mezz
SIB F2S 0/4      REV 01   711-034977   EH9803            F2S SIB 3D
  B Board        REV 01   711-034979   EH9915            F2S SIB 3D Mezz
SIB F2S 0/6      REV 01   711-034977   EH9763            F2S SIB 3D
  B Board        REV 01   711-034979   EH9880            F2S SIB 3D Mezz
SIB F2S 1/0      REV 01   711-034977   EH9757            F2S SIB 3D
  B Board        REV 01   711-034979   EH9889            F2S SIB 3D Mezz
SIB F2S 1/2      REV 01   711-034977   EH9815            F2S SIB 3D
  B Board        REV 01   711-034979   EH9890            F2S SIB 3D Mezz
SIB F2S 1/4      REV 08   750-034978   EN1954            F2S SIB 3D
  B Board        REV 02   711-034979   EN1436            F2S SIB 3D Mezz
SIB F2S 1/6      REV 01   711-034977   EJ7054            F2S SIB 3D
  B Board        REV 01   711-034979   EJ8238            F2S SIB 3D Mezz
SIB F2S 2/0      REV 01   711-034977   EH9830            F2S SIB 3D
  B Board        REV 01   711-034979   EH9844            F2S SIB 3D Mezz
SIB F2S 2/2      REV 01   711-034977   EH9818            F2S SIB 3D
  B Board        REV 01   711-034979   EH9888            F2S SIB 3D Mezz
SIB F2S 2/4      REV 01   711-034977   EH9795            F2S SIB 3D
  B Board        REV 01   711-034979   EH9869            F2S SIB 3D Mezz
SIB F2S 2/6      REV 01   711-034977   EJ7026            F2S SIB 3D
  B Board        REV 01   711-034979   EJ8273            F2S SIB 3D Mezz
SIB F2S 3/0      REV 01   711-034977   EH9811            F2S SIB 3D
  B Board        REV 01   711-034979   EH9892            F2S SIB 3D Mezz
SIB F2S 3/2      REV 01   711-034977   EH9812            F2S SIB 3D
  B Board        REV 01   711-034979   EH9877            F2S SIB 3D Mezz
SIB F2S 3/4      REV 08   750-034978   EN1947            F2S SIB 3D
  B Board        REV 02   711-034979   EN1471            F2S SIB 3D Mezz
Fan Tray 0       REV 10   760-024497   EH3313            Front Fan Tray
Fan Tray 1       REV 10   760-024497   EH3290            Front Fan Tray
Fan Tray 2       REV 10   760-024502   EH3292            Rear Fan Tray
Fan Tray 3       REV 10   760-024502   EH3287            Rear Fan Tray
Fan Tray 4       REV 10   760-024502   EH3286            Rear Fan Tray
Fan Tray 5       REV 10   760-024502   EH3285            Rear Fan Tray

lcc0-re0:
--------------------------------------------------------------------------
Hardware inventory:
Item             Version  Part number  Serial number     Description
Chassis                                JN11B23FEAHA      T1600
Midplane         REV 01   710-027486   RC9787            T-series Backplane
FPM GBUS         REV 13   710-002901   BBAG5132          T640 FPM Board
FPM Display      REV 04   710-021387   BBAL9612          T1600 FPM Display
CIP              REV 06   710-002895   BBAN0605          T-series CIP
PEM 0            REV 05   740-036442   1G022060143       Power Entry Module 6x60
PEM 1            REV 05   740-036442   1G022060011       Power Entry Module 6x60
SCG 0            REV 18   710-003423   BBAL7318          T640 Sonet Clock Gen.
SCG 1            REV 18   710-003423   BBAL7255          T640 Sonet Clock Gen.
Routing Engine 0 REV 07   740-026941   P737F-002933      RE-DUO-1800
Routing Engine 1 REV 06   740-026941   P737F-002749      RE-DUO-1800
CB 0             REV 11   710-022597   EH3611            LCC Control Board
CB 1             REV 11   710-022597   EH4798            LCC Control Board
FPC 5            REV 17   710-013037   BBAC5333          FPC Type 4-ES
  CPU            REV 10   710-016744   BBAB7619          ST-PMB2
  PIC 0          REV 18   750-017405   BBAE3420          4x 10GE (LAN/WAN) XFP
    Xcvr 0       REV 03   740-014289   T10C90659         XFP-10G-SR
  MMB 0          REV 05   710-025563   BBAB9538          ST-MMB2
  MMB 1          REV 05   710-025563   BBAB9502          ST-MMB2
```

```
FPC 7            REV 01   750-045173   BBAV0032          FPC Type 5-3D
  CPU
SPMB 0           REV 05   710-023321   EG9434            LCC Switch CPU
SPMB 1           REV 05   710-023321   EH3878            LCC Switch CPU
SIB 0            REV 01   750-041657   EH7997            LCC SIB 3D
  B Board        REV 01   711-042424   EH7674            LCC SIB 3D Mezz
  Xcvr 0         REV 01   740-047547   XB48FB014         CXP Module
  Xcvr 2         REV 01   740-047547   XB48FB05A         CXP Module
  Xcvr 4         REV 01   740-047547   XB48FB052         CXP Module
  Xcvr 6         REV 01   740-047547   XB48FB01B         CXP Module
SIB 1            REV 01   750-041657   EH8023            LCC SIB 3D
  B Board        REV 01   711-042424   EH7659            LCC SIB 3D Mezz
  Xcvr 0         REV 01   740-047547   XB48FB05J         CXP Module
  Xcvr 2         REV 01   740-047547   XB48FB01E         CXP Module
  Xcvr 4         REV 01   740-047547   XB48FB01J         CXP Module
  Xcvr 6         REV 01   740-047547   XB48FB02S         CXP Module
SIB 2            REV 03   750-041657   EJ6554            LCC SIB 3D
  B Board        REV 02   711-042424   EJ5756            LCC SIB 3D Mezz
  Xcvr 0         REV 01   740-047547   XB34FB01Z         CXP Module
  Xcvr 2         REV 01   740-047547   XB34FB013         CXP Module
  Xcvr 4         REV 01   740-047547   XB48FB04Z         CXP Module
  Xcvr 6         REV 01   740-047547   XB48FB05N         CXP Module
Fan Tray 0                                               Front Top Fan Tray
Fan Tray 1                                               Front Bottom Fan Tray
Fan Tray 2                                               Rear Fan Tray -- Rev 4

lcc2-re0:
--------------------------------------------------------------------------
Hardware inventory:
Item             Version  Part number  Serial number     Description
Chassis                                JN11B3975AHA      T1600
Midplane         REV 01   710-027486   RC9826            T-series Backplane
FPM GBUS         REV 13   710-002901   BBAG5124          T640 FPM Board
FPM Display      REV 03   710-021387   BBAJ1112          T1600 FPM Display
CIP              REV 06   710-002895   BBAL3744          T-series CIP
PEM 0            REV 05   740-036442   1G022060081       Power Entry Module 6x60
PEM 1            REV 05   740-036442   1G022060188       Power Entry Module 6x60
SCG 0            REV 18   710-003423   BBAH8775          T640 Sonet Clock Gen.
SCG 1            REV 18   710-003423   BBAL7272          T640 Sonet Clock Gen.
Routing Engine 0 REV 07   740-026941   P737F-002992      RE-DUO-1800
Routing Engine 1 REV 07   740-026941   P737F-002938      RE-DUO-1800
CB 0             REV 11   710-022597   EH4805            LCC Control Board
CB 1             REV 11   710-022597   EH4786            LCC Control Board
FPC 1            REV 01   710-033873   BBAH0320          FPC Type 3-ES
  CPU            REV 11   710-016744   BBAF3281          ST-PMB2
  MMB 0          REV 06   710-025563   BBAF5061          ST-MMB2
FPC 5            REV 04   710-033871   BBAM5070          FPC Type 4-ES
  CPU            REV 11   710-016744   BBAM6653          ST-PMB2
  PIC 1          REV 20   750-017405   BBAM1296          4x 10GE (LAN/WAN) XFP
    Xcvr 0       REV 03   740-014289   T10B42981         XFP-10G-SR
  MMB 0          REV 07   710-025563   BBAN2631          ST-MMB2
  MMB 1          REV 07   710-025563   BBAN2538          ST-MMB2
SPMB 0           REV 05   710-023321   EH3903            LCC Switch CPU
SPMB 1           REV 05   710-023321   EH3902            LCC Switch CPU
SIB 0            REV 01   750-041657   EH8019            LCC SIB 3D
  B Board        REV 01   711-042424   EH7680            LCC SIB 3D Mezz
  Xcvr 0         REV 01   740-047547   XB48FB04F         CXP Module
  Xcvr 2         REV 01   740-047547   XB48FB04S         CXP Module
  Xcvr 4         REV 01   740-047547   XB48FB04B         CXP Module
  Xcvr 6         REV 01   740-047547   XB48FB043         CXP Module
SIB 1            REV 01   750-041657   EH8012            LCC SIB 3D
```

```
  B Board        REV 01   711-042424   EH7658            LCC SIB 3D Mezz
  Xcvr 0         REV 01   740-047547   XB48FB05E         CXP Module
  Xcvr 2         REV 01   740-047547   XB48FB01Z         CXP Module
  Xcvr 4         REV 01   740-047547   XB48FB018         CXP Module
  Xcvr 6         REV 01   740-047547   XB48FB054         CXP Module
SIB 2            REV 01   750-041657   EH7993            LCC SIB 3D
  B Board        REV 01   711-042424   EH7678            LCC SIB 3D Mezz
  Xcvr 0         REV 01   740-047547   XB48FB05C         CXP Module
  Xcvr 2         REV 01   740-047547   XB47FB00N         CXP Module
  Xcvr 4         REV 01   740-047547   XB48FB05U         CXP Module
  Xcvr 6         REV 01   740-047547   XB48FB05L         CXP Module
Fan Tray 0                                               Front Top Fan Tray
Fan Tray 1                                               Front Bottom Fan Tray
Fan Tray 2                                               Rear Fan Tray -- Rev 4
```

show chassis hardware clei-models (TX Matrix Plus Router with 3D SIBs)

```
user@host> show chassis hardware clei-models
sfc0-re0:
--------------------------------------------------------------------------
Hardware inventory:
Item             Version  Part number  CLEI code         FRU model number
Midplane         REV 05   710-022574                     CHAS-BP-TXP-S
FPM Display      REV 09   710-024027                     CRAFT-TXP-S
CIP 0            REV 12   710-023792                     CIP-TXP-S
CIP 1            REV 12   710-023792                     CIP-TXP-S
PEM 0            Rev 06   740-027463   IPUPAFGKTA        PWR-TXP-7-60-DC-S
Routing Engine 0 REV 07   740-026942                     RE-DUO-C2600-16G-S
Routing Engine 1 REV 07   740-026942                     RE-DUO-C2600-16G-S
CB 0             REV 13   710-022606                     CB-TXP-S
CB 1             REV 14   710-022606                     CB-TXP-S
SIB F13 0        REV 10   750-035002   PROTOXCLEI        SIB-TXP-3D-F13-S
  Xcvr 0         REV 01   740-048813
  Xcvr 1         REV 01   740-048813
  Xcvr 2         REV 01   740-048813
  Xcvr 3         REV 01   740-048813
  Xcvr 4         REV 01   740-048813
  Xcvr 5         REV 01   740-048813
  Xcvr 6         REV 01   740-048813
  Xcvr 7         REV 01   740-048813
  Xcvr 8         REV 01   740-047547                     CXP-TXP-3D
  Xcvr 10        REV 01   740-047547                     CXP-TXP-3D
  Xcvr 12        REV 01   740-047547                     CXP-TXP-3D
  Xcvr 14        REV 01   740-047547                     CXP-TXP-3D
SIB F13 1        REV 10   750-035002   PROTOXCLEI        SIB-TXP-3D-F13-S
  Xcvr 0         REV 01   740-047547                     CXP-TXP-3D
  Xcvr 1         REV 01   740-047547                     CXP-TXP-3D
  Xcvr 2         REV 01   740-047547                     CXP-TXP-3D
  Xcvr 3         REV 01   740-047547                     CXP-TXP-3D
  Xcvr 4         REV 01   740-047547                     CXP-TXP-3D
  Xcvr 5         REV 01   740-047547                     CXP-TXP-3D
  Xcvr 6         REV 01   740-047547                     CXP-TXP-3D
  Xcvr 7         REV 01   740-047547                     CXP-TXP-3D
  Xcvr 8         REV 01   740-047547                     CXP-TXP-3D
  Xcvr 10        REV 01   740-047547                     CXP-TXP-3D
  Xcvr 12        REV 01   740-047547                     CXP-TXP-3D
  Xcvr 14        REV 01   740-047547                     CXP-TXP-3D
  Xcvr 0         REV 01   740-048813
  Xcvr 1         REV 01   740-048813
  Xcvr 2         REV 01   740-048813
  Xcvr 3         REV 01   740-048813
```

```
  Xcvr 4         REV 01   740-048813
  Xcvr 5         REV 01   740-048813
  Xcvr 6         REV 01   740-048813
  Xcvr 7         REV 01   740-048813
  Xcvr 8         REV 01   740-048813
  Xcvr 10        REV 01   740-048813
  Xcvr 12        REV 01   740-048813
  Xcvr 14        REV 01   740-048813
  Xcvr 0         REV 01   740-047547                    CXP-TXP-3D
  Xcvr 1         REV 01   740-047547                    CXP-TXP-3D
  Xcvr 2         REV 01   740-047547                    CXP-TXP-3D
  Xcvr 3         REV 01   740-047547                    CXP-TXP-3D
  Xcvr 4         REV 01   740-047547                    CXP-TXP-3D
  Xcvr 5         REV 01   740-047547                    CXP-TXP-3D
  Xcvr 6         REV 01   740-047547                    CXP-TXP-3D
  Xcvr 7         REV 01   740-047547                    CXP-TXP-3D
  Xcvr 8         REV 01   740-047547                    CXP-TXP-3D
  Xcvr 10        REV 01   740-047547                    CXP-TXP-3D
  Xcvr 12        REV 01   740-047547                    CXP-TXP-3D
  Xcvr 14        REV 01   740-047547                    CXP-TXP-3D
SIB F13 6        REV 16   750-035002   PROTOXCLEI       SIB-TXP-3D-F13
  Xcvr 0         REV 01   740-048813
  Xcvr 1         REV 01   740-048813
  Xcvr 2         REV 01   740-048813
  Xcvr 3         REV 01   740-048813
  Xcvr 4         REV 01   740-048813
  Xcvr 5         REV 01   740-048813
  Xcvr 6         REV 01   740-048813
  Xcvr 7         REV 01   740-048813
  Xcvr 8         REV 01   740-047547                    CXP-TXP-3D
  Xcvr 10        REV 01   740-047547                    CXP-TXP-3D
  Xcvr 12        REV 01   740-047547                    CXP-TXP-3D
  Xcvr 14        REV 01   740-047547                    CXP-TXP-3D
SIB F13 7        REV 10   750-035002   PROTOXCLEI       SIB-TXP-3D-F13-S
  Xcvr 0         REV 01   740-047547                    CXP-TXP-3D
  Xcvr 1         REV 01   740-047547                    CXP-TXP-3D
  Xcvr 2         REV 01   740-047547                    CXP-TXP-3D
  Xcvr 3         REV 01   740-047547                    CXP-TXP-3D
  Xcvr 4         REV 01   740-047547                    CXP-TXP-3D
  Xcvr 5         REV 01   740-047547                    CXP-TXP-3D
  Xcvr 6         REV 01   740-047547                    CXP-TXP-3D
  Xcvr 7         REV 01   740-047547                    CXP-TXP-3D
  Xcvr 8         REV 01   740-047547                    CXP-TXP-3D
  Xcvr 10        REV 01   740-047547                    CXP-TXP-3D
  Xcvr 12        REV 01   740-047547                    CXP-TXP-3D
  Xcvr 14        REV 01   740-047547                    CXP-TXP-3D
  Xcvr 0         REV 01   740-048813
  Xcvr 1         REV 01   740-048813
  Xcvr 2         REV 01   740-048813
  Xcvr 3         REV 01   740-048813
  Xcvr 4         REV 01   740-048813
  Xcvr 5         REV 01   740-047547                    CXP-TXP-3D
  Xcvr 6         REV 01   740-047547                    CXP-TXP-3D
  Xcvr 7         REV 01   740-047547                    CXP-TXP-3D
  Xcvr 8         REV 01   740-047547                    CXP-TXP-3D
  Xcvr 10        REV 01   740-047547                    CXP-TXP-3D
  Xcvr 12        REV 01   740-047547                    CXP-TXP-3D
  Xcvr 14        REV 01   740-047547                    CXP-TXP-3D
SIB F13 9        REV 16   750-035002   PROTOXCLEI       SIB-TXP-3D-F13
  Xcvr 0         REV 01   740-047547                    CXP-TXP-3D
  Xcvr 1         REV 01   740-047547                    CXP-TXP-3D
```

```
  Xcvr 2         REV 01   740-047547                     CXP-TXP-3D
  Xcvr 3         REV 01   740-047547                     CXP-TXP-3D
  Xcvr 4         REV 01   740-047547                     CXP-TXP-3D
  Xcvr 5         REV 01   740-047547                     CXP-TXP-3D
  Xcvr 6         REV 01   740-047547                     CXP-TXP-3D
  Xcvr 7         REV 01   740-047547                     CXP-TXP-3D
  Xcvr 8         REV 01   740-047547                     CXP-TXP-3D
  Xcvr 10        REV 01   740-047547                     CXP-TXP-3D
  Xcvr 12        REV 01   740-047547                     CXP-TXP-3D
  Xcvr 14        REV 01   740-047547                     CXP-TXP-3D
SIB F13 11       REV 10   750-035002   PROTOXCLEI        750-035002
  Xcvr 0         REV 01   740-048813
  Xcvr 1         REV 01   740-048813
  Xcvr 2         REV 01   740-048813
  Xcvr 3         REV 01   740-048813
  Xcvr 4         REV 01   740-048813
  Xcvr 5         REV 01   740-048813
  Xcvr 6         REV 01   740-047547                     CXP-TXP-3D
  Xcvr 7         REV 01   740-048813
  Xcvr 8         REV 01   740-047547                     CXP-TXP-3D
  Xcvr 12        REV 01   740-047547                     CXP-TXP-3D
  Xcvr 14        REV 01   740-047547                     CXP-TXP-3D
SIB F13 12       REV 16   750-035002   PROTOXCLEI        SIB-TXP-3D-F13
  Xcvr 0         REV 01   740-047547                     CXP-TXP-3D
  Xcvr 1         REV 01   740-047547                     CXP-TXP-3D
  Xcvr 2         REV 01   740-047547                     CXP-TXP-3D
  Xcvr 3         REV 01   740-047547                     CXP-TXP-3D
  Xcvr 4         REV 01   740-047547                     CXP-TXP-3D
  Xcvr 5         REV 01   740-047547                     CXP-TXP-3D
  Xcvr 6         REV 01   740-047547                     CXP-TXP-3D
  Xcvr 7         REV 01   740-047547                     CXP-TXP-3D
  Xcvr 8         REV 01   740-047547                     CXP-TXP-3D
  Xcvr 10        REV 01   740-047547                     CXP-TXP-3D
  Xcvr 12        REV 01   740-047547                     CXP-TXP-3D
  Xcvr 14        REV 01   740-047547                     CXP-TXP-3D
SIB F2S 0/0      REV 06   750-034978   PROTOXCLEI        SIB-TXP-3D-F2S
SIB F2S 0/2      REV 07   750-034978   PROTOXCLEI        SIB-TXP-3D-F2S
SIB F2S 0/4      REV 06   750-034978   PROTOXCLEI        SIB-TXP-3D-F2S
SIB F2S 0/6      REV 06   750-034978   PROTOXCLEI        SIB-TXP-3D-F2S
SIB F2S 1/0      REV 07   750-034978   PROTOXCLEI        SIB-TXP-3D-F2S
SIB F2S 1/2      REV 07   750-034978   PROTOXCLEI        SIB-TXP-3D-F2S
SIB F2S 1/4      REV 07   750-034978   PROTOXCLEI        SIB-TXP-3D-F2S
SIB F2S 1/6      REV 08   750-034978   PROTOXCLEI        SIB-TXP-3D-F2S
SIB F2S 2/0      REV 06   750-034978   PROTOXCLEI        SIB-TXP-3D-F2S
SIB F2S 2/2      REV 06   750-034978   PROTOXCLEI        SIB-TXP-3D-F2S
SIB F2S 2/4      REV 07   750-034978   PROTOXCLEI        SIB-TXP-3D-F2S
SIB F2S 2/6      REV 06   750-034978   PROTOXCLEI        SIB-TXP-3D-F2S
SIB F2S 3/0      REV 07   750-034978   PROTOXCLEI        SIB-TXP-3D-F2S
SIB F2S 3/2      REV 06   750-034978   PROTOXCLEI        SIB-TXP-3D-F2S
SIB F2S 3/4      REV 06   750-034978   PROTOXCLEI        SIB-TXP-3D-F2S
SIB F2S 3/6      REV 06   750-034978   PROTOXCLEI        SIB-TXP-3D-F2S
SIB F2S 4/0      REV 07   750-034978   PROTOXCLEI        SIB-TXP-3D-F2S
SIB F2S 4/2      REV 06   750-034978   PROTOXCLEI        SIB-TXP-3D-F2S
SIB F2S 4/4      REV 06   750-034978   PROTOXCLEI        SIB-TXP-3D-F2S
SIB F2S 4/6      REV 06   750-034978   PROTOXCLEI        SIB-TXP-3D-F2S
Fan Tray 0       REV 10   760-024497                     FANTRAY-TXP-H-S
Fan Tray 1       REV 10   760-024497                     FANTRAY-TXP-H-S
Fan Tray 2       REV 10   760-024502                     FANTRAY-TXP-V-S
Fan Tray 3       REV 10   760-024502                     FANTRAY-TXP-V-S
Fan Tray 4       REV 10   760-024502                     FANTRAY-TXP-V-S
Fan Tray 5       REV 10   760-024502                     FANTRAY-TXP-V-S
```

```
lcc0-re0:
--------------------------------------------------------------------------
Hardware inventory:
Item             Version  Part number  CLEI code         FRU model number
Midplane         REV 01   710-027486   IPMJ700DRD        CHAS-BP-T1600-S
FPM Display      REV 04   710-021387                      CRAFT-T1600-S
CIP              REV 06   710-002895                      CIP-L-T640-S
PEM 0            REV 05   740-036442   IPUPAG6KAA        PWR-T-6-60-DC-S
PEM 1            REV 05   740-036442   IPUPAG6KAA        PWR-T-6-60-DC-S
SCG 0            REV 18   710-003423                      SCG-T-S
SCG 1            REV 18   710-003423                      SCG-T-S
Routing Engine 0 REV 10   740-026941                      RE-DUO-C1800-8G-S
Routing Engine 1 REV 07   740-026941                      RE-DUO-C1800-8G-S
CB 0             REV 11   710-022597                      CB-LCC-S
CB 1             REV 11   710-022597                      CB-LCC-S
FPC 0            REV 01   750-045173   IP9IAL4DAB        T4000-FPC5-3D
  PIC 0          REV 17   750-034624   IP9IAL2DAA        PF-12XGE-SFPP
  PIC 1          REV 17   750-034624   IP9IAL2DAA        PF-12XGE-SFPP
FPC 3            REV 01   750-045173   IP9IAL4DAB        T4000-FPC5-3D
  PIC 0          REV 13   750-033423   XXXXXXXXDD        PF-12-24XGE-SFPP
FPC 4            REV 02   750-045173   IP9IAL4DAC        T4000-FPC5-3D
  PIC 0          REV 17   750-034624   IP9IAL2DAA        PF-12XGE-SFPP
  PIC 1          REV 17   750-034624   IP9IAL2DAA        PF-12XGE-SFPP
FPC 5            REV 01   750-045173   IP9IAL4DAB        T4000-FPC5-3D
  PIC 0          REV 17   750-034624   IP9IAL2DAA        PF-12XGE-SFPP
  PIC 1          REV 17   750-034624   IP9IAL2DAA        PF-12XGE-SFPP
FPC 6            REV 01   750-045173   IP9IAL4DAB        T4000-FPC5-3D
  PIC 0          REV 17   750-034624   IP9IAL2DAA        PF-12XGE-SFPP
  PIC 1          REV 10   750-035293   IP9IAL3DAA        PF-1CGE-CFP
SIB 0            REV 06   750-041657   PROTOXCLEI        SIB-TXP-3D-LCC
  Xcvr 0         REV 01   740-048813
  Xcvr 1         REV 01   740-048813
  Xcvr 2         REV 01   740-048813
  Xcvr 3         REV 01   740-048813
  Xcvr 4         REV 01   740-048813
  Xcvr 5         REV 01   740-048813
  Xcvr 6         REV 01   740-048813
  Xcvr 7         REV 01   740-048813
SIB 1            REV 06   750-041657   PROTOXCLEI        SIB-TXP-3D-LCC
  Xcvr 0         REV 01   740-048813
  Xcvr 1         REV 01   740-048813
  Xcvr 2         REV 01   740-048813
  Xcvr 3         REV 01   740-048813
  Xcvr 4         REV 01   740-048813
  Xcvr 5         REV 01   740-048813
  Xcvr 6         REV 01   740-048813
  Xcvr 7         REV 01   740-048813
SIB 2            REV 06   750-041657   PROTOXCLEI        SIB-TXP-3D-LCC
  Xcvr 0         REV 01   740-048813
  Xcvr 1         REV 01   740-048813
  Xcvr 2         REV 01   740-048813
  Xcvr 3         REV 01   740-048813
  Xcvr 4         REV 01   740-048813
  Xcvr 5         REV 01   740-048813
  Xcvr 6         REV 01   740-048813
  Xcvr 7         REV 01   740-048813
SIB 3            REV 07   750-041657   PROTOXCLEI        SIB-TXP-3D-LLC
  Xcvr 0         REV 01   740-048813
  Xcvr 1         REV 01   740-048813
  Xcvr 2         REV 01   740-048813
```

```
  Xcvr 3         REV 01   740-048813
  Xcvr 4         REV 01   740-048813
  Xcvr 5         REV 01   740-048813
  Xcvr 6         REV 01   740-048813
  Xcvr 7         REV 01   740-048813
SIB 4            REV 06   750-041657   PROTOXCLEI        SIB-TXP-3D-LCC
  Xcvr 0         REV 01   740-048813
  Xcvr 1         REV 01   740-048813
  Xcvr 2         REV 01   740-048813
  Xcvr 3         REV 01   740-048813
  Xcvr 4         REV 01   740-048813
  Xcvr 5         REV 01   740-048813
  Xcvr 6         REV 01   740-048813
  Xcvr 7         REV 01   740-048813
Fan Tray 0                                            FANTRAY-T-S
Fan Tray 1                                            FANTRAY-T-S
Fan Tray 2                                            FANTRAY-TXP3D-LCC-R-S
[Output Truncated]
```

show chassis hardware detail (TX Matrix Plus Router with 3D SIBs)

```
user@host> show chassis hardware detail
sfc0-re0:
--------------------------------------------------------------------------
Hardware inventory:
Item             Version  Part number  Serial number     Description
Chassis                                JN11CAAA4AHB      TXP
Midplane         REV 05   710-022574   ABAC4696          SFC Midplane
FPM Display      REV 09   710-024027   EH3138            TXP FPM Display
CIP 0            REV 12   710-023792   EF6349            TXP CIP
CIP 1            REV 12   710-023792   EG5294            TXP CIP
PEM 0            Rev 06   740-027463   XH04595           Power Entry Module
PEM 1            Rev 06   740-027463   XH04592           Power Entry Module
Routing Engine 0 REV 07   740-026942   P737A-002541      RE-DUO-2600
  ad0    3823 MB  SMART CF             2011030400062C132C13 Compact Flash
  ad1   62720 MB  SMART Lite SATA Drive 201105100009A452A452 Disk 1
Routing Engine 1 REV 07   740-026942   P737A-002602      RE-DUO-2600
  ad0    3823 MB  SMART CF             20110508085EE471E471 Compact Flash
  ad1   62720 MB  SMART Lite SATA Drive 201110210089DF39DF39 Disk 1
CB 0             REV 15   710-022606   EH4376            SFC Control Board
CB 1             REV 15   710-022606   EH4379            SFC Control Board
SPMB 0                    BUILTIN                        SFC Switch CPU
SPMB 1                    BUILTIN                        SFC Switch CPU
SIB F13 0        REV 10   750-035002   EM9305            F13 SIB 3D
  B Board        REV 06   711-035082   EM9667            F13 SIB 3D Mezz
  P Board        REV 05   711-043544   EM9708            F13 SIB 3D Power
  Xcvr 0         REV 01   740-047547   XB34FB00S         CXP Module
  Xcvr 2         REV 01   740-047547   XB48FB01H         CXP Module
  Xcvr 4         REV 01   740-047547   XB34FB02W         CXP Module
  Xcvr 6         REV 01   740-047547   XB34FB01T         CXP Module
  Xcvr 8         REV 01   740-047547   XB48FB00W         CXP Module
  Xcvr 10        REV 01   740-047547   XB34FB01S         CXP Module
  Xcvr 12        REV 01   740-047547   XB34FB03H         CXP Module
  Xcvr 14        REV 01   740-047547   XB34FB023         CXP Module
SIB F13 3        REV 01   710-035001   EJ2612            F13 SIB 3D
  B Board        REV 01   711-035082   EJ3815            F13 SIB 3D Mezz
  P Board        REV 01   711-043544   EJ2678            F13 SIB 3D Power
  Xcvr 0         REV 01   740-047547   XB48FB04C         CXP Module
  Xcvr 2         REV 01   740-047547   XB48FB00Z         CXP Module
  Xcvr 4         REV 01   740-047547   XB47FB036         CXP Module
  Xcvr 6         REV 01   740-047547   XB47FB029         CXP Module
```

```
  Xcvr 8         REV 01   740-047547   XB48FB02N         CXP Module
  Xcvr 10        REV 01   740-047547   XB42FB0CS         CXP Module
  Xcvr 12        REV 01   740-047547   XB47FB01X         CXP Module
  Xcvr 14        REV 01   740-047547   XB48FB02F         CXP Module
SIB F13 6        REV 05   750-035002   EK2675            F13 SIB 3D
  B Board        REV 03   711-035082   EK2612            F13 SIB 3D Mezz
  P Board        REV 04   711-043544   EK1179            F13 SIB 3D Power
  Xcvr 0         REV 01   740-047547   XB48FB01T         CXP Module
  Xcvr 2         REV 01   740-047547   XB48FB02M         CXP Module
  Xcvr 4         REV 01   740-047547   XB48FB031         CXP Module
  Xcvr 6         REV 01   740-047547   XB48FB04P         CXP Module
  Xcvr 8         REV 01   740-047547   XB48FB02T         CXP Module
  Xcvr 10        REV 01   740-047547   XB34FB01V         CXP Module
  Xcvr 12        REV 01   740-047547   XB48FB02C         CXP Module
  Xcvr 14                 NON-JNPR                       No Module
SIB F13 12       REV 01   710-035001   EJ2631            F13 SIB 3D
  B Board        REV 01   711-035082   EJ3808            F13 SIB 3D Mezz
  P Board        REV 01   711-043544   EJ2676            F13 SIB 3D Power
SIB F2S 0/0      REV 01   711-034977   EH9829            F2S SIB 3D
  B Board        REV 01   711-034979   EH9927            F2S SIB 3D Mezz
SIB F2S 0/2      REV 01   711-034977   EH9791            F2S SIB 3D
  B Board        REV 01   711-034979   EH9852            F2S SIB 3D Mezz
SIB F2S 0/4      REV 01   711-034977   EH9803            F2S SIB 3D
  B Board        REV 01   711-034979   EH9915            F2S SIB 3D Mezz
SIB F2S 0/6      REV 01   711-034977   EH9763            F2S SIB 3D
  B Board        REV 01   711-034979   EH9880            F2S SIB 3D Mezz
SIB F2S 1/0      REV 01   711-034977   EH9757            F2S SIB 3D
  B Board        REV 01   711-034979   EH9889            F2S SIB 3D Mezz
SIB F2S 1/2      REV 01   711-034977   EH9815            F2S SIB 3D
  B Board        REV 01   711-034979   EH9890            F2S SIB 3D Mezz
SIB F2S 1/4      REV 08   750-034978   EN1954            F2S SIB 3D
  B Board        REV 02   711-034979   EN1436            F2S SIB 3D Mezz
SIB F2S 1/6      REV 01   711-034977   EJ7054            F2S SIB 3D
  B Board        REV 01   711-034979   EJ8238            F2S SIB 3D Mezz
SIB F2S 2/0      REV 01   711-034977   EH9830            F2S SIB 3D
  B Board        REV 01   711-034979   EH9844            F2S SIB 3D Mezz
SIB F2S 2/2      REV 01   711-034977   EH9818            F2S SIB 3D
  B Board        REV 01   711-034979   EH9888            F2S SIB 3D Mezz
SIB F2S 2/4      REV 01   711-034977   EH9795            F2S SIB 3D
  B Board        REV 01   711-034979   EH9869            F2S SIB 3D Mezz
SIB F2S 2/6      REV 01   711-034977   EJ7026            F2S SIB 3D
  B Board        REV 01   711-034979   EJ8273            F2S SIB 3D Mezz
SIB F2S 3/0      REV 01   711-034977   EH9811            F2S SIB 3D
  B Board        REV 01   711-034979   EH9892            F2S SIB 3D Mezz
SIB F2S 3/2      REV 01   711-034977   EH9812            F2S SIB 3D
  B Board        REV 01   711-034979   EH9877            F2S SIB 3D Mezz
SIB F2S 3/4      REV 08   750-034978   EN1947            F2S SIB 3D
  B Board        REV 02   711-034979   EN1471            F2S SIB 3D Mezz
Fan Tray 0       REV 10   760-024497   EH3313            Front Fan Tray
Fan Tray 1       REV 10   760-024497   EH3290            Front Fan Tray
Fan Tray 2       REV 10   760-024502   EH3292            Rear Fan Tray
Fan Tray 3       REV 10   760-024502   EH3287            Rear Fan Tray
Fan Tray 4       REV 10   760-024502   EH3286            Rear Fan Tray
Fan Tray 5       REV 10   760-024502   EH3285            Rear Fan Tray

lcc0-re0:
--------------------------------------------------------------------------
Hardware inventory:
Item             Version  Part number  Serial number     Description
Chassis                                JN11B23FEAHA      T1600
Midplane         REV 01   710-027486   RC9787            T-series Backplane
```

```
FPM GBUS         REV 13   710-002901   BBAG5132          T640 FPM Board
FPM Display      REV 04   710-021387   BBAL9612          T1600 FPM Display
CIP              REV 06   710-002895   BBAN0605          T-series CIP
PEM 0            REV 05   740-036442   1G022060143       Power Entry Module 6x60
PEM 1            REV 05   740-036442   1G022060011       Power Entry Module 6x60
SCG 0            REV 18   710-003423   BBAL7318          T640 Sonet Clock Gen.
SCG 1            REV 18   710-003423   BBAL7255          T640 Sonet Clock Gen.
Routing Engine 0 REV 07   740-026941   P737F-002933      RE-DUO-1800
  ad0    3823 MB  SMART CF             201103030490604E604E Compact Flash
  ad1   62720 MB  SMART Lite SATA Drive 20110729028B11D411D4 Disk 1
Routing Engine 1 REV 06   740-026941   P737F-002749      RE-DUO-1800
  ad0    3823 MB  SMART CF             2011010504EB99649964 Compact Flash
  ad1   62720 MB  SMART Lite SATA Drive 201102140058934A934A Disk 1
CB 0             REV 11   710-022597   EH3611            LCC Control Board
CB 1             REV 11   710-022597   EH4798            LCC Control Board
FPC 5            REV 17   710-013037   BBAC5333          FPC Type 4-ES
  CPU            REV 10   710-016744   BBAB7619          ST-PMB2
  PIC 0          REV 18   750-017405   BBAE3420          4x 10GE (LAN/WAN) XFP
    Xcvr 0       REV 03   740-014289   T10C90659         XFP-10G-SR
  MMB 0          REV 05   710-025563   BBAB9538          ST-MMB2
  MMB 1          REV 05   710-025563   BBAB9502          ST-MMB2
FPC 7            REV 01   750-045173   BBAV0032          FPC Type 5-3D
  CPU
SPMB 0           REV 05   710-023321   EG9434            LCC Switch CPU
SPMB 1           REV 05   710-023321   EH3878            LCC Switch CPU
SIB 0            REV 01   750-041657   EH7997            LCC SIB 3D
  B Board        REV 01   711-042424   EH7674            LCC SIB 3D Mezz
  Xcvr 0         REV 01   740-047547   XB48FB014         CXP Module
  Xcvr 2         REV 01   740-047547   XB48FB05A         CXP Module
  Xcvr 4         REV 01   740-047547   XB48FB052         CXP Module
  Xcvr 6         REV 01   740-047547   XB48FB01B         CXP Module
SIB 1            REV 01   750-041657   EH8023            LCC SIB 3D
  B Board        REV 01   711-042424   EH7659            LCC SIB 3D Mezz
  Xcvr 0         REV 01   740-047547   XB48FB05J         CXP Module
  Xcvr 2         REV 01   740-047547   XB48FB01E         CXP Module
  Xcvr 4         REV 01   740-047547   XB48FB01J         CXP Module
  Xcvr 6         REV 01   740-047547   XB48FB02S         CXP Module
SIB 2            REV 03   750-041657   EJ6554            LCC SIB 3D
  B Board        REV 02   711-042424   EJ5756            LCC SIB 3D Mezz
  Xcvr 0         REV 01   740-047547   XB34FB01Z         CXP Module
  Xcvr 2         REV 01   740-047547   XB34FB013         CXP Module
  Xcvr 4         REV 01   740-047547   XB48FB04Z         CXP Module
  Xcvr 6         REV 01   740-047547   XB48FB05N         CXP Module
Fan Tray 0                                               Front Top Fan Tray
Fan Tray 1                                               Front Bottom Fan Tray
Fan Tray 2                                               Rear Fan Tray -- Rev 4

lcc2-re0:
--------------------------------------------------------------------------
Hardware inventory:
Item             Version  Part number  Serial number     Description
Chassis                                JN11B3975AHA      T1600
Midplane         REV 01   710-027486   RC9826            T-series Backplane
FPM GBUS         REV 13   710-002901   BBAG5124          T640 FPM Board
FPM Display      REV 03   710-021387   BBAJ1112          T1600 FPM Display
CIP              REV 06   710-002895   BBAL3744          T-series CIP
PEM 0            REV 05   740-036442   1G022060081       Power Entry Module 6x60
PEM 1            REV 05   740-036442   1G022060188       Power Entry Module 6x60
SCG 0            REV 18   710-003423   BBAH8775          T640 Sonet Clock Gen.
SCG 1            REV 18   710-003423   BBAL7272          T640 Sonet Clock Gen.
Routing Engine 0 REV 07   740-026941   P737F-002992      RE-DUO-1800
```

```
  ad0    3823 MB  SMART CF             201103030356329E329E Compact Flash
  ad1   62720 MB  SMART Lite SATA Drive 2011051000488D8B8D8B Disk 1
Routing Engine 1 REV 07   740-026941   P737F-002938      RE-DUO-1800
  ad0    3823 MB  SMART CF             20110304000F02680268 Compact Flash
  ad1   62720 MB  SMART Lite SATA Drive 201105300A70F325F325 Disk 1
CB 0             REV 11   710-022597   EH4805            LCC Control Board
CB 1             REV 11   710-022597   EH4786            LCC Control Board
FPC 1            REV 01   710-033873   BBAH0320          FPC Type 3-ES
  CPU            REV 11   710-016744   BBAF3281          ST-PMB2
  MMB 0          REV 06   710-025563   BBAF5061          ST-MMB2
FPC 5            REV 04   710-033871   BBAM5070          FPC Type 4-ES
  CPU            REV 11   710-016744   BBAM6653          ST-PMB2
  PIC 1          REV 20   750-017405   BBAM1296          4x 10GE (LAN/WAN) XFP
    Xcvr 0       REV 03   740-014289   T10B42981         XFP-10G-SR
  MMB 0          REV 07   710-025563   BBAN2631          ST-MMB2
  MMB 1          REV 07   710-025563   BBAN2538          ST-MMB2
SPMB 0           REV 05   710-023321   EH3903            LCC Switch CPU
SPMB 1           REV 05   710-023321   EH3902            LCC Switch CPU
SIB 0            REV 01   750-041657   EH8019            LCC SIB 3D
  B Board        REV 01   711-042424   EH7680            LCC SIB 3D Mezz
  Xcvr 0         REV 01   740-047547   XB48FB04F         CXP Module
  Xcvr 2         REV 01   740-047547   XB48FB04S         CXP Module
  Xcvr 4         REV 01   740-047547   XB48FB04B         CXP Module
  Xcvr 6         REV 01   740-047547   XB48FB043         CXP Module
SIB 1            REV 01   750-041657   EH8012            LCC SIB 3D
  B Board        REV 01   711-042424   EH7658            LCC SIB 3D Mezz
  Xcvr 0         REV 01   740-047547   XB48FB05E         CXP Module
  Xcvr 2         REV 01   740-047547   XB48FB01Z         CXP Module
  Xcvr 4         REV 01   740-047547   XB48FB018         CXP Module
  Xcvr 6         REV 01   740-047547   XB48FB054         CXP Module
SIB 2            REV 01   750-041657   EH7993            LCC SIB 3D
  B Board        REV 01   711-042424   EH7678            LCC SIB 3D Mezz
  Xcvr 0         REV 01   740-047547   XB48FB05C         CXP Module
  Xcvr 2         REV 01   740-047547   XB47FB00N         CXP Module
  Xcvr 4         REV 01   740-047547   XB48FB05U         CXP Module
  Xcvr 6         REV 01   740-047547   XB48FB05L         CXP Module
Fan Tray 0                                               Front Top Fan Tray
Fan Tray 1                                               Front Bottom Fan Tray
Fan Tray 2                                               Rear Fan Tray -- Rev 4
```

show chassis hardware lcc (TX Matrix Plus Router with 3D SIBs)

```
user@host> show chassis hardware lcc 0
lcc0-re0:
--------------------------------------------------------------------------
Hardware inventory:
Item             Version  Part number  Serial number     Description
Chassis                                JN11B23FEAHA      T1600
Midplane         REV 01   710-027486   RC9787            T-series Backplane
FPM GBUS         REV 13   710-002901   BBAG5132          T640 FPM Board
FPM Display      REV 04   710-021387   BBAL9612          T1600 FPM Display
CIP              REV 06   710-002895   BBAN0605          T-series CIP
PEM 0            REV 05   740-036442   1G022060143       Power Entry Module 6x60
PEM 1            REV 05   740-036442   1G022060011       Power Entry Module 6x60
SCG 0            REV 18   710-003423   BBAL7318          T640 Sonet Clock Gen.
SCG 1            REV 18   710-003423   BBAL7255          T640 Sonet Clock Gen.
Routing Engine 0 REV 07   740-026941   P737F-002933      RE-DUO-1800
Routing Engine 1 REV 06   740-026941   P737F-002749      RE-DUO-1800
CB 0             REV 11   710-022597   EH3611            LCC Control Board
CB 1             REV 11   710-022597   EH4798            LCC Control Board
FPC 5            REV 17   710-013037   BBAC5333          FPC Type 4-ES
```

```
  CPU            REV 10   710-016744   BBAB7619          ST-PMB2
  PIC 0          REV 18   750-017405   BBAE3420          4x 10GE (LAN/WAN) XFP
    Xcvr 0       REV 03   740-014289   T10C90659         XFP-10G-SR
  MMB 0          REV 05   710-025563   BBAB9538          ST-MMB2
  MMB 1          REV 05   710-025563   BBAB9502          ST-MMB2
FPC 7            REV 01   750-045173   BBAV0032          FPC Type 5-3D
  CPU
SPMB 0           REV 05   710-023321   EG9434            LCC Switch CPU
SPMB 1           REV 05   710-023321   EH3878            LCC Switch CPU
SIB 0            REV 01   750-041657   EH7997            LCC SIB 3D
  B Board        REV 01   711-042424   EH7674            LCC SIB 3D Mezz
  Xcvr 0         REV 01   740-047547   XB48FB014         CXP Module
  Xcvr 2         REV 01   740-047547   XB48FB05A         CXP Module
  Xcvr 4         REV 01   740-047547   XB48FB052         CXP Module
  Xcvr 6         REV 01   740-047547   XB48FB01B         CXP Module
SIB 1            REV 01   750-041657   EH8023            LCC SIB 3D
  B Board        REV 01   711-042424   EH7659            LCC SIB 3D Mezz
  Xcvr 0         REV 01   740-047547   XB48FB05J         CXP Module
  Xcvr 2         REV 01   740-047547   XB48FB01E         CXP Module
  Xcvr 4         REV 01   740-047547   XB48FB01J         CXP Module
  Xcvr 6         REV 01   740-047547   XB48FB02S         CXP Module
SIB 2            REV 03   750-041657   EJ6554            LCC SIB 3D
  B Board        REV 02   711-042424   EJ5756            LCC SIB 3D Mezz
  Xcvr 0         REV 01   740-047547   XB34FB01Z         CXP Module
  Xcvr 2         REV 01   740-047547   XB34FB013         CXP Module
  Xcvr 4         REV 01   740-047547   XB48FB04Z         CXP Module
  Xcvr 6         REV 01   740-047547   XB48FB05N         CXP Module
Fan Tray 0                                               Front Top Fan Tray
Fan Tray 1                                               Front Bottom Fan Tray
Fan Tray 2                                               Rear Fan Tray -- Rev 4
```

show chassis hardware sfc (TX Matrix Plus Router with 3D SIBs)

```
user@host> show chassis hardware sfc 0
sfc0-re0:
--------------------------------------------------------------------------
Hardware inventory:
Item             Version  Part number  Serial number     Description
Chassis                                JN11CAAA4AHB      TXP
Midplane         REV 05   710-022574   ABAC4696          SFC Midplane
FPM Display      REV 09   710-024027   EH3138            TXP FPM Display
CIP 0            REV 12   710-023792   EF6349            TXP CIP
CIP 1            REV 12   710-023792   EG5294            TXP CIP
PEM 0            Rev 06   740-027463   XH04595           Power Entry Module
PEM 1            Rev 06   740-027463   XH04592           Power Entry Module
Routing Engine 0 REV 07   740-026942   P737A-002541      RE-DUO-2600
Routing Engine 1 REV 07   740-026942   P737A-002602      RE-DUO-2600
CB 0             REV 15   710-022606   EH4376            SFC Control Board
CB 1             REV 15   710-022606   EH4379            SFC Control Board
SPMB 0                    BUILTIN                        SFC Switch CPU
SPMB 1                    BUILTIN                        SFC Switch CPU
SIB F13 0        REV 10   750-035002   EM9305            F13 SIB 3D
  B Board        REV 06   711-035082   EM9667            F13 SIB 3D Mezz
  P Board        REV 05   711-043544   EM9708            F13 SIB 3D Power
  Xcvr 0         REV 01   740-047547   XB34FB00S         CXP Module
  Xcvr 2         REV 01   740-047547   XB48FB01H         CXP Module
  Xcvr 4         REV 01   740-047547   XB34FB02W         CXP Module
  Xcvr 6         REV 01   740-047547   XB34FB01T         CXP Module
  Xcvr 8         REV 01   740-047547   XB48FB00W         CXP Module
  Xcvr 10        REV 01   740-047547   XB34FB01S         CXP Module
  Xcvr 12        REV 01   740-047547   XB34FB03H         CXP Module
```

```
  Xcvr 14        REV 01   740-047547   XB34FB023         CXP Module
SIB F13 3        REV 01   710-035001   EJ2612            F13 SIB 3D
  B Board        REV 01   711-035082   EJ3815            F13 SIB 3D Mezz
  P Board        REV 01   711-043544   EJ2678            F13 SIB 3D Power
  Xcvr 0         REV 01   740-047547   XB48FB04C         CXP Module
  Xcvr 2         REV 01   740-047547   XB48FB00Z         CXP Module
  Xcvr 4         REV 01   740-047547   XB47FB036         CXP Module
  Xcvr 6         REV 01   740-047547   XB47FB029         CXP Module
  Xcvr 8         REV 01   740-047547   XB48FB02N         CXP Module
  Xcvr 10        REV 01   740-047547   XB42FB0CS         CXP Module
  Xcvr 12        REV 01   740-047547   XB47FB01X         CXP Module
  Xcvr 14        REV 01   740-047547   XB48FB02F         CXP Module
SIB F13 6        REV 05   750-035002   EK2675            F13 SIB 3D
  B Board        REV 03   711-035082   EK2612            F13 SIB 3D Mezz
  P Board        REV 04   711-043544   EK1179            F13 SIB 3D Power
  Xcvr 0         REV 01   740-047547   XB48FB01T         CXP Module
  Xcvr 2         REV 01   740-047547   XB48FB02M         CXP Module
  Xcvr 4         REV 01   740-047547   XB48FB031         CXP Module
  Xcvr 6         REV 01   740-047547   XB48FB04P         CXP Module
  Xcvr 8         REV 01   740-047547   XB48FB02T         CXP Module
  Xcvr 10        REV 01   740-047547   XB34FB01V         CXP Module
  Xcvr 12        REV 01   740-047547   XB48FB02C         CXP Module
  Xcvr 14                 NON-JNPR                       No Module
SIB F13 12       REV 01   710-035001   EJ2631            F13 SIB 3D
  B Board        REV 01   711-035082   EJ3808            F13 SIB 3D Mezz
  P Board        REV 01   711-043544   EJ2676            F13 SIB 3D Power
SIB F2S 0/0      REV 01   711-034977   EH9829            F2S SIB 3D
  B Board        REV 01   711-034979   EH9927            F2S SIB 3D Mezz
SIB F2S 0/2      REV 01   711-034977   EH9791            F2S SIB 3D
  B Board        REV 01   711-034979   EH9852            F2S SIB 3D Mezz
SIB F2S 0/4      REV 01   711-034977   EH9803            F2S SIB 3D
  B Board        REV 01   711-034979   EH9915            F2S SIB 3D Mezz
SIB F2S 0/6      REV 01   711-034977   EH9763            F2S SIB 3D
  B Board        REV 01   711-034979   EH9880            F2S SIB 3D Mezz
SIB F2S 1/0      REV 01   711-034977   EH9757            F2S SIB 3D
  B Board        REV 01   711-034979   EH9889            F2S SIB 3D Mezz
SIB F2S 1/2      REV 01   711-034977   EH9815            F2S SIB 3D
  B Board        REV 01   711-034979   EH9890            F2S SIB 3D Mezz
SIB F2S 1/4      REV 08   750-034978   EN1954            F2S SIB 3D
  B Board        REV 02   711-034979   EN1436            F2S SIB 3D Mezz
SIB F2S 1/6      REV 01   711-034977   EJ7054            F2S SIB 3D
  B Board        REV 01   711-034979   EJ8238            F2S SIB 3D Mezz
SIB F2S 2/0      REV 01   711-034977   EH9830            F2S SIB 3D
  B Board        REV 01   711-034979   EH9844            F2S SIB 3D Mezz
SIB F2S 2/2      REV 01   711-034977   EH9818            F2S SIB 3D
  B Board        REV 01   711-034979   EH9888            F2S SIB 3D Mezz
SIB F2S 2/4      REV 01   711-034977   EH9795            F2S SIB 3D
  B Board        REV 01   711-034979   EH9869            F2S SIB 3D Mezz
SIB F2S 2/6      REV 01   711-034977   EJ7026            F2S SIB 3D
  B Board        REV 01   711-034979   EJ8273            F2S SIB 3D Mezz
SIB F2S 3/0      REV 01   711-034977   EH9811            F2S SIB 3D
  B Board        REV 01   711-034979   EH9892            F2S SIB 3D Mezz
SIB F2S 3/2      REV 01   711-034977   EH9812            F2S SIB 3D
  B Board        REV 01   711-034979   EH9877            F2S SIB 3D Mezz
SIB F2S 3/4      REV 08   750-034978   EN1947            F2S SIB 3D
  B Board        REV 02   711-034979   EN1471            F2S SIB 3D Mezz
Fan Tray 0       REV 10   760-024497   EH3313            Front Fan Tray
Fan Tray 1       REV 10   760-024497   EH3290            Front Fan Tray
Fan Tray 2       REV 10   760-024502   EH3292            Rear Fan Tray
Fan Tray 3       REV 10   760-024502   EH3287            Rear Fan Tray
```

```
Fan Tray 4       REV 10   760-024502   EH3286            Rear Fan Tray
Fan Tray 5       REV 10   760-024502   EH3285            Rear Fan Tray
```

show chassis hardware (16-Port 10-Gigabit Ethernet MPC with SFP+ Optics [MX Series Routers])

```
user@host> show chassis hardware
Hardware inventory:
    Item             Version  Part number  Serial number     Description
    Chassis                                JN112D865AFA      MX960
    Midplane         REV 03   710-013698   TS3339            MX960 Backplane
    FPM Board        REV 03   710-014974   WW6267            Front Panel Display

    PDM              Rev 03   740-013110   QCS12485026       Power Distribution
Module
    PEM 0            Rev 04   740-013682   QCS12434086       PS 1.7kW; 200-240VAC
 in
    PEM 1            Rev 04   740-013682   QCS1243408Z       PS 1.7kW; 200-240VAC
 in
    PEM 2            Rev 04   740-013682   QCS1243407X       PS 1.7kW; 200-240VAC
 in
    Routing Engine 0 REV 07   740-015113   9009009677        RE-S-1300
    Routing Engine 1 REV 07   740-015113   9009011510        RE-S-1300
    CB 0             REV 03   710-021523   XF0394            MX SCB
    CB 1             REV 03   710-021523   XF0550            MX SCB
    CB 2             REV 03   710-021523   XD7455            MX SCB
    FPC 4            REV 02   750-028467   JR6127            MPC M 16x 10GE
      CPU            REV 02   711-029089   JX0129            AS PMB
      PIC 0                   BUILTIN      BUILTIN           4x 10GE(LAN) SFP+
      PIC 1                   BUILTIN      BUILTIN           4x 10GE(LAN) SFP+
      PIC 2                   BUILTIN      BUILTIN           4x 10GE(LAN) SFP+
      PIC 3                   BUILTIN      BUILTIN           4x 10GE(LAN) SFP+
    Fan Tray 0       REV 05   740-014971   TP9990            Fan Tray
    Fan Tray 1       REV 05   740-014971   VS1709            Fan Tray
```

show chassis hardware (MPC3E [MX Series Routers])

```
user@host> show chassis hardware
Hardware inventory:
   Item             Version  Part number   Serial number     Description
   Chassis                                 JN1101AFEAFB      MX480
   Midplane         REV 05   710-017414    TR4444            MX480 Midplane
   FPM Board        REV 02   710-017254    KG6056            Front Panel Display

   PEM 0           Rev 03   740-017330    QCS082090FC      PS 1.2-1.7kW; 100-240V

   PEM 1           Rev 03   740-017330    QCS082090FD      PS 1.2-1.7kW; 100-240V

   Routing Engine 0 REV 07   740-013063    9009004124        RE-S-2000
   Routing Engine 1 REV 07   740-013063    9009005569        RE-S-2000
   CB 0             REV 07   710-021523    XZ3587            MX SCB
   CB 1             REV 03   710-021523    KH8306            MX SCB
   FPC 1            REV 04.1.07 750-033205 P1240             MPC Type 3
    CPU             REV 01   711-035209    YL0504            HMPC PMB 2G
    MIC 1           REV 10   750-033199    YX4495            1X100GE CFP
     PIC 2                   BUILTIN      BUILTIN           1X100GE CFP
      Xcvr 0        REV 01   740-032210    C22CQNE           CFP-100G-LR4
   FPC 2            REV 26   750-016670    KH0045            DPCE 40x 1GE R EQ
    CPU             REV 07   710-013713    KF5448            DPC PMB
    PIC 0                    BUILTIN      BUILTIN           10x 1GE(LAN) EQ
     Xcvr 0         REV 01   740-011613    PF21JHU           SFP-SX
```

```
    PIC 1                     BUILTIN       BUILTIN           10x 1GE(LAN) EQ
     Xcvr 9         REV 01    740-011613    AM0813S8ZL6       SFP-SX
    PIC 2                     BUILTIN       BUILTIN           10x 1GE(LAN) EQ
     Xcvr 0         REV 02    740-011613    PGL2KYF           SFP-SX
     Xcvr 2         REV 01    740-011613    AM0806S8N4P       SFP-SX
    PIC 3                     BUILTIN       BUILTIN           10x 1GE(LAN) EQ
     Xcvr 5         REV 01    740-011613    AM0815S967N       SFP-SX
     Xcvr 7         REV 01    740-011613    AM0806S8N1X       SFP-SX
     Xcvr 8         REV 01    740-011613    AM0815S967J       SFP-SX
     Xcvr 9         REV 01    740-011613    AM0815S967M       SFP-SX
   FPC 3            REV 12.2.09 750-033205 YR9443            MPC Type 3
    CPU             REV 03    711-035209    YL6931            HMPC PMB 2G
    MIC 0           REV 05    750-033199    YR3269            1X100GE CFP
     PIC 0                    BUILTIN       BUILTIN           1X100GE CFP
      Xcvr 0        REV 01    740-032210    ULH0KG3           CFP-100G-LR4
    MIC 1           REV 02    750-033199    YG3245            1X100GE CFP
     PIC 2                    BUILTIN       BUILTIN           1X100GE CFP
      Xcvr 0        REV 01    740-032210    ULH0KGF           CFP-100G-LR4
  FPC 4             REV 12.3.09 750-033205 YR9437            MPC Type 3
   CPU              REV 03    711-035209    YT5857            HMPC PMB 2G
   MIC 0            REV 05    750-033199    YR3295            1X100GE CFP
    PIC 0                     BUILTIN       BUILTIN           1X100GE CFP
     Xcvr 0                   NON-JNPR      X12000187         CFP-100G-SR10
   MIC 1            REV 10    750-033199    YX4518            1X100GE CFP
    PIC 2                     BUILTIN       BUILTIN           1X100GE CFP
     Xcvr 0        REV 01    740-035329    X12J00008         CFP-100G-SR10
  FPC 5            REV 06    750-024884    JW9769            MPC Type 2 3D EQ
  CPU              REV 02    711-028401    JR6158            MPC PMB 2G Proto
  MIC 0            REV 05    750-028387    JR6197            3D 4x 10GE  XFP
   PIC 0                     BUILTIN       BUILTIN           2x 10GE  XFP
    Xcvr 0         REV 01    740-014289    T07M71112         XFP-10G-SR
    Xcvr 1         REV 02    740-014289    T08L85610         XFP-10G-SR
    PIC 1                     BUILTIN       BUILTIN           2x 10GE  XFP
  MIC 1            REV 22    750-028392    YM0053            3D 20x 1GE(LAN) SFP

   PIC 2                     BUILTIN       BUILTIN           10x 1GE(LAN) SFP
    Xcvr 0         REV 01    740-011613    AM0703S005B       SFP-SX
    Xcvr 1         REV 01    740-011613    E07L01352         SFP-SX
   PIC 3                     BUILTIN       BUILTIN           10x 1GE(LAN) SFP
    Xcvr 5         REV 01    740-013111    6500217           SFP-T
    Xcvr 9         REV 02    740-013111    8499527           SFP-T
  Fan Tray                                                   Left Fan Tray
```

The PIC number for MIC 1 always starts from 2 (even if the first MIC is a 1X100GE CFP or a legacy MIC).

show chassis hardware (QFX3500 Switches)

```
user@switch> show chassis hardware
Hardware inventory:
Item             Version  Part number  Serial number     Description
Chassis                                                  QFX3500
Routing Engine 0          BUILTIN      BUILTIN           QFX Routing Engine
FPC 0            REV 04   750-044071   BBAR3902          QFX3500-48S4Q-AFI
  CPU                     BUILTIN      BUILTIN           FPC CPU
  PIC 0                   BUILTIN      BUILTIN           48x 10G-SFP+
  PIC 1                   BUILTIN      BUILTIN           15x 10G-SFP+
  MGMT BRD       REV 02   750-044063   BBAR0398          QFX3500-MGMT-SFP-AFO
    Xcvr 0       REV 01   740-011614   AC0946S0BD1       SFP-LX10
    Xcvr 1       REV 02   740-013111   A281922           SFP-T
```

```
Power Supply 0   Rev 04   740-032091   UI00677          JPSU-650W-AC-AFI
Power Supply 1   REV 00   740-041741   VJ00162          JPSU-650W-AC-AFO
Fan Tray 0                                              QFX Fan Tray, Back to
Front Airlfow
Fan Tray 1                                              QFX Fan Tray, Back to
Front Airlfow
Fan Tray 2                                              QFX Fan Tray, Back to
Front Airlfow
```

show chassis hardware detail (QFX3500 Switches)

```
user@switch> show chassis hardware detail
Hardware inventory:
Item             Version  Part number  Serial number     Description
Chassis                                JN000TEST5        QFX3500
Routing Engine 0          BUILTIN      BUILTIN           QFX Routing Engine
FPC 0            REV 05   750-036931   EE0823            QFX3500-48S4Q-AFI


  CPU                     BUILTIN      BUILTIN           FPC CPU
  PIC 0                   BUILTIN      BUILTIN           48x 10G-SFP+
    Xcvr 0       REV 01   740-030589   S99E270079        SFP+-10G-LPBK
    Xcvr 1       REV 01   740-030589   S9AK450099        SFP+-10G-LPBK
    Xcvr 2       REV 01   740-030589   S99E270078        SFP+-10G-LPBK
    Xcvr 3       REV 01   740-030589   S9AK450098        SFP+-10G-LPBK
    Xcvr 4       REV 01   740-030589   S99E270075        SFP+-10G-LPBK
    Xcvr 5       REV 01   740-030589   S9AK450093        SFP+-10G-LPBK
    Xcvr 6       REV 01   740-030589   S9AK450097        SFP+-10G-LPBK
    Xcvr 7       REV 01   740-030589   S9AK450095        SFP+-10G-LPBK
    Xcvr 8       REV 01   740-030589   S99E270072        SFP+-10G-LPBK
    Xcvr 9       REV 01   740-030589   S99E270073        SFP+-10G-LPBK
    Xcvr 10      REV 01   740-030589   S99E270080        SFP+-10G-LPBK
    Xcvr 11      REV 01   740-030589   S9AK450169        SFP+-10G-LPBK
    Xcvr 12      REV 01   740-030589   S99E270076        SFP+-10G-LPBK
    Xcvr 13      REV 01   740-030589   S9AK450167        SFP+-10G-LPBK
    Xcvr 14      REV 01   740-030589   S9AK450170        SFP+-10G-LPBK
    Xcvr 15      REV 01   740-030589   S9AK450166        SFP+-10G-LPBK
    Xcvr 16      REV 01   740-030589   S9AK450092        SFP+-10G-LPBK
    Xcvr 17      REV 01   740-030589   S9AK450163        SFP+-10G-LPBK
    Xcvr 18      REV 01   740-030589   S9AK450094        SFP+-10G-LPBK
    Xcvr 19      REV 01   740-030589   S9AK450100        SFP+-10G-LPBK
    Xcvr 20      REV 01   740-030589   S9AK450168        SFP+-10G-LPBK
    Xcvr 21      REV 01   740-030589   S9AK450165        SFP+-10G-LPBK
    Xcvr 22      REV 01   740-030589   S9AK450073        SFP+-10G-LPBK
    Xcvr 23      REV 01   740-030589   S9AK450164        SFP+-10G-LPBK
    Xcvr 24      REV 01   740-030589   S9AK450074        SFP+-10G-LPBK
    Xcvr 25      REV 01   740-030589   SA62270195        SFP+-10G-LPBK
    Xcvr 26      REV 01   740-030589   S9AK450078        SFP+-10G-LPBK
    Xcvr 27      REV 01   740-030589   S9AK450024        SFP+-10G-LPBK
    Xcvr 28      REV 01   740-030589   S9AK450027        SFP+-10G-LPBK
    Xcvr 29      REV 01   740-030589   S9AK450080        SFP+-10G-LPBK
    Xcvr 30      REV 01   740-030589   S9AK450030        SFP+-10G-LPBK
    Xcvr 31      REV 01   740-030589   S9AK450025        SFP+-10G-LPBK
    Xcvr 32      REV 01   740-030589   S9AK450023        SFP+-10G-LPBK
    Xcvr 33      REV 01   740-030589   S9AK450075        SFP+-10G-LPBK
    Xcvr 34      REV 01   740-030589   S9AK450161        SFP+-10G-LPBK
    Xcvr 35      REV 01   740-030589   S9AK450071        SFP+-10G-LPBK
    Xcvr 36      REV 01   740-030589   S9AK450072        SFP+-10G-LPBK
    Xcvr 37      REV 01   740-030589   S9AK450022        SFP+-10G-LPBK
    Xcvr 38      REV 01   740-030589   S9AK450021        SFP+-10G-LPBK
    Xcvr 39      REV 01   740-030589   S9AK450175        SFP+-10G-LPBK
```

```
    Xcvr 40      REV 01   740-030589   S9AK450162        SFP+-10G-LPBK
    Xcvr 41      REV 01   740-030589   S99E270074        SFP+-10G-LPBK
    Xcvr 42      REV 01   740-030589   S9AK450174        SFP+-10G-LPBK
    Xcvr 43      REV 01   740-030589   S9AK450077        SFP+-10G-LPBK
    Xcvr 44      REV 01   740-030589   S9AK450076        SFP+-10G-LPBK
    Xcvr 45      REV 01   740-030589   S9AK450026        SFP+-10G-LPBK
    Xcvr 46      REV 01   740-030589   S9AK450079        SFP+-10G-LPBK
    Xcvr 47      REV 01   740-030589   S9AK450029        SFP+-10G-LPBK
  PIC 1                   BUILTIN      BUILTIN           15x 10G-SFP+
    Xcvr 1       REV 01   740-032986   QA170087          QSFP+-40G-SR4
    Xcvr 4       REV 01   740-032986   QA360442          QSFP+-40G-SR4
    Xcvr 8       REV 01   740-032986   QA170091          QSFP+-40G-SR4
    Xcvr 12      REV 01   740-032986   QA170042          QSFP+-40G-SR4
MGMT BRD       REV 08   750-036946   EE0731            QFX3500-MB
Power Supply 0   Rev 04   740-032091   UI00690           QFX PS 650W AC
Power Supply 1   Rev 04   740-032091   UI00679           QFX PS 650W AC
Fan Tray 0                                               QFX Fan Tray
Fan Tray 1                                               QFX Fan Tray
```

show chassis hardware models (QFX3500 Switches)

```
user@switch> show chassis hardware models
Hardware inventory:
Item             Version  Part number  Serial number     FRU model number
Routing Engine 0          BUILTIN      BUILTIN
FPC 0            REV 02   711-032234   EC4074
Power Supply 0   PSMI 2C  11-d65800    --
```

show chassis hardware clei-models (QFX3500 Switches)

```
user@switch> show chassis hardware clei-models
Hardware inventory:
Item             Version  Part number  CLEI code         FRU model number
Routing Engine 0          BUILTIN
FPC 0            REV 02   711-032234
Power Supply 0   PSMI 2C  11-d65800
```

show chassis hardware clei-models (QFX5100 Switches)

```
user@switch> show chassis hardware clei-models
Hardware inventory:
Item             Version  Part number  CLEI code         FRU model number
Routing Engine 0          BUILTIN      CMMNV10BRA
FPC 0            REV 01   611-053010   CMMNV10BRA
  PIC 0                   BUILTIN      CMMNV10BRA
Power Supply 0   REV 03   740-053352   MUPABHBAA         JPSU-850W-AC-AFO
Power Supply 1   REV 03   740-053352   MUPABHBAA         JPSU-850W-AC-AFO
Fan Tray 0                                               QFX5100-96S-FANAFO
Fan Tray 1                                               QFX5100-96S-FANAFO
Fan Tray 2                                               QFX5100-96S-FANAFO
```

show chassis hardware (QFX10002 Switches)

```
user@switch> show chassis hardware
Hardware inventory:
Item             Version  Part number  Serial number     Description
Chassis                                12345             QFX10002-36Q
Pseudo CB 0
Routing Engine 0          BUILTIN      BUILTIN           RE-QFX10002-36Q
```

```
FPC 0            REV 26   750-059497   ACNL1387          QFX10002-36Q
  CPU                     BUILTIN      BUILTIN           FPC CPU
  PIC 0                   BUILTIN      BUILTIN           36X40G
    Xcvr 0       REV 01   740-038623   MOC15476230389    QSFP+-40G-CU1M
    Xcvr 1       REV 01   740-038623   MOC15476230438    QSFP+-40G-CU1M
    Xcvr 2       REV 01   740-038623   MOC15446231917    QSFP+-40G-CU1M
    Xcvr 3       REV 01   740-038623   MOC15446232043    QSFP+-40G-CU1M
    Xcvr 4       REV      740-038624   APF15470032AVB    QSFP+-40G-CU3M
    Xcvr 5       REV      740-038624   APF15470032H15    QSFP+-40G-CU3M
    Xcvr 6       REV      740-038624   APF15470032A9J    QSFP+-40G-CU3M
    Xcvr 7       REV      740-038624   APF15470032AG7    QSFP+-40G-CU3M
    Xcvr 8       REV      740-038624   APF15470032ALD    QSFP+-40G-CU3M
    Xcvr 9       REV 01   740-053203   APF15470071V43    QSFP+-40G-ACU7M
    Xcvr 10      REV 01   740-053203   APF15470071V15    QSFP+-40G-ACU7M
    Xcvr 11      REV 01   740-053203   APF15470071V12    QSFP+-40G-ACU7M
    Xcvr 13      REV      740-038624   APF15470032H1N    QSFP+-40G-CU3M
    Xcvr 18      REV 01   740-053203   APF154800738HW    QSFP+-40G-ACU7M
    Xcvr 19      REV 01   740-038153   MOC12161530041    QSFP+-40G-CU3M
    Xcvr 20      REV 01   740-038153   APF15500034A29    QSFP+-40G-CU3M
    Xcvr 30      REV 01   740-038623   MOC15476230444    QSFP+-40G-CU1M
    Xcvr 31      REV 01   740-032986   QC330038          QSFP+-40G-SR4
    Xcvr 32      REV 01   740-032986   QC290540          QSFP+-40G-SR4
  Mezz           REV 02   711-059316   ACNG9344          QFX10002 36X40G Mezz
Power Supply 0   REV 03   740-054405   1EDN5389293       AC AFO 1600W PSU
Power Supply 1   REV 03   740-054405   1EDN5346300       AC AFO 1600W PSU
Fan Tray 0                                               QFX10002 Fan Tray 0,
Front to Back Airflow - AFO
Fan Tray 1                                               QFX10002 Fan Tray 1,
Front to Back Airflow - AFO
Fan Tray 2                                               QFX10002 Fan Tray 2,
Front to Back Airflow - AFO
```

show chassis hardware detail (QFX10002 Switches)

```
user@switch> show chassis hardware detail
Hardware inventory:
Item             Version  Part number  Serial number     Description
Chassis                                12345             QFX10002-72Q
Pseudo CB 0
Routing Engine 0          BUILTIN      BUILTIN           RE-QFX10002-72Q
ada0   8193 MB  QEMU                 QM00001           Virtio Block Disk
ada1   4096 MB  QEMU                 QM00002           Virtio Block Disk
ada2    512 MB  QEMU                 QM00003           Virtio Block Disk
ada3   1024 MB  QEMU                 QM00004           Virtio Block Disk
usb0 (addr 0.1)  UHCI root HUB 0     Intel             uhub0
usb0 (addr 1.1)  EHCI root HUB 0     Intel             uhub1
usb0 (addr 1.2)  product 0x0020 32   vendor 0x8087     uhub2
usb0 (addr 1.3)  Ultra Fit  21891    SanDisk           umass0
FPC 0            REV 05   750-055415 ACAM4724          QFX10002-72Q
CPU                     BUILTIN      BUILTIN           FPC CPU
```

show chassis hardware (QFX10008 and QFX10016 Switches)

```
user@switch> show chassis hardware
Hardware inventory:
Item             Version  Part number  Serial number     Description
Chassis                                DE994             QFX10008
Midplane         REV 28   750-054097   ACPG3671          QFX10008 Midplane
Routing Engine 0          BUILTIN      BUILTIN           Routing Engine
```

```
Routing Engine 1          BUILTIN      BUILTIN          Routing Engine
CB 0            REV 03    750-068820   ACPA3224         Control Board
CB 1            REV 03    750-068820   ACPM9059         Control Board
FPC 0           REV 33    750-051354   ACNP4522         ULC-36Q-12Q28
  CPU                     BUILTIN      BUILTIN          FPC CPU
  PIC 0                   BUILTIN      BUILTIN          36X40G
    Xcvr 0      REV 01    740-038623   MOC16016230802   QSFP+-40G-CU1M
    Xcvr 1      REV 01    740-038623   MOC16016230802   QSFP+-40G-CU1M
    Xcvr 2      REV 01    740-038623   MOC16016231080   QSFP+-40G-CU1M
    Xcvr 3      REV 01    740-038623   MOC16016231080   QSFP+-40G-CU1M
    Xcvr 4      REV       740-038624   APF16220038H15   QSFP+-40G-CU3M
    Xcvr 5      REV       740-038624   APF16220038H5M   QSFP+-40G-CU3M
    Xcvr 6      REV       740-038624   APF160600308W8   QSFP+-40G-CU3M
    Xcvr 8      REV       740-038624   APF16210038FFL   QSFP+-40G-CU3M
    Xcvr 9      REV       740-038624   APF16210038F6F   QSFP+-40G-CU3M
    Xcvr 10     REV       740-038624   APF1605003032B   QSFP+-40G-CU3M
    Xcvr 11     REV       740-038624   APF16070030CDB   QSFP+-40G-CU3M
    Xcvr 13     REV       740-038624   APF16210038FEW   QSFP+-40G-CU3M
    Xcvr 15     REV 01    740-052307   APF16100071C1L   QSFP+-40G-ACU7M
    Xcvr 16     REV       740-038625   APF1623005048E   QSFP+-40G-CU5M
    Xcvr 17     REV       740-038625   APF16230050471   QSFP+-40G-CU5M
    Xcvr 18     REV       740-038625   APF1623005044D   QSFP+-40G-CU5M
    Xcvr 19     REV 01    740-052307   APF16100071C30   QSFP+-40G-ACU7M
    Xcvr 20     REV       740-038625   APF16290055004   QSFP+-40G-CU5M
    Xcvr 21     REV 01    740-038153   APF1622003970G   QSFP+-40G-CU3M
    Xcvr 22     REV       740-038624   APF16190036R90   QSFP+-40G-CU3M
    Xcvr 23     REV       740-038624   APF16050030374   QSFP+-40G-CU3M
    Xcvr 24     REV 01    740-038153   APF162400318HC   QSFP+-40G-CU3M
    Xcvr 30     REV       740-038624   APF1606003097A   QSFP+-40G-CU3M
    Xcvr 31     REV 01    740-052307   APF160500702R9   QSFP+-40G-ACU7M
    Xcvr 32     REV       740-038624   APF16220038GVR   QSFP+-40G-CU3M
FPD Board       REV 07    711-054687   ACPC7158         QFX10000 FPD
Power Supply 0  REV 02    740-049388   1EDL63104D6      QFX10000 AC
Power Supply 1  REV 02    740-049388   1EDL62503XC      QFX10000 AC
Power Supply 2  REV 02    740-049388   1EDL62503XS      QFX10000 AC
Power Supply 3  REV 02    740-049388   1EDL62503T8      QFX10000 AC
Power Supply 4  REV 02    740-049388   1EDL62503TR      QFX10000 AC
Power Supply 5  REV 02    740-049388   1EDL62503T5      QFX10000 AC
FTC 0           REV 15    750-050108   ACPF4227         QFX10000 FTC
FTC 1           REV 15    750-050108   ACPF4228         QFX10000 FTC
Fan Tray 0      REV 09    760-054372   ACNV5506         QFX10008 FHB
Fan Tray 1      REV 09    760-054372   ACNV5365         QFX10008 FHB
SIB 0           REV 27    750-050058   ACPM4212         QFX10008 SIB
SIB 1           REV 27    750-050058   ACPM4253         QFX10008 SIB
SIB 2           REV 27    750-050058   ACPM4174         QFX10008 SIB
SIB 3           REV 27    750-050058   ACPM4191         QFX10008 SIB
SIB 4           REV 27    750-050058   ACPM4216         QFX10008 SIB
SIB 5           REV 27    750-050058   ACPM4286         QFX10008 SIB
```

show chassis hardware detail (QFX10008 and QFX10016 Switches)

```
user@switch> show chassis hardware details
Hardware inventory:
Item            Version  Part number  Serial number     Description
Chassis                               12345             QFX10008
Midplane        REV 01   750-054097   ACAM1754          QFX10008 Midplane
Routing Engine 0         BUILTIN      BUILTIN           Routing Engine
ada0   8193 MB  QEMU                 QM00001           Virtio Block Disk
ada1   4096 MB  QEMU                 QM00002           Virtio Block Disk
ada2    512 MB  QEMU                 QM00003           Virtio Block Disk
ada3   1024 MB  QEMU                 QM00004           Virtio Block Disk
```

```
usb0 (addr 1)  UHCI root HUB 0       Intel             uhub0
usb0 (addr 1)  EHCI root HUB 0       Intel             uhub1
usb0 (addr 2)  product 0x0020 32     vendor 0x8087     uhub2
Routing Engine 1          BUILTIN      BUILTIN           Routing Engine
ada0   8193 MB  QEMU                 QM00001           Virtio Block Disk
ada1   4096 MB  QEMU                 QM00002           Virtio Block Disk
ada2    512 MB  QEMU                 QM00003           Virtio Block Disk
ada3   1024 MB  QEMU                 QM00004           Virtio Block Disk
usb0 (addr 0.1)  UHCI root HUB 0     Intel             uhub0
usb0 (addr 1.1)  EHCI root HUB 0     Intel             uhub1
usb0 (addr 1.2)  product 0x0020 32   vendor 0x8087     uhub2
CB 0             REV 16   750-052688   ACAM7936          Control Board
CB 1             REV 18   750-052688   ACAM7708          Control Board
FPC 0            REV 26   750-051351   ACPJ1372          ULC-60S-6Q Main Board
CPU                     BUILTIN      BUILTIN           FPC CPU
```

show chassis hardware interconnect-device (QFabric Systems)

```
user@switch> show chassis hardware interconnect-device interconnect1
Hardware inventory:
Item             Version  Part number  Serial number     Description
Chassis          REV 07                                  QFX_olive
Midplane         REV 07   750-021261   BH0208188289      QFX Midplane
CB 0             REV 07   750-021261   BH0208188289      QFXIC08-CB4S
```

show chassis hardware node-device (QFabric Systems)

```
user@switch> show chassis hardware node-device node1
Routing Engine 0   BUILTIN      BUILTIN           QFX Routing Engine
node1            REV 05   711-032234   ED3694            QFX3500-48S4Q-AFI


  CPU                     BUILTIN      BUILTIN           FPC CPU
  PIC 0                   BUILTIN      BUILTIN           48x 10G-SFP+
    Xcvr 8       REV 01   740-030658   AD0946A028B       SFP+-10G-USR
...
```

show chassis hardware (PTX5000 Packet Transport Router)

```
user@host> show chassis hardware
Hardware inventory:
Item             Version  Part number  Serial number     Description
Chassis                                JN11D1FD7AJA      PTX5000
Midplane         REV 03   711-031896   ABAC5589          Midplane-8S
FPM              REV 08   760-030647   EG1679            Front Panel Display
PDU 0            Rev 05   740-032019   ZE00006           DC Power Dist Unit
  PSM 0          Rev 05   740-032022   ZJ00018           DC 12V Power Supply
  PSM 1          Rev 04   740-032022   ZC00052           DC 12V Power Supply
  PSM 2          Rev 04   740-032022   ZD00051           DC 12V Power Supply
  PSM 3          Rev 05   740-032022   ZJ00060           DC 12V Power Supply
CCG 0            REV 04   750-030653   EG3703            Clock Generator
CCG 1            REV 04   750-030653   EG3698            Clock Generator
Routing Engine 0 REV 05   740-026942   P737A-002231      RE-DUO-2600
Routing Engine 1 REV 06   740-026942   P737A-002438      RE-DUO-2600
CB 0             REV 08   750-030625   EG5519            Control Board
CB 1             REV 08   750-030625   EG5516            Control Board
FPC 0            REV 18   750-036844   EJ3080            FPC
  CPU            REV 12   711-030686   EJ3260            SNG PMB
FPC 2            REV 13   750-036844   EG5065            FPC
  CPU            REV 09   711-030686   EG4082            SNG PMB
```

```
  PIC 0          REV 14   750-031913   EG5127           24x 10GE(LAN) SFP+
    Xcvr 0       REV 01   740-031980   143363A00240     SFP+-10G-SR
    Xcvr 1       REV 01   740-031981   UK90PZ1          SFP+-10G-LR
    Xcvr 2       REV 01   740-031980   AD1141A04XH      SFP+-10G-SR
    Xcvr 3       REV 01   740-031981   UK90Q46          SFP+-10G-LR
    Xcvr 4       REV 01   740-031980   AD1141A04X4      SFP+-10G-SR
    Xcvr 6       REV 01   740-031980   B11H02560        SFP+-10G-SR
    Xcvr 7       REV 01   740-031980   B11C01589        SFP+-10G-SR
    Xcvr 8       REV 01   740-031980   AD1141A04XF      SFP+-10G-SR
    Xcvr 10      REV 01   740-031980   123363A01094     SFP+-10G-SR
    Xcvr 11      REV 01   740-031980   AK80LKF          SFP+-10G-SR
    Xcvr 12      REV 01   740-031980   183363A01528     SFP+-10G-SR
    Xcvr 14      REV 01   740-031980   193363A01079     SFP+-10G-SR
    Xcvr 15      REV 01   740-031980   AK80MC8          SFP+-10G-SR
    Xcvr 16      REV 01   740-031980   AJC0BHC          SFP+-10G-SR
    Xcvr 19      REV 01   740-021309   J08D26856        SFP+-10G-LR
    Xcvr 21      REV 01   740-031980   AK80KCT          SFP+-10G-SR
    Xcvr 22      REV 01   740-031981   UK90PZL          SFP+-10G-LR
    Xcvr 23      REV 01   740-031980   AK80N1V          SFP+-10G-SR
FPC 3            REV 13   750-036844   EG5074           FPC
  CPU            REV 09   711-030686   EG4064           SNG PMB
  PIC 1          REV 10   750-031903   EG0325           SNG Load
FPC 5            REV 06   750-036844   EH3198           FPC
  CPU
  PIC 0          REV 14   750-031913   EG5134           24x 10GE(LAN) SFP+
    Xcvr 0       REV 01   740-031980   AK80LBH          SFP+-10G-SR
    Xcvr 1       REV 01   740-031980   B11B03724        SFP+-10G-SR
    Xcvr 2       REV 01   740-031980   AK80FMH          SFP+-10G-SR
    Xcvr 5       REV 01   740-031980   B11J00818        SFP+-10G-SR
    Xcvr 6       REV 01   740-031980   193363A00743     SFP+-10G-SR
    Xcvr 7       REV 01   740-031980   B11B06125        SFP+-10G-SR
    Xcvr 10      REV 01   740-031980   B11H02529        SFP+-10G-SR
    Xcvr 11      REV 01   740-031980   AK80LFB          SFP+-10G-SR
    Xcvr 12      REV 01   740-031980   193363A01061     SFP+-10G-SR
    Xcvr 15      REV 01   740-031980   B11J00687        SFP+-10G-SR
    Xcvr 16      REV 01   740-031980   193363A00738     SFP+-10G-SR
    Xcvr 18      REV 01   740-031980   AK80MQX          SFP+-10G-SR
    Xcvr 19      REV 01   740-021309   J08C17257        SFP+-10G-LR
    Xcvr 22      REV 01   740-031980   B11J00730        SFP+-10G-SR
    Xcvr 23      REV 01   740-031980   AK80KEE          SFP+-10G-SR
  PIC 1          REV 08   750-036710   EG3105           2x 40GE CFP
    Xcvr 0       REV 01   740-034554   B260HLT          CFP-40G-LR4
    Xcvr 1       REV 01   740-034554   B11C02847        CFP-40G-LR4
FPC 6            REV 18   750-036844   EJ4391           FPC
  CPU            REV 12   711-030686   EJ3257           SNG PMB
FPC 7            REV 18   750-036844   EJ4382           FPC
  CPU            REV 12   711-030686   EJ3238           SNG PMB
SPMB 0           REV 10   711-030686   EG5418           SNG PMB
SPMB 1           REV 09   711-030686   EG5373           SNG PMB
SIB 0            REV 07   750-030631   EG4858           SIB-I-8S
SIB 1            REV 07   750-030631   EG4872           SIB-I-8S
SIB 2            REV 07   750-030631   EG4866           SIB-I-8S
SIB 3            REV 07   750-030631   EG6011           SIB-I-8S
SIB 4            REV 07   750-030631   EG4907           SIB-I-8S
SIB 5            REV 07   750-030631   EG4879           SIB-I-8S
SIB 6            REV 07   750-030631   EG4864           SIB-I-8S
SIB 7            REV 07   750-030631   EG4899           SIB-I-8S
SIB 8            REV 07   750-030631   EG4880           SIB-I-8S
Fan Tray 0       REV 04   760-032784   EG1496           Vertical Fan Tray
Fan Tray 1       REV 04   760-030642   EG1335           Horizontal Fan Tray
Fan Tray 2       REV 02   760-030642   ED4952           Horizontal Fan Tray
```

show chassis hardware (PTX5000 Packet Transport Router with AC PSM and PDU)

```
user@host> show chassis hardware
Hardware inventory:
Item             Version  Part number  Serial number     Description
Chassis                                JN12223A6AJA      PTX5000
Midplane         REV 16   750-035893   ACRA1350          Midplane-8S
FPM              REV 12   760-030647   BBBD5625          Front Panel Display
PDU 0           Rev 01   740-048338   1GB83360005       High Capacity AC WYE PDU

  PSM 0          Rev 01   740-048334   1GB43360074       High Capacity AC PSM
  PSM 1          Rev 01   740-048334   1GB43360001       High Capacity AC PSM
  PSM 2          Rev 01   740-048334   1GB43360104       High Capacity AC PSM
  PSM 3          Rev 01   740-048334   1GB43360042       High Capacity AC PSM
  PSM 4          Rev 01   740-048334   1GB43360068       High Capacity AC PSM
  PSM 5          Rev 01   740-048334   1GB43360080       High Capacity AC PSM
  PSM 6          Rev 01   740-048334   1GB43360046       High Capacity AC PSM
  PSM 7          Rev 01   740-048334   1GB43360100       High Capacity AC PSM
PDU 1           Rev 01   740-048338   1GB83360006       High Capacity AC WYE PDU

  PSM 0          Rev 01   740-048334   1GB43360069       High Capacity AC PSM
  PSM 1          Rev 01   740-048334   1GB43360099       High Capacity AC PSM
  PSM 2          Rev 01   740-048334   1GB43360050       High Capacity AC PSM
  PSM 3          Rev 01   740-048334   1GB43360095       High Capacity AC PSM
  PSM 4          Rev 01   740-048334   1GB43360101       High Capacity AC PSM
  PSM 5          Rev 01   740-048334   1GB43360075       High Capacity AC PSM
  PSM 6          Rev 01   740-048334   1GB43360047       High Capacity AC PSM
  PSM 7          Rev 01   740-048334   1GB43360019       High Capacity AC PSM
CCG 0            REV 09   750-030653   BBAZ5345          Clock Generator
...
```

show chassis hardware (PTX5000 Packet Transport Router with FPC2-PTX-P1A)

```
user@host> show chassis hardware
Hardware inventory:
Item             Version  Part number  Serial number     Description
Chassis                                JN1204FC0AJA      PTX5000
Midplane         REV 11   750-035893   ACAB8038          Midplane-8S
FPM              REV 12   760-030647   BBBD5619          Front Panel
Display
PDU 0            Rev 04   740-048336   1GB93470043       High Capacity DC PDU
  PSM 0          Rev 04   740-046988   1GB63500184       High Capacity DC PSM
  PSM 2          Rev 04   740-046988   1GB63500169       High Capacity DC PSM
  PSM 4          Rev 04   740-046988   1GB63500306       High Capacity DC PSM
  PSM 6          Rev 04   740-046988   1GB63500074       High Capacity DC PSM
PDU 1            Rev 04   740-048336   1GB93470045       High Capacity DC PDU
  PSM 1          Rev 04   740-046988   1GB63500193       High Capacity DC PSM
  PSM 3          Rev 04   740-046988   1GB63500143       High Capacity DC PSM
  PSM 5          Rev 04   740-046988   1GB63500146       High Capacity DC PSM
  PSM 7          Rev 04   740-046988   1GB63500192       High Capacity DC PSM
CCG 0            REV 09   750-030653   BBBC1909          Clock Generator
CCG 1            REV 09   750-030653   BBBD2970          Clock Generator
...
```

show chassis hardware clei-models (PTX5000 Packet Transport Router)

```
user@host> show chassis hardware clei-models
Hardware inventory:
Item             Version  Part number  CLEI code         FRU model number
FPM              REV 08   760-030647   PROTOXCLEI        CRAFT-PTX5000-S
```

```
PDU 0            Rev 05   740-032019   IPUPAHLKAA        PWR-SAN-PDU-DC
  PSM 0          Rev 05   740-032022   IPUPAHNKAA        PSM-PTX-DC-120-S
  PSM 1          Rev 04   740-032022   032022XXXX        PWR-SAN-12-DC
  PSM 2          Rev 04   740-032022   032022XXXX        PWR-SAN-12-DC
  PSM 3          Rev 05   740-032022   IPUPAHNKAA        PSM-PTX-DC-120-S
CCG 0            REV 04   750-030653   PROTOXCLEI        CCG-PTX-S
CCG 1            REV 04   750-030653   PROTOXCLEI        CCG-PTX-S
Routing Engine 0 REV 05   740-026942                     RE-DUO-C2600-16G-S
Routing Engine 1 REV 06   740-026942                     RE-DUO-C2600-16G-S
CB 0             REV 08   750-030625   PROTOXCLEI        CB-PTX-S
CB 1             REV 08   750-030625   PROTOXCLEI        CB-PTX-S
FPC 0            REV 18   750-036844   PROTOXCLEI        FPC-PTX-P1-A
FPC 2            REV 13   750-036844   PROTOXCLEI        FPC-PTX-P1-A
  PIC 0          REV 14   750-031913   PROTOXCLEI        P1-PTX-24-10GE-SFPP
FPC 3            REV 13   750-036844   PROTOXCLEI        FPC-PTX-P1-A
FPC 5
  PIC 0          REV 14   750-031913   PROTOXCLEI        P1-PTX-24-10GE-SFPP
FPC 6            REV 18   750-036844   PROTOXCLEI        FPC-PTX-P1-A
FPC 7            REV 18   750-036844   PROTOXCLEI        FPC-PTX-P1-A
SIB 0            REV 07   750-030631   PROTOXCLEI        SIB-I-PTX5008
SIB 1            REV 07   750-030631   PROTOXCLEI        SIB-I-PTX5008
SIB 2            REV 07   750-030631   PROTOXCLEI        SIB-I-PTX5008
SIB 3            REV 07   750-030631   PROTOXCLEI        SIB-I-PTX5008
SIB 4            REV 07   750-030631   PROTOXCLEI        SIB-I-PTX5008
SIB 5            REV 07   750-030631   PROTOXCLEI        SIB-I-PTX5008
SIB 6            REV 07   750-030631   PROTOXCLEI        SIB-I-PTX5008
SIB 7            REV 07   750-030631   PROTOXCLEI        SIB-I-PTX5008
SIB 8            REV 07   750-030631   PROTOXCLEI        SIB-I-PTX5008
Fan Tray 1       REV 04   760-030642   PROTOXCLEI        FAN-PTX-H-S
```

show chassis hardware clei-models (PTX5000 Packet Transport Router with AC PSM and PDU)

```
user@host> show chassis hardware clei-models
Hardware inventory:
Item             Version  Part number  CLEI code         FRU model number
Midplane         REV 16   750-035893   IPMUN00ARA        CHAS-MP-PTX5000-S
FPM              REV 12   760-030647   IPUCA7SCAA        CRAFT-PTX5000-S
PDU 0            Rev 01   740-048338   PROTOACPDU        PDU2-PTX-AC-W
  PSM 0          Rev 01   740-048334   PROTOACPSM        PSM2-PTX-AC
  PSM 1          Rev 01   740-048334   PROTOACPSM        PSM2-PTX-AC
  PSM 2          Rev 01   740-048334   PROTOACPSM        PSM2-PTX-AC
  PSM 3          Rev 01   740-048334   PROTOACPSM        PSM2-PTX-AC
  PSM 4          Rev 01   740-048334   PROTOACPSM        PSM2-PTX-AC
  PSM 5          Rev 01   740-048334   PROTOACPSM        PSM2-PTX-AC
  PSM 6          Rev 01   740-048334   PROTOACPSM        PSM2-PTX-AC
  PSM 7          Rev 01   740-048334   PROTOACPSM        PSM2-PTX-AC
PDU 1            Rev 01   740-048338   PROTOACPDU        PDU2-PTX-AC-W
  PSM 0          Rev 01   740-048334   PROTOACPSM        PSM2-PTX-AC
  PSM 1          Rev 01   740-048334   PROTOACPSM        PSM2-PTX-AC
  PSM 2          Rev 01   740-048334   PROTOACPSM        PSM2-PTX-AC
  PSM 3          Rev 01   740-048334   PROTOACPSM        PSM2-PTX-AC
  PSM 4          Rev 01   740-048334   PROTOACPSM        PSM2-PTX-AC
  PSM 5          Rev 01   740-048334   PROTOACPSM        PSM2-PTX-AC
  PSM 6          Rev 01   740-048334   PROTOACPSM        PSM2-PTX-AC
  PSM 7          Rev 01   740-048334   PROTOACPSM        PSM2-PTX-AC
CCG 0            REV 09   750-030653   IPUCA7DCAA        CCG-PTX-S
...
```

show chassis hardware clei-models (PTX5000 Packet Transport Router with FPC2-PTX-P1A)

```
user@host> show chassis hardware clei-models
Hardware inventory:
Item             Version  Part number  CLEI code         FRU model number
Midplane         REV 11   750-035893   IPMUN00ARA        CHAS-MP-PTX5000-S
FPM              REV 12   760-030647   IPUCA7SCAA        CRAFT-PTX5000-S
PDU 0            Rev 04   740-048336   IPUPAL7KAA        PDU2-PTX-DC-S
  PSM 0          Rev 04   740-046988   IPUPAL8KAA        PSM2-PTX-DC-S
  PSM 2          Rev 04   740-046988   IPUPAL8KAA        PSM2-PTX-DC-S
  PSM 4          Rev 04   740-046988   IPUPAL8KAA        PSM2-PTX-DC-S
  PSM 6          Rev 04   740-046988   IPUPAL8KAA        PSM2-PTX-DC-S
PDU 1            Rev 04   740-048336   IPUPAL7KAA        PDU2-PTX-DC-S
  PSM 1          Rev 04   740-046988   IPUPAL8KAA        PSM2-PTX-DC-S
  PSM 3          Rev 04   740-046988   IPUPAL8KAA        PSM2-PTX-DC-S
  PSM 5          Rev 04   740-046988   IPUPAL8KAA        PSM2-PTX-DC-S
  PSM 7          Rev 04   740-046988   IPUPAL8KAA        PSM2-PTX-DC-S
CCG 0            REV 09   750-030653   IPUCA7DCAA        CCG-PTX-S
CCG 1            REV 09   750-030653   IPUCA7DCAA        CCG-PTX-S
...
```

show chassis hardware detail (PTX5000 Packet Transport Router)

```
user@host> show chassis hardware detail
Hardware inventory:
Item             Version  Part number  Serial number     Description
Chassis                               JN11D1FD7AJA      PTX5000
Midplane         REV 03   711-031896   ABAC5589          Midplane-8S
FPM              REV 08   760-030647   EG1679            Front Panel Display
PDU 0            Rev 05   740-032019   ZE00006           DC Power Dist Unit
  PSM 0          Rev 05   740-032022   ZJ00018           DC 12V Power Supply
  PSM 1          Rev 04   740-032022   ZC00052           DC 12V Power Supply
  PSM 2          Rev 04   740-032022   ZD00051           DC 12V Power Supply
  PSM 3          Rev 05   740-032022   ZJ00060           DC 12V Power Supply
CCG 0            REV 04   750-030653   EG3703            Clock Generator
CCG 1            REV 04   750-030653   EG3698            Clock Generator
Routing Engine 0 REV 05   740-026942   P737A-002231      RE-DUO-2600
  ad0    3823 MB  SMART CF             201006190039C02DC02D Compact Flash
  ad1   62720 MB  SMART Lite SATA Drive 2011042300CF4C6B4C6B Disk 1
Routing Engine 1 REV 06   740-026942   P737A-002438      RE-DUO-2600
  ad0    3823 MB  SMART CF             20100619053455F055F0 Compact Flash
  ad1   62720 MB  SMART Lite SATA Drive 20110423000AE8E7E8E7 Disk 1
CB 0             REV 08   750-030625   EG5519            Control Board
CB 1             REV 08   750-030625   EG5516            Control Board
FPC 0            REV 18   750-036844   EJ3080            FPC
  CPU            REV 12   711-030686   EJ3260            SNG PMB
FPC 2            REV 13   750-036844   EG5065            FPC
  CPU            REV 09   711-030686   EG4082            SNG PMB
  PIC 0          REV 14   750-031913   EG5127            24x 10GE(LAN) SFP+
    Xcvr 0       REV 01   740-031980   143363A00240      SFP+-10G-SR
    Xcvr 1       REV 01   740-031981   UK90PZ1           SFP+-10G-LR
    Xcvr 2       REV 01   740-031980   AD1141A04XH       SFP+-10G-SR
    Xcvr 3       REV 01   740-031981   UK90Q46           SFP+-10G-LR
    Xcvr 4       REV 01   740-031980   AD1141A04X4       SFP+-10G-SR
    Xcvr 6       REV 01   740-031980   B11H02560         SFP+-10G-SR
    Xcvr 7       REV 01   740-031980   B11C01589         SFP+-10G-SR
    Xcvr 8       REV 01   740-031980   AD1141A04XF       SFP+-10G-SR
    Xcvr 10      REV 01   740-031980   123363A01094      SFP+-10G-SR
    Xcvr 11      REV 01   740-031980   AK80LKF           SFP+-10G-SR
    Xcvr 12      REV 01   740-031980   183363A01528      SFP+-10G-SR
```

```
    Xcvr 14      REV 01   740-031980   193363A01079      SFP+-10G-SR
    Xcvr 15      REV 01   740-031980   AK80MC8           SFP+-10G-SR
    Xcvr 16      REV 01   740-031980   AJC0BHC           SFP+-10G-SR
    Xcvr 19      REV 01   740-021309   J08D26856         SFP+-10G-LR
    Xcvr 21      REV 01   740-031980   AK80KCT           SFP+-10G-SR
    Xcvr 22      REV 01   740-031981   UK90PZL           SFP+-10G-LR
    Xcvr 23      REV 01   740-031980   AK80N1V           SFP+-10G-SR
FPC 3            REV 13   750-036844   EG5074            FPC
  CPU            REV 09   711-030686   EG4064            SNG PMB
  PIC 1          REV 10   750-031903   EG0325            SNG Load
FPC 5            REV 06   750-036844   EH3198            FPC
  CPU
  PIC 0          REV 14   750-031913   EG5134            24x 10GE(LAN) SFP+
    Xcvr 0       REV 01   740-031980   AK80LBH           SFP+-10G-SR
    Xcvr 1       REV 01   740-031980   B11B03724         SFP+-10G-SR
    Xcvr 2       REV 01   740-031980   AK80FMH           SFP+-10G-SR
    Xcvr 5       REV 01   740-031980   B11J00818         SFP+-10G-SR
    Xcvr 6       REV 01   740-031980   193363A00743      SFP+-10G-SR
    Xcvr 7       REV 01   740-031980   B11B06125         SFP+-10G-SR
    Xcvr 10      REV 01   740-031980   B11H02529         SFP+-10G-SR
    Xcvr 11      REV 01   740-031980   AK80LFB           SFP+-10G-SR
    Xcvr 12      REV 01   740-031980   193363A01061      SFP+-10G-SR
    Xcvr 15      REV 01   740-031980   B11J00687         SFP+-10G-SR
    Xcvr 16      REV 01   740-031980   193363A00738      SFP+-10G-SR
    Xcvr 18      REV 01   740-031980   AK80MQX           SFP+-10G-SR
    Xcvr 19      REV 01   740-021309   J08C17257         SFP+-10G-LR
    Xcvr 22      REV 01   740-031980   B11J00730         SFP+-10G-SR
    Xcvr 23      REV 01   740-031980   AK80KEE           SFP+-10G-SR
  PIC 1          REV 08   750-036710   EG3105            2x 40GE CFP
    Xcvr 0       REV 01   740-034554   B260HLT           CFP-40G-LR4
    Xcvr 1       REV 01   740-034554   B11C02847         CFP-40G-LR4
FPC 6            REV 18   750-036844   EJ4391            FPC
  CPU            REV 12   711-030686   EJ3257            SNG PMB
FPC 7            REV 18   750-036844   EJ4382            FPC
  CPU            REV 12   711-030686   EJ3238            SNG PMB
SPMB 0           REV 10   711-030686   EG5418            SNG PMB
SPMB 1           REV 09   711-030686   EG5373            SNG PMB
SIB 0            REV 07   750-030631   EG4858            SIB-I-8S
SIB 1            REV 07   750-030631   EG4872            SIB-I-8S
SIB 2            REV 07   750-030631   EG4866            SIB-I-8S
SIB 3            REV 07   750-030631   EG6011            SIB-I-8S
SIB 4            REV 07   750-030631   EG4907            SIB-I-8S
SIB 5            REV 07   750-030631   EG4879            SIB-I-8S
SIB 6            REV 07   750-030631   EG4864            SIB-I-8S
SIB 7            REV 07   750-030631   EG4899            SIB-I-8S
SIB 8            REV 07   750-030631   EG4880            SIB-I-8S
Fan Tray 0       REV 04   760-032784   EG1496            Vertical Fan Tray
Fan Tray 1       REV 04   760-030642   EG1335            Horizontal Fan Tray
Fan Tray 2       REV 02   760-030642   ED4952            Horizontal Fan Tray
```

show chassis hardware detail (PTX5000 Packet Transport Router with AC PSM and PDU)

```
user@host> show chassis hardware detail
Hardware inventory:
Item             Version  Part number  Serial number     Description
Chassis                                JN12223A6AJA      PTX5000
Midplane         REV 16   750-035893   ACRA1350          Midplane-8S
FPM              REV 12   760-030647   BBBD5625          Front Panel Display
PDU 0           Rev 01   740-048338   1GB83360005       High Capacity AC WYE PDU

  PSM 0          Rev 01   740-048334   1GB43360074       High Capacity AC PSM
```

```
  PSM 1          Rev 01   740-048334   1GB43360001       High Capacity AC PSM
  PSM 2          Rev 01   740-048334   1GB43360104       High Capacity AC PSM
  PSM 3          Rev 01   740-048334   1GB43360042       High Capacity AC PSM
  PSM 4          Rev 01   740-048334   1GB43360068       High Capacity AC PSM
  PSM 5          Rev 01   740-048334   1GB43360080       High Capacity AC PSM
  PSM 6          Rev 01   740-048334   1GB43360046       High Capacity AC PSM
  PSM 7          Rev 01   740-048334   1GB43360100       High Capacity AC PSM
PDU 1           Rev 01   740-048338   1GB83360006       High Capacity AC WYE PDU

  PSM 0          Rev 01   740-048334   1GB43360069       High Capacity AC PSM
  PSM 1          Rev 01   740-048334   1GB43360099       High Capacity AC PSM
  PSM 2          Rev 01   740-048334   1GB43360050       High Capacity AC PSM
  PSM 3          Rev 01   740-048334   1GB43360095       High Capacity AC PSM
  PSM 4          Rev 01   740-048334   1GB43360101       High Capacity AC PSM
  PSM 5          Rev 01   740-048334   1GB43360075       High Capacity AC PSM
  PSM 6          Rev 01   740-048334   1GB43360047       High Capacity AC PSM
  PSM 7          Rev 01   740-048334   1GB43360019       High Capacity AC PSM
CCG 0            REV 09   750-030653   BBAZ5345          Clock Generator
```

show chassis hardware detail (PTX5000 Packet Transport Router with FPC2-PTX-P1A)

```
user@host> show chassis hardware detail
Hardware inventory:
Item             Version  Part number  Serial number     Description
Chassis                                JN1204FC0AJA      PTX5000
Midplane         REV 11   750-035893   ACAB8038          Midplane-8S
FPM              REV 12   760-030647   BBBD5619          Front Panel
Display
PDU 0            Rev 04   740-048336   1GB93470043       High Capacity DC PDU
  PSM 0          Rev 04   740-046988   1GB63500184       High Capacity DC PSM
  PSM 2          Rev 04   740-046988   1GB63500169       High Capacity DC PSM
  PSM 4          Rev 04   740-046988   1GB63500306       High Capacity DC PSM
  PSM 6          Rev 04   740-046988   1GB63500074       High Capacity DC PSM
PDU 1            Rev 04   740-048336   1GB93470045       High Capacity DC PDU
  PSM 1          Rev 04   740-046988   1GB63500193       High Capacity DC PSM
  PSM 3          Rev 04   740-046988   1GB63500143       High Capacity DC PSM
  PSM 5          Rev 04   740-046988   1GB63500146       High Capacity DC PSM
  PSM 7          Rev 04   740-046988   1GB63500192       High Capacity DC PSM
CCG 0            REV 09   750-030653   BBBC1909          Clock Generator
CCG 1            REV 09   750-030653   BBBD2970          Clock Generator
...
```

show chassis hardware models (PTX5000 Packet Transport Router)

```
user@host> show chassis hardware models
Hardware inventory:
Item             Version  Part number  Serial number     FRU model number
FPM              REV 08   760-030647   EG1679            CRAFT-PTX5000-S
PDU 0            Rev 05   740-032019   ZE00006           PWR-SAN-PDU-DC
  PSM 0          Rev 05   740-032022   ZJ00018           PSM-PTX-DC-120-S
  PSM 1          Rev 04   740-032022   ZC00052           PWR-SAN-12-DC
  PSM 2          Rev 04   740-032022   ZD00051           PWR-SAN-12-DC
  PSM 3          Rev 05   740-032022   ZJ00060           PSM-PTX-DC-120-S
CCG 0            REV 04   750-030653   EG3703            CCG-PTX-S
CCG 1            REV 04   750-030653   EG3698            CCG-PTX-S
Routing Engine 0 REV 05   740-026942   P737A-002231      RE-DUO-C2600-16G-S
Routing Engine 1 REV 06   740-026942   P737A-002438      RE-DUO-C2600-16G-S
CB 0             REV 08   750-030625   EG5519            CB-PTX-S
CB 1             REV 08   750-030625   EG5516            CB-PTX-S
FPC 0            REV 18   750-036844   EJ3080            FPC-PTX-P1-A
```

```
FPC 2            REV 13   750-036844   EG5065            FPC-PTX-P1-A
  PIC 0          REV 14   750-031913   EG5127            P1-PTX-24-10GE-SFPP
FPC 3            REV 13   750-036844   EG5074            FPC-PTX-P1-A
FPC 5
  PIC 0          REV 14   750-031913   EG5134            P1-PTX-24-10GE-SFPP
FPC 6            REV 18   750-036844   EJ4391            FPC-PTX-P1-A
FPC 7            REV 18   750-036844   EJ4382            FPC-PTX-P1-A
SIB 0            REV 07   750-030631   EG4858            SIB-I-PTX5008
SIB 1            REV 07   750-030631   EG4872            SIB-I-PTX5008
SIB 2            REV 07   750-030631   EG4866            SIB-I-PTX5008
SIB 3            REV 07   750-030631   EG6011            SIB-I-PTX5008
SIB 4            REV 07   750-030631   EG4907            SIB-I-PTX5008
SIB 5            REV 07   750-030631   EG4879            SIB-I-PTX5008
SIB 6            REV 07   750-030631   EG4864            SIB-I-PTX5008
SIB 7            REV 07   750-030631   EG4899            SIB-I-PTX5008
SIB 8            REV 07   750-030631   EG4880            SIB-I-PTX5008
Fan Tray 1       REV 04   760-030642   EG1335            FAN-PTX-H-S
```

show chassis hardware models (PTX5000 Packet Transport Router with AC PSM and PDU)

```
user@host> show chassis hardware models
Hardware inventory:
Item             Version  Part number  Serial number     FRU model number
Midplane         REV 16   750-035893   ACRA1350          CHAS-MP-PTX5000-S
FPM              REV 12   760-030647   BBBD5625          CRAFT-PTX5000-S
PDU 0            Rev 01   740-048338   1GB83360005       PDU2-PTX-AC-W
  PSM 0          Rev 01   740-048334   1GB43360074       PSM2-PTX-AC
  PSM 1          Rev 01   740-048334   1GB43360001       PSM2-PTX-AC
  PSM 2          Rev 01   740-048334   1GB43360104       PSM2-PTX-AC
  PSM 3          Rev 01   740-048334   1GB43360042       PSM2-PTX-AC
  PSM 4          Rev 01   740-048334   1GB43360068       PSM2-PTX-AC
  PSM 5          Rev 01   740-048334   1GB43360080       PSM2-PTX-AC
  PSM 6          Rev 01   740-048334   1GB43360046       PSM2-PTX-AC
  PSM 7          Rev 01   740-048334   1GB43360100       PSM2-PTX-AC
PDU 1            Rev 01   740-048338   1GB83360006       PDU2-PTX-AC-W
  PSM 0          Rev 01   740-048334   1GB43360069       PSM2-PTX-AC
  PSM 1          Rev 01   740-048334   1GB43360099       PSM2-PTX-AC
  PSM 2          Rev 01   740-048334   1GB43360050       PSM2-PTX-AC
  PSM 3          Rev 01   740-048334   1GB43360095       PSM2-PTX-AC
  PSM 4          Rev 01   740-048334   1GB43360101       PSM2-PTX-AC
  PSM 5          Rev 01   740-048334   1GB43360075       PSM2-PTX-AC
  PSM 6          Rev 01   740-048334   1GB43360047       PSM2-PTX-AC
  PSM 7          Rev 01   740-048334   1GB43360019       PSM2-PTX-AC
CCG 0            REV 09   750-030653   BBAZ5345          CCG-PTX-S
...
```

show chassis hardware models (PTX5000 Packet Transport Router with FPC2-PTX-P1A)

```
user@host> show chassis hardware models
Hardware inventory:
Item             Version  Part number  Serial number     FRU model number
Midplane         REV 11   750-035893   ACAB8038          CHAS-MP-PTX5000-S
FPM              REV 12   760-030647   BBBD5619          CRAFT-PTX5000-S
PDU 0            Rev 04   740-048336   1GB93470043       PDU2-PTX-DC-S
  PSM 0          Rev 04   740-046988   1GB63500184       PSM2-PTX-DC-S
  PSM 2          Rev 04   740-046988   1GB63500169       PSM2-PTX-DC-S
  PSM 4          Rev 04   740-046988   1GB63500306       PSM2-PTX-DC-S
  PSM 6          Rev 04   740-046988   1GB63500074       PSM2-PTX-DC-S
PDU 1            Rev 04   740-048336   1GB93470045       PDU2-PTX-DC-S
  PSM 1          Rev 04   740-046988   1GB63500193       PSM2-PTX-DC-S
```

```
  PSM 3          Rev 04   740-046988   1GB63500143       PSM2-PTX-DC-S
  PSM 5          Rev 04   740-046988   1GB63500146       PSM2-PTX-DC-S
  PSM 7          Rev 04   740-046988   1GB63500192       PSM2-PTX-DC-S
CCG 0            REV 09   750-030653   BBBC1909          CCG-PTX-S
CCG 1            REV 09   750-030653   BBBD2970          CCG-PTX-S
...
```

show chassis hardware extensive (PTX5000 Packet Transport Router)

```
user@host> show chassis hardware extensive
Hardware inventory:
Item             Version  Part number  Serial number     Description
...............
PDU 0            Rev 04   740-032019   UE0003            DC Power Dist Unit
 Jedec Code:   0x7fb0            EEPROM Version:    0x02
 P/N:          740-032019        S/N:               UE0003
 Assembly ID:  0x043d            Assembly Version:  04.00
 Date:         11-29-2010        Assembly Flags:    0x00
 Version:      Rev 04            CLEI Code:         032022XXXX
 ID: DC Power Dist Unit          FRU Model Number:  PWR-SAN-PDU-DC
 Board Information Record:
  Address 0x00: ff ff ff ff ff ff ff ff ff ff ff ff ff ff ff ff
 I2C Hex Data:
  Address 0x00: 7f b0 02 ff 04 3d 04 00 52 65 76 20 30 34 00 00
  Address 0x10: 00 00 00 00 37 34 30 2d 30 33 32 30 31 39 00 00
  Address 0x20: 53 2f 4e 20 55 45 30 30 30 33 00 00 00 1d 0b 07
  Address 0x30: da ff ff ff ff ff ff ff ff ff ff ff ff ff ff ff
  Address 0x40: ff ff ff ff 01 30 33 32 30 32 32 58 58 58 58 50
  Address 0x50: 57 52 2d 53 41 4e 2d 50 44 55 2d 44 43 00 00 00
  Address 0x60: 00 00 00 00 00 00 00 00 00 00 00 00 00 00 00 00
  Address 0x70: 00 00 00 a3 ff ff ff ff ff ff ff ff ff ff ff ff
  PSM 0          Rev 04   740-032022   YG00065           DC 12V Power Supply
Module
 Jedec Code:   0x7fb0            EEPROM Version:    0x02
 P/N:          740-032022        S/N:               YG00065
 Assembly ID:  0x0440            Assembly Version:  04.00
 Date:         07-30-2010        Assembly Flags:    0x00
 Version:      Rev 04            CLEI Code:         032022XXXX
 ID: DC 12V Power Supply Module  FRU Model Number:  PWR-SAN-12-DC
 Board Information Record:
  Address 0x00: ff ff ff ff ff ff ff ff ff ff ff ff ff ff ff ff
 I2C Hex Data:
  Address 0x00: 7f b0 02 ff 04 40 04 00 52 65 76 20 30 34 00 00
  Address 0x10: 00 00 00 00 37 34 30 2d 30 33 32 30 32 32 00 00
  Address 0x20: 53 2f 4e 20 59 47 30 30 30 36 35 00 00 1e 07 07
  Address 0x30: da ff ff ff ff ff ff ff ff ff ff ff ff ff ff ff
  Address 0x40: ff ff ff ff 01 30 33 32 30 32 32 58 58 58 58 50
  Address 0x50: 57 52 2d 53 41 4e 2d 31 32 2d 44 43 20 20 20 20
  Address 0x60: 20 20 20 20 20 20 01 00 ff ff ff ff ff ff ff ff
  Address 0x70: ff ff ff 0c ff ff ff ff ff ff ff ff ff ff ff ff
```

show chassis hardware extensive (PTX1000 Packet Transport Router)

```
user@host> show chassis hardware extensive
Hardware inventory:
Item             Version  Part number  Serial number     Description
Chassis                                UNDEFINED         PTX1000
Pseudo CB 0
Routing Engine 0          BUILTIN      BUILTIN           RE-PTX1000
FPC 0            REV 06   750-053330   ACAM4850          PTX1000-FPC-P2-BUILTIN
```

```
  CPU                     BUILTIN      BUILTIN           FPC CPU
  PIC 0                  BUILTIN      BUILTIN          288X10GE/72X40GE/24X100GE

    Xcvr 2       REV 01   740-046565   QE240845          QSFP+-40G-SR4
    Xcvr 3       REV 01   740-046565   QE240962          QSFP+-40G-SR4
    Xcvr 5       REV 01   740-032986   ES400LZ           QSFP+-40G-SR4
    Xcvr 12      REV 01   740-054053   QE419452          QSFP+-4X10G-SR
    Xcvr 18      REV 01   740-054053   QE419481          QSFP+-4X10G-SR
    Xcvr 30      REV 01   740-046565   QE440485          QSFP+-40G-SR4
    Xcvr 48      REV 01   740-032986   ES400K3           QSFP+-40G-SR4
    Xcvr 68      REV 01   740-046565   QF2805J3          QSFP+-40G-SR4
  Mezz           REV 05   711-053333   ACAM4282          Mezzanine Board
Power Supply 2   REV 01   740-054405   1EDN4470131       AC AFO 1600W PSU
Power Supply 3   REV 01   740-054405   1EDN4470112       AC AFO 1600W PSU
Fan Tray 0                                             PTX1000 Fan Tray 0, Front
 to Back Airflow - AFO
Fan Tray 1                                             PTX1000 Fan Tray 1, Front
 to Back Airflow - AFO
Fan Tray 2                                             PTX1000 Fan Tray 2, Front
 to Back Airflow - AFO
```

show chassis hardware extensive (PTX5000 with Control Board 2)

```
user@host> show chassis hardware grep CB
CB 0             REV 06   750-055537   ACLZ9541          Control Board 2
CB 1             REV 06   750-055537   ACLY5329          Control Board 2
```

show chassis hardware (MX Routers with Media Services Blade [MSB])

```
user@switch> show chassis hardware
Hardware inventory:
Item             Version  Part number  Serial number     Description
Chassis                                JN1100FB1AFB      MX480
Midplane         REV 05   710-017414   TR3310            MX480 Midplane
FPM Board        REV 02   710-017254   KG1872            Front Panel Display
PEM 2            Rev 02   740-017343   QCS0812A00N       DC Power Entry Module
PEM 3            Rev 02   740-017343   QCS0812A00U       DC Power Entry Module
Routing Engine 0 REV 07   740-015113   1000740938        RE-S-1300
CB 0             REV 03   710-021523   KF4630            MX SCB
FPC 1            REV 11   750-037207   ZW9726            AS-MCC
  CPU            REV 04   711-038173   ZW4819            AS-MCC PMB
  MIC 0          REV 06   750-037214   ZW3574            AS-MSC
    PIC 0                 BUILTIN      BUILTIN           AS-MSC
  MIC 1          REV 00   750-037211                     AS-MXC
    PIC 2                 BUILTIN      BUILTIN           AS-MXC
```

show chassis hardware extensive (MX Routers with Media Services Blade [MSB])

```
user@switch> show chassis hardware extensive
FPC 1            REV 11   750-037207   ZW9726            AS-MCC
 Jedec Code:   0x7fb0            EEPROM Version:    0x02
 P/N:          750-037207        S/N:               ZW9726
 Assembly ID:  0x0b37            Assembly Version:  01.11
 Date:         02-17-2012        Assembly Flags:    0x00
 Version:      REV 11            CLEI Code:         PROTOXCLEI
 ID: AS-MCC          FRU Model Number:  750-037207
 Board Information Record:
  Address 0x00: ff ff ff ff ff ff ff ff ff ff ff ff ff ff ff ff
 I2C Hex Data:
```

```
 Address 0x00: 7f b0 02 ff 0b 37 01 0b 52 45 56 20 31 31 00 00
 Address 0x10: 00 00 00 00 37 35 30 2d 30 33 37 32 30 37 00 00
 Address 0x20: 53 2f 4e 20 5a 57 39 37 32 36 00 00 00 11 02 07
 Address 0x30: dc ff ff ff ff ff ff ff ff ff ff ff ff ff ff ff
 Address 0x40: ff ff ff ff 01 50 52 4f 54 4f 58 43 4c 45 49 37
 Address 0x50: 35 30 2d 30 33 37 32 30 37 00 00 00 00 00 00 00
 Address 0x60: 00 00 00 00 00 00 31 31 00 ff ff ff ff ff ff ff
 Address 0x70: ff ff ff 5e ff ff ff ff ff ff ff ff ff ff ff ff
 CPU            REV 04   711-038173   ZW4819            AS-MCC-PMB
Jedec Code:   0x7fb0            EEPROM Version:    0x02
P/N:          711-038173        S/N:               ZW4819
Assembly ID:  0x0b38            Assembly Version:  01.04
Date:         12-30-2011        Assembly Flags:    0x00
Version:      REV 04
ID: AS-MCC PMB
Board Information Record:
 Address 0x00: ff ff ff ff ff ff ff ff ff ff ff ff ff ff ff ff
I2C Hex Data:
 Address 0x00: 7f b0 02 ff 0b 38 01 04 52 45 56 20 30 34 00 00
 Address 0x10: 00 00 00 00 37 31 31 2d 30 33 38 31 37 33 00 00
 Address 0x20: 53 2f 4e 20 5a 57 34 38 31 39 00 00 00 1e 0c 07
 Address 0x30: db ff ff ff ff ff ff ff ff ff ff ff ff ff ff ff
 Address 0x40: ff ff ff ff 00 50 52 4f 54 4f 58 43 4c 45 49 37
 Address 0x50: 31 31 2d 30 33 38 31 37 33 00 00 00 00 00 00 00
 Address 0x60: 00 00 00 00 00 00 30 34 00 ff ff ff ff ff ff ff
 Address 0x70: ff ff ff 60 00 00 00 00 00 00 00 00 00 00 00 00
 MIC 0          REV 06   750-037214   ZW3574            AS-MSC
Jedec Code:   0x7fb0            EEPROM Version:    0x02
P/N:          750-037214        S/N:               ZW3574
Assembly ID:  0x0a44            Assembly Version:  01.06
Date:         02-19-2012        Assembly Flags:    0x00
Version:      REV 06            CLEI Code:         PROTOXCLEI
ID: AS-MSC          FRU Model Number:  750-037214
Board Information Record:
 Address 0x00: ff ff ff ff ff ff ff ff ff ff ff ff ff ff ff ff
I2C Hex Data:
 Address 0x00: 7f b0 02 ff 0a 44 01 06 52 45 56 20 30 36 00 00
 Address 0x10: 00 00 00 00 37 35 30 2d 30 33 37 32 31 34 00 00
 Address 0x20: 53 2f 4e 20 5a 57 33 35 37 34 00 00 00 13 02 07
 Address 0x30: dc ff ff ff ff ff ff ff ff ff ff ff ff ff ff ff
 Address 0x40: ff ff ff ff 01 50 52 4f 54 4f 58 43 4c 45 49 37
 Address 0x50: 35 30 2d 30 33 37 32 31 34 00 00 00 00 00 00 00
 Address 0x60: 00 00 00 00 00 00 30 36 00 ff ff ff ff ff ff ff
 Address 0x70: ff ff ff 60 c0 03 e5 f4 00 00 00 00 00 00 00 00
   PIC 0                 BUILTIN      BUILTIN           AS-MSC
 MIC 1          REV 00   750-037211                     AS-MXC
Jedec Code:   0x7fb0            EEPROM Version:    0x01
P/N:          750-037211
Assembly ID:  0x0a43            Assembly Version:  01.00
Date:         255-255-65535     Assembly Flags:    0x00
Version:      REV 00
ID: AS-MXC
Board Information Record:
 Address 0x00: ff ff ff ff ff ff ff ff ff ff ff ff ff ff ff ff
I2C Hex Data:
 Address 0x00: 7f b0 01 ff 0a 43 01 00 52 45 56 20 30 30 00 00
 Address 0x10: 00 00 00 00 37 35 30 2d 30 33 37 32 31 31 00 00
 Address 0x20: 00 00 00 00 00 00 00 00 00 00 00 00 00 ff ff ff
 Address 0x30: ff ff ff ff ff ff ff ff ff ff ff ff ff ff ff ff
 Address 0x40: ff ff ff ff 00 ff ff ff ff ff ff ff ff ff ff ff
 Address 0x50: ff ff ff ff ff ff ff ff ff ff ff ff ff ff ff ff
```

```
  Address 0x60: ff ff ff ff ff ff ff ff ff ff ff ff ff ff ff ff
  Address 0x70: ff ff ff ff c0 02 e6 6c 7f b0 02 ff 0a 44 01 06
    PIC 2                 BUILTIN      BUILTIN           AS-MXC
```

show chassis hardware (ACX5048 Router)

```
user@host> show chassis hardware
Hardware inventory:
Item             Version  Part number  Serial number     Description
Chassis                                VF3714170810      ACX5048
Pseudo CB 0
Routing Engine 0          BUILTIN      BUILTIN           ACX5K Routing Engine
FPC 0            REV 05   650-056267   VF3714170810      ACX5048
  CPU                     BUILTIN      BUILTIN           FPC CPU
  PIC 0                   BUILTIN      BUILTIN           48x10G-6x40G
    Xcvr 0       REV 02   740-011613   NR2051S           SFP-SX
    Xcvr 33      REV 01   740-030589   SE5N290041        SFP+-10G-LPBK
    Xcvr 35      REV 01   740-030589   SE5N290926        SFP+-10G-LPBK
    Xcvr 37      REV 01   740-030589   SE5N290049        SFP+-10G-LPBK
    Xcvr 39      REV 01   740-030589   SE5N290046        SFP+-10G-LPBK
    Xcvr 48               NON-JNPR     409310098         UNKNOWN
Power Supply 1   REV 03   740-041741   1GA24081097       JPSU-650W-AC-AFO
Fan Tray 0                                               ACX5K Fan Tray 0, Front
 to Back Airflow - AFO
Fan Tray 1                                               ACX5K Fan Tray 1, Front
 to Back Airflow - AFO
Fan Tray 2                                               ACX5K Fan Tray 2, Front
 to Back Airflow - AFO
Fan Tray 3                                               ACX5K Fan Tray 3, Front
 to Back Airflow - AFO
Fan Tray 4                                               ACX5K Fan Tray 4, Front
 to Back Airflow - AFO
```

show chassis hardware detail (ACX5048 Router)

```
user@host> show chassis hardware detail
Hardware inventory:
Item             Version  Part number  Serial number     Description
Chassis                                VF3714170810      ACX5048
Pseudo CB 0
Routing Engine 0          BUILTIN      BUILTIN           ACX5K Routing Engine
  ad0     509 MB  QEMU HARDDISK        QM00001           Hard Disk
  ad1    4095 MB  QEMU HARDDISK        QM00002           Hard Disk
  ad2     511 MB  QEMU HARDDISK        QM00003           Hard Disk
  ad3    1023 MB  QEMU HARDDISK        QM00004           Hard Disk
  usb0 (addr 1)  product 0x0000 0      vendor 0x0000     uhub1
  usb0 (addr 2)  product 0x0020 32     vendor 0x8087     uhub2
FPC 0            REV 05   650-056267   VF3714170810      ACX5048
  CPU                     BUILTIN      BUILTIN           FPC CPU
  PIC 0                   BUILTIN      BUILTIN           48x10G-6x40G
    Xcvr 0       REV 02   740-011613   NR2051S           SFP-SX
    Xcvr 33      REV 01   740-030589   SE5N290041        SFP+-10G-LPBK
    Xcvr 35      REV 01   740-030589   SE5N290926        SFP+-10G-LPBK
    Xcvr 37      REV 01   740-030589   SE5N290049        SFP+-10G-LPBK
    Xcvr 39      REV 01   740-030589   SE5N290046        SFP+-10G-LPBK
    Xcvr 48               NON-JNPR     409310098         UNKNOWN
Power Supply 1   REV 03   740-041741   1GA24081097       JPSU-650W-AC-AFO
Fan Tray 0                                               ACX5K Fan Tray 0, Front
 to Back Airflow - AFO
```

```
Fan Tray 1                                                ACX5K Fan Tray 1, Front
 to Back Airflow - AFO
Fan Tray 2                                                ACX5K Fan Tray 2, Front
 to Back Airflow - AFO
Fan Tray 3                                                ACX5K Fan Tray 3, Front
 to Back Airflow - AFO
Fan Tray 4                                                ACX5K Fan Tray 4, Front
 to Back Airflow - AFO
```

show chassis hardware clei-models (ACX5048 Router)

```
user@host> show chassis hardware clei-models
Hardware inventory:
Item             Version  Part number  CLEI code         FRU model number
Routing Engine 0          BUILTIN      CMMRG00BRA        ACX5048
FPC 0            REV 05   650-056267   CMMRG00BRA        ACX5048
  PIC 0                   BUILTIN      CMMRG00BRA        ACX5048
Power Supply 1   REV 03   740-041741   CMUPABHBAA        JPSU-650W-AC-AFO
Fan Tray 0                                               ACX5K-FAN
Fan Tray 1                                               ACX5K-FAN
Fan Tray 2                                               ACX5K-FAN
Fan Tray 3                                               ACX5K-FAN
Fan Tray 4                                               ACX5K-FAN
```

show chassis hardware models (ACX5048 Router)

```
user@host> show chassis hardware models
Hardware inventory:
Item             Version  Part number  Serial number     FRU model number
Routing Engine 0          BUILTIN      BUILTIN           ACX5048
FPC 0            REV 05   650-056267   VF3714170810      ACX5048
  PIC 0                   BUILTIN      BUILTIN           ACX5048
Power Supply 1   REV 03   740-041741   1GA24081097       JPSU-650W-AC-AFO
Fan Tray 0                                               ACX5K-FAN
Fan Tray 1                                               ACX5K-FAN
Fan Tray 2                                               ACX5K-FAN
Fan Tray 3                                               ACX5K-FAN
Fan Tray 4                                               ACX5K-FAN
```

show chassis hardware (ACX5096 Router)

```
user@host> show chassis hardware
Hardware inventory:
Item             Version  Part number  Serial number     Description
Chassis                               VB3714510139      ACX5096
Pseudo CB 0
Routing Engine 0          BUILTIN      BUILTIN           ACX5K Routing Engine
FPC 0            REV 09   650-053391   VB3714510139      ACX5096
  CPU                     BUILTIN      BUILTIN           FPC CPU
  PIC 0                   BUILTIN      BUILTIN           96x10G-8x40G
    Xcvr 0       REV 01   740-021308   ARS186H           SFP+-10G-SR
    Xcvr 2       REV 01   740-031851   AM1045SUA1G       SFP-SX
    Xcvr 10      REV 02   740-011613   NS11KRP           SFP-SX
    Xcvr 14      REV 01   740-031980   AMC0LKL           SFP+-10G-SR
    Xcvr 20      REV 01   740-021308   ARS18A2           SFP+-10G-SR
    Xcvr 30      REV 02   740-011613   PJ21954           SFP-SX
    Xcvr 35      REV 01   740-031851   PN344LV           SFP-SX
    Xcvr 40      REV 01   740-031851   PLG028R           SFP-SX
    Xcvr 41      REV 01   740-021308   L12D01919         SFP+-10G-SR
    Xcvr 46      REV 01   740-011613   PD91F10           SFP-SX
```

```
    Xcvr 64      REV 01   740-031980   AMS0YSS           SFP+-10G-SR
    Xcvr 96      REV 01   740-032986   QE481421          QSFP+-40G-SR4
    Xcvr 99      REV 01   740-032986   QE494942          QSFP+-40G-SR4
    Xcvr 100     REV 01   740-032986   QE494756          QSFP+-40G-SR4
Power Supply 0   REV 01   740-053352   1GD14220106       JPSU-850W-AC-AFO
Power Supply 1   REV 01   740-053352   1GD14220102       JPSU-850W-AC-AFO
Fan Tray 0                                               ACX5K Fan Tray 0, Front
 to Back Airflow - AFO
Fan Tray 1                                               ACX5K Fan Tray 1, Front
 to Back Airflow - AFO
Fan Tray 2                                               ACX5K Fan Tray 2, Front
 to Back Airflow - AFO
```

show chassis hardware detail (ACX5096 Router)

```
user@host> show chassis hardware detail
Hardware inventory:
Item             Version  Part number  Serial number     Description
Chassis                                VB3714510139      ACX5096
Pseudo CB 0
Routing Engine 0          BUILTIN      BUILTIN           ACX5K Routing Engine
  ad0     509 MB  QEMU HARDDISK        QM00001           Hard Disk
  ad1    4095 MB  QEMU HARDDISK        QM00002           Hard Disk
  ad2     511 MB  QEMU HARDDISK        QM00003           Hard Disk
  ad3    1023 MB  QEMU HARDDISK        QM00004           Hard Disk
  usb0 (addr 1)  product 0x0000 0      vendor 0x0000     uhub1
  usb0 (addr 2)  product 0x0020 32     vendor 0x8087     uhub2
FPC 0            REV 09   650-053391   VB3714510139      ACX5096
  CPU                     BUILTIN      BUILTIN           FPC CPU
  PIC 0                   BUILTIN      BUILTIN           96x10G-8x40G
    Xcvr 0       REV 01   740-021308   ARS186H           SFP+-10G-SR
    Xcvr 10      REV 02   740-011613   NS11KRP           SFP-SX
    Xcvr 14      REV 01   740-031980   AMC0LKL           SFP+-10G-SR
    Xcvr 20      REV 01   740-021308   ARS18A2           SFP+-10G-SR
    Xcvr 30      REV 02   740-011613   PJ21954           SFP-SX
    Xcvr 41      REV 01   740-021308   L12D01919         SFP+-10G-SR
    Xcvr 46      REV 01   740-011613   PD91F10           SFP-SX
    Xcvr 64      REV 01   740-031980   AMS0YSS           SFP+-10G-SR
    Xcvr 78      REV 01   740-031851   AM1045SUA1G       SFP-SX
    Xcvr 96      REV 01   740-032986   QE481421          QSFP+-40G-SR4
    Xcvr 99      REV 01   740-032986   QE494942          QSFP+-40G-SR4
    Xcvr 100     REV 01   740-032986   QE494756          QSFP+-40G-SR4
Power Supply 0   REV 01   740-053352   1GD14220106       JPSU-850W-AC-AFO
Power Supply 1   REV 01   740-053352   1GD14220102       JPSU-850W-AC-AFO
Fan Tray 0                                               ACX5K Fan Tray 0, Front
 to Back Airflow - AFO
Fan Tray 1                                               ACX5K Fan Tray 1, Front
 to Back Airflow - AFO
Fan Tray 2                                               ACX5K Fan Tray 2, Front
 to Back Airflow - AFO
```

show chassis hardware clei-models (ACX5096 Router)

```
user@host> show chassis hardware clei-models
Hardware inventory:
Item             Version  Part number  CLEI code         FRU model number
Routing Engine 0          BUILTIN      CMMNX10BRA        ACX5096
FPC 0            REV 09   650-053391   CMMNX10BRA        ACX5096
  PIC 0                   BUILTIN      CMMNX10BRA        ACX5096
Power Supply 0   REV 01   740-053352   CMUPACSBAA        JPSU-850W-AC-AFO
```

```
Power Supply 1   REV 01   740-053352   CMUPACSBAA        JPSU-850W-AC-AFO
Fan Tray 0                                               ACX5K-FAN
Fan Tray 1                                               ACX5K-FAN
Fan Tray 2                                               ACX5K-FAN
```

show chassis hardware models (ACX5096 Router)

```
user@host> show chassis hardware models
Hardware inventory:
Item             Version  Part number  Serial number     FRU model number
Routing Engine 0          BUILTIN      BUILTIN           ACX5096
FPC 0            REV 09   650-053391   VB3714510139      ACX5096
  PIC 0                   BUILTIN      BUILTIN           ACX5096
Power Supply 0   REV 01   740-053352   1GD14220106       JPSU-850W-AC-AFO
Power Supply 1   REV 01   740-053352   1GD14220102       JPSU-850W-AC-AFO
Fan Tray 0                                               ACX5K-FAN
Fan Tray 1                                               ACX5K-FAN
Fan Tray 2                                               ACX5K-FAN
```

show chassis hardware (ACX500 Router)

```
user@host> show chassis hardware
Hardware inventory:
Item             Version  Part number  Serial number     Description
Chassis                               VJ0214510035      ACX500-AC
Midplane         REV 01   650-055932   VJ0214510035      ACX500-AC
Routing Engine            BUILTIN      BUILTIN           Routing Engine
FEB 0                     BUILTIN      BUILTIN           Forwarding Engine
Processor
FPC 0                     BUILTIN      BUILTIN           FPC BUILTIN
  MIC 0                   BUILTIN      BUILTIN           2x 1GE(LAN) SFP
    PIC 0                 BUILTIN      BUILTIN           2x 1GE(LAN) SFP
      Xcvr 0     REV 01   740-031851   PMF2Y3C           SFP-SX
      Xcvr 1     REV 01   740-031851   PN342QN           SFP-SX
  MIC 1                   BUILTIN      BUILTIN           4x 1GE(LAN) SFP, RJ45
    PIC 1                 BUILTIN      BUILTIN           4x 1GE(LAN) SFP, RJ45
      Xcvr 0     REV 01   740-011613   PF30K0L           SFP-SX
  MIC 2                   BUILTIN      BUILTIN           MS BUILTIN
    PIC 2                 BUILTIN      BUILTIN           MS BUILTIN
```

show chassis hardware detail (ACX500 Router)

```
user@host> show chassis hardware detail
Hardware inventory:
Item             Version  Part number  Serial number     Description
Chassis                               VJ0214510035      ACX500-AC
Midplane         REV 01   650-055932   VJ0214510035      ACX500-AC
Routing Engine            BUILTIN      BUILTIN           Routing Engine
  da0    3820 MB  USB DISK 2.0                           Nand Flash 0
FEB 0                     BUILTIN      BUILTIN           Forwarding Engine
Processor
FPC 0                     BUILTIN      BUILTIN           FPC BUILTIN
  MIC 0                   BUILTIN      BUILTIN           2x 1GE(LAN) SFP
    PIC 0                 BUILTIN      BUILTIN           2x 1GE(LAN) SFP
      Xcvr 0     REV 01   740-031851   PMF2Y3C           SFP-SX
      Xcvr 1     REV 01   740-031851   PN342QN           SFP-SX
  MIC 1                   BUILTIN      BUILTIN           4x 1GE(LAN) SFP, RJ45
    PIC 1                 BUILTIN      BUILTIN           4x 1GE(LAN) SFP, RJ45
      Xcvr 0     REV 01   740-011613   PF30K0L           SFP-SX
```

```
  MIC 2                   BUILTIN      BUILTIN           MS BUILTIN
    PIC 2                 BUILTIN      BUILTIN           MS BUILTIN
```

show chassis hardware extensive (ACX500 Router)

```
user@host> show chassis hardware extensive
Hardware inventory:
Item             Version  Part number  Serial number     Description
Chassis                                VJ0214510035      ACX500-AC
 Jedec Code:   0x7fb0            EEPROM Version:    0x02
                                 S/N:               VJ0214510035
 Assembly ID:  0x057c            Assembly Version:  00.00
 Date:         00-00-0000        Assembly Flags:    0x00
 ID: ACX500-AC
 Board Information Record:
  Address 0x00: 00 00 00 00 00 00 00 00 00 00 00 00 00 00 00 00
 I2C Hex Data:
  Address 0x00: 7f b0 02 ff 05 7c 00 00 00 00 00 00 00 00 00 00
  Address 0x10: 00 00 00 00 00 00 00 00 00 00 00 00 00 00 00 00
  Address 0x20: 56 4a 30 32 31 34 35 31 30 30 33 35 00 00 00 00
  Address 0x30: 00 00 00 00 00 00 00 00 00 00 00 00 00 00 00 00
  Address 0x40: 00 00 00 00 00 00 00 00 00 00 00 00 00 00 00 00
  Address 0x50: 00 00 00 00 00 00 00 00 00 00 00 00 00 00 00 00
  Address 0x60: 00 00 00 00 00 00 00 00 00 00 00 00 00 00 00 00
  Address 0x70: 00 00 00 00 00 00 00 00 00 00 00 00 00 00 00 00
Midplane         REV 01   650-055932   VJ0214510035      ACX500-AC
 Jedec Code:   0x7fb0            EEPROM Version:    0x02
 P/N:          650-055932        S/N:               VJ0214510035
 Assembly ID:  0x057c            Assembly Version:  01.00
 Date:         12-23-2014        Assembly Flags:    0x00
 Version:      REV 01            CLEI Code:         PROTOXCLEI
 ID: ACX500-AC                   FRU Model Number:  ACX500-AC
 Board Information Record:
  Address 0x00: ad 01 00 80 f0 1c 2d 1b 60 80 ff ff ff ff ff ff
 I2C Hex Data:
  Address 0x00: 7f b0 02 fe 05 7c 01 00 52 45 56 20 30 31 00 00
  Address 0x10: 00 00 00 00 36 35 30 2d 30 35 35 39 33 32 00 00
  Address 0x20: 56 4a 30 32 31 34 35 31 30 30 33 35 00 17 0c 07
  Address 0x30: de ff ff ff ad 01 00 80 f0 1c 2d 1b 60 80 ff ff
  Address 0x40: ff ff ff ff 01 50 52 4f 54 4f 58 43 4c 45 49 41
  Address 0x50: 43 58 35 30 30 2d 41 43 00 00 00 00 00 00 00 00
  Address 0x60: 00 00 00 00 00 00 30 41 00 ff ff ff ff ff ff ff
  Address 0x70: ff ff ff 93 56 4a 30 32 31 34 35 31 30 30 33 35
Routing Engine           BUILTIN      BUILTIN           Routing Engine
  da0    3820 MB  USB DISK 2.0                          Nand Flash 0
FEB 0                    BUILTIN      BUILTIN           Forwarding Engine
Processor
FPC 0                    BUILTIN      BUILTIN           FPC BUILTIN
  MIC 0                  BUILTIN      BUILTIN           2x 1GE(LAN) SFP
 Jedec Code:   0x0000            EEPROM Version:    0x00
 P/N:          BUILTIN           S/N:               BUILTIN
 Assembly ID:  0x0a40            Assembly Version:  00.00
 Date:         00-00-0000        Assembly Flags:    0x00
 ID: 2x 1GE(LAN) SFP
 Board Information Record:
  Address 0x00: 00 00 00 00 00 00 00 00 00 00 00 00 00 00 00 00
 I2C Hex Data:
  Address 0x00: 00 00 00 00 0a 40 00 00 00 00 00 00 00 00 00 00
  Address 0x10: 00 00 00 00 42 55 49 4c 54 49 4e 00 49 6e 76 61
  Address 0x20: 42 55 49 4c 54 49 4e 00 49 6e 76 61 00 00 00 00
  Address 0x30: 00 00 00 00 00 00 00 00 00 00 00 00 00 00 00 00
```

```
 Address 0x40: 00 00 00 00 00 00 00 00 00 00 00 00 00 00 00 00
 Address 0x50: 00 00 00 00 00 00 00 00 00 00 00 00 00 00 00 00
 Address 0x60: 00 00 00 00 00 00 00 00 00 00 00 00 00 00 00 00
 Address 0x70: 00 00 00 00 de ad be ef 64 20 22 a8 60 af 21 38
   PIC 0                 BUILTIN      BUILTIN           2x 1GE(LAN) SFP
     Xcvr 0     REV 01   740-031851   PMF2Y3C           SFP-SX
     Xcvr 1     REV 01   740-031851   PN342QN           SFP-SX
 MIC 1                   BUILTIN      BUILTIN           4x 1GE(LAN) SFP, RJ45
Jedec Code:   0x0000            EEPROM Version:    0x00
P/N:          BUILTIN           S/N:               BUILTIN
Assembly ID:  0x0aac            Assembly Version:  00.00
Date:         00-00-0000        Assembly Flags:    0x00
ID: 4x 1GE(LAN) SFP, RJ45
Board Information Record:
 Address 0x00: 00 00 00 00 00 00 00 00 00 00 00 00 00 00 00 00
I2C Hex Data:
 Address 0x00: 00 00 00 00 0a ac 00 00 00 00 00 00 00 00 00 00
 Address 0x10: 00 00 00 00 42 55 49 4c 54 49 4e 00 49 6e 76 61
 Address 0x20: 42 55 49 4c 54 49 4e 00 49 6e 76 61 00 00 00 00
 Address 0x30: 00 00 00 00 00 00 00 00 00 00 00 00 00 00 00 00
 Address 0x40: 00 00 00 00 00 00 00 00 00 00 00 00 00 00 00 00
 Address 0x50: 00 00 00 00 00 00 00 00 00 00 00 00 00 00 00 00
 Address 0x60: 00 00 00 00 00 00 00 00 00 00 00 00 00 00 00 00
 Address 0x70: 00 00 00 00 00 00 00 00 64 20 b5 c0 60 af 21 38
   PIC 1                 BUILTIN      BUILTIN           4x 1GE(LAN) SFP, RJ45
     Xcvr 0     REV 01   740-011613   PF30K0L           SFP-SX
 MIC 2                   BUILTIN      BUILTIN           MS BUILTIN
Jedec Code:   0x0000            EEPROM Version:    0x00
P/N:          BUILTIN           S/N:               BUILTIN
Assembly ID:  0x0aaf            Assembly Version:  00.00
Date:         00-00-0000        Assembly Flags:    0x00
ID: MS BUILTIN
Board Information Record:
 Address 0x00: 00 00 00 00 00 00 00 00 00 00 00 00 00 00 00 00
I2C Hex Data:
 Address 0x00: 00 00 00 00 0a af 00 00 00 00 00 00 00 00 00 00
 Address 0x10: 00 00 00 00 42 55 49 4c 54 49 4e 00 49 6e 76 61
 Address 0x20: 42 55 49 4c 54 49 4e 00 49 6e 76 61 00 00 00 00
 Address 0x30: 00 00 00 00 00 00 00 00 00 00 00 00 00 00 00 00
 Address 0x40: 00 00 00 00 00 00 00 00 00 00 00 00 00 00 00 00
 Address 0x50: 00 00 00 00 00 00 00 00 00 00 00 00 00 00 00 00
 Address 0x60: 00 00 00 00 00 00 00 00 00 00 00 00 00 00 00 00
 Address 0x70: 00 00 00 00 de ad be ef 64 22 cd 48 60 af 21 38
   PIC 2                 BUILTIN      BUILTIN           MS BUILTIN
```

show chassis hardware clei-models (ACX500 Router)

```
user@host> show chassis hardware clei-models
Hardware inventory:
Item             Version  Part number  CLEI code         FRU model number
Midplane         REV 01   650-055932   PROTOXCLEI        ACX500-AC
Routing Engine            BUILTIN
FEB 0                     BUILTIN
FPC 0                     BUILTIN
```

show chassis hardware models (ACX500 Router)

```
user@host> show chassis hardware models
Hardware inventory:
Item             Version  Part number  Serial number     FRU model number
```

```
Midplane         REV 01   650-055932   VJ0214510035      ACX500-AC
Routing Engine            BUILTIN      BUILTIN
FEB 0                     BUILTIN      BUILTIN
FPC 0                     BUILTIN      BUILTIN
```

show chassis led satellite

Syntax show chassis led satellite [slot-id *slot-id* |device-alias *alias-name*]

Release Information Command introduced in Junos OS Release 14.2R3 for Junos Fusion Provider Edge. Command introduced in Junos OS Release 16.1R1 for Junos Fusion Enterprise.

Description Display the status and colors of the chassis LEDs of the satellite devices in a Junos Fusion. A major alarm (red) indicates a critical error condition that requires immediate action. A minor alarm (yellow) indicates a noncritical condition that requires monitoring or maintenance. A minor alarm that is left unchecked might cause interruption in service or performance degradation.

Options

none—Display the status of the chassis status LEDs of every satellite device in the Junos Fusion.

slot-id *slot-id*—(Optional) Display the status of the chassis status LEDs of the satellite device using the specified FPC slot identifier in the Junos Fusion. The *slot-id* is the FPC slot ID number.

device-alias *alias-name*—(Optional) Display the status of the chassis status LEDs of the satellite device using the specified alias in the Junos Fusion.

Required Privilege Level view

Related Documentation

- Configuring Satellite Device Alarm Handling Using an Environment Monitoring Satellite Policy in a Junos Fusion on page 73
- *Understanding Junos Fusion Provider Edge Components*
- *Understanding Junos Fusion Enterprise Components*

List of Sample Output show chassis led satellite on page 651

Output Fields Table 18 on page 650 lists the output fields for the **show chassis led satellite** command. Output fields are listed in the approximate order in which they appear.

Table 18: show chassis led Output Fields

Field Name	Field Description
Beacon LED	(Applies when QFX5100, QFX5110, and QFX5200 switches are in an satellite device role only) Indicates if the beacon feature is on or off. The beacon feature is always off in a Junos Fusion. The **Beacon LED** output maps to the **ID–Identification** LED state. For more information, see: • *Chassis Status LEDs on a QFX5100 Device* • *QFX5110 Chassis Status LEDs* • *QFX5200 Chassis Status LEDs*
System LED	Indicates the state of the System (**SYS**) LED on the satellite device. For more information, see: • *Chassis Status LEDs on EX4300 Switches* • *Chassis Status LEDs on a QFX5100 Device* • *QFX5110 Chassis Status LEDs* • *QFX5200 Chassis Status LEDs*
Master LED	Indicates the state of the Master (**MST**) LED on the satellite device. For more information, see: • *Chassis Status LEDs on EX4300 Switches* • *Chassis Status LEDs on a QFX5100 Device* • *QFX5110 Chassis Status LEDs* • *QFX5200 Chassis Status LEDs*
Alarm LED	Indicates the state of the Alarm (**ALM**) LED on the satellite device. For more information, see: • *Chassis Status LEDs on EX4300 Switches* • *Chassis Status LEDs on a QFX5100 Device* • *QFX5110 Chassis Status LEDs* • *QFX5200 Chassis Status LEDs*
Mgmt Port0 LED	(Applies when QFX5100, QFX5110, and QFX5200 switches are in an satellite device role only) Indicates the state of the management port 0 (**em0**) LED status on the satellite device. This port is always off in a Junos Fusion. For more information, see: • *Management Port LEDs on a QFX5100 Device* • *QFX5110 Management Port LEDs* • *QFX5200 Management Port LEDs*

Table 18: show chassis led Output Fields (continued)

Field Name	Field Description
Mgmt Port1 LED	(Applies when QFX5100, QFX5110, and QFX5200 switches are in an satellite device role only) Indicates the state of the management port 1(**em0**) LED status on the satellite device. This port is always off in a Junos Fusion. For more information, see: • *Management Port LEDs on a QFX5100 Device* • *QFX5110 Management Port LEDs* • *QFX5200 Management Port LEDs*
Interface	The interface name on the satellite device. For more information, see: • *Management Port LEDs on a QFX5100 Device* • *QFX5110 Management Port LEDs* • *QFX5200 Management Port LEDs*
Status LED	The state of the Status LED for the particular interface on the satellite device. For more information, see: • *Network Port, Built-In QSFP+ Port, Uplink Port, and Uplink Module Port LEDs on EX4300 Switches* • *Access Port and Uplink Port LEDs on a QFX5100 Device* • *QFX5110 Access Port and Uplink Port LEDs* • *QFX5200 Access Port and Uplink Port LEDs*
Link/Activity LED	The state of the Link/Activity LED for the particular interface on the satellite device. For more information, see: • *Network Port, Built-In QSFP+ Port, Uplink Port, and Uplink Module Port LEDs on EX4300 Switches* • *Access Port and Uplink Port LEDs on a QFX5100 Device* • *QFX5110 Access Port and Uplink Port LEDs* • *QFX5200 Access Port and Uplink Port LEDs*

Sample Output

show chassis led satellite

```
user@aggregation-device> show chassis led satellite
                LED status for: FPC 101
                ----------------------------------
LEDs status:
    Beacon LED: OFF
    System LED: GREEN
    Master LED: OFF
```

```
    Alarm LED : YELLOW
    Mgmt Port0 LED: OFF
    Mgmt Port1 LED: OFF

Interface               STATUS LED      LINK/ACTIVITY LED
-------------------------------------------------------
xe-101/0/0              green
xe-101/0/1              green
xe-101/0/10             off
xe-101/0/48:0           green
xe-101/0/48:1           green
xe-101/0/48:2           green
xe-101/0/48:3           green

                LED status for: FPC 102
                -----------------------------------
LEDs status:
    Beacon LED: OFF
    System LED: GREEN
    Master LED: OFF
    Alarm LED : YELLOW
    Mgmt Port0 LED: OFF
    Mgmt Port1 LED: OFF

Interface               STATUS LED      LINK/ACTIVITY LED
-------------------------------------------------------
xe-102/0/0              green
xe-102/0/1              green
xe-102/0/10             off
xe-102/0/48:0           green
xe-102/0/48:1           green
xe-102/0/48:2           green
xe-102/0/48:3           green
```

show chassis routing-engine

List of Syntax

Syntax

show chassis routing-engine
<bios | *slot*>

Syntax (ACX Series Universal Metro Routers)

show chassis routing-engine

Syntax (EX Series Switches)

show chassis routing-engine
<*slot*>
<satellite [slot-id *slot-id* |device-alias *alias-name*>

Syntax (QFX Series)

show chassis routing-engine
<interconnect-device *name*>
<node-device *name*>
<*slot*>
<*bios*>
<*errors*>

Syntax (MX Series Routers)

show chassis routing-engine
<all-members>
<bios | *slot*>
<local>
<member *member-id*>
<satellite [slot-id *slot-id* |device-alias *alias-name*>

Syntax (MX2010 Universal Routing Platforms)

show chassis routing-engine
<bios | *slot*>

Syntax (MX2020 Universal Routing Platforms)

show chassis routing-engine
<bios | *slot*>

Syntax (MX104 Universal Routing Platforms)

show chassis routing-engine

Syntax (MX204 and MX10003 Universal Routing Platforms)

show chassis routing-engine
<*slot*>
<bios>
<errors>

Syntax (PTX Series Packet Transport Routers)

show chassis routing-engine

Syntax (T Series Routers)

show chassis routing-engine
<bios | *slot*>

Syntax (TX Matrix Routers)

show chassis routing-engine
<bios | *slot*>
<lcc *number* | scc>

Syntax (TX Matrix Plus Routers)

show chassis routing-engine
<bios | *slot*>
<lcc *number* | sfc *number*>

Release Information

Command introduced before Junos OS Release 7.4.
Command introduced in Junos OS Release 9.0 for EX Series switches.
sfc option introduced in Junos OS Release in 9.6 for the TX Matrix Plus router.
Command introduced in Junos OS Release 11.1 for QFX Series.
5 sec CPU Utilization, **1 min CPU Utilization**, **5 min CPU Utilization**, and **15 min CPU Utilization** output fields introduced in Junos OS Release 11.3R1.
Command introduced in Junos OS Release 12.2 for ACX Series Universal Metro Routers.
Command introduced in Junos OS Release 12.3 for MX2010 and MX2020 Universal Routing Platforms.
Command introduced in Junos OS Release 13.2 for MX104 Universal Routing Platforms.
Command introduced in Junos OS Release 14.1X53-D20 for the OCX Series.
satellite option introduced in Junos OS Release 14.2R3.
Command introduced in Junos OS Release 17.2 for PTX10008 Routers.
Command introduced in Junos OS Release 17.3 for MX10003 Universal Routing Platforms.
Command introduced in Junos OS Release 17.4 for MX204 Universal Routing Platforms.
Command introduced in Junos OS Release 18.1R1 for EX9251 switches.

Description

Display the status of the Routing Engine.

Options

none—Display information about one or more Routing Engines. On a TX Matrix router, display information about all Routing Engines on the TX Matrix router and its attached T640 routers. On a TX Matrix Plus router, display information about all Routing Engines on the TX Matrix Plus router and its attached routers.

all-members—(MX Series routers only) (Optional) Display Routing Engine information for all members of the Virtual Chassis configuration.

bios—(Optional) Display the (BIOS) firmware version.

errors—(Optional) Display routing engine errors.

interconnect-device ***number***—(QFabric systems only) (Optional) Display Routing Engine information for a specified Interconnect device.

lcc ***number***—(TX Matrix and TX Matrix Plus routers only) (Optional) On a TX Matrix router, display Routing Engine information for a specified T640 router (line-card chassis) that is connected to the TX Matrix router. On a TX Matrix Plus router, display Routing Engine information for a specified router (line-card chassis) that is connected to the TX Matrix Plus router.

Replace *number* with the following values depending on the LCC configuration:

- 0 through 3, when T640 routers are connected to a TX Matrix router in a routing matrix.
- 0 through 3, when T1600 routers are connected to a TX Matrix Plus router in a routing matrix.
- 0 through 7, when T1600 routers are connected to a TX Matrix Plus router with 3D SIBs in a routing matrix.
- 0, 2, 4, or 6, when T4000 routers are connected to a TX Matrix Plus router with 3D SIBs in a routing matrix.

local—(MX Series routers only) (Optional) Display Routing Engine information for the local Virtual Chassis member.

member ***member-id***—(MX Series routers only) (Optional) Display Routing Engine information for the specified member of the Virtual Chassis configuration. For an MX Series Virtual Chassis, replace *member-id* with a value of 0 or 1.

node-device ***number***—(QFabric systems only) (Optional) Display Routing Engine information for a specified Node device.

satellite [slot-id ***slot-id*** **|device-alias** ***alias-name*****]**—(Junos Fusion only) (Optional) Display Routing Engine information for the specified satellite device in a Junos Fusion, or for all satellite devices in the Junos Fusion if no satellite devices are specified.

scc—(TX Matrix routers only) (Optional) Display Routing Engine information for the TX Matrix router (switch-card chassis).

sfc ***number***—(TX Matrix Plus routers only) (Optional) Display Routing Engine information for the TX Matrix Plus router (or switch-fabric chassis). Replace ***number*** with 0.

slot—(Systems with multiple Routing Engines) (Optional) Display information for an individual Routing Engine. Replace ***slot*** with 0 or 1. For QFX3500 switches, there is only one Routing Engine, so you do not need to specify the slot number.

Required Privilege Level view

Related Documentation

- *request chassis routing-engine master*
- *Configuring Routing Engine Redundancy*
- *Switching the Global Master and Backup Roles in a Virtual Chassis Configuration*

List of Sample Output

Output Fields Table 19 on page 657 lists the output fields for the **show chassis routing-engine** command. Output fields are listed in the approximate order in which they appear.

Table 19: show chassis routing-engine Output Fields

Field Name	Field Description
Slot	(Systems with single and multiple Routing Engines) Slot number.
Current state	(Systems with multiple Routing Engines) Current state of the Routing Engine: **Master**, **Backup**, or **Disabled**.
Election priority	(Systems with multiple Routing Engines) Election priority for the Routing Engine: **Master** or **Backup**.
Temperature	Temperature of the air flowing past the Routing Engine.
CPU Temperature	Temperature of the CPU.
DRAM	Total DRAM available to the Routing Engine's processor. Starting with Junos OS Release 12.3R1, the DRAM field displays both available memory and installed memory.
Memory utilization	Percentage of Routing Engine memory being used. NOTE: For platforms running Junos OS with upgraded FreeBSD, the way memory utilization is calculated has changed. Starting in Junos OS Release 15.1R1, inactive memory is no longer included in the calculation for memory utilization. Inactive memory is now considered as free. That is, the value for used memory decreases and results in more memory to be available for other processes. For platforms that run Junos OS with upgraded FreeBSD, see *Release Information for Junos OS with Upgraded FreeBSD*.
CPU utilization	Information about the Routing Engine's CPU utilization: • **User**—Percentage of CPU time being used by user processes. • **Background**—Percentage of CPU time being used by background processes. • **Kernel**—Percentage of CPU time being used by kernel processes. • **Interrupt**—Percentage of CPU time being used by interrupts. • **Idle**—Percentage of CPU time that is idle.
5 sec CPU Utilization	Information about the Routing Engine's CPU utilization in the past 5 seconds: • **User**—Percentage of CPU time being used by user processes. • **Background**—Percentage of CPU time being used by background processes. • **Kernel**—Percentage of CPU time being used by kernel processes. • **Interrupt**—Percentage of CPU time being used by interrupts. • **Idle**—Percentage of CPU time that is idle.
1 min CPU Utilization	Information about the Routing Engine's CPU utilization in the past 1 minute: • **User**—Percentage of CPU time being used by user processes. • **Background**—Percentage of CPU time being used by background processes. • **Kernel**—Percentage of CPU time being used by kernel processes. • **Interrupt**—Percentage of CPU time being used by interrupts. • **Idle**—Percentage of CPU time that is idle.

Table 19: show chassis routing-engine Output Fields (continued)

Field Name	Field Description
5 min CPU Utilization	Information about the Routing Engine's CPU utilization in the past 5 minutes: • **User**—Percentage of CPU time being used by user processes. • **Background**—Percentage of CPU time being used by background processes. • **Kernel**—Percentage of CPU time being used by kernel processes. • **Interrupt**—Percentage of CPU time being used by interrupts. • **Idle**—Percentage of CPU time that is idle.
15 min CPU Utilization	Information about the Routing Engine's CPU utilization in the past 15 minutes: • **User**—Percentage of CPU time being used by user processes. • **Background**—Percentage of CPU time being used by background processes. • **Kernel**—Percentage of CPU time being used by kernel processes. • **Interrupt**—Percentage of CPU time being used by interrupts. • **Idle**—Percentage of CPU time that is idle.
Model	Routing Engine model number.
Serial ID	(Systems with multiple Routing Engines) Identification number of the Routing Engine in this slot.
Start time	Time at which the Routing Engine started running.
Uptime	How long the Routing Engine has been running.
Routing Engine BIOS Version	BIOS version being run by the Routing Engine.

Table 19: show chassis routing-engine Output Fields (continued)

Field Name	Field Description
Last reboot reason	Reason for last reboot, including: • **power cycle/failure**—Halt of the Routing Engine using the **halt** command, powering down using the power button on the chassis or any other method (such as removal of the control board or Routing Engine), and then powering back the Routing Engine. A halt of the operating system also occurs if you enter the **request system halt** command. You can enter this command to halt the system operations on the chassis or specific Routing Engines. To restart the software, press any key on the keyboard. • **watchdog**—Reboot due to a hardware watchdog. A watchdog is a hardware monitoring process that examines the health and performance of the router to enable the device to recover from failures. A watchdog checks for problems at certain intervals, and reboots the routing engine if a problem is encountered. • **reset-button reset**—(Not available on the EX Series switch) Reboot due to pressing of the reset button on the Routing Engine. • **power-button hard power off**—Reboot due to pressing of the power button on the chassis. A powering down of the software also occurs if you enter the **request system power-off** command. You can enter this command to power down the chassis or specific Routing Engines; you can then restart the software. • **misc hardware reason**—Reboot due to miscellaneous hardware reasons. • **thermal shutdown**—Reboot due to the router or switch reaching a critical temperature at which point it is unsafe to continue operations. • **hard disk failure**—Reboot due to a hard disk or solid-state drive (SSD) failure. • **reset from debugger**—Reboot due to reset from the debugger. • **chassis control reset**—Restart the chassis process that manages PICs, FPCs, and other hardware components. The chassis control module that runs the Routing Engine performs management and monitoring functions, and it provides a single access point for operational and maintenance functions. A reset of the chassis management process occurs when you enter the **restart chassis-control** command. • **bios auto recovery reset**—Reboot due to a BIOS auto-recovery reset. • **could not be determined**—Reboot due to an undetermined reason. • **Router rebooted after a normal shutdown**—Reboot due to a normal shutdown. This reason is displayed if the Routing Engine is powered down by pushing and holding the online/offline button on the Routing Engine faceplate for 30 seconds, and then powered back. A reboot of the software also occurs if you enter the **request system reboot** command. You can enter this command to reboot the chassis or specific Routing Engines. • **Hypervisor reboot**—When both Linux host and Junos OS is rebooted using the **request vmhost reboot** command. • **VJUNOS Reboot**—When Junos OS is rebooted using the **request system reboot** command.
Load averages	Routing Engine load averages for the last 1, 5, and 15 minutes.

Sample Output

show chassis routing-engine (M5 Router)

```
user@host> show chassis routing-engine
Routing Engine status:
    Temperature                 25 degrees C / 77 degrees F
    DRAM                       768 MB
    Memory utilization          21 percent
    CPU utilization:
```

```
      User                        0 percent
      Background                  0 percent
      Kernel                      0 percent
      Interrupt                   0 percent
      Idle                      100 percent
    Model                           RE-2.0
    Serial ID                       31000007349bf701
    Start time                      2003-12-04 09:42:17 PST
    Uptime                          26 days, 1 hour, 12 minutes, 27 seconds
    Last reboot reason              Router rebooted after a normal shutdown
    Load averages:                  1 minute   5 minute  15 minute
                                        0.00       0.01       0.00
```

show chassis routing-engine (M10 Router)

```
user@host> show chassis routing-engine
Routing Engine status:
    Temperature                  25 degrees C / 77 degrees F
    DRAM                        768 MB
    Memory utilization           21 percent
    CPU utilization:
      User                        0 percent
      Background                  0 percent
      Kernel                      0 percent
      Interrupt                   0 percent
      Idle                      100 percent
    Model                           RE-2.0
    Serial ID                       31000007349bf701
    Start time                      2003-12-04 09:42:17 PST
    Uptime                          26 days, 1 hour, 12 minutes, 27 seconds
    Last reboot reason              Router rebooted after a normal shutdown
    Load averages:                  1 minute   5 minute  15 minute
                                        0.00       0.01       0.00
```

show chassis routing-engine (M20 Router)

```
user@host> show chassis routing-engine
Routing Engine status:
  Slot 0:
    Current state                   Master
    Election priority               Master (default)
    Temperature                  29 degrees C / 84 degrees F
    DRAM                        768 MB
    Memory utilization           20 percent
    CPU utilization:
      User                        1 percent
      Background                  0 percent
      Kernel                      2 percent
      Interrupt                   0 percent
      Idle                       97 percent
    Model                           RE-2.0
    Serial ID                       58000007348d9a01
    Start time                      2003-12-30 07:05:47 PST
    Uptime                        3 hours, 41 minutes, 14 seconds
    Last reboot reason              Router rebooted after a normal shutdown
    Load averages:                  1 minute   5 minute  15 minute
                                        0.00       0.02       0.00
Routing Engine status:
  Slot 1:
    Current state                   Backup
```

```
    Election priority              Backup (default)
    Temperature                 29 degrees C / 84 degrees F
    DRAM                       768 MB
    Memory utilization           0 percent
    CPU utilization:
      User                       0 percent
      Background                 0 percent
      Kernel                     1 percent
      Interrupt                  0 percent
      Idle                      99 percent
    Model                           RE-2.0
    Serial ID                       d800000734745701
    Start time                      2003-06-17 16:37:33 PDT
    Uptime                        195 days, 18 hours, 47 minutes, 9 seconds
    Last reboot reason              Router rebooted after a normal shutdown
```

show chassis routing-engine (M40 Router)

```
user@host> show chassis routing-engine
Routing Engine status:
    Temperature                 25 degrees C / 77 degrees F
    DRAM                       768 MB
    Memory utilization          21 percent
    CPU utilization:
      User                       0 percent
      Background                 0 percent
      Kernel                     0 percent
      Interrupt                  0 percent
      Idle                     100 percent
    Model                           RE-2.0
    Serial ID                       31000007349bf701
    Start time                      2003-12-04 09:42:17 PST
    Uptime                          26 days, 1 hour, 12 minutes, 27 seconds
    Last reboot reason              Router rebooted after a normal shutdown
    Load averages:                  1 minute   5 minute  15 minute
                                        0.00       0.01       0.00
```

show chassis routing-engine (M120 Router)

```
user@host> show chassis routing-engine
Routing Engine status:
  Slot 0:
    Current state                   Master
    Election priority               Master (default)
    Temperature                 46 degrees C / 114 degrees F
    CPU temperature             44 degrees C / 111 degrees F
    DRAM                      2048 MB
    Memory utilization          18 percent
    CPU utilization:
      User                       0 percent
      Background                 0 percent
      Kernel                     5 percent
      Interrupt                  0 percent
      Idle                      95 percent
    Model                           RE-A-1000
    Serial ID                       1000621154
    Start time                      2006-10-31 17:10:05 PST
    Uptime                          14 minutes, 31 seconds
    Last reboot reason              Router rebooted after a normal shutdown
    Load averages:                  1 minute   5 minute  15 minute
```

```
                                        0.02       0.07       0.07
Routing Engine status:
  Slot 1:
    Current state                  Backup
    Election priority              Backup (default)
    Temperature                 45 degrees C / 113 degrees F
    CPU temperature             42 degrees C / 107 degrees F
    DRAM                      2048 MB
    Memory utilization          15 percent
    CPU utilization:
      User                       0 percent
      Background                 0 percent
      Kernel                     0 percent
      Interrupt                  0 percent
      Idle                     100 percent
    Model                          RE-A-1000
    Serial ID                      1000621151
    Start time                     2006-10-31 17:10:04 PST
    Uptime                         14 minutes, 30 seconds
    Last reboot reason             Router rebooted after a normal shutdown
```

show chassis routing-engine (M160 Router)

```
user@host> show chassis routing-engine
Routing Engine status:
  Slot 0:
    Current state                  Master
    Election priority              Master (default)
    Temperature                 43 degrees C / 109 degrees F
    DRAM                      2048 MB
    Memory utilization          11 percent
    CPU utilization:
      User                       1 percent
      Background                 0 percent
      Kernel                     2 percent
      Interrupt                  0 percent
      Idle                      97 percent
    Model                          RE-3.0
    Serial ID                      210865700403
    Start time                     2003-12-23 12:25:55 PST
    Uptime                       6 days, 22 hours, 33 minutes, 24 seconds
    Last reboot reason             Router rebooted after a normal shutdown
    Load averages:                 1 minute   5 minute  15 minute
                                       0.24       0.13       0.04
Routing Engine status:
  Slot 1:
    Current state                  Backup
    Election priority              Backup (default)
    Temperature                 40 degrees C / 104 degrees F
    DRAM                      2048 MB
    Memory utilization           9 percent
    CPU utilization:
      User                       0 percent
      Background                 0 percent
      Kernel                     0 percent
      Interrupt                  0 percent
      Idle                     100 percent
    Model                          RE-3.0
    Serial ID                      210865700332
    Start time                     2003-12-23 12:25:55 PST
```

```
    Uptime                        6 days, 22 hours, 33 minutes, 21 seconds
    Last reboot reason             Router rebooted after a normal shutdown
```

show chassis routing-engine (MX104 Router)

```
user@host> show chassis routing-engine
Routing Engine status:
  Slot 0:
    Current state                  Master
    Election priority              Master (default)
    Temperature                 32 degrees C / 89 degrees F
    CPU temperature             42 degrees C / 107 degrees F
    DRAM                      3840 MB (3840 MB installed)
    Memory utilization          18 percent
    CPU utilization:
      User                       0 percent
      Background                 0 percent
      Kernel                     3 percent
      Interrupt                  2 percent
      Idle                      94 percent
    Model                          RE-MX-104
    Serial ID                      CAAR5925
    Start time                     2013-06-05 13:17:08 IST
    Uptime                         1 hour, 15 minutes, 8 seconds
    Last reboot reason             0x200:normal shutdown
    Load averages:                 1 minute   5 minute  15 minute
                                       0.87       0.90       0.41
Routing Engine status:
  Slot 1:
    Current state                  Backup
    Election priority              Backup (default)
    Temperature                 32 degrees C / 89 degrees F
    CPU temperature             38 degrees C / 100 degrees F
    DRAM                      3840 MB (3840 MB installed)
    Memory utilization          13 percent
    CPU utilization:
      User                       0 percent
      Background                 0 percent
      Kernel                     1 percent
      Interrupt                  2 percent
      Idle                      97 percent
    Model                          RE-MX-104
    Serial ID                      CAAM6369
    Start time                     2013-06-05 13:07:37 IST
    Uptime                         1 hour, 24 minutes, 34 seconds
    Last reboot reason             0x200:normal shutdown
    Load averages:                 1 minute   5 minute  15 minute
                                       0.19       0.15       0.06
```

show chassis routing-engine (MX240 Router)

```
user@host> show chassis routing-engine
Routing Engine status:
  Slot 0:
    Current state                  Master
    Election priority              Master (default)
    Temperature                 36 degrees C / 96 degrees F
    CPU temperature             35 degrees C / 95 degrees F
    DRAM                      3314 MB (8192 MB installed)
    Memory utilization          37 percent
```

```
    5 sec CPU utilization:
      User                      0 percent
      Background                0 percent
      Kernel                    1 percent
      Interrupt                 0 percent
      Idle                     99 percent
    1 min CPU utilization:
      User                      0 percent
      Background                0 percent
      Kernel                    1 percent
      Interrupt                 0 percent
      Idle                     99 percent
    5 min CPU utilization:
      User                      0 percent
      Background                0 percent
      Kernel                    1 percent
      Interrupt                 0 percent
      Idle                     99 percent
    15 min CPU utilization:
      User                      0 percent
      Background                0 percent
      Kernel                    1 percent
      Interrupt                 0 percent
      Idle                     99 percent
    Model                         RE-S-1800x4
    Serial ID                     9009074155
    Start time                    2014-10-13 00:35:41 PDT
    Uptime                        98 days, 2 hours, 6 minutes, 35 seconds
    Last reboot reason            Router rebooted after a normal shutdown.
    Load averages:                1 minute   5 minute  15 minute
                                      0.12       0.12       0.13
Routing Engine status:
  Slot 1:
    Current state                 Present
```

show chassis routing-engine (MX480 Router)

```
user@host> show chassis routing-engine
Routing Engine status:
  Slot 0:
    Current state                 Backup
    Election priority             Master (default)
    Temperature                  30 degrees C / 86 degrees F
    CPU temperature              32 degrees C / 89 degrees F
    DRAM                       3314 MB (8192 MB installed)
    Memory utilization           51 percent
    5 sec CPU utilization:
      User                        0 percent
      Background                  0 percent
      Kernel                      0 percent
      Interrupt                   0 percent
      Idle                      100 percent
    1 min CPU utilization:
      User                        0 percent
      Background                  0 percent
      Kernel                      0 percent
      Interrupt                   0 percent
      Idle                        0 percent
    5 min CPU utilization:
      User                        0 percent
      Background                  0 percent
```

```
      Kernel                     0 percent
      Interrupt                  0 percent
      Idle                       0 percent
    15 min CPU utilization:
      User                       0 percent
      Background                 0 percent
      Kernel                     0 percent
      Interrupt                  0 percent
      Idle                       0 percent
    Model                          RE-S-1800x4
    Serial ID                      9009079817
    Start time                     2015-01-19 01:45:58 PST
    Uptime                         7 minutes, 23 seconds
    Last reboot reason             Router rebooted after a normal shutdown.
    Load averages:                 1 minute   5 minute  15 minute
                                       0.16       0.16       0.09
Routing Engine status:
  Slot 1:
    Current state                  Master
    Election priority              Backup (default)
    Temperature                   31 degrees C / 87 degrees F
    CPU temperature               32 degrees C / 89 degrees F
    DRAM                        8144 MB (8192 MB installed)
    Memory utilization            23 percent
    5 sec CPU utilization:
      User                       0 percent
      Background                 0 percent
      Kernel                     1 percent
      Interrupt                  0 percent
      Idle                      99 percent
    1 min CPU utilization:
      User                       0 percent
      Background                 0 percent
      Kernel                     1 percent
      Interrupt                  0 percent
      Idle                      98 percent
    5 min CPU utilization:
      User                       0 percent
      Background                 0 percent
      Kernel                     1 percent
      Interrupt                  0 percent
      Idle                      98 percent
    15 min CPU utilization:
      User                       0 percent
      Background                 0 percent
      Kernel                     1 percent
      Interrupt                  0 percent
      Idle                      98 percent
    Model                          RE-S-1800x4
    Serial ID                      9009079838
    Start time                     2015-01-09 10:52:20 PST
    Uptime                         9 days, 15 hours, 1 minute, 4 seconds
    Last reboot reason             Router rebooted after a normal shutdown.
    Load averages:                 1 minute   5 minute  15 minute
                                       0.10       0.16       0.16
```

show chassis routing-engine (MX960 Router)

```
user@host> show chassis routing-engine
Routing Engine status:
  Slot 0:
```

```
    Current state                  Master
    Election priority              Master (default)
    Temperature                 37 degrees C / 98 degrees F
    CPU temperature             34 degrees C / 93 degrees F
    DRAM                      3313 MB (16384 MB installed)
    Memory utilization          31 percent
    5 sec CPU utilization:
      User                       0 percent
      Background                 0 percent
      Kernel                     3 percent
      Interrupt                  1 percent
      Idle                      96 percent
    1 min CPU utilization:
      User                       0 percent
      Background                 0 percent
      Kernel                     4 percent
      Interrupt                  1 percent
      Idle                      96 percent
    5 min CPU utilization:
      User                       0 percent
      Background                 0 percent
      Kernel                     4 percent
      Interrupt                  1 percent
      Idle                      95 percent
    15 min CPU utilization:
      User                       0 percent
      Background                 0 percent
      Kernel                     4 percent
      Interrupt                  1 percent
      Idle                      95 percent
    Model                          RE-S-1800x4
    Serial ID                      9013043785
    Start time                     2015-01-12 23:37:53 PST
    Uptime                         6 days, 2 hours, 17 minutes, 3 seconds
    Last reboot reason             Router rebooted after a normal shutdown.
    Load averages:                 1 minute   5 minute  15 minute
                                       0.00       0.02       0.00
Routing Engine status:
  Slot 1:
    Current state                  Backup
    Election priority              Backup (default)
    Temperature                 37 degrees C / 98 degrees F
    CPU temperature             34 degrees C / 93 degrees F
    DRAM                      3313 MB (16384 MB installed)
    Memory utilization          26 percent
    5 sec CPU utilization:
      User                       0 percent
      Background                 0 percent
      Kernel                     0 percent
      Interrupt                  0 percent
      Idle                      99 percent
    1 min CPU utilization:
      User                       0 percent
      Background                 0 percent
      Kernel                     0 percent
      Interrupt                  0 percent
      Idle                       0 percent
    5 min CPU utilization:
      User                       0 percent
      Background                 0 percent
      Kernel                     0 percent
```

```
    Interrupt                  0 percent
    Idle                       0 percent
  15 min CPU utilization:
    User                       0 percent
    Background                 0 percent
    Kernel                     0 percent
    Interrupt                  0 percent
    Idle                       0 percent
  Model                          RE-S-1800x4
  Serial ID                      9013037303
  Start time                     2015-01-12 23:25:29 PST
  Uptime                         6 days, 2 hours, 29 minutes, 21 seconds
  Last reboot reason             Router rebooted after a normal shutdown.
  Load averages:                 1 minute   5 minute  15 minute
                                     0.00       0.00       0.00
```

show chassis routing-engine (MX2010 Router)

```
user@host> show chassis routing-engine
Routing Engine status:
  Slot 0:
    Current state                  Master
    Election priority              Master (default)
    Temperature                 41 degrees C / 105 degrees F
    CPU temperature             38 degrees C / 100 degrees F
    DRAM                      3313 MB (16384 MB installed)
    Memory utilization          37 percent
    5 sec CPU utilization:
      User                       0 percent
      Background                 0 percent
      Kernel                     2 percent
      Interrupt                  2 percent
      Idle                      96 percent
    1 min CPU utilization:
      User                       0 percent
      Background                 0 percent
      Kernel                     2 percent
      Interrupt                  2 percent
      Idle                      97 percent
    5 min CPU utilization:
      User                       0 percent
      Background                 0 percent
      Kernel                     2 percent
      Interrupt                  2 percent
      Idle                      97 percent
    15 min CPU utilization:
      User                       0 percent
      Background                 0 percent
      Kernel                     2 percent
      Interrupt                  2 percent
      Idle                      97 percent
    Model                          RE-S-1800x4
    Serial ID                      9009146890
    Start time                     2015-01-18 21:35:12 PST
    Uptime                         4 hours, 21 minutes, 34 seconds
    Last reboot reason             Router rebooted after a normal shutdown.
    Load averages:                 1 minute   5 minute  15 minute
                                       0.11       0.14       0.14
```

show chassis routing-engine (MX2020 Router)

```
user@host> show chassis routing-engine
Routing Engine status:
  Slot 0:
    Current state                  Master
    Election priority              Master (default)
    Temperature                 2 degrees C / 35 degrees F
    CPU temperature             32 degrees C / 89 degrees F
    DRAM                      32735 MB (32768 MB installed)
    Memory utilization          10 percent
    5 sec CPU utilization:
      User                       0 percent
      Background                 0 percent
      Kernel                     1 percent
      Interrupt                  1 percent
      Idle                      98 percent
    1 min CPU utilization:
      User                       0 percent
      Background                 0 percent
      Kernel                     1 percent
      Interrupt                  1 percent
      Idle                      99 percent
    5 min CPU utilization:
      User                       0 percent
      Background                 0 percent
      Kernel                     1 percent
      Interrupt                  1 percent
      Idle                      99 percent
    15 min CPU utilization:
      User                       0 percent
      Background                 0 percent
      Kernel                     1 percent
      Interrupt                  1 percent
      Idle                      99 percent
    Model                        RE-S-2X00x8
    Serial ID                    CADN0309
    Start time                   2015-01-08 16:31:15 PST
    Uptime                       4 days, 22 hours, 59 minutes, 3 seconds
    Last reboot reason           Router rebooted after a normal shutdown.
    Load averages:               1 minute   5 minute  15 minute
                                     0.39       0.41       0.34
```

show chassis routing-engine (MX10003 Router)

```
user@host> show chassis routing-engine

Routing Engine status:
  Slot 0:
    Current state                  Master
    Election priority              Master (default)
    Temperature                 43 degrees C / 109 degrees F
    CPU temperature             40 degrees C / 104 degrees F
    DRAM                      49112 MB (49152 MB installed)
    Memory utilization           4 percent
    5 sec CPU utilization:
      User                       0 percent
      Background                 0 percent
      Kernel                     2 percent
      Interrupt                  0 percent
```

```
      Idle                      98 percent
    1 min CPU utilization:
      User                       0 percent
      Background                 0 percent
      Kernel                     1 percent
      Interrupt                  0 percent
      Idle                      98 percent
    5 min CPU utilization:
      User                       0 percent
      Background                 0 percent
      Kernel                     1 percent
      Interrupt                  0 percent
      Idle                      98 percent
    15 min CPU utilization:
      User                       0 percent
      Background                 0 percent
      Kernel                     1 percent
      Interrupt                  0 percent
      Idle                      96 percent
    Model                          RE-S-2X00x6
    Start time                     2017-08-08 23:13:16 PDT
    Uptime                         53 minutes, 38 seconds
    Last reboot reason             0x1:power cycle/failure
    Load averages:                 1 minute   5 minute  15 minute
                                       0.23       0.28       0.25
Routing Engine status:
  Slot 1:
    Current state                  Backup
    Election priority              Backup (default)
    Temperature                38 degrees C / 100 degrees F
    CPU temperature            39 degrees C / 102 degrees F
    DRAM                    49112 MB (49152 MB installed)
    Memory utilization          4 percent
    5 sec CPU utilization:
      User                       0 percent
      Background                 0 percent
      Kernel                     1 percent
      Interrupt                  0 percent
      Idle                      99 percent
    Model                          RE-S-2X00x6
    Start time                     2017-08-08 23:13:18 PDT
    Uptime                         53 minutes, 25 seconds
    Last reboot reason             0x1:power cycle/failure
    Load averages:                 1 minute   5 minute  15 minute
                                       0.21       0.19       0.17
```

show chassis routing-engine (MX204 Router)

```
user@host> show chassis routing-engine

Routing Engine status:
    Temperature                52 degrees C / 125 degrees F
    CPU temperature            52 degrees C / 125 degrees F
    DRAM                    16341 MB (16384 MB installed)
    Memory utilization         11 percent
    5 sec CPU utilization:
      User                       0 percent
      Background                 0 percent
      Kernel                     0 percent
      Interrupt                  0 percent
      Idle                     100 percent
```

```
    1 min CPU utilization:
      User                      0 percent
      Background                0 percent
      Kernel                    0 percent
      Interrupt                 0 percent
      Idle                    100 percent
    5 min CPU utilization:
      User                      0 percent
      Background                0 percent
      Kernel                    0 percent
      Interrupt                 0 percent
      Idle                    100 percent
    15 min CPU utilization:
      User                      0 percent
      Background                0 percent
      Kernel                    0 percent
      Interrupt                 0 percent
      Idle                    100 percent
    Model                           RE-S-2X00x6
    Start time                      2017-11-04 00:30:31 PDT
    Uptime                          4 days, 7 hours, 17 minutes, 3 seconds
    Last reboot reason              0x1:power cycle/failure
    Load averages:                  1 minute   5 minute  15 minute
                                        0.17       0.12       0.13
```

show chassis routing-engine (T320 Router)

```
user@host> show chassis routing-engine
Slot 0:
    Current state                   Master
    Election priority               Master (default)
    Temperature                  51 degrees C / 123 degrees F
    CPU temperature              55 degrees C / 131 degrees F
    DRAM                       3584 MB
    Memory utilization           11 percent
    CPU utilization:
      User                        0 percent
      Background                  0 percent
      Kernel                      2 percent
      Interrupt                   0 percent
      Idle                       97 percent
    Model                           RE-A-2000
    Serial ID                       9009010618
    Start time                      2012-10-10 01:24:05 PDT
    Uptime                          5 days, 10 hours, 49 minutes, 23 seconds
    Last reboot reason              0x1:power cycle/failure
    Load averages:                  1 minute   5 minute  15 minute
                                        0.00       0.05       0.04
Routing Engine status:
  Slot 1:
    Current state                   Backup
    Election priority               Backup (default)
    Temperature                  45 degrees C / 113 degrees F
    CPU temperature              48 degrees C / 118 degrees F
    DRAM                       3584 MB
    Memory utilization            9 percent
    CPU utilization:
      User                        0 percent
      Background                  0 percent
      Kernel                      0 percent
      Interrupt                   0 percent
```

```
      Idle                      100 percent
    Model                           RE-A-2000
    Serial ID                       9009003642
    Start time                      2012-10-10 01:24:04 PDT
    Uptime                          5 days, 10 hours, 49 minutes, 28 seconds
    Last reboot reason              0x1:power cycle/failure
```

show chassis routing-engine (T640 Router)

```
user@host> show chassis routing-engine
Routing Engine status:
  Slot 0:
    Current state                   Master
    Election priority               Master (default)
    Temperature                  50 degrees C / 122 degrees F
    CPU temperature              58 degrees C / 136 degrees F
    DRAM                       3584 MB
    Memory utilization           14 percent
    CPU utilization:
      User                        1 percent
      Background                  0 percent
      Kernel                      4 percent
      Interrupt                   1 percent
      Idle                       95 percent
    Model                           RE-A-2000
    Serial ID                       1000686556
    Start time                      2012-10-10 01:24:02 PDT
    Uptime                          5 days, 10 hours, 50 minutes, 27 seconds
    Last reboot reason              0x1:power cycle/failure
    Load averages:                  1 minute   5 minute  15 minute
                                        1.24       0.33       0.12
Routing Engine status:
  Slot 1:
    Current state                   Backup
    Election priority               Backup (default)
    Temperature                  44 degrees C / 111 degrees F
    CPU temperature              49 degrees C / 120 degrees F
    DRAM                       3584 MB
    Memory utilization           12 percent
    CPU utilization:
      User                        0 percent
      Background                  0 percent
      Kernel                      0 percent
      Interrupt                   1 percent
      Idle                       99 percent
    Model                           RE-A-2000
    Serial ID                       1000702739
    Start time                      2012-10-10 01:24:02 PDT
    Uptime                          5 days, 10 hours, 50 minutes, 26 seconds
    Last reboot reason              0x1:power cycle/failure
```

show chassis routing-engine (T1600 Router)

```
user@host> show chassis routing-engine
Routing Engine status:
  Slot 0:
    Current state                   Master
    Election priority               Master (default)
    Temperature                  48 degrees C / 118 degrees F
    CPU temperature              58 degrees C / 136 degrees F
```

```
    DRAM                      3584 MB
    Memory utilization          13 percent
    CPU utilization:
      User                       0 percent
      Background                 0 percent
      Kernel                     3 percent
      Interrupt                  1 percent
      Idle                      96 percent
    Model                           RE-A-2000
    Serial ID                       1000704521
    Start time                      2012-10-10 01:23:41 PDT
    Uptime                          5 days, 10 hours, 46 minutes, 56 seconds
    Last reboot reason              0x1:power cycle/failure
    Load averages:                  1 minute   5 minute  15 minute
                                        0.05       0.03       0.01
Routing Engine status:
  Slot 1:
    Current state                   Backup
    Election priority               Backup (default)
    Temperature                 44 degrees C / 111 degrees F
    CPU temperature             48 degrees C / 118 degrees F
    DRAM                      3584 MB
    Memory utilization          12 percent
    CPU utilization:
      User                       0 percent
      Background                 0 percent
      Kernel                     0 percent
      Interrupt                  0 percent
      Idle                     100 percent
    Model                           RE-A-2000
    Serial ID                       9009006579
    Start time                      2012-10-10 01:23:42 PDT
    Uptime                          5 days, 10 hours, 46 minutes, 54 seconds
    Last reboot reason              0x1:power cycle/failure
```

show chassis routing-engine (T4000 Router)

```
user@host> show chassis routing-engine
Routing Engine status:
  Slot 0:
    Current state                   Master
    Election priority               Master (default)
    Temperature                 33 degrees C / 91 degrees F
    CPU temperature             50 degrees C / 122 degrees F
    DRAM                      8960 MB
    Memory utilization          18 percent
    CPU utilization:
      User                       0 percent
      Background                 0 percent
      Kernel                     4 percent
      Interrupt                  1 percent
      Idle                      95 percent
    Model                           RE-DUO-1800
    Serial ID                       P737F-002248
    Start time                      2012-02-09 22:49:53 PST
    Uptime                          2 hours, 21 minutes, 35 seconds
    Last reboot reason              Router rebooted after a normal shutdown.
    Load averages:                  1 minute   5 minute  15 minute
                                        0.00       0.04       0.00
Routing Engine status:
  Slot 1:
```

```
    Current state                  Backup
    Election priority              Backup (default)
    Temperature                 32 degrees C / 89 degrees F
    CPU temperature             46 degrees C / 114 degrees F
    DRAM                      8960 MB
    Memory utilization          24 percent
    CPU utilization:
      User                       0 percent
      Background                 0 percent
      Kernel                     0 percent
      Interrupt                  0 percent
      Idle                      99 percent
    Model                          RE-DUO-1800
    Serial ID                      P737F-002653
    Start time                     2012-02-08 20:12:51 PST
    Uptime                         1 day, 4 hours, 58 minutes, 28 seconds
    Last reboot reason             Router rebooted after a normal shutdown.
```

show chassis routing-engine (TX Matrix Router)

```
user@host> show chassis routing-engine
scc-re0:
--------------------------------------------------------------------------
Routing Engine status:
  Slot 0:
    Current state                  Master
    Election priority              Master (default)
    Temperature                 34 degrees C / 93 degrees F
    CPU temperature             33 degrees C / 91 degrees F
    DRAM                      2048 MB
    Memory utilization          12 percent
    CPU utilization:
      User                       0 percent
      Background                 0 percent
      Kernel                     2 percent
      Interrupt                  0 percent
      Idle                      98 percent
    Model                          RE-4.0
    Serial ID                      P11123900153
    Start time                     2004-08-05 18:42:05 PDT
    Uptime                       9 days, 22 hours, 49 minutes, 50 seconds
    Last reboot reason             Router rebooted after a normal shutdown
    Load averages:                 1 minute   5 minute  15 minute
                                       0.00       0.08       0.07

lcc0-re0:
--------------------------------------------------------------------------
Routing Engine status:
  Slot 0:
    Current state                  Master
    Election priority              Master (default)
    Temperature                 33 degrees C / 91 degrees F
    CPU temperature             30 degrees C / 86 degrees F
    DRAM                      2048 MB
    Memory utilization          12 percent
    CPU utilization:
      User                       0 percent
      Background                 0 percent
      Kernel                     1 percent
      Interrupt                  0 percent
      Idle                      98 percent
```

```
    Model                           RE-3.0
    Serial ID                       210865700363
    Start time                      2004-08-05 18:42:05 PDT
    Uptime                         9 days, 22 hours, 48 minutes, 20 seconds
    Last reboot reason              Router rebooted after a normal shutdown
    Load averages:                  1 minute   5 minute  15 minute
                                        0.00       0.02       0.00

lcc2-re0:
--------------------------------------------------------------------------
Routing Engine status:
  Slot 0:
    Current state                   Master
    Election priority               Master (default)
    Temperature                  34 degrees C / 93 degrees F
    CPU temperature              35 degrees C / 95 degrees F
    DRAM                       2048 MB
    Memory utilization           12 percent
    CPU utilization:
      User                        0 percent
      Background                  0 percent
      Kernel                      2 percent
      Interrupt                   0 percent
      Idle                       98 percent
    Model                          RE-4.0
    Serial ID                      P11123900126
    Start time                     2004-08-05 18:42:05 PDT
    Uptime                         9 days, 22 hours, 49 minutes, 4 seconds
    Last reboot reason              Router rebooted after a normal shutdown
    Load averages:                  1 minute   5 minute  15 minute
                                        0.01       0.01       0.0
```

show chassis routing-engine lcc (TX Matrix Router)

```
user@host> show chassis routing-engine 0 lcc 0
lcc0-re0:
--------------------------------------------------------------------------------
Routing Engine status:
  Slot 0:
    Current state                   Master
    Election priority               Master (default)
    Temperature                  33 degrees C / 91 degrees F
    CPU temperature              30 degrees C / 86 degrees F
    DRAM                       2048 MB
    Memory utilization           12 percent
    CPU utilization:
      User                        0 percent
      Background                  0 percent
      Kernel                      1 percent
      Interrupt                   0 percent
      Idle                       98 percent
    Model                          RE-3.0
    Serial ID                      210865700363
    Start time                     2004-08-05 18:42:05 PDT
    Uptime                         7 days, 22 hours, 49 minutes, 6 seconds
    Last reboot reason              Router rebooted after a normal shutdown
    Load averages:                  1 minute   5 minute  15 minute
                                        0.00       0.00       0.00
```

show chassis routing-engine bios (TX Matrix Router)

```
user@host> show chassis routing-engine bios
scc-re0:
--------------------------------------------------------------------------
Routing Engine BIOS Version: V1.0.0
lcc0-re0:
--------------------------------------------------------------------------
Routing Engine BIOS Version: V1.0.17
lcc2-re0:
--------------------------------------------------------------------------
Routing Engine BIOS Version: V1.0.0
```

show chassis routing-engine (TX Matrix Plus Router)

```
user@host> show chassis routing-engine
sfc0-re0:
--------------------------------------------------------------------------
Routing Engine status:
  Slot 0:
    Current state                  Master
    Election priority              Master (default)
    Temperature                 27 degrees C / 80 degrees F
    CPU temperature             42 degrees C / 107 degrees F
    DRAM                      3327 MB
    Memory utilization          12 percent
    CPU utilization:
      User                       0 percent
      Background                 0 percent
      Kernel                     2 percent
      Interrupt                  0 percent
      Idle                      98 percent
    Model                          RE-TXP-SFC
    Serial ID                      737A-1024
    Start time                     2009-05-11 17:39:49 PDT
    Uptime                         3 hours, 45 minutes, 25 seconds
    Last reboot reason             Router rebooted after a normal shutdown.
    Load averages:                 1 minute   5 minute  15 minute
                                       0.00       0.00       0.00
Routing Engine status:
  Slot 1:
    Current state                  Backup
    Election priority              Backup (default)
    Temperature                 29 degrees C / 84 degrees F
    CPU temperature             43 degrees C / 109 degrees F
    DRAM                      3327 MB
    Memory utilization          11 percent
    CPU utilization:
      User                       0 percent
      Background                 0 percent
      Kernel                     0 percent
      Interrupt                  0 percent
      Idle                     100 percent
    Model                          RE-TXP-SFC
    Serial ID                      737A-1024
    Start time                     2009-05-11 17:08:54 PDT
    Uptime                         4 hours, 16 minutes, 52 seconds
    Last reboot reason             0x1:power cycle/failure

lcc0-re0:
```

```
---------------------------------------------------------------------------
Routing Engine status:
  Slot 0:
    Current state                  Master
    Election priority              Master (default)
    Temperature                 30 degrees C / 86 degrees F
    CPU temperature             43 degrees C / 109 degrees F
    DRAM                      3327 MB
    Memory utilization           9 percent
    CPU utilization:
      User                       0 percent
      Background                 0 percent
      Kernel                     2 percent
      Interrupt                  0 percent
      Idle                      98 percent
    Model                          RE-TXP-LCC
    Serial ID                      737F-1024
    Start time                     2009-05-11 17:40:32 PDT
    Uptime                         3 hours, 44 minutes, 51 seconds
    Last reboot reason             Router rebooted after a normal shutdown.
    Load averages:                 1 minute   5 minute  15 minute
                                       0.00       0.00       0.00
Routing Engine status:
  Slot 1:
    Current state                  Backup
    Election priority              Backup (default)
    Temperature                 30 degrees C / 86 degrees F
    CPU temperature             43 degrees C / 109 degrees F
    DRAM                      3327 MB
    Memory utilization           9 percent
    CPU utilization:
      User                       0 percent
      Background                 0 percent
      Kernel                     0 percent
      Interrupt                  0 percent
      Idle                     100 percent
    Model                          RE-TXP-LCC
    Serial ID                      737F-1024
    Start time                     2009-05-06 17:31:32 PDT
    Uptime                         5 days, 3 hours, 54 minutes, 19 seconds
    Last reboot reason             Router rebooted after a normal shutdown.
```

show chassis routing-engine lcc (TX Matrix Plus Router)

```
user@host> show chassis routing-engine 0 lcc 0
lcc0-re0:
---------------------------------------------------------------------------
Routing Engine status:
  Slot 0:
    Current state                  Master
    Election priority              Master (default)
    Temperature                 30 degrees C / 86 degrees F
    CPU temperature             43 degrees C / 109 degrees F
    DRAM                      3327 MB
    Memory utilization           9 percent
    CPU utilization:
      User                       0 percent
      Background                 0 percent
      Kernel                     2 percent
      Interrupt                  0 percent
      Idle                      98 percent
```

```
    Model                           RE-TXP-LCC
    Serial ID                       737F-1024
    Start time                      2009-05-11 17:40:32 PDT
    Uptime                          3 hours, 45 minutes, 26 seconds
    Last reboot reason              Router rebooted after a normal shutdown.
    Load averages:                  1 minute   5 minute  15 minute
                                        0.00       0.00       0.00
Routing Engine status:
  Slot 1:
    Current state                   Backup
    Election priority               Backup (default)
    Temperature                 30 degrees C / 86 degrees F
    CPU temperature             43 degrees C / 109 degrees F
    DRAM                      3327 MB
    Memory utilization           9 percent
    CPU utilization:
      User                       0 percent
      Background                 0 percent
      Kernel                     0 percent
      Interrupt                  0 percent
      Idle                     100 percent
    Model                           RE-TXP-LCC
    Serial ID                       737F-1024
    Start time                      2009-05-06 17:31:32 PDT
    Uptime                          5 days, 3 hours, 54 minutes, 59 seconds
    Last reboot reason              Router rebooted after a normal shutdown.
```

show chassis routing-engine bios (TX Matrix Plus Router)

```
user@host> show chassis routing-engine bios
sfc0-re0:
--------------------------------------------------------------------------
    Routing Engine BIOS Version: V0.0.Z

lcc0-re0:
--------------------------------------------------------------------------
    Routing Engine BIOS Version: V0.0.N
```

show chassis routing-engine (QFX Series)

```
user@switch> show chassis routing-engine
Routing Engine status:
Slot 0:
Current state Master
Election priority Master (default)
DRAM 2820 MB
Memory utilization 49 percent
CPU utilization:
User 1 percent
Background 0 percent
Kernel 1 percent
Interrupt 0 percent
Idle 97 percent
Model QFX3500-48S4Q
Serial ID S/N ED3709
Uptime 3 days, 4 hours, 29 minutes, 42 seconds
Last reboot reason 0x200:chassis control reset
Load averages: 1 minute 5 minute 15 minute
0.37 0.26 0.19
```

show chassis routing-engine (OCX Series)

```
user@switch> show chassis routing-engine
Routing Engine status:
Slot 0:
Current state Master
Election priority Master (default)
DRAM 2820 MB
Memory utilization 49 percent
CPU utilization:
User 1 percent
Background 0 percent
Kernel 1 percent
Interrupt 0 percent
Idle 97 percent
Model OCX-1100-48SX-AFI
Serial ID S/N ED3709
Uptime 3 days, 4 hours, 29 minutes, 42 seconds
Last reboot reason 0x200:chassis control reset
Load averages: 1 minute 5 minute 15 minute
0.37 0.26 0.19
```

show chassis routing engine interconnect-device (QFabric Systems)

```
user@switch> show chassis routing-engine
Routing Engine status:
  Slot 0:
    Current state                  Master
    Election priority              Master (default)
    Temperature                 48 degrees C / 118 degrees F
    DRAM                      3312 MB
    Memory utilization          63 percent
    CPU utilization:
      User                      14 percent
      Background                 0 percent
      Kernel                     5 percent
      Interrupt                  0 percent
      Idle                      81 percent
    Model                          RE-QFXC08-CB4S
    Serial ID                      BUILTIN
    Start time                     2011-07-06 13:26:15 UTC
    Uptime                         11 hours, 24 minutes, 57 seconds
    Last reboot reason             0x4:reset-button reset
    Load averages:                 1 minute   5 minute  15 minute
                                       2.62       2.31       2.28
Routing Engine status:
  Slot 1:
    Current state                  Backup
    Election priority              Backup (default)
    Temperature                 39 degrees C / 102 degrees F
    DRAM                      3312 MB
    Memory utilization          59 percent
    CPU utilization:
      User                       9 percent
      Background                 0 percent
      Kernel                     1 percent
      Interrupt                  0 percent
      Idle                      91 percent
    Model                          RE-QFXC08-CB4S
    Serial ID                      BUILTIN
```

```
    Start time                      2011-07-06 13:24:58 UTC
    Uptime                          11 hours, 26 minutes, 18 seconds
    Last reboot reason              0x4:reset-button reset
```

show chassis routing-engine (PTX Series Packet Transport Router)

```
user@switch> show chassis routing-engine
Routing Engine status:
  Slot 0:
    Current state                   Master
    Election priority               Master (default)
    Temperature                  60 degrees C / 140 degrees F
    CPU temperature              76 degrees C / 168 degrees F
    DRAM                       17152 MB
    Memory utilization           11 percent
    CPU utilization:
      User                        0 percent
      Background                  0 percent
      Kernel                      4 percent
      Interrupt                   0 percent
      Idle                       95 percent
    Model                          RE-DUO-2600
    Serial ID                      P737A-002231
    Start time                     2011-12-21 16:54:37 PST
    Uptime                         25 minutes, 44 seconds
    Last reboot reason             Router rebooted after a normal shutdown.
    Load averages:                 1 minute   5 minute  15 minute
                                       0.01       0.02       0.06
Routing Engine status:
  Slot 1:
    Current state                   Backup
    Election priority               Backup (default)
    Temperature                  50 degrees C / 122 degrees F
    CPU temperature              64 degrees C / 147 degrees F
    DRAM                       17152 MB
    Memory utilization           10 percent
    CPU utilization:
      User                        0 percent
      Background                  0 percent
      Kernel                      0 percent
      Interrupt                   0 percent
      Idle                       99 percent
    Model                          RE-DUO-2600
    Serial ID                      P737A-002438
    Start time                     2011-12-21 16:52:26 PST
    Uptime                         27 minutes, 49 seconds
    Last reboot reason             Router rebooted after a normal shutdown.
```

show chassis routing-engine (EX9200 Switch)

```
user@switch> show chassis routing-engine
Routing Engine status:
Slot 0:
  Current state                   Master
  Election priority               Master (default)
  Temperature                  35 degrees C / 95 degrees F
  CPU temperature              33 degrees C / 91 degrees F
  DRAM                       8157 MB
    Installed Memory         8192 MB
```

```
  Memory utilization          18 percent
CPU utilization:
  User                       1 percent
  Background                 0 percent
  Kernel                     4 percent
  Interrupt                  1 percent
  Idle                      94 percent
Model                          RE-S-EX9200-1800X4
Serial ID                      9009119555
Start time                     2014-03-12 14:58:05 UTC
Uptime                         1 hour, 41 minutes, 51 seconds
Last reboot reason             Router rebooted after a normal shutdown.
Load averages:                 1 minute   5 minute  15 minute
                               0.02       0.02       0.00
Routing Engine status:
Slot 1:
  Current state                  Backup
  Election priority              Backup (default)

[...Output truncasted...]
```

show chassis routing-engine (EX9251 Switch)

```
user@switch> show chassis routing-engine
Routing Engine status:
    Temperature                 50 degrees C / 122 degrees F
    CPU temperature             50 degrees C / 122 degrees F
    DRAM                     16340 MB (16384 MB installed)
    Memory utilization           6 percent
    5 sec CPU utilization:
      User                       2 percent
      Background                 0 percent
      Kernel                    19 percent
      Interrupt                  0 percent
      Idle                      79 percent
    1 min CPU utilization:
      User                       2 percent
      Background                 0 percent
      Kernel                    19 percent
      Interrupt                  0 percent
      Idle                      79 percent
    5 min CPU utilization:
      User                       2 percent
      Background                 0 percent
      Kernel                    19 percent
      Interrupt                  0 percent
      Idle                      79 percent
    15 min CPU utilization:
      User                       2 percent
      Background                 0 percent
      Kernel                    19 percent
      Interrupt                  0 percent
      Idle                      79 percent
    Model                          RE-S-2X00x6
    Start time                     2018-03-08 05:11:33 PST
    Uptime                         10 days, 18 hours, 59 minutes, 15 seconds
    Last reboot reason             0x4000:VJUNOS reboot
    Load averages:                 1 minute   5 minute  15 minute
                                       1.06       1.09       1.08
```

show chassis routing-engine (ACX2000 Universal Metro Router)

```
user@host> show chassis routing-engine
Routing Engine status:
    Temperature                 53 degrees C / 127 degrees F
    DRAM                      1536 MB
    Memory utilization          25 percent
    CPU utilization:
      User                       0 percent
      Background                 0 percent
      Kernel                     0 percent
      Interrupt                  1 percent
      Idle                      99 percent
    Model                           RE-ACX-2000
    Start time                      2012-05-09 00:57:07 PDT
    Uptime                          5 days, 3 hours, 16 minutes, 15 seconds
    Last reboot reason              Router rebooted after a normal shutdown.
    Load averages:                  1 minute   5 minute  15 minute
                                        0.00       0.03       0.05
```

show chassis routing-engine (ACX1000 Universal Metro Router)

```
user@host> show chassis routing-engine
Routing Engine status:
    Temperature                 36 degrees C / 96 degrees F
    DRAM                       768 MB
    Memory utilization          50 percent
    CPU utilization:
      User                       3 percent
      Background                 0 percent
      Kernel                     6 percent
      Interrupt                  0 percent
      Idle                      91 percent
    Model                           RE-ACX-1000
    Start time                      2012-05-10 07:12:23 PDT
    Uptime                          4 days, 10 hours, 46 minutes, 53 seconds
    Last reboot reason              Router rebooted after a normal shutdown.
    Load averages:                  1 minute   5 minute  15 minute
                                        0.00       0.00       0.00
```

show chassis routing-engine (Displaying the guest reboot reason on PTX5000,MX240, MX480, MX960< MX2010, and MX2020)

```
user@host> show chassis routing-engine re0 | match "Last reboot reason"
Last reboot reason 0x4000:VJUNOS reboot
```

show chassis satellite

Syntax

show chassis satellite
[device-alias *device-alias* | fpc-slot *fpc-slot* | cluster *cluster-name*]
[brief | detail | extensive | terse]
<since *time*>

Release Information

Command introduced in Junos OS Release 14.2R3 for Junos Fusion Provider Edge.
Command introduced in Junos OS Release 16.1R1 for Junos Fusion Enterprise.
Command introduced in Junos OS Release 17.2R1 for Junos Fusion Data Center.

Description

Display the status of the satellite device connections in a Junos Fusion.

Options

none—(Same as **brief**) Display satellite device connection information

device-alias *device-alias*—(Optional) Display satellite device connection information for the satellite device using the specified device alias only.

fpc-slot *fpc-slot*—(Optional) Display satellite device connection information for the satellite device using the specified FPC slot number only.

cluster *cluster-name*—(Optional) Display satellite device connection information for the satellite devices in the specified satellite device cluster only.

brief | detail | extensive | terse—(Optional) Display the specified level of output.

since *time*—(Optional) Display the satellite devices that have been added to the Junos Fusion on or after a certain date or time, in *YYYY-MM-DD.HH:MM:SS* format.

To display all satellite devices added since a specified date, enter the specific date. For instance, to display all satellite devices added on or after December 22nd, 2015, enter **2015-12-22** as the *time*.

To display all satellite devices added since a specified time, enter the specific date and time. For instance, to display all satellite devices added on or after 11:01AM on December 22nd, 2015, enter **2015-12-22.11:01:00** as the *time*.

Required Privilege Level

view

Related Documentation

- *Configuring or Expanding a Junos Fusion Enterprise*
- *Configuring Junos Fusion Provider Edge*

List of Sample Output

show chassis satellite on page 688
show chassis satellite device-alias on page 689
show chassis satellite fpc-slot 130 on page 689
show chassis satellite terse on page 689

show chassis satellite detail on page 689

Output Fields Table 20 on page 683 lists the output fields for the **show chassis satellite** command. Output fields are listed in the approximate order in which they appear.

Table 20: show chassis satellite Output Fields

Field Name	Field Description	Level of Output
Fields for Interface		
Alias	The satellite device's alias. The satellite device's alias is configured using the **set chassis satellite-management fpc *slot-id*** alias ***alias*** statement.	brief extensive none
Slot	The slot number of the satellite device. The slot number can be configured using the **set chassis satellite-management fpc *slot-id*** statement..	brief terse extensive none

Table 20: show chassis satellite Output Fields (continued)

Field Name	Field Description	Level of Output
Device State	The state of the satellite device within the Junos Fusion. The most common device states: • **Online**—the satellite device is online and active. This is the satellite device state during normal operating procedure. • **Offline**—the satellite device is offline and not detected. This state is typically seen when the satellite device has been disconnected from the aggregation device, or when all cascade or uplink ports connecting the satellite device to the aggregation device are down. • **Present**—the satellite device is recognized by the aggregation device, but is not online. This state is typically seen before a satellite device goes online, or while satellite device configuration is in progress or finalizing. • **Rebooting**—the satellite device is rebooting. • **Disable**—the satellite device has been disabled. • **Misconfig**—the satellite device is not properly configured. This state is typically seen when the system ID, cascade port, or FPC slot ID defined for the satellite device has a misconfiguration. • **Miswire**—the satellite device is miswired. This state is typically seen when a satellite device is wired to two aggregation devices but is not configured for multihoming. Use **show chassis satellite detail** to gather more information on the issue when the device state is **Miswire**. Other less common device states include: • **ModeChanging**—the device is converting from a standalone device to a satellite device, or from a satellite device to a standalone device. • **ModeChangeFail**—the mode change operation failed. • **MinorUpgradeOn**—A minor satellite software upgrade is in progress. • **MajorUpgradeOn**—A major satellite software upgrade is in progress. • **Upgrade-pending**—the satellite device is waiting for a satellite software upgrade. • **ProvSessionDn**—the provisioning session is down. • **ReconcileState**—the satellite provisioning daemon has restarted and is reconciling the satellite device state.	brief terse extensive none
Cascade Ports	The cascade port or ports. A cascade port is a port on the aggregation device that connects to a satellite device in a Junos Fusion.	brief extensive none

Table 20: show chassis satellite Output Fields (continued)

Field Name	Field Description	Level of Output
Port State	The state of the cascade port on the aggregation device. Port states include: • **online**—the cascade port is online and active. This is the port state during normal operating procedure. • **txUpRxDn**—Tx or Rx forwarding is disabled on the cascade port. This state is often seen when a second aggregation device is added to a Junos Fusion topology, and the devices in the Junos Fusion are synchronizing to the new topology. • **miswire**—the cascade port is miswired. This state is typically seen when a satellite device is interconnected to two aggregation devices but multihoming is not configured. Use **show chassis satellite detail** to gather more information on the issue when the device state is **Miswire**. • **present**—The cascade port recognized the satellite device and is up. • **misconfig**—the cascade port is assigned, but this interface is not working correctly due to a misconfiguration. • **down**—the cascade port is down. • **offline**—the satellite device was previously recognized from this interface, but is no longer present. • **absent**—the cascade port is configured but no satellite device is detected on the interface.	brief extensive none
Extended Ports Total	The total number of extended ports on the satellite device. An extended port is a network-facing port on the satellite device that sends and receives network traffic for the Junos Fusion.	brief none terse
Extended Ports Up	The number of active extended ports.	brief none terse
Model	The hardware model of the satellite device.	terse
Version	The version of satellite device software running on the satellite device.	terse
Satellite Alias	The satellite device's alias. The satellite device's alias is configured using the **set chassis satellite-management fpc *slot-id*** alias ***alias*** statement.	detail
FPC slot	The FPC slot number of the satellite device. The slot number can be configured using the **set chassis satellite-management fpc *slot-id*** statement.	detail

Table 20: show chassis satellite Output Fields (continued)

Field Name	Field Description	Level of Output
Operational State	The operational state of the satellite device. The state UFDDown indicates that uplink failure detection disabled the satellite device's extended ports due to an uplink port failure.	detail
Product Model	The hardware model of the satellite device.	detail
Product Family	The product family of the satellite device.	detail
Serial number	The serial number of the satellite device.	detail
System ID	The system ID of the satellite device. The system ID is also the satellite device's MAC address.	detail
Software package version	The satellite software version running on the satellite device.	detail
Host software version	The host operating system software version running on the satellite device.	detail
Management Address	The management IP address of the satellite device. This management IP address belongs to an internal routing instance. This management address is assigned by the control plane internally based on FPC slot ID and is used for the control plane traffic between the aggregation device and satellite device. All management in a Junos Fusion should be done through the aggregation device. The management IP address of the satellite device is useful for debugging purposes by expert users only.	detail
UFD config state	Uplink failure detection configuration state.	detail
Minimum link	Uplink failure detection minimum active uplink port setting.	detail
Holdddown timer (seconds)	Uplink failure detection holddown timer setting, in seconds.	detail
UFD operational state	Uplink failure detection operational state.	detail

Table 20: show chassis satellite Output Fields (continued)

Field Name	Field Description	Level of Output
Candidate uplink interfaces (pic/port)	Uplink failure detection candidate uplink interfaces.	detail
Extended Ports	The number of extended ports for the satellite device. The number on the left is the total number of extended ports, and the number on the right is the total number of extended ports currently in the up state.	extensive
When	The date and time of the event.	extensive
Event	The event.	extensive
Action	The actions that resulted from the event.	extensive
Fields for Cascade interfaces		
Interface Name	The name of the cascade interface on the aggregation device.	detail
State	The state of the cascade interface.	detail
Uplink Interface	The name of the uplink interface on the satellite device.	detail
Adjacency state	The adjacency state of the cascade to uplink interface link.	detail
Last transition	The amount of time that has passed since the last transition of the cascade to uplink interface link.	detail
Adjacency down count (Interface Name)	The number of times the cascade to uplink interface link has gone into the down state.	detail
RX Packet	The number of packets received on the cascade interface.	detail
Last received packet	The amount of time that has passed since the last packet was received on the cascade interface.	detail
Peer adjacency information	The amount of time that has passed since the last peer adjacency transition.	detail
Adjacency down count (Peer adjacency information)	The number of times the cascade to uplink interface link has gone into the down state.	detail

Table 20: show chassis satellite Output Fields (continued)

Field Name	Field Description	Level of Output
Last down cause	The cause of the last adjacency failure.	detail
SDPD restart detected	The number of times that the satellite device protocol process has restarted.	detail
Fields for Process information		
Process Name	The name of the process.	detail
PID	The process identification number of the process.	detail
State	The current state of the process.	detail
Number of restart detected	The number of times the process has restarted.	detail
Uptime	The amount of time that the process has been running.	detail

Sample Output

show chassis satellite

```
user@aggregation-device> show chassis satellite
                         Device          Cascade      Port       Extended Ports
Alias            Slot    State           Ports        State      Total/Up
qfx5100-24q-01   100     Online          xe-0/0/1     online     9/2
                                         xe-0/3/0     online
qfx5100-24q-02   101     Online          xe-0/0/2     online     20/12
                                         xe-0/3/1     online
qfx5100-24q-03   102     Online          xe-0/0/3     online     16/6
                                         xe-0/3/2     online
qfx5100-24q-04   103     Online          xe-0/0/4     online     16/4
                                         xe-0/3/3     online
qfx5100-24q-05   104     Online          xe-0/0/5     online     13/3
                                         xe-0/3/4     online
qfx5100-24q-06   105     Online          xe-0/0/6     online     24/15
                                         xe-0/3/5     online
qfx5100-24q-07   106     Online          xe-0/0/7     online     24/15
                                         xe-0/3/6     online
qfx5100-24q-08   107     Online          xe-0/0/8     online     21/12
                                         xe-0/3/7     online
ex4300-01        109     Online          xe-1/0/1     online     49/2
ex4300-02        110     Online          xe-1/0/2     online     49/2
ex4300-03        111     Online          xe-1/0/3     online     49/2
ex4300-04        112     Online          xe-1/0/4     online     49/11
ex4300-05        113     Online          xe-1/0/5     online     49/11
ex4300-06        114     Online          xe-1/0/6     online     49/11
ex4300-07        115     Online          xe-1/0/7     online     49/11
ex4300-08        116     Online          xe-1/1/0     online     49/11
ex4300-09        117     Online          xe-1/1/1     online     49/11
ex4300-10        118     Online          xe-1/1/2     online     49/11
```

```
ex4300-11        119    Online          xe-1/1/3     online     49/11
ex4300-12        120    Online          xe-1/1/4     online     49/11
ex4300-13        121    Online          xe-1/1/5     online     49/11
ex4300-14        122    Online          xe-1/1/6     online     49/11
ex4300-15        123    Online          xe-1/1/7     online     49/11
ex4300-16        124    Online          xe-1/2/1     online     49/11
ex4300-17        125    Online          xe-1/2/2     online     49/11
ex4300-18        126    Online          xe-1/2/3     online     49/2
ex4300-19        127    Online          xe-1/2/4     online     49/1
ex4300-20        128    Online          xe-1/2/5     online     49/1
ex4300-21        129    Online          xe-1/2/6     online     49/1
ex4300-22        130    Online          xe-1/2/7     online     49/1
```

Sample Output

show chassis satellite device-alias

```
user@aggregation-device> show chassis satellite device-alias ex4300-22
                         Device          Cascade      Port       Extended Ports
Alias            Slot    State           Ports        State      Total/Up
    ex4300-22    130     Online          xe-0/2/7     online     49/1
```

Sample Output

show chassis satellite fpc-slot 130

```
user@aggregation-device> show chassis satellite fpc-slot 130
                         Device          Cascade      Port       Extended Ports
Alias            Slot    State           Ports        State      Total/Up
ex4300-22        101     Online          xe-0/0/2     online     20/12
                                         xe-0/3/1     online
```

Sample Output

show chassis satellite terse

```
user@aggregation-device> show chassis satellite terse
       Device                                Extended Ports
Slot   State            Model                Total/Up     Version
101    Online           QFX5100-48S-6Q       7/7          3.0R1.1
102    Online           QFX5100-48S-6Q       7/7          3.0R1.1
103    Online           QFX5100-48S-6Q       6/5          3.0R1.1
104    Online           QFX5100-48S-6Q       14/14        3.0R1.1
105    Online           QFX5100-48S-6Q       18/18        3.0R1.1
106    Online           QFX5100-48S-6Q       17/16        3.0R1.1
107    Online           EX4300-48T           52/6         3.0R1.1
108    Online           EX4300-48T           52/15        3.0R1.1
109    Online           EX4300-48T           51/14        3.0R1.1
110    Online           EX4300-48T           51/14        3.0R1.1
111    Online           EX4300-48T           51/13        3.0R1.1
112    Online           EX4300-48T           51/12        3.0R1.1
113    Online           EX4300-48T           51/13        3.0R1.1
114    Online           QFX5100-24Q-2P       17/13        3.0R1.1
```

show chassis satellite detail

```
user@aggregation-device> show chassis satellite detail
Satellite Alias: qfx5100-48s-02
FPC Slot: 101
```

```
Operational State: Online
Product Model: QFX5100-48S-6Q
Product Family: i386
Serial number: ABC123DEF456
System id: 00:11:22:aa:bb:cc
Software package version: 3.0R1.1
Host software version: 1.0.0
Management Address: 172.16.0.101/32
Cascade interfaces:
    Interface Name: xe-0/0/2 State: online
        Uplink Interface: xe-001/0/48:0
        Adjacency state: Two-Way
        Last transition: 00:10:22
        Adjacency down count: 0
        Rx Packet: 65 Last received packet: 00:00:02
        Peer adjacency information: 00:10:22
            Adjacency down count: 3
            Last down cause: Interface Down
            SDPD restart detected: 3
    Interface Name: xe-0/2/1 State: online
        Uplink Interface: xe-001/0/48:1
        Adjacency state: Two-Way
        Last transition: 00:10:22
        Adjacency down count: 0
        Rx Packet: 64 Last received packet: 00:00:02
        Peer adjacency information: 00:10:22
            Adjacency down count: 3
            Last down cause: Interface Down
            SDPD restart detected: 3
    Interface Name: xe-2/0/0 State: online
        Uplink Interface: xe-001/0/48:2
        Adjacency state: Two-Way
        Last transition: 00:10:22
        Adjacency down count: 0
        Rx Packet: 65 Last received packet: 00:00:02
        Peer adjacency information: 00:10:22
            Adjacency down count: 3
            Last down cause: Interface Down
            SDPD restart detected: 3
    Interface Name: xe-2/1/6 State: online
        Uplink Interface: xe-001/0/48:3
        Adjacency state: Two-Way
        Last transition: 00:10:22
        Adjacency down count: 0
        Rx Packet: 65 Last received packet: 00:00:02
        Peer adjacency information: 00:10:22
            Adjacency down count: 3
            Last down cause: Hold timer expire
            SDPD restart detected: 3
Process information:
    Process Name: Provisioning PID: 6716 State: Running
        Number of restart detected: 0
        Uptime: 00:10:22
    Process Name: PFE PID: 3194 State: Running
        Number of restart detected: 0
        Uptime: 00:10:22
UFD config state: Enable (persist), Minimum link: 1,
Holdddown timer (seconds): 6
UFD operational state: Enable
Candidate uplink interfaces (pic/port):
        1/0
```

```
        1/1
        1/2
        1/3
        2/0
        2/1
        2/2
        2/3

Satellite Alias: qfx5100-48s-03
FPC Slot: 102
Operational State: Online
Product Model: QFX5100-48S-6Q
Product Family: i386
Serial number: ABCDEFG12345
System id: 00:11:22:aa:ba:cc
Software package version: 3.0R1.1
Host software version: 1.0.0
Management Address: 172.16.0.102/32
Cascade interfaces:
    Interface Name: xe-0/0/3 State: online
        Uplink Interface: xe-002/0/48:0
        Adjacency state: Two-Way
        Last transition: 00:10:22
        Adjacency down count: 0
        Rx Packet: 65 Last received packet: 00:00:02
        Peer adjacency information: 00:10:22
            Adjacency down count: 3
            Last down cause: Interface Down
            SDPD restart detected: 3
    Interface Name: xe-0/2/2 State: online
        Uplink Interface: xe-002/0/48:1
        Adjacency state: Two-Way
        Last transition: 00:10:22
        Adjacency down count: 0
        Rx Packet: 65 Last received packet: 00:00:02
        Peer adjacency information: 00:10:22
            Adjacency down count: 3
            Last down cause: Interface Down
            SDPD restart detected: 3
    Interface Name: xe-2/0/1 State: online
        Uplink Interface: xe-002/0/48:2
        Adjacency state: Two-Way
        Last transition: 00:10:22
        Adjacency down count: 0
        Rx Packet: 65 Last received packet: 00:00:02
        Peer adjacency information: 00:10:22
            Adjacency down count: 3
            Last down cause: Interface Down
            SDPD restart detected: 3
    Interface Name: xe-2/1/7 State: online
        Uplink Interface: xe-002/0/48:3
        Adjacency state: Two-Way
        Last transition: 00:10:22
        Adjacency down count: 0
        Rx Packet: 65 Last received packet: 00:00:02
        Peer adjacency information: 00:10:22
            Adjacency down count: 3
            Last down cause: Interface Down
            SDPD restart detected: 3
Process information:
    Process Name: Provisioning PID: 6667 State: Running
```

```
        Number of restart detected: 0
        Uptime: 00:10:22
    Process Name: PFE PID: 3155 State: Running
        Number of restart detected: 0
        Uptime: 00:10:22
<additional output removed for brevity>
```

show chassis satellite extended-port

Syntax

show chassis satellite extended-port *interface-name*
<fpc-slot *fpc-slot*>
<interface-name *interface-name*>
[brief | detail | extensive | terse]
<since *time*>

Release Information

Command introduced in Junos OS Release 14.2R3 for Junos Fusion Provider Edge.
Command introduced in Junos OS Release 16.1R1 for Junos Fusion Enterprise.
Command introduced in Junos OS Release 17.2R1 for Junos Fusion Data Center.

Description

Display the status of the extended ports on the satellite devices in a Junos Fusion.

The extended ports are the network-facing ports on satellite devices that send and receive network traffic for a Junos Fusion.

Options

none—(Same as **brief** and **terse**) Display extended port status information.

brief | detail | extensive | terse—(Optional) Display the specified level of output.

fpc *fpc-slot*—Display extended port status information for the specified FPC slot only. In a Junos Fusion, one FPC slot ID is assigned to each satellite device, so you can use this option to display extended port status information for all extended ports on one satellite device.

interface-name *interface-name*—Display extended port status information for the extended port interface only.

history—Display extended port history.

statistics—Display extended port statistics.

since *time*—(Optional) Display extended port status information for the satellite devices that have been added to the Junos Fusion on or after a certain date or time, which is entered in the *YYYY-MM-DD.HH:MM:SS* format.

To display extended port status information for all satellite devices added since a specified date, enter the specific date as the time as the *time*. For instance, **2015-12-22**.

To display extended port status information for all satellite devices added since a specified time, enter the specific date and time as the *time*. For instance, **2015-12-22.11:01:00**.

Required Privilege Level

view

Related Documentation

- *Configuring or Expanding a Junos Fusion Enterprise*
- *Configuring Junos Fusion Provider Edge*

List of Sample Output show chassis satellite extended-port on page 695

Output Fields Table 21 on page 694 lists the output fields for the **show chassis satellite extended-port** command. Output fields are listed in the approximate order in which they appear.

Table 21: show chassis satellite extended-port Output Fields

Field Name	Field Description	Level of Output
Fields for Interface		
Name	The interface name of the extended port.	brief terse detail extensive none
State	The state of the extended port.	brief terse detail extensive none
Rx Request State	The receive request state of the extended port.	brief terse detail extensive none
Tx Request State	The transmit request state of the extended port.	brief terse detail extensive none
Admin State	The administrative state of the extended port.	brief terse detail extensive none
Op State	The operational state of the extended port.	brief terse detail extensive none
IFD Idx	The internal interface index.	brief terse detail extensive none

Table 21: show chassis satellite extended-port Output Fields (continued)

Field Name	Field Description	Level of Output
PCID	The port's E-channel identifier (ECID), abbreviated as PCID.	brief terse detail extensive none
When	The date and time of the event.	detail extensive
Event	The event.	detail extensive
Action	The actions that resulted from the event.	detail extensive

Sample Output

show chassis satellite extended-port

```
user@aggregation-device> show chassis satellite extended-port
Legend for interface types:
   * -- Uplink interface
                                Rx             Tx             Admin/Op IFD
Name            State           Request State  Request State  State    Idx   PCID
et-100/0/2      AddComplete     None           Ready          Up/Dn    838   110
et-104/0/2      AddComplete     None           Ready          Up/Dn    813   110
et-107/0/23     AddComplete     None           Ready          Up/Up    544   194
ge-109/0/0      AddComplete     None           Ready          Up/Up    402   115
ge-109/0/1      AddComplete     None           Ready          Up/Dn    403   114
ge-109/0/10     AddComplete     None           Ready          Up/Dn    412   113
ge-109/0/11     AddComplete     None           Ready          Up/Dn    413   112
ge-109/0/12     AddComplete     None           Ready          Up/Dn    414   123
ge-109/0/13     AddComplete     None           Ready          Up/Dn    415   122
ge-109/0/14     AddComplete     None           Ready          Up/Dn    416   125
ge-109/0/15     AddComplete     None           Ready          Up/Dn    417   124
ge-109/0/16     AddComplete     None           Ready          Up/Dn    418   131
ge-109/0/17     AddComplete     None           Ready          Up/Dn    419   130
ge-109/0/18     AddComplete     None           Ready          Up/Dn    420   133
ge-109/0/19     AddComplete     None           Ready          Up/Dn    421   132
ge-109/0/2      AddComplete     None           Ready          Up/Dn    404   117
ge-109/0/20     AddComplete     None           Ready          Up/Dn    422   127
ge-109/0/21     AddComplete     None           Ready          Up/Dn    423   126
ge-109/0/22     AddComplete     None           Ready          Up/Dn    424   129
ge-109/0/23     AddComplete     None           Ready          Up/Dn    425   128
ge-109/0/24     AddComplete     None           Ready          Up/Dn    426   103
ge-109/0/25     AddComplete     None           Ready          Up/Dn    427   102
ge-109/0/26     AddComplete     None           Ready          Up/Dn    428   105
ge-109/0/27     AddComplete     None           Ready          Up/Dn    429   104
ge-109/0/28     AddComplete     None           Ready          Up/Dn    430   107
ge-109/0/29     AddComplete     None           Ready          Up/Dn    431   106
ge-109/0/3      AddComplete     None           Ready          Up/Dn    405   116
ge-109/0/30     AddComplete     None           Ready          Up/Dn    432   109
ge-109/0/31     AddComplete     None           Ready          Up/Dn    433   108
ge-109/0/32     AddComplete     None           Ready          Up/Dn    434   135
```

```
ge-109/0/33    AddComplete    None          Ready          Up/Dn    435    134
ge-109/0/34    AddComplete    None          Ready          Up/Dn    436    137
ge-109/0/35    AddComplete    None          Ready          Up/Dn    437    136
ge-109/0/36    AddComplete    None          Ready          Up/Dn    438    144
ge-109/0/37    AddComplete    None          Ready          Up/Dn    439    143
ge-109/0/38    AddComplete    None          Ready          Up/Dn    440    146
ge-109/0/39    AddComplete    None          Ready          Up/Dn    441    145
ge-109/0/4     AddComplete    None          Ready          Up/Dn    406    119
ge-109/0/40    AddComplete    None          Ready          Up/Dn    442    140
ge-109/0/41    AddComplete    None          Ready          Up/Dn    443    139
ge-109/0/42    AddComplete    None          Ready          Up/Dn    444    142
ge-109/0/43    AddComplete    None          Ready          Up/Dn    445    141
ge-109/0/44    AddComplete    None          Ready          Up/Dn    446    148
ge-109/0/45    AddComplete    None          Ready          Up/Dn    447    147
ge-109/0/46    AddComplete    None          Ready          Up/Dn    448    150
ge-109/0/47    AddComplete    None          Ready          Up/Dn    449    149
ge-109/0/5     AddComplete    None          Ready          Up/Dn    407    118
ge-109/0/6     AddComplete    None          Ready          Up/Dn    408    121
ge-109/0/7     AddComplete    None          Ready          Up/Dn    409    120
ge-109/0/8     AddComplete    None          Ready          Up/Dn    410    111
ge-109/0/9     AddComplete    None          Ready          Up/Dn    411    110
ge-110/0/0     AddComplete    None          Ready          Up/Up    728    115
ge-110/0/1     AddComplete    None          Ready          Up/Dn    729    114
```

show chassis satellite interface

Syntax

show chassis satellite interface
<*interface-name*>
[brief | detail | extensive]
<since *time*>

Release Information

Command introduced in Junos OS Release 14.2R3 for Junos Fusion Provider Edge.
Command introduced in Junos OS Release 16.1R1 for Junos Fusion Enterprise.
Command introduced in Junos OS Release 17.2R1 for Junos Fusion Data Center.

Description

Display the status of the cascade ports as well as the internal satellite interfaces in a Junos Fusion.

You might see **sd** interfaces in the output of this command. These are internal interfaces for the Junos Fusion.

Options

interface-name—Specify the name of the interface.

none—(Same as **brief**) Display aggregation device interface information.

brief | detail | extensive—(Optional) Display the specified level of output.

since *time*—(Optional) Display interface status information for the satellite devices that have been added to the Junos Fusion on or after a certain date or time, which is entered in the *YYYY-MM-DD.HH:MM:SS* format.

To display extended port status information for all satellite devices added since a specified date, enter the specific date as the time as the *time*. For instance, **2015-12-22**.

To display extended port status information for all satellite devices added since a specified time, enter the specific date and time as the *time*. For instance, **2015-12-22.11:01:00**.

Required Privilege Level

view

Related Documentation

- *Configuring or Expanding a Junos Fusion Enterprise*
- *Configuring Junos Fusion Provider Edge*

List of Sample Output

show chassis satellite interface on page 698

Output Fields

Table 22 on page 698 lists the output fields for the **show chassis satellite interface** command. Output fields are listed in the approximate order in which they appear.

Table 22: show chassis satellite interface Output Fields

Field Name	Field Description	Level of Output
Fields for Interface		
Interface	The interface name.	brief detail extensive none
State	The state of the interface.	brief detail extensive none
Type	The type of interface.	brief detail extensive none
Provisioned Addresses	The provisioned IP addresses for the Junos Fusion. This information is primarily useful for debugging purposes by expert users.	detail extensive
Operational Addresses	The operational IP addresses for the Junos Fusion. This information is primarily useful for debugging purposes by expert users.	detail extensive
When	The date and time of the event.	detail extensive
Event	The event.	detail extensive
Action	The actions that resulted from the event.	detail extensive

Sample Output

show chassis satellite interface

```
user@aggregation-device> show chassis satellite interface

Interface          State        Type
lo0                Up           Loopback

sd-101/0/0         Up           Satellite

sd-102/0/0         Up           Satellite

sd-103/0/0         Up           Satellite

sd-104/0/0         Up           Satellite
```

```
sd-105/0/0          Up            Satellite
sd-106/0/0          Up            Satellite
sd-107/0/0          Up            Satellite
sd-108/0/0          Up            Satellite
sd-109/0/0          Up            Satellite
sd-110/0/0          Up            Satellite
sd-111/0/0          Up            Satellite
sd-112/0/0          Up            Satellite
sd-113/0/0          Up            Satellite
sd-114/0/0          Up            Satellite
xe-0/0/1            Up            Cascade
xe-0/0/2            Up            Cascade
xe-0/0/3            Up            Cascade
xe-0/0/4            Up            Cascade
xe-0/0/5            Up            Cascade
xe-0/0/6            Up            Cascade
xe-0/0/7            Up            Cascade
xe-0/0/8            Up            Cascade
xe-0/0/9            Up            Cascade
xe-0/2/0            Up            Cascade
xe-0/2/1            Up            Cascade
xe-0/2/2            Up            Cascade
xe-0/2/3            Up            Cascade
xe-0/2/4            Up            Cascade
xe-0/2/5            Up            Cascade
xe-0/2/6            Up            Cascade
xe-0/2/7            Up            Cascade
xe-1/0/1            Up            Cascade
xe-1/0/2            Up            Cascade
xe-1/0/3            Up            Cascade
```

```
xe-1/2/1          Up          Cascade
xe-1/2/2          Up          Cascade
xe-1/2/3          Up          Cascade
xe-2/0/0          Up          Cascade
xe-2/0/1          Up          Cascade
xe-2/0/2          Up          Cascade
xe-2/0/3          Up          Cascade
xe-2/0/4          Up          Cascade
xe-2/0/5          Up          Cascade
xe-2/0/6          Up          Cascade
xe-2/0/7          Up          Cascade
xe-2/1/0          Up          Cascade
xe-2/1/1          Up          Cascade
xe-2/1/2          Up          Cascade
xe-2/1/3          Up          Cascade
xe-2/1/4          Up          Cascade
xe-2/1/5          Up          Cascade
xe-2/1/6          Up          Cascade
xe-2/1/7          Up          Cascade
xe-2/2/0          Up          Cascade
xe-2/2/1          Up          Cascade
xe-2/2/2          Up          Cascade
xe-2/2/3          Up          Cascade
xe-2/2/4          Up          Cascade
xe-2/2/5          Up          Cascade
xe-2/2/6          Up          Cascade
xe-2/2/7          Up          Cascade
xe-2/3/0          Up          Cascade
xe-2/3/3          Dn          Cascade
xe-2/3/4          Up          Cascade
xe-2/3/5          Up          Cascade
```

```
xe-2/3/6          Up          Cascade
xe-2/3/7          Up          Cascade
```

show chassis satellite neighbor

Syntax

show chassis satellite neighbor
[*interface-name*]
[brief | detail | extensive | terse]
<since *time*>

Release Information

Command introduced in Junos OS Release 14.2R3 for Junos Fusion Provider Edge.
Command introduced in Junos OS Release 16.1R1 for Junos Fusion Enterprise.
Command introduced in Junos OS Release 17.2R1 for Junos Fusion Data Center.

Description

Display the status of the satellite device to aggregation device links in a Junos Fusion.

Options

interface-name—Specify the name of the cascade port on the aggregation device.

none—(Same as **terse**) Display satellite device connection information.

brief | detail | extensive | terse—(Optional) Display the specified level of output.

since *time*—(Optional) Display satellite device connection information for the satellite devices that have been added to the Junos Fusion on or after a certain date or time, which is entered in the *YYYY-MM-DD.HH:MM:SS* format.

To display satellite device connection information for all satellite devices added since a specified date, enter the specific date as the time as the *time*. For instance, **2015-12-22**.

To display satellite device connection information for all satellite devices added since a specified time, enter the specific date and time as the *time*. For instance, **2015-12-22.11:01:00**.

Required Privilege Level

view

Related Documentation

- *Configuring or Expanding a Junos Fusion Enterprise*
- *Configuring Junos Fusion Provider Edge*

List of Sample Output

show chassis satellite neighbor on page 705

Output Fields

Table 23 on page 702 lists the output fields for the **show chassis satellite neighbor** command. Output fields are listed in the approximate order in which they appear.

Table 23: show chassis satellite neighbor Output Fields

Field Name	Field Description	Level of Output
Fields for Interface		

Table 23: show chassis satellite neighbor Output Fields (continued)

Field Name	Field Description	Level of Output
Interface	A cascade port interface on the aggregation device in the Junos Fusion. A cascade port interface on an aggregation device connects to a satellite device in a Junos Fusion.	brief terse detail extensive none
State	The state of the interface.	brief terse detail extensive none
Port Info	The uplink port interface on the satellite device. An uplink port interface on a satellite device connects the satellite device to an aggregation device in a Junos Fusion.	brief terse detail extensive none
System Name	The system name, or alias, of the satellite device. The satellite device's alias is configured using the **set chassis satellite-management fpc *slot-id*** alias ***alias*** statement.	brief terse detail extensive none
Model	The hardware model of the satellite device.	brief terse detail extensive none
SW Version	The version of satellite software running on the satellite device.	brief terse detail extensive none
Adjacency up-down transition count	The number of times that the adjacency has transitioned between up and down.	brief detail extensive
Last transition	The last transition of the adjacency state.	brief detail extensive
Device Serial Number	The serial number of the satellite device.	brief detail extensive
Chassis ID	The chassis ID of the satellite device. The chassis ID of the satellite device is the satellite's device's MAC address. The chassis ID is also specified as the system ID in some Junos Fusion configuration tasks.	brief detail extensive

Table 23: show chassis satellite neighbor Output Fields (continued)

Field Name	Field Description	Level of Output
Device Family Name	The device family name.	brief detail extensive
Version Sequence Number	The version sequence number.	brief detail extensive
System Description	A plain-text description of the hardware and software currently running on the satellite device.	brief detail extensive
Build date	The date and time that the satellite software was built.	brief detail extensive
Hello interval	The current hello interval configuration.	brief detail extensive
Satellite hello interval	The current satellite device hello interval configuration.	brief detail extensive
Local-end (Local assigned primary address)	The local-end cascade port IP address.	brief detail extensive
Remote-end (Local assigned primary address)	The remote-end uplink port IP address.	brief detail extensive
Cause (Adjacency Down History)	The cause of the last adjacency down event.	brief detail extensive
Timestamp (Adjacency Down History)	The date and time of the last adjacency down event.	brief detail extensive
Information (Adjacency Down History)	Information related to the last adjacency down event.	brief detail extensive
When	The date and time of the event.	detail extensive
Event	The event.	detail extensive

Table 23: show chassis satellite neighbor Output Fields (continued)

Field Name	Field Description	Level of Output
Action	The actions that resulted from the event.	detail extensive

Sample Output

show chassis satellite neighbor

```
user@aggregation-device> show chassis satellite neighbor
Interface   State      Port Info   System Name  Model           SW Version
xe-2/3/7    Init
xe-2/3/6    Init
xe-2/3/5    Init
xe-2/3/4    Init
xe-2/3/3    Dn
xe-2/3/0    Two-Way    xe-0/2/2        ex4300-29 EX4300-48T     0.1I20150224_182
7_dc-builder
xe-2/2/7    Two-Way    xe-0/2/2        ex4300-28 EX4300-48T     0.1I20150224_182
7_dc-builder
xe-2/2/6    Two-Way    xe-0/2/2        ex4300-27 EX4300-48T     0.1I20150224_182
7_dc-builder
xe-2/2/5    Two-Way    xe-0/2/2        ex4300-26 EX4300-48T     0.1I20150224_182
7_dc-builder
xe-2/2/4    Init
xe-2/2/3    Init
xe-2/2/2    Two-Way    xe-0/0/48:3 qfx5100-48s-06 QFX5100-48S-6Q 0.1I20150224_18
27_dc-builder
xe-2/2/1    Two-Way    xe-0/0/48:3 qfx5100-48s-05 QFX5100-48S-6Q 0.1I20150224_18
27_dc-builder
xe-2/2/0    Init
xe-2/1/7    Init
xe-2/1/6    Init
xe-2/1/5    Two-Way    xe-0/0/4:2  qfx5100-24q-09 QFX5100-24Q-2P 0.1I20150224_18
27_dc-builder
xe-2/1/4    Two-Way    xe-0/2/1        ex4300-31 EX4300-48T     0.1I20150224_182
7_dc-builder
xe-2/1/3    Two-Way    xe-0/2/1        ex4300-30 EX4300-48T     0.1I20150224_182
7_dc-builder
xe-2/1/2    Two-Way    xe-0/2/1        ex4300-29 EX4300-48T     0.1I20150224_182
7_dc-builder
xe-2/1/1    Two-Way    xe-0/2/1        ex4300-28 EX4300-48T     0.1I20150224_182
7_dc-builder
xe-2/1/0    Init
xe-2/0/7    Two-Way    xe-0/2/1        ex4300-26 EX4300-48T     0.1I20150224_182
7_dc-builder
xe-2/0/6    Init
xe-2/0/5    Init
xe-2/0/4    Init
xe-2/0/3    Init
xe-2/0/2    Two-Way    xe-0/0/48:2 qfx5100-48s-04 QFX5100-48S-6Q 0.1I20150224_18
27_dc-builder
xe-2/0/1    Two-Way    xe-0/0/48:2 qfx5100-48s-03 QFX5100-48S-6Q 0.1I20150224_18
27_dc-builder
xe-2/0/0    Init
xe-1/2/3    Two-Way    xe-0/0/0:0  qfx5100-24q-09 QFX5100-24Q-2P 0.1I20150224_18
27_dc-builder
```

```
xe-1/2/2    Two-Way    xe-0/2/0        ex4300-31 EX4300-48T     0.1I20150224_182
7_dc-builder
xe-1/2/1    Two-Way    xe-0/2/0        ex4300-30 EX4300-48T     0.1I20150224_182
7_dc-builder
xe-1/0/3    Two-Way    xe-0/2/0        ex4300-29 EX4300-48T     0.1I20150224_182
7_dc-builder
xe-1/0/2    Two-Way    xe-0/2/0        ex4300-28 EX4300-48T     0.1I20150224_182
7_dc-builder
xe-1/0/1    Two-Way    xe-0/2/0        ex4300-27 EX4300-48T     0.1I20150224_182
7_dc-builder
xe-0/2/7    Two-Way    xe-0/0/0:1  qfx5100-24q-09 QFX5100-24Q-2P 0.1I20150224_18
27_dc-builder
xe-0/2/6    Init
xe-0/2/5    Init
xe-0/2/4    Two-Way    xe-0/0/48:1 qfx5100-48s-05 QFX5100-48S-6Q 0.1I20150224_18
27_dc-builder
xe-0/2/3    Two-Way    xe-0/0/48:1 qfx5100-48s-04 QFX5100-48S-6Q 0.1I20150224_18
27_dc-builder
xe-0/2/2    Two-Way    xe-0/0/48:1 qfx5100-48s-03 QFX5100-48S-6Q 0.1I20150224_18
27_dc-builder
xe-0/2/1    Init
xe-0/2/0    Init
xe-0/0/9    Two-Way    xe-0/2/0        ex4300-26 EX4300-48T     0.1I20150224_182
7_dc-builder
xe-0/0/8    Two-Way    xe-0/2/0        ex4300-25 EX4300-48T     0.1I20150224_182
7_dc-builder
xe-0/0/7    Two-Way    xe-0/0/48:0 qfx5100-48s-07 QFX5100-48S-6Q 0.1I20150224_18
27_dc-builder
xe-0/0/6    Two-Way    xe-0/0/48:0 qfx5100-48s-06 QFX5100-48S-6Q 0.1I20150224_18
27_dc-builder
xe-0/0/5    Two-Way    xe-0/0/48:0 qfx5100-48s-05 QFX5100-48S-6Q 0.1I20150224_18
27_dc-builder
xe-0/0/4    Two-Way    xe-0/0/48:0 qfx5100-48s-04 QFX5100-48S-6Q 0.1I20150224_18
27_dc-builder
xe-0/0/3    Two-Way    xe-0/0/48:0 qfx5100-48s-03 QFX5100-48S-6Q 0.1I20150224_18
27_dc-builder
xe-0/0/2    Two-Way    xe-0/0/48:0 qfx5100-48s-02 QFX5100-48S-6Q 0.1I20150224_18
27_dc-builder
xe-0/0/1    Init
```

show chassis satellite redundancy-group

Syntax

show chassis satellite redundancy-group
[brief | detail | extensive | terse]
<since *time*>

Release Information

Command introduced in Junos OS Release 16.1R1 for Junos Fusion Enterprise.
Command introduced in Junos OS Release 17.2R1 for Junos Fusion Data Center.

Description

Display the status of the redundancy group in a Junos Fusion.

Redundancy groups are used in a Junos Fusion to configure, monitor, and maintain a topology using two aggregation devices.

Options

none—(Same as **terse** and **brief**) Display redundancy group information for the Junos Fusion.

brief | detail | extensive | terse—(Optional) Display the specified level of output.

since *time*—(Optional) Display redundancy group information on or after a certain date or time, in *YYYY-MM-DD.HH:MM:SS* format.

To display all output since a specified date, enter the specific date. For instance, enter **2015-12-22** as the *time*.

To display all output since a specified time, enter the specific date and time. For instance, to display all information on or after 11:01AM on December 22nd, 2015, enter **2015-12-22.11:01:00** as the *time*.

Required Privilege Level

view

Related Documentation

- *Configuring or Expanding a Junos Fusion Enterprise*

List of Sample Output

show chassis satellite redundancy-group on page 709

Output Fields

Table 24 on page 708 lists the output fields for the **show chassis satellite redundancy-groups** command. Output fields are listed in the approximate order in which they appear.

Table 24: show chassis satellite redundancy-groups Output Fields

Field Name	Field Description	Level of Output
Name	The name of the redundancy group. The redundancy group name is set using the **set chassis satellite-management redundancy-groups *redundancy-group-name*** statement.	none terse brief detail extensive
Cluster State	The cluster state.	none terse brief detail extensive
Peer Chassis ID	The chassis ID of the peer chassis. In a Junos Fusion using redundancy groups, the peer chassis ID is the chassis ID of the other aggregation device and is required to create an interchassis link (ICL). The chassis ID is set using the **set *redundancy-group-name* chassis-id *chassis-id-number*** statement.	none terse brief detail extensive
Peer Chassis SN	The serial number of the peer chassis. In a Junos Fusion using redundancy groups, the peer chassis serial number is the serial number of the other aggregation device.	none terse brief detail extensive
Device Count	The device count.	none terse brief detail extensive
When	The date and time of the event.	detail extensive

Table 24: show chassis satellite redundancy-groups Output Fields (continued)

Field Name	Field Description	Level of Output
Event	The event.	detail extensive
Action	The actions that resulted from the event.	detail extensive

Sample Output

show chassis satellite redundancy-group

```
user@aggregation-device> show chassis satellite redundancy-group

                Cluster             Peer          Peer              Device
Name            State               Chassis ID    Chassis SN        Count
gr1             Online              2             DC334             143/143/150
```

show chassis satellite redundancy-group devices

Syntax

show chassis satellite redundancy-group devices
[brief | detail | extensive | terse]
<history>

Release Information

Command introduced in Junos OS Release 16.1R1 for Junos Fusion Enterprise.
Command introduced in Junos OS Release 17.2R1 for Junos Fusion Data Center.

Description

Display the status of the devices in a redundancy group in a Junos Fusion.

Redundancy groups are used in a Junos Fusion to configure, monitor, and maintain a topology using two aggregation devices.

Options

none—(Same as **terse** and **brief**) Display redundancy group device information for the Junos Fusion.

brief | detail | extensive | terse—(Optional) Display the specified level of output.

history—(Optional) Display historical output.

Required Privilege Level

view

Related Documentation

- *Configuring or Expanding a Junos Fusion Enterprise*

List of Sample Output

show chassis satellite redundancy-group devices on page 711

Output Fields

Table 25 on page 710 lists the output fields for the **show chassis satellite redundancy-groups** command. Output fields are listed in the approximate order in which they appear.

Table 25: show chassis satellite redundancy-groups Output Fields

Field Name	Field Description	Level of Output
Cluster Name	The name of the redundancy group. The redundancy group name is set using the **set chassis satellite-management redundancy-groups** ***redundancy-group-name*** statement.	none terse brief detail extensive

Table 25: show chassis satellite redundancy-groups Output Fields (continued)

Field Name	Field Description	Level of Output
Slot ID	The FPC slot ID of the satellite device.	none terse brief detail extensive
Local State	The local state of the satellite device.	none terse brief detail extensive
Peer State	The peer state.	none terse brief detail extensive
When	The date and time of the event.	detail extensive
Event	The event.	detail extensive
Action	The actions that resulted from the event.	detail extensive

Sample Output

show chassis satellite redundancy-group devices

```
user@aggregation-device> show chassis satellite redundancy-group devices

Cluster                          Local           Peer
name            Slot-ID          State           State
gr1             100              online          online
gr1             101              online          online
gr1             102              online          online
gr1             103              not-provisioned online
```

```
gr1            104             not-provisioned online
gr1            105             not-provisioned online
gr1            106             not-provisioned online
gr1            107             not-provisioned online
gr1            108             not-provisioned online
gr1            109             not-provisioned online
```

show chassis satellite software

Syntax

show chassis satellite software
[brief | detail]

Release Information

Command introduced in Junos OS Release 14.2R3 for Junos Fusion Provider Edge.
Command introduced in Junos OS Release 16.1R1 for Junos Fusion Enterprise.
Command introduced in Junos OS Release 17.2R1 for Junos Fusion Data Center.

Description

Display information related to the satellite software in the Junos Fusion.

Options

none—(Same as **brief**) Display satellite device software information.

brief | detail —(Optional) Display the specified level of output.

Required Privilege Level

view

Related Documentation

- *Configuring or Expanding a Junos Fusion Enterprise*
- *Configuring Junos Fusion Provider Edge*

List of Sample Output

show chassis satellite software on page 714
show chassis satellite software detail on page 714

Output Fields

Table 26 on page 713 lists the output fields for the **show chassis satellite neighbor** command. Output fields are listed in the approximate order in which they appear.

Table 26: show chassis satellite software Output Fields

Field Name	Field Description	Level of Output
Fields for Interface		
Version	The versions of satellite software that are installed and associated with a software upgrade group.	brief none
Platforms	The hardware platform information.	brief none
Group	The name of the assigned satellite software group or groups, if assigned.	brief none
Software Package Version	The satellite software package version.	detail
Platform	The platform type.	detail
Host Version	The host version of software for the platform.	detail

Table 26: show chassis satellite software Output Fields (continued)

Field Name	Field Description	Level of Output
Current Groups	The name or names of the satellite software upgrade groups that are using the software package. This output only appears if the software package is associated with a satellite software upgrade group.	detail
Former Groups	The name or names of satellite software upgrade groups that were previously using the software package. This output only appears if the software package was previously associated with a satellite software upgrade group.	detail

Sample Output

show chassis satellite software

```
user@aggregation-device> show chassis satellite software
Version                         Platforms           Group
3.0R1.1                         i386 ppc            group0
```

Sample Output

show chassis satellite software detail

```
user@aggregation-device> show chassis satellite software detail
Software package version: 3.0R1.6
Platforms supported by package: i386 ppc arm arm563xx
  Platform      Host Version  Models Supported
  i386          3.0.3         QFX5100-24Q-2P
                              QFX5100-48C-6Q
                              QFX5100-48S-6Q
                              QFX5100-48T-6Q
                              QFX5100-96S-8Q
                              QFX5100-48SH-6Q
                              QFX5100-48TH-6Q
  ppc           1.1.2         EX4300-24P
                              EX4300-24T
                              EX4300-48P
                              EX4300-48T
                              EX4300-48T-BF
                              EX4300-48T-DC
                              EX4300-48T-DC-BF
  arm           1.0.0         EX2300-24P
                              EX2300-24T-DC
                              EX2300-C-12T
                              EX4300-C-12P
  arm563xx      1.0.0         EX3400-24P
                              EX3400-24T
                              EX3400-48T
                              EX3400-48P
Current Groups: group1
                group2
                group3
```

```
group4
group5
```

show chassis satellite statistics

Syntax

show chassis satellite statistics
<device-alias *device-alias*>
<fpc-slot *fpc-slot*>
<cluster *cluster-name*>

Release Information

Command introduced in Junos OS Release 14.2R3 for Junos Fusion Provider Edge.
Command introduced in Junos OS Release 16.1R1 for Junos Fusion Enterprise.
Command introduced in Junos OS Release 17.2R1 for Junos Fusion Data Center.

Description

Display statistics for satellite devices in a Junos Fusion.

Options

device-alias—Display output for the specified satellite device, which is identified by the device alias, only.

fpc-slot —Display output for the specified satellite device, which is identified by the FPC slot ID, only.

cluster-name—Display output for the satellite devices in the specified satellite device cluster only.

Required Privilege Level

view

Related Documentation

- *Configuring or Expanding a Junos Fusion Enterprise*
- *Configuring Junos Fusion Provider Edge*

List of Sample Output

show chassis satellite statistics on page 717
show chassis satellite statistics device-alias qfx5100-48s-02 on page 720
show chassis satellite statistics fpc-slot 101 on page 720

Output Fields

Table 27 on page 716 lists the output fields for the **show chassis satellite statistics** command. Output fields are listed in the approximate order in which they appear.

Table 27: show chassis satellite statistics Output Fields

Field Name	Field Description
Fields for Interface	
Serial Number	The serial number of the satellite device.
Slot-ID	The FPC slot ID of the satellite device.
CSP down transition count	The number of times that the Control and Status Protocol (CSP) session has gone down.

Table 27: show chassis satellite statistics Output Fields (continued)

Field Name	Field Description
Last transition (CSP down transition count)	The last time that the Control and Status Protocol (CSP) session transitioned.
Reachability down transition count	The number of times the satellite device has been in the reachability down state.
Reachability change transition count (Reachability down transition count)	The number of times that the satellite device's reachability state has transitioned.
S/W image update count	The number of times that the satellite software has been updated on the satellite device.
Extended Port add/delete/up/down request/response	The number of times an extended port—a network-facing port on the satellite device—has been added, deleted, placed in the up position, received a down request, or received a response.
Extended Port Params change request	The number of times that an extended port—a network-facing port on the satellite device—has had a change request.
Extended Port up/down operational state transition	The number of times that an extended port—a network-facing port on the satellite device—has had an operational state transition to up or down.
Rx sync complete	The number of times the receive synchronization state has been completed.
Uplink ready rx count	The number of times the uplink port—the port on the satellite device that connects to the aggregation device—has been placed in the ready-to-receive state.
Uplink ready tx count	The number of times the uplink port—the port on the satellite device that connects to the aggregation device—has been placed in the ready-to-transmit state.

Sample Output

show chassis satellite statistics

```
user@aggregation-device> show chassis satellite statistics
Serial Number: TA3714160468 Slot-ID: 101
   CSP down transition count: 0 Last transition: 05:23:56
   Reachability down transition count: 0
   Reachability change transition count: 4 Last transition: 05:23:16
   S/W image update count: 0
   Extended Port add/delete/up/down request/response: 7/0/7/2 7/0/7/2
   Extended Port Params change request: 0
   Extended Port up/down operational state transition: 7/0
   Rx sync complete: 1
   Uplink ready rx count: 4
   Uplink ready tx count: 4
Serial Number: TA3714160046 Slot-ID: 102
   CSP down transition count: 0 Last transition: 05:23:55
   Reachability down transition count: 0
   Reachability change transition count: 4 Last transition: 05:23:19
   S/W image update count: 0
   Extended Port add/delete/up/down request/response: 7/0/7/2 7/0/7/2
```

```
   Extended Port Params change request: 0
   Extended Port up/down operational state transition: 7/0
   Rx sync complete: 1
   Uplink ready rx count: 4
   Uplink ready tx count: 4
Serial Number: TA3714140404 Slot-ID: 103
   CSP down transition count: 0 Last transition: 05:23:57
   Reachability down transition count: 0
   Reachability change transition count: 4 Last transition: 05:23:14
   S/W image update count: 0
   Extended Port add/delete/up/down request/response: 6/0/5/3 6/0/5/3
   Extended Port Params change request: 0
   Extended Port up/down operational state transition: 5/0
   Rx sync complete: 1
   Uplink ready rx count: 4
   Uplink ready tx count: 4
Serial Number: TA3714141327 Slot-ID: 104
   CSP down transition count: 0 Last transition: 05:23:57
   Reachability down transition count: 0
   Reachability change transition count: 4 Last transition: 05:23:15
   S/W image update count: 0
   Extended Port add/delete/up/down request/response: 14/0/14/2 14/0/14/2
   Extended Port Params change request: 0
   Extended Port up/down operational state transition: 14/0
   Rx sync complete: 1
   Uplink ready rx count: 4
   Uplink ready tx count: 4
Serial Number: TA3714140200 Slot-ID: 105
   CSP down transition count: 0 Last transition: 05:23:59
   Reachability down transition count: 0
   Reachability change transition count: 4 Last transition: 05:23:15
   S/W image update count: 0
   Extended Port add/delete/up/down request/response: 18/0/18/2 18/0/18/2
   Extended Port Params change request: 6
   Extended Port up/down operational state transition: 18/0
   Rx sync complete: 1
   Uplink ready rx count: 4
   Uplink ready tx count: 4
Serial Number: TA3714140904 Slot-ID: 106
   CSP down transition count: 0 Last transition: 05:23:57
   Reachability down transition count: 0
   Reachability change transition count: 4 Last transition: 05:23:16
   S/W image update count: 0
   Extended Port add/delete/up/down request/response: 17/0/16/3 17/0/16/3
   Extended Port Params change request: 2
   Extended Port up/down operational state transition: 16/0
   Rx sync complete: 1
   Uplink ready rx count: 4
   Uplink ready tx count: 4
Serial Number: PE3714040197 Slot-ID: 107
   CSP down transition count: 0 Last transition: 05:24:32
   Reachability down transition count: 0
   Reachability change transition count: 4 Last transition: 05:23:18
   S/W image update count: 0
   Extended Port add/delete/up/down request/response: 52/0/7/50 52/0/7/50
   Extended Port Params change request: 0
   Extended Port up/down operational state transition: 7/1
   Rx sync complete: 1
   Uplink ready rx count: 4
   Uplink ready tx count: 4
Serial Number: PE3714080398 Slot-ID: 108
```



```
   CSP down transition count: 0 Last transition: 05:24:32
   Reachability down transition count: 0
   Reachability change transition count: 4 Last transition: 05:23:18
   S/W image update count: 0
   Extended Port add/delete/up/down request/response: 52/0/15/40 52/0/15/40
   Extended Port Params change request: 0
   Extended Port up/down operational state transition: 15/0
   Rx sync complete: 1
   Uplink ready rx count: 4
   Uplink ready tx count: 4
Serial Number: PE3714080103 Slot-ID: 109
   CSP down transition count: 0 Last transition: 05:23:22
   Reachability down transition count: 0
   Reachability change transition count: 3 Last transition: 05:23:19
   S/W image update count: 0
   Extended Port add/delete/up/down request/response: 51/0/14/37 51/0/14/37
   Extended Port Params change request: 51
   Extended Port up/down operational state transition: 14/0
   Rx sync complete: 1
   Uplink ready rx count: 3
   Uplink ready tx count: 3
Serial Number: PE3714090246 Slot-ID: 110
   CSP down transition count: 0 Last transition: 05:23:22
   Reachability down transition count: 0
   Reachability change transition count: 3 Last transition: 05:23:19
   S/W image update count: 0
   Extended Port add/delete/up/down request/response: 51/0/14/37 51/0/14/37
   Extended Port Params change request: 42
   Extended Port up/down operational state transition: 14/0
   Rx sync complete: 1
   Uplink ready rx count: 3
   Uplink ready tx count: 3
Serial Number: PE3714080417 Slot-ID: 111
   CSP down transition count: 0 Last transition: 05:23:22
   Reachability down transition count: 0
   Reachability change transition count: 3 Last transition: 05:23:19
   S/W image update count: 0
   Extended Port add/delete/up/down request/response: 51/0/13/38 51/0/13/38
   Extended Port Params change request: 51
   Extended Port up/down operational state transition: 13/0
   Rx sync complete: 1
   Uplink ready rx count: 3
   Uplink ready tx count: 3
Serial Number: PE3714080018 Slot-ID: 112
   CSP down transition count: 0 Last transition: 05:23:22
   Reachability down transition count: 0
   Reachability change transition count: 2 Last transition: 05:23:18
   S/W image update count: 0
   Extended Port add/delete/up/down request/response: 51/0/12/39 51/0/12/39
   Extended Port Params change request: 51
   Extended Port up/down operational state transition: 12/0
   Rx sync complete: 1
   Uplink ready rx count: 2
   Uplink ready tx count: 2
Serial Number: PE3714080030 Slot-ID: 113
   CSP down transition count: 0 Last transition: 05:23:22
   Reachability down transition count: 0
   Reachability change transition count: 3 Last transition: 05:23:18
   S/W image update count: 0
   Extended Port add/delete/up/down request/response: 51/0/13/38 51/0/13/38
   Extended Port Params change request: 51
```

```
   Extended Port up/down operational state transition: 13/0
   Rx sync complete: 1
   Uplink ready rx count: 3
   Uplink ready tx count: 3
Serial Number: TB3714070145 Slot-ID: 114
   CSP down transition count: 0 Last transition: 05:23:58
   Reachability down transition count: 0
   Reachability change transition count: 4 Last transition: 05:23:15
   S/W image update count: 0
   Extended Port add/delete/up/down request/response: 17/0/13/7 17/0/13/7
   Extended Port Params change request: 0
   Extended Port up/down operational state transition: 13/0
   Rx sync complete: 1
   Uplink ready rx count: 4
   Uplink ready tx count: 4
```

Sample Output

show chassis satellite statistics device-alias qfx5100-48s-02

```
user@aggregation-device> show chassis satellite statistics device-alias qfx5100-48s-02
Serial Number: TA3714160468 Slot-ID: 101
   CSP down transition count: 0 Last transition: 05:52:44
   Reachability down transition count: 0
   Reachability change transition count: 4 Last transition: 05:52:04
   S/W image update count: 0
   Extended Port add/delete/up/down request/response: 7/0/7/2 7/0/7/2
   Extended Port Params change request: 0
   Extended Port up/down operational state transition: 7/0
   Rx sync complete: 1
   Uplink ready rx count: 4
   Uplink ready tx count: 4
```

Sample Output

show chassis satellite statistics fpc-slot 101

```
user@aggregation-device> show chassis satellite statistics fpc-slot 101
Serial Number: TA3714160468 Slot-ID: 101
   CSP down transition count: 0 Last transition: 05:52:44
   Reachability down transition count: 0
   Reachability change transition count: 4 Last transition: 05:52:04
   S/W image update count: 0
   Extended Port add/delete/up/down request/response: 7/0/7/2 7/0/7/2
   Extended Port Params change request: 0
   Extended Port up/down operational state transition: 7/0
   Rx sync complete: 1
   Uplink ready rx count: 4
   Uplink ready tx count: 4
```

show chassis satellite unprovision

Syntax

show chassis satellite unprovision
[brief | detail | extensive]
[cluster *cluster-name*]
<since *time*>

Release Information

Command introduced in Junos OS Release 14.2R3 for Junos Fusion Provider Edge.
Command introduced in Junos OS Release 16.1R1 for Junos Fusion Enterprise.
Command introduced in Junos OS Release 17.2R1 for Junos Fusion Data Center.

Description

Display information about unprovisioned satellite devices in a Junos Fusion.

An unprovisioned satellite device in a Junos Fusion is a satellite device that is recognized by the aggregation device, but is not participating in a Junos Fusion.

No output appears when this command is entered when a Junos Fusion contains no unprovisioned satellite devices.

This command is helpful in identifying satellite devices that are not participating in a Junos Fusion due to configuration issues. Notably, a satellite device that has not been associated with an FPC ID in a Junos Fusion becomes an unprovisioned satellite device. See *Configuring Junos Fusion Provider Edge* or *Configuring or Expanding a Junos Fusion Enterprise* for information on associating an FPC ID with a Junos Fusion.

Options

none—(Same as **brief**) Display unprovisioned satellite device information.

brief | detail | extensive—(Optional) Display the specified level of output.

cluster *cluster-name*—(Optional) Display unprovisioned satellite device information for the specified satellite device cluster only.

since *time*—(Optional) Display unprovisioned satellite device information for the satellite devices that have been unprovisioned from a Junos Fusion on or after a certain date or time, which is entered in the *YYYY-MM-DD.HH:MM:SS* format.

To display unprovisioned satellite device information for all satellite devices unprovisioned since a specified date, enter the specific date as the time as the *time*. For instance, **2015-12-22**.

To display unprovisioned satellite device information for all satellite devices added since a specified time, enter the specific date and time as the *time*. For instance, **2015-12-22.11:01:00**.

Required Privilege Level

view

Related Documentation

- *Configuring or Expanding a Junos Fusion Enterprise*

- *Configuring Junos Fusion Provider Edge*

List of Sample Output show chassis satellite unprovision on page 723
show chassis satellite unprovision detail on page 724

Output Fields Table 28 on page 722 lists the output fields for the **show chassis satellite unprovision** command. Output fields are listed in the approximate order in which they appear.

Table 28: show chassis satellite unprovision Output Fields

Field Name	Field Description	Level of Output
System-Id	The MAC address of the satellite device.	brief extensive none
Serial-Number	The serial number of the satellite device.	brief extensive none
Device State	The device state of the unprovisioned satellite device.	brief extensive none
Cascade Ports	The cascade ports on the aggregation device that are connected to the satellite device.	brief extensive none
Port State	The port state of the cascade port.	brief extensive none
Operational State	The operational state of the satellite device.	detail
Product Model	The product model of the satellite device.	detail
Product Family	The product family of the satellite device.	detail
Serial number	The serial number of the satellite device.	detail
System id	The MAC address of the satellite device.	detail
Software package version	The satellite software package version running on the satellite device.	detail
Host software version	The host software version.	detail
Fields for Cascade interfaces		
Interface Name	The interface name of the cascade port on the aggregation device.	detail
State	The state of the cascade port.	detail

Table 28: show chassis satellite unprovision Output Fields (continued)

Field Name	Field Description	Level of Output
Uplink Interface	The uplink interface name. The uplink interface is the interface on the satellite device that connects to the aggregation device.	detail
Adjacency State	The adjacency state of the uplink interface to cascade port link.	detail
Last transition	The amount of time that has passed since the last link transition.	detail
Adjacency down count	The number of times that the uplink interface to cascade port link has gone into the adjacency down count.	detail
Rx Packet	The number of received packets.	detail
Last received packet	The amount of time that has passed since the last received packet.	detail
Peer adjacency information	The amount of time that the adjacency has been active.	detail
Last down cause	The cause of the last time the adjacency went down.	detail
SDPD restart detected	The number of times that the SDPD has restarted.	detail
Fields for process information		
Process Name	The name of the process.	detail
PID	The PID of the process.	detail
State	The current state of the process.	detail
Number of restart detected	The number of times that the process has restarted.	detail
Uptime	The amount of time that the process has been active.	detail
When	The date and time of the event.	extensive
Event	The event.	extensive
Action	The actions that resulted from the event.	extensive

Sample Output

show chassis satellite unprovision

```
user@aggregation-device> show chassis satellite unprovision
                                        Device          Cascade     Port
System-Id          Serial-Number        State           Ports       State
```

```
AA:BB:CC:aa:bb:cc   TABCDE111111      Present         xe-0/0/1   present
                                                      xe-0/1/2   present
AA:BB:CC:aa:bb:zz   PABCDE111111      Present         xe-0/0/2   present
                                                      xe-0/3/2   present
```

Sample Output

show chassis satellite unprovision detail

```
user@aggregation-device> show chassis satellite unprovision detail
Operational State: Present
Product Model: QFX5100-48S-6Q
Product Family: i386
Serial number: TABCDE111111
System id: AA:BB:CC:aa:bb:cc
Software package version: 3.0R1
Host software version: 0.2.3
Cascade interfaces:
    Interface Name: xe-0/0/1 State: present
        Uplink Interface: xe-0/0/25
        Adjacency state: Two-Way
        Last transition: 3d 22:06:55
        Adjacency down count: 0
        Rx Packet: 33875 Last received packet: 00:00:09
        Peer adjacency information: 3d 22:06:55
            Adjacency down count: 3
            Last down cause: TTL is 0
            SDPD restart detected: 3
    Interface Name: xe-0/1/2 State: present
        Uplink Interface: xe-0/0/24
        Adjacency state: Two-Way
        Last transition: 3d 22:06:58
        Adjacency down count: 0
        Rx Packet: 33875 Last received packet: 00:00:09
        Peer adjacency information: 3d 22:06:58
            Adjacency down count: 5
            Last down cause: TTL is 0
            SDPD restart detected: 3
Process information:
    Process Name: Provisioning PID: 2488 State: Running
        Number of restart detected: 0
        Uptime: 3d 22:06:58
    Process Name: PFE PID: 2631 State: Running
        Number of restart detected: 0
        Uptime: 3d 22:06:58
Operational State: Present
Product Model: EX4300-48T
Product Family: ppc
Serial number: PABCDE111111
System id: AA:BB:CC:aa:bb:zz
Software package version: 3.0R1
Host software version: 0.2.4
Cascade interfaces:
    Interface Name: xe-0/0/2 State: present
        Uplink Interface: xe-0/2/1
        Adjacency state: Two-Way
        Last transition: 3d 22:06:56
        Adjacency down count: 0
        Rx Packet: 33876 Last received packet: 00:00:05
        Peer adjacency information: 3d 22:06:56
            Adjacency down count: 1
```

```
            Last down cause: TTL is 0
            SDPD restart detected: 2
    Interface Name: xe-0/3/2 State: present
        Uplink Interface: xe-0/2/0
        Adjacency state: Two-Way
        Last transition: 3d 22:06:57
        Adjacency down count: 0
        Rx Packet: 33876 Last received packet: 00:00:05
        Peer adjacency information: 3d 22:06:57
            Adjacency down count: 3
            Last down cause: TTL is 0
            SDPD restart detected: 2
Process information:
    Process Name: Provisioning PID: 1603 State: Running
        Number of restart detected: 0
        Uptime: 3d 22:06:57
    Process Name: PFE PID: 1615 State: Running
        Number of restart detected: 0
        Uptime: 3d 22:06:57
```

show chassis satellite upgrade-group

Syntax

show chassis satellite upgrade-group
<upgrade-group-name>
[brief | detail | extensive | terse]

Release Information

Command introduced in Junos OS Release 14.2R3 for Junos Fusion Provider Edge.
Command introduced in Junos OS Release 16.1R1 for Junos Fusion Enterprise.
Command introduced in Junos OS Release 17.2R1 for Junos Fusion Data Center.

Description

Display information about the satellite software upgrade groups for the Junos Fusion.

A satellite software upgrade group is a group of satellite devices that are updated at the same time to the same version of the satellite software. One Junos Fusion can contain multiple software upgrade groups, and multiple software upgrade groups should be configured in most Junos Fusions to avoid network downtimes during satellite software installations.

A satellite software upgrade group that contains all satellite devices in a satellite device cluster is automatically created when a satellite device cluster is configured. The software upgrade group name for these automatically created software upgrade groups is the cluster name.

Options

none—(Same as **brief** and **terse**) Display satellite software upgrade group information for all satellite software upgrade groups.

brief | detail | extensive | terse—(Optional) Display the specified level of output.

upgrade-group-name—Display satellite software upgrade group information for the specified satellite software upgrade group only.

The satellite software upgrade group name is set using the **set chassis satellite-management upgrade-groups *upgrade-group-name*** statement for standalone satellite devices and is the cluster name for satellite device clusters.

Required Privilege Level

view

Related Documentation

- *Configuring or Expanding a Junos Fusion Enterprise*
- *Configuring Junos Fusion Provider Edge*

List of Sample Output

show chassis satellite upgrade-group on page 728
show chassis satellite upgrade-group detail on page 728

Output Fields

Table 29 on page 727 lists the output fields for the **show chassis satellite upgrade-group** command. Output fields are listed in the approximate order in which they appear.

Table 29: show chassis satellite upgrade-group Output Fields

Field Name	Field Description	Level of Output
Fields for Interface		
Group	The satellite software upgrade group name. The satellite software upgrade group name is the name of the satellite device cluster when used with a satellite device cluster. A satellite software upgrade group with the name of the satellite device cluster is created automatically when a satellite device cluster is configured. The satellite software upgrade group name is set using the **set chassis satellite-management upgrade-groups *upgrade-group-name*** statement for standalone satellite devices.	brief terse extensive none
Sw-Version	The version of satellite software associated with the satellite software upgrade group.	brief terse extensive none
Group State	The state of the satellite software upgrade group.	brief terse extensive none
Slot	The FPC slot identification number of the satellite device that is a member of the satellite software upgrade group.	brief terse detail extensive none
Device State	The state of the satellite software for the specified member of the satellite software upgrade group. The **version-in-sync** output appears when the satellite device is running the satellite software version that is associated with the satellite software upgrade group.	brief terse detail extensive none
Software upgrade group	The name of the satellite software upgrade group.	detail
Software package version	The satellite software package associated with the satellite software upgrade group.	detail
Previous software package version	The satellite software package that was previously associated with the satellite software upgrade group. This output only appears if the satellite software upgrade group was previously associated with another version of satellite software.	detail

Sample Output

show chassis satellite upgrade-group

```
user@aggregation-device> show chassis satellite upgrade-group
                                                Group              Device
Group          Sw-Version                       State      Slot    State
__ungrouped__
ex4300         3.0R1.0                          in-sync    107     version-in-sync

                                                           108     version-in-sync

                                                           109     version-in-sync

                                                           110     version-in-sync

                                                           111     version-in-sync

                                                           112     version-in-sync

                                                           113     version-in-sync
qfx            3.0R1.0                          in-sync    102     version-in-sync

                                                           103     version-in-sync

                                                           104     version-in-sync

                                                           105     version-in-sync

                                                           106     version-in-sync

                                                           114     version-in-sync
```

Sample Output

show chassis satellite upgrade-group detail

```
user@aggregation-device> show chassis satellite upgrade-group detail
Software upgrade group: ex4300
Software package version: 3.0R1.0
Previous software package version: 3.0R1.1
  Slot    Device State
  107     version-in-sync
  108     version-in-sync
  109     version-in-sync
  110     version-in-sync
  111     version-in-sync
  112     version-in-sync
  113     version-in-sync

Software upgrade group: qfx
Software package version: 3.0R1.0
  Slot    Device State
  102     version-in-sync
  103     version-in-sync
  104     version-in-sync
  105     version-in-sync
  106     version-in-sync
  114     version-in-sync
```

show chassis temperature-thresholds

List of Syntax

Syntax on page 730
Syntax (TX Matrix Routers) on page 730
Syntax (TX Matrix Plus Routers) on page 730
Syntax (MX Series Routers) on page 730
Syntax (MX104, MX204, MX2010, MX2020, MX10003, MX10008, and MX2008 Universal Routing Platforms) on page 730
Syntax (QFX Series) on page 730
Syntax (PTX Series) on page 730
Syntax (EX9251, EX9253 Switches) on page 730

Syntax

show chassis temperature-thresholds

Syntax (TX Matrix Routers)

show chassis temperature-thresholds
<lcc *number* | scc>

Syntax (TX Matrix Plus Routers)

show chassis temperature-thresholds
<lcc *number* | sfc *number*>

Syntax (MX Series Routers)

show chassis temperature-thresholds
<all-members>
<local>
<member *member-id*>
<satellite [slot-id *slot-ID* |device-alias *alias-name*]>

Syntax (MX104, MX204, MX2010, MX2020, MX10003, MX10008, and MX2008 Universal Routing Platforms)

show chassis temperature-thresholds

Syntax (QFX Series)

show chassis temperature-thresholds
<interconnect-device *name*>
<node-device *name*>

Syntax (PTX Series)

show chassis temperature-thresholds

Syntax (EX9251, EX9253 Switches)

show chassis temperature-thresholds

Release Information

Command introduced in Junos OS Release 8.0.
Command introduced in Junos OS Release 9.0 for EX Series switches.
sfc command introduced in Junos OS Release 9.6 for the TX Matrix Plus router.
Command introduced in Junos OS Release 11.1 for QFX Series.
Command introduced in Junos OS Release 12.1 for T4000 Core Routers.

Command introduced in Junos OS Release 12.1X48 for PTX Series Packet Transport Routers.
Command introduced in Junos OS Release 12.3 for MX2010 and MX2020 Universal Routing Platforms.
Command introduced in Junos OS Release 13.2 for MX104 Universal Routing Platforms.
satellite option introduced in Junos OS Release 14.2R3.
Command introduced in Junos OS Release 17.2 for MX2008 Universal Routing Platforms.
Command introduced in Junos OS Release 17.2 for PTX10008 Routers.
Command introduced in Junos OS Release 17.3 for MX10003 Universal Routing Platforms.
Command introduced in Junos OS Release 17.3 for MX150 Router Appliance.
Command introduced in Junos OS Release 17.4 for MX204 Universal Routing Platforms.
Command introduced in Junos OS Release 18.1R1 for EX9251 switches.
Command introduced in Junos OS Release 18.2 for EX9253 Switches.
Command introduced in Junos OS Release 18.2R1 for MX10008 Routers.

Description Display chassis temperature threshold settings, in degrees Celsius.

Options **none**—Display the temperature threshold details.

all-members—(MX Series routers only) (Optional) Display the chassis temperature threshold settings of all member routers in the Virtual Chassis configuration.

interconnect-device *name*—(QFabric systems only) (Optional) Display the chassis temperature threshold settings of the Interconnect device.

lcc *number*—(TX Matrix and TX Matrix Plus routers only) (Optional) On a TX Matrix router, display the temperature threshold details of a specified T640 router (line-card chassis) that is connected to a TX Matrix router. On a TX Matrix Plus router, display the temperature threshold details of a specified router (line-card chassis) that is connected to a TX Matrix Plus router.

Replace *number* with the following values depending on the LCC configuration:

- 0 through 3, when T640 routers are connected to a TX Matrix router in a routing matrix.
- 0 through 3, when T1600 routers are connected to a TX Matrix Plus router in a routing matrix.
- 0 through 7, when T1600 routers are connected to a TX Matrix Plus router with 3D SIBs in a routing matrix.
- 0, 2, 4, or 6, when T4000 routers are connected to a TX Matrix Plus router with 3D SIBs in a routing matrix.

local—(MX Series routers only) (Optional) Display the chassis temperature threshold settings of the local Virtual Chassis member.

member *member-id*—(MX Series routers only) (Optional) Display the chassis temperature threshold settings of the specified member of the Virtual Chassis configuration. Replace *member-id* with a value of 0 or 1.

node-device ***name***—(QFabric systems only) (Optional) Display the chassis temperature threshold settings of the Node device.

satellite [slot-id ***slot-ID*** **| device-alias** ***alias-name*****]**—(Junos Fusion only) (Optional) Display the chassis temperature threshold settings for the specified satellite device or devices in a Junos Fusion, or for all satellite devices if no satellite devices are specified.

scc—(TX Matrix routers only) (Optional) Display the temperature threshold details of the TX Matrix router (switch-card chassis).

sfc ***number***—(TX Matrix Plus routers only) (Optional) On TX Matrix Plus routers, display the temperature threshold details of the TX Matrix Plus router, which is the switch-fabric chassis. Replace *number* with 0.

Required Privilege Level

view

List of Sample Output

Output Fields

Table 30 on page 733 lists the output fields for the **show chassis temperature-thresholds** command. Output fields are listed in the approximate order in which they appear.

Table 30: show chassis temperature-thresholds Output Fields

Field name	Field Description
Item	Chassis component. If per FRU per slot thresholds are configured, the components about which information is displayed include the chassis, the Routing Engines, FPCs, and FEBs. If per FRU per slot thresholds are not configured, the components about which information is displayed include the chassis and the Routing Engines.
Fan speed	NOTE: On the QFX3500 switch and QFX3600 switch, there are four fan speeds: **low**, **medium-low**, **medium-high**, and **high**. The fan speed changes at the threshold when going from a low speed to a higher speed. When the fan speed changes from a higher speed to a lower speed, the temperature changes two degrees below the threshold. Temperature threshold settings, in degrees Celsius, for the fans to operate at normal and high speeds. • Normal—The fans operate at normal speed if the component is at or below this temperature and all the fans are present and functioning normally. NOTE: On a TX Matrix Plus router with 3D SIBs, the threshold temperature at the XF junction is set to 70ºC for **Normal** fan speed, which is less than or equal to 4800 RPM. • High—The fans operate at high speed if the component has exceeded this temperature or a fan has failed or is missing. NOTE: On a TX Matrix Plus router with 3D SIBs, the threshold temperature at the XF junction is set to 75ºC for **High** fan speed, which is greater than or equal to 5000 RPM. NOTE: For MX480 Routers, there are three fan speeds: Low, Medium, and High. An alarm is not triggered until the temperature exceeds the threshold settings for a yellow alarm or a red alarm.
Yellow alarm	Temperature threshold settings, in degrees Celsius, that trigger a yellow alarm. • Normal—The temperature that must be exceeded on the component to trigger a yellow alarm when the fans are running at full speed. • Bad fan—The temperature that must be exceeded on the component to trigger a yellow alarm when one or more fans have failed or are missing.
Red alarm	Temperature threshold settings, in degrees Celsius, that trigger a red alarm. • Normal—The temperature that must be exceeded on the component to trigger a red alarm when the fans are running at full speed. • Bad fan—The temperature that must be exceeded on the component to trigger a red alarm when one or more fans have failed or are missing.
Fire Shutdown	(T4000 routers, TX Matrix Plus router with 3D SIBs, and PTX Series Packet Transport Routers only)—Temperature threshold settings, in degrees Celsius, for the network device to shut down.

Sample Output

show chassis temperature-thresholds

```
user@host> show chassis temperature-thresholds

                                    Fan speed        Yellow alarm        Red alarm
                                   (degrees C)        (degrees C)       (degrees C)
```

```
Item                     Normal   High    Normal   Bad fan    Normal   Bad fan
Chassis default              48     54        65        55        75        65
Routing Engine 0             70     80        95        95       110       110
Routing Engine 1             70     80        95        95       110       110
FPC 0                        55     60        75        65        90        80
FPC 1                        55     60        75        65        90        80
FPC 2                        55     60        75        65        90        80
FPC 3                        55     60        75        65        90        80
FPC 4                        55     60        75        65        90        80
FPC 5                        55     60        75        65        90        80
FPC 6                        55     60        75        65        90        80
FPC 7                        55     60        75        65        90        80
FPC 8                        55     60        75        65        90        80
FPC 9                        55     60        75        65        90        80
FPC 10                       55     60        75        65        90        80
FPC 11                       55     60        75        65        90        80
```

show chassis temperature-thresholds (MX150)

```
user@host> show chassis temperature-thresholds
Fan speed      Yellow alarm      Red alarm      Fire Shutdown
                         (degrees C)      (degrees C)     (degrees C)
(degrees C)
Item                     Normal  High   Normal  Bad fan   Normal  Bad fan
Normal
FPC 0 Sensor 1               43    65       68       68       70       70
72
FPC 0 Sensor 2               43    65       68       68       70       70
72
FPC 0 Coretemp               78    94      100      100      105      105
110
```

show chassis temperature-thresholds (MX104 Router)

```
user@host> show chassis temperature-thresholds
       Fan speed      Yellow alarm      Red alarm      Fire Shutdown
                         (degrees C)      (degrees C)     (degrees C)
(degrees C)
Item                     Normal  High   Normal  Bad fan   Normal  Bad fan
Normal
Chassis default              48    54       65       55       75       65
100
Routing Engine 0             55    80       95       95      105      100
108
```

show chassis temperature-thresholds (MX240, MX480, MX960 Routers with Application Services Modular Line Card)

```
user@host> show chassis temperature-thresholds
Fan speed      Yellow alarm      Red alarm      Fire Shutdown
                         (degrees C)      (degrees C)     (degrees C)
(degrees C)
Item                     Normal  High   Normal  Bad fan   Normal  Bad fan
Normal
Chassis default              48    54       65       55       75       65
100
Routing Engine 0             70    80       95       95      110      110
112
Routing Engine 1             70    80       95       95      110      110
112
```

```
FPC 0                        55    60       75       65       90       80
95
FPC 1                        55    60       75       65       90       80
95
FPC 2                        55    60       75       65       90       80
95
FPC 4                        55    60       75       65       90       80
95
FPC 5                        55    60       75       65       90       80
95
```

show chassis temperature-thresholds (MX480 Router with MPC4E)

```
user@ host> show chassis temperature-thresholds
       Fan speed      Yellow alarm      Red alarm      Fire Shutdown
                          (degrees C)      (degrees C)     (degrees C)
(degrees C)
Item                     Normal  High   Normal  Bad fan   Normal  Bad fan
Normal
Chassis default              48    54       65       55       75       65
100
Routing Engine 0             70    80       95       95      110      110
112
Routing Engine 1             70    80       95       95      110      110
112
FPC 2                        55    60       75       65       95       80
100
FPC 3                        55    60       75       65       95       80
100
FPC 4                        55    60       75       65       90       80
95
```

show chassis temperature-thresholds (MX2010 Router)

```
user@host> show chassis temperature-thresholds
                  Fan speed       Yellow alarm      Red alarm     Fire Shutdown
                  (degrees C)     (degrees C)      (degrees C)    (degrees C)
Item                Normal  High   Normal  Bad fan   Normal  Bad fan  Normal
Routing Engine 0      70    80       95       95      110      110      112
Routing Engine 1      70    80       95       95      110      110      112
CB 0 IntakeA-Zone0    60    65       78       75       85       80       95
CB 0 IntakeB-Zone1    60    65       78       75       85       80       95
CB 0 IntakeC-Zone0    60    65       78       75       85       80       95
CB 0 ExhaustA-Zone0   60    65       78       75       85       80       95
CB 0 ExhaustB-Zone1   60    65       78       75       85       80       95
CB 0 TCBC-Zone0       60    65       78       75       85       80       95
CB 1 IntakeA-Zone0    60    65       78       75       85       80       95
CB 1 IntakeB-Zone1    60    65       78       75       85       80       95
CB 1 IntakeC-Zone0    60    65       78       75       85       80       95
CB 1 ExhaustA-Zone0   60    65       78       75       85       80       95
CB 1 ExhaustB-Zone1   60    65       78       75       85       80       95
CB 1 TCBC-Zone0       60    65       78       75       85       80       95
SPMB 0 Intake         56    62       75       63       83       76       95
SPMB 1 Intake         56    62       75       63       83       76       95
SFB 0 Intake-Zone0    56    62       75       63       82       70       87
SFB 0 Exhaust-Zone1   56    62       75       63       82       70       87
SFB 0 IntakeA-Zone0   56    62       75       63       82       70       87
SFB 0 IntakeB-Zone1   56    62       75       63       82       70       87
SFB 0 Exhaust-Zone0   56    62       75       63       82       70       87
SFB 0 SFB-XF2-Zone1   70    80       90       90      107      107      115
```

SFB	0	SFB-XF1-Zone0	70	80	90	90	107	107	115
SFB	0	SFB-XF0-Zone0	70	80	90	90	107	107	115
SFB	1	Intake-Zone0	56	62	75	63	82	70	87
SFB	1	Exhaust-Zone1	56	62	75	63	82	70	87
SFB	1	IntakeA-Zone0	56	62	75	63	82	70	87
SFB	1	IntakeB-Zone1	56	62	75	63	82	70	87
SFB	1	Exhaust-Zone0	56	62	75	63	82	70	87
SFB	1	SFB-XF2-Zone1	70	80	90	90	107	107	115
SFB	1	SFB-XF1-Zone0	70	80	90	90	107	107	115
SFB	1	SFB-XF0-Zone0	70	80	90	90	107	107	115
SFB	2	Intake-Zone0	56	62	75	63	82	70	87
SFB	2	Exhaust-Zone1	56	62	75	63	82	70	87
SFB	2	IntakeA-Zone0	56	62	75	63	82	70	87
SFB	2	IntakeB-Zone1	56	62	75	63	82	70	87
SFB	2	Exhaust-Zone0	56	62	75	63	82	70	87
SFB	2	SFB-XF2-Zone1	70	80	90	90	107	107	115
SFB	2	SFB-XF1-Zone0	70	80	90	90	107	107	115
SFB	2	SFB-XF0-Zone0	70	80	90	90	107	107	115
SFB	3	Intake-Zone0	56	62	75	63	82	70	87
SFB	3	Exhaust-Zone1	56	62	75	63	82	70	87
SFB	3	IntakeA-Zone0	56	62	75	63	82	70	87
SFB	3	IntakeB-Zone1	56	62	75	63	82	70	87
SFB	3	Exhaust-Zone0	56	62	75	63	82	70	87
SFB	3	SFB-XF2-Zone1	70	80	90	90	107	107	115
SFB	3	SFB-XF1-Zone0	70	80	90	90	107	107	115
SFB	3	SFB-XF0-Zone0	70	80	90	90	107	107	115
SFB	4	Intake-Zone0	56	62	75	63	82	70	87
SFB	4	Exhaust-Zone1	56	62	75	63	82	70	87
SFB	4	IntakeA-Zone0	56	62	75	63	82	70	87
SFB	4	IntakeB-Zone1	56	62	75	63	82	70	87
SFB	4	Exhaust-Zone0	56	62	75	63	82	70	87
SFB	4	SFB-XF2-Zone1	70	80	90	90	107	107	115
SFB	4	SFB-XF1-Zone0	70	80	90	90	107	107	115
SFB	4	SFB-XF0-Zone0	70	80	90	90	107	107	115
SFB	5	Intake-Zone0	56	62	75	63	82	70	87
SFB	5	Exhaust-Zone1	56	62	75	63	82	70	87
SFB	5	IntakeA-Zone0	56	62	75	63	82	70	87
SFB	5	IntakeB-Zone1	56	62	75	63	82	70	87
SFB	5	Exhaust-Zone0	56	62	75	63	82	70	87
SFB	5	SFB-XF2-Zone1	70	80	90	90	107	107	115
SFB	5	SFB-XF1-Zone0	70	80	90	90	107	107	115
SFB	5	SFB-XF0-Zone0	70	80	90	90	107	107	115
SFB	6	Intake-Zone0	56	62	75	63	82	70	87
SFB	6	Exhaust-Zone1	56	62	75	63	82	70	87
SFB	6	IntakeA-Zone0	56	62	75	63	82	70	87
SFB	6	IntakeB-Zone1	56	62	75	63	82	70	87
SFB	6	Exhaust-Zone0	56	62	75	63	82	70	87
SFB	6	SFB-XF2-Zone1	70	80	90	90	107	107	115
SFB	6	SFB-XF1-Zone0	70	80	90	90	107	107	115
SFB	6	SFB-XF0-Zone0	70	80	90	90	107	107	115
SFB	7	Intake-Zone0	56	62	75	63	82	70	87
SFB	7	Exhaust-Zone1	56	62	75	63	82	70	87
SFB	7	IntakeA-Zone0	56	62	75	63	82	70	87
SFB	7	IntakeB-Zone1	56	62	75	63	82	70	87
SFB	7	Exhaust-Zone0	56	62	75	63	82	70	87
SFB	7	SFB-XF2-Zone1	70	80	90	90	107	107	115
SFB	7	SFB-XF1-Zone0	70	80	90	90	107	107	115
SFB	7	SFB-XF0-Zone0	70	80	90	90	107	107	115
FPC	0		55	60	75	65	95	80	100
FPC	1		55	60	75	65	90	80	95
FPC	2		55	60	75	65	95	80	100

```
FPC 3                    55    60       75       65       90       80       95
FPC 4                    55    60       75       65       90       80       95
FPC 5                    55    60       75       65       95       80      100
FPC 6                    55    60       75       65       90       80       95
FPC 7                    55    60       75       65       95       80      100
FPC 8                    55    60       75       65       90       80       95
FPC 9                    55    60       75       65       95       80      100
ADC 0 Intake             56    62       75       63       83       76       95
ADC 0 Exhaust            56    62       75       63       83       76       95
ADC 0 ADC-XF1            70    80       90       90      107      107      115
ADC 0 ADC-XF0            70    80       90       90      107      107      115
ADC 1 Intake             56    62       75       63       83       76       95
ADC 1 Exhaust            56    62       75       63       83       76       95
ADC 1 ADC-XF1            70    80       90       90      107      107      115
ADC 1 ADC-XF0            70    80       90       90      107      107      115
ADC 2 Intake             56    62       75       63       83       76       95
ADC 2 Exhaust            56    62       75       63       83       76       95
ADC 2 ADC-XF1            70    80       90       90      107      107      115
ADC 2 ADC-XF0            70    80       90       90      107      107      115
ADC 3 Intake             56    62       75       63       83       76       95
ADC 3 Exhaust            56    62       75       63       83       76       95
ADC 3 ADC-XF1            70    80       90       90      107      107      115
ADC 3 ADC-XF0            70    80       90       90      107      107      115
ADC 4 Intake             56    62       75       63       83       76       95
ADC 4 Exhaust            56    62       75       63       83       76       95
ADC 4 ADC-XF1            70    80       90       90      107      107      115
ADC 4 ADC-XF0            70    80       90       90      107      107      115
ADC 5 Intake             56    62       75       63       83       76       95
ADC 5 Exhaust            56    62       75       63       83       76       95
ADC 5 ADC-XF1            70    80       90       90      107      107      115
ADC 5 ADC-XF0            70    80       90       90      107      107      115
ADC 6 Intake             56    62       75       63       83       76       95
ADC 6 Exhaust            56    62       75       63       83       76       95
ADC 6 ADC-XF1            70    80       90       90      107      107      115
ADC 6 ADC-XF0            70    80       90       90      107      107      115
ADC 7 Intake             56    62       75       63       83       76       95
ADC 7 Exhaust            56    62       75       63       83       76       95
ADC 7 ADC-XF1            70    80       90       90      107      107      115
ADC 7 ADC-XF0            70    80       90       90      107      107      115
ADC 8 Intake             56    62       75       63       83       76       95
ADC 8 Exhaust            56    62       75       63       83       76       95
ADC 8 ADC-XF1            70    80       90       90      107      107      115
ADC 8 ADC-XF0            70    80       90       90      107      107      115
ADC 9 Intake             56    62       75       63       83       76       95
ADC 9 Exhaust            56    62       75       63       83       76       95
ADC 9 ADC-XF1            70    80       90       90      107      107      115
ADC 9 ADC-XF0            70    80       90       90      107      107      115
```

show chassis temperature-thresholds (MX2020 Router)

```
user@host> show chassis temperature-thresholds
                    Fan speed        Yellow alarm      Red alarm    Fire Shutdown

                   (degrees C)    (degrees C)      (degrees C)     (degrees C)
Item                Normal  High   Normal  Bad fan   Normal  Bad fan  Normal
Routing Engine 0      70    80      95       95       110      110      112
Routing Engine 1      70    80      95       95       110      110      112
CB 0 IntakeA-Zone0    60    65      78       75        85       80       95
CB 0 IntakeB-Zone1    60    65      78       75        85       80       95
CB 0 IntakeC-Zone0    60    65      78       75        85       80       95
CB 0 ExhaustA-Zone0   60    65      78       75        85       80       95
```

CB 0 ExhaustB-Zone1	60	65	78	75	85	80	95
CB 0 TCBC-Zone0	60	65	78	75	85	80	95
CB 1 IntakeA-Zone0	60	65	78	75	85	80	95
CB 1 IntakeB-Zone1	60	65	78	75	85	80	95
CB 1 IntakeC-Zone0	60	65	78	75	85	80	95
CB 1 ExhaustA-Zone0	60	65	78	75	85	80	95
CB 1 ExhaustB-Zone1	60	65	78	75	85	80	95
CB 1 TCBC-Zone0	60	65	78	75	85	80	95
SPMB 0 Intake	56	62	75	63	83	76	95
SPMB 1 Intake	56	62	75	63	83	76	95
SFB 0 Intake-Zone0	56	62	75	63	82	70	87
SFB 0 Exhaust-Zone1	56	62	75	63	82	70	87
SFB 0 IntakeA-Zone0	56	62	75	63	82	70	87
SFB 0 IntakeB-Zone1	56	62	75	63	82	70	87
SFB 0 Exhaust-Zone0	56	62	75	63	82	70	87
SFB 0 SFB-XF2-Zone1	70	80	90	90	107	107	115
SFB 0 SFB-XF1-Zone0	70	80	90	90	107	107	115
SFB 0 SFB-XF0-Zone0	70	80	90	90	107	107	115
SFB 1 Intake-Zone0	56	62	75	63	82	70	87
SFB 1 Exhaust-Zone1	56	62	75	63	82	70	87
SFB 1 IntakeA-Zone0	56	62	75	63	82	70	87
SFB 1 IntakeB-Zone1	56	62	75	63	82	70	87
SFB 1 Exhaust-Zone0	56	62	75	63	82	70	87
SFB 1 SFB-XF2-Zone1	70	80	90	90	107	107	115
SFB 1 SFB-XF1-Zone0	70	80	90	90	107	107	115
SFB 1 SFB-XF0-Zone0	70	80	90	90	107	107	115
SFB 2 Intake-Zone0	56	62	75	63	82	70	87
SFB 2 Exhaust-Zone1	56	62	75	63	82	70	87
SFB 2 IntakeA-Zone0	56	62	75	63	82	70	87
SFB 2 IntakeB-Zone1	56	62	75	63	82	70	87
SFB 2 Exhaust-Zone0	56	62	75	63	82	70	87
SFB 2 SFB-XF2-Zone1	70	80	90	90	107	107	115
SFB 2 SFB-XF1-Zone0	70	80	90	90	107	107	115
SFB 2 SFB-XF0-Zone0	70	80	90	90	107	107	115
SFB 3 Intake-Zone0	56	62	75	63	82	70	87
SFB 3 Exhaust-Zone1	56	62	75	63	82	70	87
SFB 3 IntakeA-Zone0	56	62	75	63	82	70	87
SFB 3 IntakeB-Zone1	56	62	75	63	82	70	87
SFB 3 Exhaust-Zone0	56	62	75	63	82	70	87
SFB 3 SFB-XF2-Zone1	70	80	90	90	107	107	115
SFB 3 SFB-XF1-Zone0	70	80	90	90	107	107	115
SFB 3 SFB-XF0-Zone0	70	80	90	90	107	107	115
SFB 4 Intake-Zone0	56	62	75	63	82	70	87
SFB 4 Exhaust-Zone1	56	62	75	63	82	70	87
SFB 4 IntakeA-Zone0	56	62	75	63	82	70	87
SFB 4 IntakeB-Zone1	56	62	75	63	82	70	87
SFB 4 Exhaust-Zone0	56	62	75	63	82	70	87
SFB 4 SFB-XF2-Zone1	70	80	90	90	107	107	115
SFB 4 SFB-XF1-Zone0	70	80	90	90	107	107	115
SFB 4 SFB-XF0-Zone0	70	80	90	90	107	107	115
SFB 5 Intake-Zone0	56	62	75	63	82	70	87
SFB 5 Exhaust-Zone1	56	62	75	63	82	70	87
SFB 5 IntakeA-Zone0	56	62	75	63	82	70	87
SFB 5 IntakeB-Zone1	56	62	75	63	82	70	87
SFB 5 Exhaust-Zone0	56	62	75	63	82	70	87
SFB 5 SFB-XF2-Zone1	70	80	90	90	107	107	115
SFB 5 SFB-XF1-Zone0	70	80	90	90	107	107	115
SFB 5 SFB-XF0-Zone0	70	80	90	90	107	107	115
SFB 6 Intake-Zone0	56	62	75	63	82	70	87
SFB 6 Exhaust-Zone1	56	62	75	63	82	70	87
SFB 6 IntakeA-Zone0	56	62	75	63	82	70	87

SFB 6 IntakeB-Zone1	56	62	75	63	82	70	87
SFB 6 Exhaust-Zone0	56	62	75	63	82	70	87
SFB 6 SFB-XF2-Zone1	70	80	90	90	107	107	115
SFB 6 SFB-XF1-Zone0	70	80	90	90	107	107	115
SFB 6 SFB-XF0-Zone0	70	80	90	90	107	107	115
SFB 7 Intake-Zone0	56	62	75	63	82	70	87
SFB 7 Exhaust-Zone1	56	62	75	63	82	70	87
SFB 7 IntakeA-Zone0	56	62	75	63	82	70	87
SFB 7 IntakeB-Zone1	56	62	75	63	82	70	87
SFB 7 Exhaust-Zone0	56	62	75	63	82	70	87
SFB 7 SFB-XF2-Zone1	70	80	90	90	107	107	115
SFB 7 SFB-XF1-Zone0	70	80	90	90	107	107	115
SFB 7 SFB-XF0-Zone0	70	80	90	90	107	107	115
FPC 0	55	60	75	65	90	80	95
FPC 1	55	60	75	65	90	80	95
FPC 2	55	60	75	65	90	80	95
FPC 3	55	60	75	65	90	80	95
FPC 4	55	60	75	65	90	80	95
FPC 5	55	60	75	65	90	80	95
FPC 6	55	60	75	65	90	80	95
FPC 7	55	60	75	65	90	80	95
FPC 8	55	60	75	65	90	80	95
FPC 9	55	60	75	65	90	80	95
FPC 10	55	60	75	65	90	80	95
FPC 11	55	60	75	65	90	80	95
FPC 12	55	60	75	65	90	80	95
FPC 13	55	60	75	65	90	80	95
FPC 14	55	60	75	65	90	80	95
FPC 15	55	60	75	65	90	80	95
FPC 16	55	60	75	65	90	80	95
FPC 17	55	60	75	65	90	80	95
FPC 18	55	60	75	65	90	80	95
FPC 19	55	60	75	65	90	80	95
ADC 0 Intake	56	62	75	63	83	76	95
ADC 0 Exhaust	56	62	75	63	83	76	95
ADC 0 ADC-XF1	70	80	90	90	107	107	115
ADC 0 ADC-XF0	70	80	90	90	107	107	115
ADC 1 Intake	56	62	75	63	83	76	95
ADC 1 Exhaust	56	62	75	63	83	76	95
ADC 1 ADC-XF1	70	80	90	90	107	107	115
ADC 1 ADC-XF0	70	80	90	90	107	107	115
ADC 2 Intake	56	62	75	63	83	76	95
ADC 2 Exhaust	56	62	75	63	83	76	95
ADC 2 ADC-XF1	70	80	90	90	107	107	115
ADC 2 ADC-XF0	70	80	90	90	107	107	115
ADC 3 Intake	56	62	75	63	83	76	95
ADC 3 Exhaust	56	62	75	63	83	76	95
ADC 3 ADC-XF1	70	80	90	90	107	107	115
ADC 3 ADC-XF0	70	80	90	90	107	107	115
ADC 4 Intake	56	62	75	63	83	76	95
ADC 4 Exhaust	56	62	75	63	83	76	95
ADC 4 ADC-XF1	70	80	90	90	107	107	115
ADC 4 ADC-XF0	70	80	90	90	107	107	115
ADC 5 Intake	56	62	75	63	83	76	95
ADC 5 Exhaust	56	62	75	63	83	76	95
ADC 5 ADC-XF1	70	80	90	90	107	107	115
ADC 5 ADC-XF0	70	80	90	90	107	107	115
ADC 6 Intake	56	62	75	63	83	76	95
ADC 6 Exhaust	56	62	75	63	83	76	95
ADC 6 ADC-XF1	70	80	90	90	107	107	115
ADC 6 ADC-XF0	70	80	90	90	107	107	115

```
ADC 7 Intake          56    62       75       63       83       76       95
ADC 7 Exhaust         56    62       75       63       83       76       95
ADC 7 ADC-XF1         70    80       90       90      107      107      115
ADC 7 ADC-XF0         70    80       90       90      107      107      115
ADC 8 Intake          56    62       75       63       83       76       95
ADC 8 Exhaust         56    62       75       63       83       76       95
ADC 8 ADC-XF1         70    80       90       90      107      107      115
ADC 8 ADC-XF0         70    80       90       90      107      107      115
ADC 9 Intake          56    62       75       63       83       76       95
ADC 9 Exhaust         56    62       75       63       83       76       95
ADC 9 ADC-XF1         70    80       90       90      107      107      115
ADC 9 ADC-XF0         70    80       90       90      107      107      115
ADC 10 Intake         56    62       75       63       83       76       95
ADC 10 Exhaust        56    62       75       63       83       76       95
ADC 10 ADC-XF1        70    80       90       90      107      107      115
ADC 10 ADC-XF0        70    80       90       90      107      107      115
ADC 11 Intake         56    62       75       63       83       76       95
ADC 11 Exhaust        56    62       75       63       83       76       95
ADC 11 ADC-XF1        70    80       90       90      107      107      115
ADC 11 ADC-XF0        70    80       90       90      107      107      115
ADC 12 Intake         56    62       75       63       83       76       95
ADC 12 Exhaust        56    62       75       63       83       76       95
ADC 12 ADC-XF1        70    80       90       90      107      107      115
ADC 12 ADC-XF0        70    80       90       90      107      107      115
ADC 13 Intake         56    62       75       63       83       76       95
ADC 13 Exhaust        56    62       75       63       83       76       95
ADC 13 ADC-XF1        70    80       90       90      107      107      115
ADC 13 ADC-XF0        70    80       90       90      107      107      115
ADC 14 Intake         56    62       75       63       83       76       95
ADC 14 Exhaust        56    62       75       63       83       76       95
ADC 14 ADC-XF1        70    80       90       90      107      107      115
ADC 14 ADC-XF0        70    80       90       90      107      107      115
ADC 15 Intake         56    62       75       63       83       76       95
ADC 15 Exhaust        56    62       75       63       83       76       95
ADC 15 ADC-XF1        70    80       90       90      107      107      115
ADC 15 ADC-XF0        70    80       90       90      107      107      115
ADC 16 Intake         56    62       75       63       83       76       95
ADC 16 Exhaust        56    62       75       63       83       76       95
ADC 16 ADC-XF1        70    80       90       90      107      107      115
ADC 16 ADC-XF0        70    80       90       90      107      107      115
ADC 17 Intake         56    62       75       63       83       76       95
ADC 17 Exhaust        56    62       75       63       83       76       95
ADC 17 ADC-XF1        70    80       90       90      107      107      115
ADC 17 ADC-XF0        70    80       90       90      107      107      115
ADC 18 Intake         56    62       75       63       83       76       95
ADC 18 Exhaust        56    62       75       63       83       76       95
ADC 18 ADC-XF1        70    80       90       90      107      107      115
ADC 18 ADC-XF0        70    80       90       90      107      107      115
ADC 19 Intake         56    62       75       63       83       76       95
ADC 19 Exhaust        56    62       75       63       83       76       95
ADC 19 ADC-XF1        70    80       90       90      107      107      115
ADC 19 ADC-XF0        70    80       90       90      107      107      115
```

show chassis temperature-thresholds (MX2020 Router with MPC4E)

```
user@host> show chassis temperature-thresholds
     Fan speed      Yellow alarm      Red alarm      Fire Shutdown
                     (degrees C)      (degrees C)     (degrees C)      (degrees
C)
Item                Normal  High   Normal  Bad fan   Normal  Bad fan     Normal
Routing Engine 0       70    80       95       95      110      110      112
```

Routing Engine 1	70	80	95	95	110	110	112
CB 0 IntakeA-Zone0	60	65	78	75	85	80	95
CB 0 IntakeB-Zone1	60	65	78	75	85	80	95
CB 0 IntakeC-Zone0	60	65	78	75	85	80	95
CB 0 ExhaustA-Zone0	60	65	78	75	85	80	95
CB 0 ExhaustB-Zone1	60	65	78	75	85	80	95
CB 0 TCBC-Zone0	60	65	78	75	85	80	95
CB 1 IntakeA-Zone0	60	65	78	75	85	80	95
CB 1 IntakeB-Zone1	60	65	78	75	85	80	95
CB 1 IntakeC-Zone0	60	65	78	75	85	80	95
CB 1 ExhaustA-Zone0	60	65	78	75	85	80	95
CB 1 ExhaustB-Zone1	60	65	78	75	85	80	95
CB 1 TCBC-Zone0	60	65	78	75	85	80	95
SPMB 0 Intake	56	62	75	63	83	76	95
SPMB 1 Intake	56	62	75	63	83	76	95
SFB 0 Intake-Zone0	56	62	70	70	85	85	89
SFB 0 Exhaust-Zone1	56	62	70	70	85	85	89
SFB 0 IntakeA-Zone0	56	62	70	70	85	85	89
SFB 0 IntakeB-Zone1	56	62	70	70	85	85	89
SFB 0 Exhaust-Zone0	56	62	70	70	85	85	89
SFB 0 SFB-XF2-Zone1	70	75	90	85	95	90	100
SFB 0 SFB-XF1-Zone0	70	75	90	85	95	90	100
SFB 0 SFB-XF0-Zone0	70	75	90	85	95	90	100
SFB 1 Intake-Zone0	56	62	70	70	85	85	89
SFB 1 Exhaust-Zone1	56	62	70	70	85	85	89
SFB 1 IntakeA-Zone0	56	62	70	70	85	85	89
SFB 1 IntakeB-Zone1	56	62	70	70	85	85	89
SFB 1 Exhaust-Zone0	56	62	70	70	85	85	89
SFB 1 SFB-XF2-Zone1	70	75	90	85	95	90	100
SFB 1 SFB-XF1-Zone0	70	75	90	85	95	90	100
SFB 1 SFB-XF0-Zone0	70	75	90	85	95	90	100
SFB 2 Intake-Zone0	56	62	70	70	85	85	89
SFB 2 Exhaust-Zone1	56	62	70	70	85	85	89
SFB 2 IntakeA-Zone0	56	62	70	70	85	85	89
SFB 2 IntakeB-Zone1	56	62	70	70	85	85	89
SFB 2 Exhaust-Zone0	56	62	70	70	85	85	89
SFB 2 SFB-XF2-Zone1	70	75	90	85	95	90	100
SFB 2 SFB-XF1-Zone0	70	75	90	85	95	90	100
SFB 2 SFB-XF0-Zone0	70	75	90	85	95	90	100
SFB 3 Intake-Zone0	56	62	70	70	85	85	89
SFB 3 Exhaust-Zone1	56	62	70	70	85	85	89
SFB 3 IntakeA-Zone0	56	62	70	70	85	85	89
SFB 3 IntakeB-Zone1	56	62	70	70	85	85	89
SFB 3 Exhaust-Zone0	56	62	70	70	85	85	89
SFB 3 SFB-XF2-Zone1	70	75	90	85	95	90	100
SFB 3 SFB-XF1-Zone0	70	75	90	85	95	90	100
SFB 3 SFB-XF0-Zone0	70	75	90	85	95	90	100
SFB 4 Intake-Zone0	56	62	70	70	85	85	89
SFB 4 Exhaust-Zone1	56	62	70	70	85	85	89
SFB 4 IntakeA-Zone0	56	62	70	70	85	85	89
SFB 4 IntakeB-Zone1	56	62	70	70	85	85	89
SFB 4 Exhaust-Zone0	56	62	70	70	85	85	89
SFB 4 SFB-XF2-Zone1	70	75	90	85	95	90	100
SFB 4 SFB-XF1-Zone0	70	75	90	85	95	90	100
SFB 4 SFB-XF0-Zone0	70	75	90	85	95	90	100
SFB 5 Intake-Zone0	56	62	70	70	85	85	89
SFB 5 Exhaust-Zone1	56	62	70	70	85	85	89
SFB 5 IntakeA-Zone0	56	62	70	70	85	85	89
SFB 5 IntakeB-Zone1	56	62	70	70	85	85	89
SFB 5 Exhaust-Zone0	56	62	70	70	85	85	89
SFB 5 SFB-XF2-Zone1	70	75	90	85	95	90	100

```
SFB 5 SFB-XF1-Zone0      70    75       90       85       95       90      100
SFB 5 SFB-XF0-Zone0      70    75       90       85       95       90      100
SFB 6 Intake-Zone0       56    62       70       70       85       85       89
SFB 6 Exhaust-Zone1      56    62       70       70       85       85       89
SFB 6 IntakeA-Zone0      56    62       70       70       85       85       89
SFB 6 IntakeB-Zone1      56    62       70       70       85       85       89
SFB 6 Exhaust-Zone0      56    62       70       70       85       85       89
SFB 6 SFB-XF2-Zone1      70    75       90       85       95       90      100
SFB 6 SFB-XF1-Zone0      70    75       90       85       95       90      100
SFB 6 SFB-XF0-Zone0      70    75       90       85       95       90      100
SFB 7 Intake-Zone0       56    62       70       70       85       85       89
SFB 7 Exhaust-Zone1      56    62       70       70       85       85       89
SFB 7 IntakeA-Zone0      56    62       70       70       85       85       89
SFB 7 IntakeB-Zone1      56    62       70       70       85       85       89
SFB 7 Exhaust-Zone0      56    62       70       70       85       85       89
SFB 7 SFB-XF2-Zone1      70    75       90       85       95       90      100
SFB 7 SFB-XF1-Zone0      70    75       90       85       95       90      100
SFB 7 SFB-XF0-Zone0      70    75       90       85       95       90      100
FPC 0                    55    60       75       65       90       80       95
FPC 9                    55    60       75       65       90       80       95
FPC 10                   55    60       75       65       90       80       95
FPC 14                   55    60       75       65       95       80      100
FPC 19                   55    60       75       65       90       80       95
ADC 0 Intake             50    55       60       60       65       65       80
ADC 0 Exhaust            50    55       60       60       65       65       80
ADC 0 ADC-XF1            70    75       90       85       95       90      100
ADC 0 ADC-XF0            70    75       90       85       95       90      100
ADC 9 Intake             50    55       60       60       65       65       80
ADC 9 Exhaust            50    55       60       60       65       65       80
ADC 9 ADC-XF1            70    75       90       85       95       90      100
ADC 9 ADC-XF0            70    75       90       85       95       90      100
ADC 10 Intake            50    55       60       60       65       65       80
ADC 10 Exhaust           50    55       60       60       65       65       80
ADC 10 ADC-XF1           70    75       90       85       95       90      100
ADC 10 ADC-XF0           70    75       90       85       95       90      100
ADC 14 Intake            50    55       60       60       65       65       80
ADC 14 Exhaust           50    55       60       60       65       65       80
ADC 14 ADC-XF1           70    75       90       85       95       90      100
ADC 14 ADC-XF0           70    75       90       85       95       90      100
ADC 19 Intake            50    55       60       60       65       65       80
ADC 19 Exhaust           50    55       60       60       65       65       80
ADC 19 ADC-XF1           70    75       90       85       95       90      100
ADC 19 ADC-XF0           70    75       90       85       95       90      100
```

show chassis temperature-thresholds (MX2008 Routers)

```
user@host> show chassis temperature-thresholds
                          Fan speed      Yellow alarm      Red alarm      Fire
Shutdown
                         (degrees C)     (degrees C)     (degrees C)
(degrees C)
Item                    Normal  High   Normal  Bad fan   Normal  Bad fan
Normal
Routing Engine 0 CPU        58    63       78       75       93       90
98
Routing Engine 1 CPU        58    63       78       75       93       90
98
CB 0 Inlet1                 55    60       65       62       75       72
85
CB 0 Inlet2                 45    50       61       58       80       77
90
```

```
CB 0 Inlet3                    57     62        68        65        80        77
90
CB 0 Inlet4                    55     60        80        77        90        87
95
CB 0 Exhaust1                  55     60        65        62        75        72
85
CB 0 Exhaust2                  50     55        60        57        80        77
90
CB 0 Exhaust3                  70     75        81        78        91        88
96
CB 0 Exhaust4                  75     80        90        87       100        97
105
CB 1 Inlet1                    55     60        65        62        75        72
85
CB 1 Inlet2                    45     50        61        58        80        77
90
CB 1 Inlet3                    57     62        68        65        80        77
90
CB 1 Inlet4                    55     60        80        77        90        87
95
CB 1 Exhaust1                  55     60        65        62        75        72
85
CB 1 Exhaust2                  50     55        60        57        80        77
90
CB 1 Exhaust3                  70     75        81        78        91        88
96
CB 1 Exhaust4                  75     80        90        87       100        97
105
SFB 0 Inlet1                   49     54        62        59        76        73
81
SFB 0 Inlet2                   65     70        71        68        83        80
88
SFB 0 Exhaust1                 45     50        61        58        75        72
80
SFB 0 Exhaust2                 60     65        69        66        80        77
85
SFB 0 SFB2-PF-local            65     70        75        72        95        92
100
SFB 0 SFB2-PF-die              88     93        98        95       118       115
120
SFB 1 Inlet1                   49     54        62        59        76        73
81
SFB 1 Inlet2                   65     70        71        68        83        80
88
SFB 1 Exhaust1                 45     50        61        58        75        72
80
SFB 1 Exhaust2                 60     65        69        66        80        77
85
SFB 1 SFB2-PF-local            65     70        75        72        95        92
100
SFB 1 SFB2-PF-die              88     93        98        95       118       115
120
SFB 2 Inlet1                   49     54        62        59        76        73
81
SFB 2 Inlet2                   65     70        71        68        83        80
88
SFB 2 Exhaust1                 45     50        61        58        75        72
80
SFB 2 Exhaust2                 60     65        69        66        80        77
85
SFB 2 SFB2-PF-local            65     70        75        72        95        92
```

```
100
SFB 2 SFB2-PF-die            88    93       98       95      118      115
120
SFB 3 Inlet1                 49    54       62       59       76       73
81
SFB 3 Inlet2                 65    70       71       68       83       80
88
SFB 3 Exhaust1               45    50       61       58       75       72
80
SFB 3 Exhaust2               60    65       69       66       80       77
85
SFB 3 SFB2-PF-local          65    70       75       72       95       92
100
SFB 3 SFB2-PF-die            88    93       98       95      118      115
120
SFB 4 Inlet1                 49    54       62       59       76       73
81
SFB 4 Inlet2                 65    70       71       68       83       80
88
SFB 4 Exhaust1               45    50       61       58       75       72
80
SFB 4 Exhaust2               60    65       69       66       80       77
85
SFB 4 SFB2-PF-local          65    70       75       72       95       92
100
SFB 4 SFB2-PF-die            88    93       98       95      118      115
120
SFB 5 Inlet1                 49    54       62       59       76       73
81
SFB 5 Inlet2                 65    70       71       68       83       80
88
SFB 5 Exhaust1               45    50       61       58       75       72
80
SFB 5 Exhaust2               60    65       69       66       80       77
85
SFB 5 SFB2-PF-local          65    70       75       72       95       92
100
SFB 5 SFB2-PF-die            88    93       98       95      118      115
120
SFB 6 Inlet1                 49    54       62       59       76       73
81
SFB 6 Inlet2                 65    70       71       68       83       80
88
SFB 6 Exhaust1               45    50       61       58       75       72
80
SFB 6 Exhaust2               60    65       69       66       80       77
85
SFB 6 SFB2-PF-local          65    70       75       72       95       92
100
SFB 6 SFB2-PF-die            88    93       98       95      118      115
120
SFB 7 Inlet1                 49    54       62       59       76       73
81
SFB 7 Inlet2                 65    70       71       68       83       80
88
SFB 7 Exhaust1               45    50       61       58       75       72
80
SFB 7 Exhaust2               60    65       69       66       80       77
85
SFB 7 SFB2-PF-local          65    70       75       72       95       92
100
```

```
SFB 7 SFB2-PF-die            88    93       98       95       118       115
120
FPC 0                        55    60       75       65        90        80
95
FPC 3                        55    60       75       65       105        80
110
FPC 5                        55    60       75       65       105        80
110
FPC 7                        55    60       75       65        90        80
95
FPC 9 Intake                 60    65       75       75        85        85
95
FPC 9 Exhaust A              60    65       75       75        85        85
95
FPC 9 Exhaust B              60    65       75       75        85        85
95
FPC 9 XL 0 Chip              70    75       85       85       102       102
110
FPC 9 XL 0 XR2 0 Chip        75    80       90       90       105       105
115
FPC 9 XL 0 XR2 1 Chip        75    80       90       90       105       105
115
FPC 9 XL 1 Chip              70    75       85       85       102       102
110
FPC 9 XL 1 XR2 0 Chip        75    80       90       90       105       105
115
FPC 9 XL 1 XR2 1 Chip        75    80       90       90       105       105
115
FPC 9 XM 0 Chip              70    75       85       85       100       100
110
FPC 9 XM 1 Chip              70    75       85       85       100       100
110
FPC 9 XM 2 Chip              70    75       85       85       100       100
110
FPC 9 XM 3 Chip              70    75       85       85       100       100
110
FPC 9 PCIe Switch Chip       80    85       95       95       105       105
120
ADC 0 Intake                 50    55       65       65        75        75
80
ADC 0 Exhaust                50    55       65       65        75        75
80
ADC 0 ADC-XF1                70    75       90       85        95        90
100
ADC 0 ADC-XF0                70    75       90       85        95        90
100
ADC 3 Intake                 50    55       65       65        75        75
80
ADC 3 Exhaust                50    55       65       65        75        75
80
ADC 3 ADC-XF1                70    75       90       85        95        90
100
ADC 3 ADC-XF0                70    75       90       85        95        90
100
ADC 5 Intake                 50    55       65       65        75        75
80
ADC 5 Exhaust                50    55       65       65        75        75
80
ADC 5 ADC-XF1                70    75       90       85        95        90
100
ADC 5 ADC-XF0                70    75       90       85        95        90
```

```
100
ADC 7 Intake                 50    55       65       65       75       75
80
ADC 7 Exhaust                50    55       65       65       75       75
80
ADC 7 ADC-XF1                70    75       90       85       95       90
100
ADC 7 ADC-XF0                70    75       90       85       95       90
100
```

show chassis temperature-thresholds (MX10003 Router)

```
user@host> show chassis temperature-thresholds

                           Fan speed      Yellow alarm      Red alarm      Fire
Shutdown
                          (degrees C)     (degrees C)     (degrees C)
(degrees C)
Item                     Normal  High   Normal  Bad fan   Normal  Bad fan
Normal
Routing Engine 0             48    54       85       85      100      100
102
Routing Engine 1             48    54       85       85      100      100
102
CB 0 Exhaust Temp Sensor     60    65       75       75       85       85
95
CB 0 Inlet Temp Sensor       60    65       75       75       85       85
95
CB 0 CPU DIE Temp Sensor     83    90       98       98      105      105
110
CB 1 Exhaust Temp Sensor     60    65       75       75       85       85
95
CB 1 Inlet Temp Sensor       60    65       75       75       85       85
95
CB 1 CPU DIE Temp Sensor     83    90       98       98      105      105
110
FPC 0 Intake Temp Sensor     40    45       75       70       85       80
95
FPC 0 Exhaust-A Temp Sensor   55   60       85       80       90       90
100
FPC 0 Exhaust-B Temp Sensor   55   60       85       80       90       90
100
FPC 0 EA0 Chip               87    92       97       97      105      105
110
FPC 0 EA0-XR0 Chip           88    93       98       98      120      120
125
FPC 0 EA0-XR1 Chip           88    93       98       98      120      120
125
FPC 0 EA1 Chip               87    92       97       97      105      105
110
FPC 0 EA1-XR0 Chip           88    93       98       98      120      120
125
FPC 0 EA1-XR1 Chip           88    93       98       98      120      120
125
FPC 0 EA2 Chip               87    92       97       97      105      105
110
FPC 0 EA2-XR0 Chip           88    93       98       98      120      120
125
FPC 0 EA2-XR1 Chip           88    93       98       98      120      120
125
FPC 0 PF Chip                89    94      104      104      120      120
```

```
120
FPC 0 EA0_HMC0 Logic die     88    93      103      103      120      120
125
FPC 0 EA0_HMC0 DRAM botm     83    88       98       98      120      120
125
FPC 0 EA0_HMC1 Logic die     88    93      103      103      120      120
125
FPC 0 EA0_HMC1 DRAM botm     83    88       98       98      120      120
125
FPC 0 EA0_HMC2 Logic die     88    93      103      103      120      120
125
FPC 0 EA0_HMC2 DRAM botm     83    88       98       98      120      120
125
FPC 0 EA1_HMC0 Logic die     88    93      103      103      120      120
125
FPC 0 EA1_HMC0 DRAM botm     83    88       98       98      120      120
125
FPC 0 EA1_HMC1 Logic die     88    93      103      103      120      120
125
FPC 0 EA1_HMC1 DRAM botm     83    88       98       98      120      120
125
FPC 0 EA1_HMC2 Logic die     88    93      103      103      120      120
125
FPC 0 EA1_HMC2 DRAM botm     83    88       98       98      120      120
125
FPC 0 EA2_HMC0 Logic die     88    93      103      103      120      120
125
FPC 0 EA2_HMC0 DRAM botm     83    88       98       98      120      120
125
FPC 0 EA2_HMC1 Logic die     88    93      103      103      120      120
125
FPC 0 EA2_HMC1 DRAM botm     83    88       98       98      120      120
125
FPC 0 EA2_HMC2 Logic die     88    93      103      103      120      120
125
FPC 0 EA2_HMC2 DRAM botm     83    88       98       98      120      120
125
FPC 1 Intake Temp Sensor     40    45       75       70       85       80
95
FPC 1 Exhaust-A Temp Sensor   55   60       85       80       90       90
100
FPC 1 Exhaust-B Temp Sensor   55   60       85       80       90       90
100
FPC 1 EA0 Chip               87    92       97       97      105      105
110
FPC 1 EA0-XR0 Chip           88    93       98       98      120      120
125
FPC 1 EA0-XR1 Chip           88    93       98       98      120      120
125
FPC 1 EA1 Chip               87    92       97       97      105      105
110
FPC 1 EA1-XR0 Chip           88    93       98       98      120      120
125
FPC 1 EA1-XR1 Chip           88    93       98       98      120      120
125
FPC 1 EA2 Chip               87    92       97       97      105      105
110
FPC 1 EA2-XR0 Chip           88    93       98       98      120      120
125
FPC 1 EA2-XR1 Chip           88    93       98       98      120      120
125
```

```
FPC 1 PF Chip                 89    94      104      104      120      120
120
FPC 1 EA0_HMC0 Logic die      88    93      103      103      120      120
125
FPC 1 EA0_HMC0 DRAM botm      83    88       98       98      120      120
125
FPC 1 EA0_HMC1 Logic die      88    93      103      103      120      120
125
FPC 1 EA0_HMC1 DRAM botm      83    88       98       98      120      120
125
FPC 1 EA0_HMC2 Logic die      88    93      103      103      120      120
125
FPC 1 EA0_HMC2 DRAM botm      83    88       98       98      120      120
125
FPC 1 EA1_HMC0 Logic die      88    93      103      103      120      120
125
FPC 1 EA1_HMC0 DRAM botm      83    88       98       98      120      120
125
FPC 1 EA1_HMC1 Logic die      88    93      103      103      120      120
125
FPC 1 EA1_HMC1 DRAM botm      83    88       98       98      120      120
125
FPC 1 EA1_HMC2 Logic die      88    93      103      103      120      120
125
FPC 1 EA1_HMC2 DRAM botm      83    88       98       98      120      120
125
FPC 1 EA2_HMC0 Logic die      88    93      103      103      120      120
125
FPC 1 EA2_HMC0 DRAM botm      83    88       98       98      120      120
125
FPC 1 EA2_HMC1 Logic die      88    93      103      103      120      120
125
FPC 1 EA2_HMC1 DRAM botm      83    88       98       98      120      120
125
FPC 1 EA2_HMC2 Logic die      88    93      103      103      120      120
125
FPC 1 EA2_HMC2 DRAM botm      83    88       98       98      120      120
125
```

show chassis temperature-thresholds (MX10008 Router)

```
user@host> show chassis temperature-thresholds
                                     Fan speed      Yellow alarm      Red alarm
      Fire Shutdown
                                      (degrees C)      (degrees C)     (degrees
 C)      (degrees C)
Item                                 Normal  High   Normal  Bad fan   Normal
Bad fan     Normal
Routing Engine 0                         65    70       95       95      100
   100        110
Routing Engine 1                         65    70       95       95      100
   100        110
CB 0 Intake A Temp Sensor                30    35       80       80       85
    85         95
CB 0 Intake B Temp Sensor                30    35       80       80       85
    85         95
CB 0 Exhaust A Temp Sensor               40    45       80       80       85
    85         95
CB 0 Exhaust B Temp Sensor               40    45       80       80       85
    85         95
CB 0 Middle Temp Sensor                  40    45       80       80       85
```

```
    85         95
CB 1 Intake A Temp Sensor                30    35       80       80       85
    85         95
CB 1 Intake B Temp Sensor                30    35       80       80       85
    85         95
CB 1 Exhaust A Temp Sensor               40    45       80       80       85
    85         95
CB 1 Exhaust B Temp Sensor               40    45       80       80       85
    85         95
CB 1 Middle Temp Sensor                  40    45       80       80       85
    85         95
FPC 0 Intake-A Temp Sensor               52    62       72       72       85
    85         90
FPC 0 Exhaust-A Temp Sensor              75    85       98       98      103
   103        108
FPC 0 Exhaust-B Temp Sensor              75    85       98       98      103
   103        108
FPC 0 EA0 Temp Sensor                    62    72       90       90      100
   100        105
FPC 0 EA0_XR0 Temp Sensor                77    87      100      100      105
   105        108
FPC 0 EA0_XR1 Temp Sensor                77    87      100      100      105
   105        108
FPC 0 EA1 Temp Sensor                    62    72       90       90      100
   100        105
FPC 0 EA1_XR0 Temp Sensor                77    87      100      100      105
   105        108
FPC 0 EA1_XR1 Temp Sensor                77    87      100      100      105
   105        108
FPC 0 EA2 Temp Sensor                    62    72       90       90      100
   100        105
FPC 0 EA2_XR0 Temp Sensor                77    87      100      100      105
   105        108
FPC 0 EA2_XR1 Temp Sensor                77    87      100      100      105
   105        108
FPC 0 EA3 Temp Sensor                    62    72       90       90      100
   100        105
FPC 0 EA3_XR0 Temp Sensor                77    87      100      100      105
   105        108
FPC 0 EA3_XR1 Temp Sensor                77    87      100      100      105
   105        108
FPC 0 EA4 Temp Sensor                    62    72       90       90      100
   100        105
FPC 0 EA4_XR0 Temp Sensor                77    87      100      100      105
   105        108
FPC 0 EA4_XR1 Temp Sensor                77    87      100      100      105
   105        108
FPC 0 EA5 Temp Sensor                    62    72       90       90      100
   100        105
FPC 0 EA5_XR0 Temp Sensor                77    87      100      100      105
   105        108
FPC 0 EA5_XR1 Temp Sensor                77    87      100      100      105
   105        108
FPC 0 EA0_HMC0 Logic die                 79    89      103      103      110
   110        115
FPC 0 EA0_HMC0 DRAM botm                 74    84       98       98      105
   105        110
FPC 0 EA0_HMC1 Logic die                 79    89      103      103      110
   110        115
FPC 0 EA0_HMC1 DRAM botm                 74    84       98       98      105
   105        110
```

```
FPC 0 EA0_HMC2 Logic die                    79     89       103       103       110
   110        115
FPC 0 EA0_HMC2 DRAM botm                    74     84        98        98       105
   105        110
FPC 0 EA1_HMC0 Logic die                    79     89       103       103       110
   110        115
FPC 0 EA1_HMC0 DRAM botm                    74     84        98        98       105
   105        110
FPC 0 EA1_HMC1 Logic die                    79     89       103       103       110
   110        115
FPC 0 EA1_HMC1 DRAM botm                    74     84        98        98       105
   105        110
FPC 0 EA1_HMC2 Logic die                    79     89       103       103       110
   110        115
FPC 0 EA1_HMC2 DRAM botm                    74     84        98        98       105
   105        110
FPC 0 EA2_HMC0 Logic die                    79     89       103       103       110
   110        115
FPC 0 EA2_HMC0 DRAM botm                    74     84        98        98       105
   105        110
FPC 0 EA2_HMC1 Logic die                    79     89       103       103       110
   110        115
FPC 0 EA2_HMC1 DRAM botm                    74     84        98        98       105
   105        110
FPC 0 EA2_HMC2 Logic die                    79     89       103       103       110
   110        115
FPC 0 EA2_HMC2 DRAM botm                    74     84        98        98       105
   105        110
FPC 0 EA3_HMC0 Logic die                    79     89       103       103       110
   110        115
FPC 0 EA3_HMC0 DRAM botm                    74     84        98        98       105
   105        110
FPC 0 EA3_HMC1 Logic die                    79     89       103       103       110
   110        115
FPC 0 EA3_HMC1 DRAM botm                    74     84        98        98       105
   105        110
FPC 0 EA3_HMC2 Logic die                    79     89       103       103       110
   110        115
FPC 0 EA3_HMC2 DRAM botm                    74     84        98        98       105
   105        110
FPC 0 EA4_HMC0 Logic die                    79     89       103       103       110
   110        115
FPC 0 EA4_HMC0 DRAM botm                    74     84        98        98       105
   105        110
FPC 0 EA4_HMC1 Logic die                    79     89       103       103       110
   110        115
FPC 0 EA4_HMC1 DRAM botm                    74     84        98        98       105
   105        110
FPC 0 EA4_HMC2 Logic die                    79     89       103       103       110
   110        115
FPC 0 EA4_HMC2 DRAM botm                    74     84        98        98       105
   105        110
FPC 0 EA5_HMC0 Logic die                    79     89       103       103       110
   110        115
FPC 0 EA5_HMC0 DRAM botm                    74     84        98        98       105
   105        110
FPC 0 EA5_HMC1 Logic die                    79     89       103       103       110
   110        115
FPC 0 EA5_HMC1 DRAM botm                    74     84        98        98       105
   105        110
FPC 0 EA5_HMC2 Logic die                    79     89       103       103       110
```

```
   110        115
FPC 0 EA5_HMC2 DRAM botm                  74    84       98       98      105
   105        110
FPC 2 Intake-A Temp Sensor                52    62       72       72       85
    85         90
FPC 2 Exhaust-A Temp Sensor               75    85       98       98      103
   103        108
FPC 2 Exhaust-B Temp Sensor               75    85       98       98      103
   103        108
FPC 2 EA0 Temp Sensor                     62    72       90       90      100
   100        105
FPC 2 EA0_XR0 Temp Sensor                 77    87      100      100      105
   105        108
FPC 2 EA0_XR1 Temp Sensor                 77    87      100      100      105
   105        108
FPC 2 EA1 Temp Sensor                     62    72       90       90      100
   100        105
FPC 2 EA1_XR0 Temp Sensor                 77    87      100      100      105
   105        108
FPC 2 EA1_XR1 Temp Sensor                 77    87      100      100      105
   105        108
FPC 2 EA2 Temp Sensor                     62    72       90       90      100
   100        105
FPC 2 EA2_XR0 Temp Sensor                 77    87      100      100      105
   105        108
FPC 2 EA2_XR1 Temp Sensor                 77    87      100      100      105
   105        108
FPC 2 EA3 Temp Sensor                     62    72       90       90      100
   100        105
FPC 2 EA3_XR0 Temp Sensor                 77    87      100      100      105
   105        108
FPC 2 EA3_XR1 Temp Sensor                 77    87      100      100      105
   105        108
FPC 2 EA4 Temp Sensor                     62    72       90       90      100
   100        105
FPC 2 EA4_XR0 Temp Sensor                 77    87      100      100      105
   105        108
FPC 2 EA4_XR1 Temp Sensor                 77    87      100      100      105
   105        108
FPC 2 EA5 Temp Sensor                     62    72       90       90      100
   100        105
FPC 2 EA5_XR0 Temp Sensor                 77    87      100      100      105
   105        108
FPC 2 EA5_XR1 Temp Sensor                 77    87      100      100      105
   105        108
FPC 2 EA0_HMC0 Logic die                  79    89      103      103      110
   110        115
FPC 2 EA0_HMC0 DRAM botm                  74    84       98       98      105
   105        110
FPC 2 EA0_HMC1 Logic die                  79    89      103      103      110
   110        115
FPC 2 EA0_HMC1 DRAM botm                  74    84       98       98      105
   105        110
FPC 2 EA0_HMC2 Logic die                  79    89      103      103      110
   110        115
FPC 2 EA0_HMC2 DRAM botm                  74    84       98       98      105
   105        110
FPC 2 EA1_HMC0 Logic die                  79    89      103      103      110
   110        115
FPC 2 EA1_HMC0 DRAM botm                  74    84       98       98      105
   105        110
```

```
FPC 2 EA1_HMC1 Logic die                    79    89      103      103      110
   110        115
FPC 2 EA1_HMC1 DRAM botm                    74    84       98       98      105
   105        110
FPC 2 EA1_HMC2 Logic die                    79    89      103      103      110
   110        115
FPC 2 EA1_HMC2 DRAM botm                    74    84       98       98      105
   105        110
FPC 2 EA2_HMC0 Logic die                    79    89      103      103      110
   110        115
FPC 2 EA2_HMC0 DRAM botm                    74    84       98       98      105
   105        110
FPC 2 EA2_HMC1 Logic die                    79    89      103      103      110
   110        115
FPC 2 EA2_HMC1 DRAM botm                    74    84       98       98      105
   105        110
FPC 2 EA2_HMC2 Logic die                    79    89      103      103      110
   110        115
FPC 2 EA2_HMC2 DRAM botm                    74    84       98       98      105
   105        110
FPC 2 EA3_HMC0 Logic die                    79    89      103      103      110
   110        115
FPC 2 EA3_HMC0 DRAM botm                    74    84       98       98      105
   105        110
FPC 2 EA3_HMC1 Logic die                    79    89      103      103      110
   110        115
FPC 2 EA3_HMC1 DRAM botm                    74    84       98       98      105
   105        110
FPC 2 EA3_HMC2 Logic die                    79    89      103      103      110
   110        115
FPC 2 EA3_HMC2 DRAM botm                    74    84       98       98      105
   105        110
FPC 2 EA4_HMC0 Logic die                    79    89      103      103      110
   110        115
FPC 2 EA4_HMC0 DRAM botm                    74    84       98       98      105
   105        110
FPC 2 EA4_HMC1 Logic die                    79    89      103      103      110
   110        115
FPC 2 EA4_HMC1 DRAM botm                    74    84       98       98      105
   105        110
FPC 2 EA4_HMC2 Logic die                    79    89      103      103      110
   110        115
FPC 2 EA4_HMC2 DRAM botm                    74    84       98       98      105
   105        110
FPC 2 EA5_HMC0 Logic die                    79    89      103      103      110
   110        115
FPC 2 EA5_HMC0 DRAM botm                    74    84       98       98      105
   105        110
FPC 2 EA5_HMC1 Logic die                    79    89      103      103      110
   110        115
FPC 2 EA5_HMC1 DRAM botm                    74    84       98       98      105
   105        110
FPC 2 EA5_HMC2 Logic die                    79    89      103      103      110
   110        115
FPC 2 EA5_HMC2 DRAM botm                    74    84       98       98      105
   105        110
FPC 3 Intake-A Temp Sensor                  52    62       72       72       85
    85         90
FPC 3 Exhaust-A Temp Sensor                 75    85       98       98      103
   103        108
FPC 3 Exhaust-B Temp Sensor                 75    85       98       98      103
```

```
   103         108
FPC 3 EA0 Temp Sensor                    62    72        90        90       100
   100         105
FPC 3 EA0_XR0 Temp Sensor                77    87       100       100       105
   105         108
FPC 3 EA0_XR1 Temp Sensor                77    87       100       100       105
   105         108
FPC 3 EA1 Temp Sensor                    62    72        90        90       100
   100         105
FPC 3 EA1_XR0 Temp Sensor                77    87       100       100       105
   105         108
FPC 3 EA1_XR1 Temp Sensor                77    87       100       100       105
   105         108
FPC 3 EA2 Temp Sensor                    62    72        90        90       100
   100         105
FPC 3 EA2_XR0 Temp Sensor                77    87       100       100       105
   105         108
FPC 3 EA2_XR1 Temp Sensor                77    87       100       100       105
   105         108
FPC 3 EA3 Temp Sensor                    62    72        90        90       100
   100         105
FPC 3 EA3_XR0 Temp Sensor                77    87       100       100       105
   105         108
FPC 3 EA3_XR1 Temp Sensor                77    87       100       100       105
   105         108
FPC 3 EA4 Temp Sensor                    62    72        90        90       100
   100         105
FPC 3 EA4_XR0 Temp Sensor                77    87       100       100       105
   105         108
FPC 3 EA4_XR1 Temp Sensor                77    87       100       100       105
   105         108
FPC 3 EA5 Temp Sensor                    62    72        90        90       100
   100         105
FPC 3 EA5_XR0 Temp Sensor                77    87       100       100       105
   105         108
FPC 3 EA5_XR1 Temp Sensor                77    87       100       100       105
   105         108
FPC 3 EA0_HMC0 Logic die                 79    89       103       103       110
   110         115
FPC 3 EA0_HMC0 DRAM botm                 74    84        98        98       105
   105         110
FPC 3 EA0_HMC1 Logic die                 79    89       103       103       110
   110         115
FPC 3 EA0_HMC1 DRAM botm                 74    84        98        98       105
   105         110
FPC 3 EA0_HMC2 Logic die                 79    89       103       103       110
   110         115
FPC 3 EA0_HMC2 DRAM botm                 74    84        98        98       105
   105         110
FPC 3 EA1_HMC0 Logic die                 79    89       103       103       110
   110         115
FPC 3 EA1_HMC0 DRAM botm                 74    84        98        98       105
   105         110
FPC 3 EA1_HMC1 Logic die                 79    89       103       103       110
   110         115
FPC 3 EA1_HMC1 DRAM botm                 74    84        98        98       105
   105         110
FPC 3 EA1_HMC2 Logic die                 79    89       103       103       110
   110         115
FPC 3 EA1_HMC2 DRAM botm                 74    84        98        98       105
   105         110
```

```
FPC 3 EA2_HMC0 Logic die                    79    89      103      103      110
   110        115
FPC 3 EA2_HMC0 DRAM botm                    74    84       98       98      105
   105        110
FPC 3 EA2_HMC1 Logic die                    79    89      103      103      110
   110        115
FPC 3 EA2_HMC1 DRAM botm                    74    84       98       98      105
   105        110
FPC 3 EA2_HMC2 Logic die                    79    89      103      103      110
   110        115
FPC 3 EA2_HMC2 DRAM botm                    74    84       98       98      105
   105        110
FPC 3 EA3_HMC0 Logic die                    79    89      103      103      110
   110        115
FPC 3 EA3_HMC0 DRAM botm                    74    84       98       98      105
   105        110
FPC 3 EA3_HMC1 Logic die                    79    89      103      103      110
   110        115
FPC 3 EA3_HMC1 DRAM botm                    74    84       98       98      105
   105        110
FPC 3 EA3_HMC2 Logic die                    79    89      103      103      110
   110        115
FPC 3 EA3_HMC2 DRAM botm                    74    84       98       98      105
   105        110
FPC 3 EA4_HMC0 Logic die                    79    89      103      103      110
   110        115
FPC 3 EA4_HMC0 DRAM botm                    74    84       98       98      105
   105        110
FPC 3 EA4_HMC1 Logic die                    79    89      103      103      110
   110        115
FPC 3 EA4_HMC1 DRAM botm                    74    84       98       98      105
   105        110
FPC 3 EA4_HMC2 Logic die                    79    89      103      103      110
   110        115
FPC 3 EA4_HMC2 DRAM botm                    74    84       98       98      105
   105        110
FPC 3 EA5_HMC0 Logic die                    79    89      103      103      110
   110        115
FPC 3 EA5_HMC0 DRAM botm                    74    84       98       98      105
   105        110
FPC 3 EA5_HMC1 Logic die                    79    89      103      103      110
   110        115
FPC 3 EA5_HMC1 DRAM botm                    74    84       98       98      105
   105        110
FPC 3 EA5_HMC2 Logic die                    79    89      103      103      110
   110        115
FPC 3 EA5_HMC2 DRAM botm                    74    84       98       98      105
   105        110
SFB 0 Intake-A                              65    75       85       85       95
    95        105
SFB 0 Intake-B                              65    75       85       85       95
    95        105
SFB 0 Exhaust-A                             75    85       95       95       95
    95        105
SFB 0 Exhaust-B                             75    85       95       95       95
    95        105
SFB 0 PF0                                   65    75      100      100      105
   105        115
SFB 0 PF1                                   65    75      100      100      105
   105        115
SFB 1 Intake-A                              65    75       85       85       95
```

```
    95        105
SFB 1 Intake-B                          65    75        85        85        95
    95        105
SFB 1 Exhaust-A                         75    85        95        95        95
    95        105
SFB 1 Exhaust-B                         75    85        95        95        95
    95        105
SFB 1 PF0                               65    75       100       100       105
   105        115
SFB 1 PF1                               65    75       100       100       105
   105        115
SFB 2 Intake-A                          65    75        85        85        95
    95        105
SFB 2 Intake-B                          65    75        85        85        95
    95        105
SFB 2 Exhaust-A                         75    85        95        95        95
    95        105
SFB 2 Exhaust-B                         75    85        95        95        95
    95        105
SFB 2 PF0                               65    75       100       100       105
   105        115
SFB 2 PF1                               65    75       100       100       105
   105        115
SFB 3 Intake-A                          65    75        85        85        95
    95        105
SFB 3 Intake-B                          65    75        85        85        95
    95        105
SFB 3 Exhaust-A                         75    85        95        95        95
    95        105
SFB 3 Exhaust-B                         75    85        95        95        95
    95        105
SFB 3 PF0                               65    75       100       100       105
   105        115
SFB 3 PF1                               65    75       100       100       105
   105        115
SFB 4 Intake-A                          65    75        85        85        95
    95        105
SFB 4 Intake-B                          65    75        85        85        95
    95        105
SFB 4 Exhaust-A                         75    85        95        95        95
    95        105
SFB 4 Exhaust-B                         75    85        95        95        95
    95        105
SFB 4 PF0                               65    75       100       100       105
   105        115
SFB 4 PF1                               65    75       100       100       105
   105        115
SFB 5 Intake-A                          65    75        85        85        95
    95        105
SFB 5 Intake-B                          65    75        85        85        95
    95        105
SFB 5 Exhaust-A                         75    85        95        95        95
    95        105
SFB 5 Exhaust-B                         75    85        95        95        95
    95        105
SFB 5 PF0                               65    75       100       100       105
   105        115
SFB 5 PF1                               65    75       100       100       105
   105        115
```

show chassis temperature-thresholds (MX204 Router)

```
user@host> show chassis temperature-thresholds

                                        Fan speed      Yellow alarm      Red alarm
      Fire Shutdown
                                        (degrees C)      (degrees C)     (degrees
 C)      (degrees C)
Item                                   Normal  High   Normal  Bad fan   Normal
Bad fan     Normal
Routing Engine                             48    54       85       85      100
   100        102
CB Top Right Inlet Sensor                  35    40       63       63       85
    85         95
CB Top Left Inlet Sensor                   40    45       65       65       85
    85         95
CB Top Right Exhaust Sensor                45    50       68       68       85
    85         95
CB Top Left Exhaust Sensor                 65    70       78       78       85
    85         95
CB CPU Core-0 Temp                         65    70       80       80       90
    90        100
CB CPU Core-1 Temp                         65    70       80       80       90
    90        100
CB CPU Core-2 Temp                         65    70       80       80       90
    90        100
CB CPU Core-3 Temp                         65    70       80       80       90
    90        100
CB CPU Core-4 Temp                         65    70       80       80       90
    90        100
CB CPU Core-5 Temp                         65    70       80       80       90
    90        100
CB CPU Core-6 Temp                         65    70       80       80       90
    90        100
CB CPU Core-7 Temp                         65    70       80       80       90
    90        100
FPC EA0_HMC0 Logic die                     85    90       95       95      105
   105        110
FPC EA0_HMC0 DRAM botm                     80    85       90       90      105
   105        110
FPC EA0_HMC1 Logic die                     85    90       95       95      105
   105        110
FPC EA0_HMC1 DRAM botm                     80    85       90       90      105
   105        110
FPC EA0 Chip                               92    97      103      103      109
   109        115
FPC EA0-XR0 Chip                           85    90       98       98      103
   103        110
FPC EA0-XR1 Chip                           85    90       98       98      103
   103        110
```

show chassis temperature-thresholds (PTX10008 Routers)

```
user@host> show chassis temperature-thresholds
                            Fan speed      Yellow alarm      Red alarm      Fire
Shutdown
                           (degrees C)      (degrees C)     (degrees C)
(degrees C)
Item                      Normal  High   Normal  Bad fan   Normal  Bad fan
Normal
```

```
Routing Engine 0             48    54       85       85      100      100
102
Routing Engine 1             48    54       85       85      100      100
102
CB 0 Intake Temp Sensor      30    35       80       80       85       85
95
CB 0 Exhaust Temp Sensor     30    35       80       80       85       85
95
CB 0 CPU Die Temp Sensor     40    45       95       95      100      100
110
CB 1 Intake Temp Sensor      30    35       80       80       85       85
95
CB 1 Exhaust Temp Sensor     30    35       80       80       85       85
95
CB 1 CPU Die Temp Sensor     40    45       95       95      100      100
110
FPC 0 Intake-A Temp Sensor   30    35       80       80       85       85
95
FPC 0 Intake-B Temp Sensor   30    35       80       80       85       85
95
FPC 0 Exhaust-A Temp Sensor   30   35       80       80       85       85
95
FPC 0 Exhaust-B Temp Sensor   30   35       80       80       85       85
95
FPC 0 Exhaust-C Temp Sensor   30   35       80       80       85       85
95
FPC 0 PE0 Temp Sensor        40    45      100      100      105      105
115
FPC 0 PE1 Temp Sensor        40    45      100      100      105      105
115
FPC 0 PE2 Temp Sensor        40    45      100      100      105      105
115
FPC 0 LCPU Temp Sensor       40    45       95       95      100      100
110
FPC 5 Intake-A Temp Sensor   30    35       80       80       85       85
95
FPC 5 Intake-B Temp Sensor   30    35       80       80       85       85
95
FPC 5 Exhaust-A Temp Sensor   30   35       80       80       85       85
95
FPC 5 Exhaust-B Temp Sensor   30   35       80       80       85       85
95
FPC 5 Exhaust-C Temp Sensor   30   35       80       80       85       85
95
FPC 5 PE0 Temp Sensor        40    45      100      100      105      105
115
FPC 5 PE1 Temp Sensor        40    45      100      100      105      105
115
FPC 5 PE2 Temp Sensor        40    45      100      100      105      105
115
FPC 5 PE3 Temp Sensor        40    45      100      100      105      105
115
FPC 5 PE4 Temp Sensor        40    45      100      100      105      105
115
FPC 5 PE5 Temp Sensor        40    45      100      100      105      105
115
FPC 5 LCPU Temp Sensor       40    45       95       95      100      100
110
FPC 6 Intake-A Temp Sensor   30    35       80       80       85       85
95
FPC 6 Intake-B Temp Sensor   30    35       80       80       85       85
```

```
95
FPC 6 Exhaust-A Temp Sensor   30   35       80       80       85       85
95
FPC 6 Exhaust-B Temp Sensor   30   35       80       80       85       85
95
FPC 6 Exhaust-C Temp Sensor   30   35       80       80       85       85
95
FPC 6 PE0 Temp Sensor        40   45      100      100      105      105
115
FPC 6 PE1 Temp Sensor        40   45      100      100      105      105
115
FPC 6 PE2 Temp Sensor        40   45      100      100      105      105
115
FPC 6 PE3 Temp Sensor        40   45      100      100      105      105
115
FPC 6 PE4 Temp Sensor        40   45      100      100      105      105
115
FPC 6 PE5 Temp Sensor        40   45      100      100      105      105
115
FPC 6 LCPU Temp Sensor       40   45       95       95      100      100
110
SIB 0 Intake-A Temp Sensor   40   45       90       90       95       95
105
SIB 0 Intake-B Temp Sensor   40   45       90       90       95       95
105
SIB 0 Exhaust-A Temp Sensor   40   45       90       90       95       95
105
SIB 0 Exhaust-B Temp Sensor   40   45       90       90       95       95
105
SIB 0 PF0 Temp Sensor        50   55      100      100      105      105
115
SIB 0 PF1 Temp Sensor        50   55      100      100      105      105
115
SIB 1 Intake-A Temp Sensor   40   45       90       90       95       95
105
SIB 1 Intake-B Temp Sensor   40   45       90       90       95       95
105
SIB 1 Exhaust-A Temp Sensor   40   45       90       90       95       95
105
SIB 1 Exhaust-B Temp Sensor   40   45       90       90       95       95
105
SIB 1 PF0 Temp Sensor        50   55      100      100      105      105
115
SIB 1 PF1 Temp Sensor        50   55      100      100      105      105
115
```

show chassis temperature-thresholds (T4000 Core Routers)

```
user@host> show chassis temperature-thresholds

                     Fan speed      Yellow alarm       Red alarm   Fire Shutdown

                    (degrees C)      (degrees C)      (degrees C)    (degrees C)
Item                Normal  High    Normal  Bad fan  Normal  Bad fan     Normal
Chassis default        48    54       65       55       75       65       100
Routing Engine 0       55    65       85       85      100      100       102
Routing Engine 1       55    65       85       85      100      100       102
FPC 0                  63    68       75       70       90       83        95
FPC 3                  63    68       75       70       90       83        95
FPC 5                  56    62       75       63       83       76        95
FPC 6                  63    68       75       70       90       83        95
```

```
SIB 0                    64     70        76        72        87        84        95
SIB 1                    64     70        76        72        87        84        95
SIB 2                    64     70        76        72        87        84        95
SIB 3                    64     70        76        72        87        84        95
SIB 4                    64     70        76        72        87        84        95
```

show chassis temperature-thresholds (TX Matrix Plus Router)

```
user@host> show chassis temperature-thresholds
sfc0-re0:
--------------------------------------------------------------------------
                          Fan speed        Yellow alarm         Red alarm
                         (degrees C)        (degrees C)        (degrees C)
Item                    Normal   High     Normal   Bad fan    Normal   Bad fan
Chassis default             48     54        65        55        75        65
Routing Engine 0            55     65        85        85       100       100
Routing Engine 1            55     65        85        85       100       100
SIB F13 0                   64     70        76        72        90        84
SIB F13 3                   64     70        76        72        90        84
SIB F13 6                   64     70        76        72        90        84
SIB F13 8                   64     70        76        72        90        84
SIB F13 11                  64     70        76        72        90        84
SIB F13 12                  64     70        76        72        90        84
SIB F2S 16                  64     70        76        72        90        84
SIB F2S 17                  64     70        76        72        90        84
SIB F2S 18                  64     70        76        72        90        84
SIB F2S 19                  64     70        76        72        90        84
SIB F2S 20                  64     70        76        72        90        84
SIB F2S 21                  64     70        76        72        90        84
SIB F2S 22                  64     70        76        72        90        84
SIB F2S 23                  64     70        76        72        90        84
SIB F2S 24                  64     70        76        72        90        84
SIB F2S 25                  64     70        76        72        90        84
SIB F2S 26                  64     70        76        72        90        84
SIB F2S 27                  64     70        76        72        90        84
SIB F2S 28                  64     70        76        72        90        84
SIB F2S 29                  64     70        76        72        90        84
SIB F2S 30                  64     70        76        72        90        84
SIB F2S 31                  64     70        76        72        90        84
SIB F2S 32                  64     70        76        72        90        84
SIB F2S 33                  64     70        76        72        90        84
SIB F2S 34                  64     70        76        72        90        84
SIB F2S 35                  64     70        76        72        90        84

lcc0-re0:
--------------------------------------------------------------------------
                          Fan speed        Yellow alarm         Red alarm
                         (degrees C)        (degrees C)        (degrees C)
Item                    Normal   High     Normal   Bad fan    Normal   Bad fan
Chassis default             48     54        65        55        75        65
Routing Engine 0            55     65        85        85       100       100
Routing Engine 1            55     65        85        85       100       100
FPC 1                       56     62        75        63        83        76
FPC 3                       56     62        75        63        83        76
FPC 4                       56     62        75        63        83        76
FPC 6                       56     62        75        63        83        76
FPC 7                       56     62        75        63        83        76
SIB 0                       48     54        65        60        80        75
SIB 1                       48     54        65        60        80        75
SIB 2                       48     54        65        60        80        75
SIB 3                       48     54        65        60        80        75
```

```
SIB 4                        48     54        65        60        80        75

lcc1-re0:
--------------------------------------------------------------------------
                          Fan speed        Yellow alarm         Red alarm
                         (degrees C)        (degrees C)        (degrees C)
Item                    Normal   High    Normal   Bad fan    Normal   Bad fan
Chassis default             48     54        65        55        75        65
Routing Engine 0            55     65        85        85       100       100
Routing Engine 1            55     65        85        85       100       100
FPC 1                       56     62        75        63        83        76
FPC 3                       56     62        75        63        83        76
FPC 4                       56     62        75        63        83        76
FPC 6                       56     62        75        63        83        76
...
```

show chassis temperature-thresholds lcc (TX Matrix Plus Router)

```
user@host> show chassis temperature-thresholds lcc 1
lcc1-re0:
--------------------------------------------------------------------------
                          Fan speed        Yellow alarm         Red alarm
                         (degrees C)        (degrees C)        (degrees C)
Item                    Normal   High    Normal   Bad fan    Normal   Bad fan
Chassis default             48     54        65        55        75        65
Routing Engine 0            55     65        85        85       100       100
Routing Engine 1            55     65        85        85       100       100
FPC 1                       56     62        75        63        83        76
FPC 3                       56     62        75        63        83        76
FPC 4                       56     62        75        63        83        76
FPC 6                       56     62        75        63        83        76
SIB 0                       48     54        65        60        80        75
SIB 1                       48     54        65        60        80        75
SIB 2                       48     54        65        60        80        75
SIB 3                       48     54        65        60        80        75
SIB 4                       48     54        65        60        80        75
```

show chassis temperature-thresholds sfc (TX Matrix Plus Router)

```
user@host> show chassis temperature-thresholds sfc 0
sfc0-re0:
--------------------------------------------------------------------------
                          Fan speed        Yellow alarm         Red alarm
                         (degrees C)        (degrees C)        (degrees C)
Item                    Normal   High    Normal   Bad fan    Normal   Bad fan
Chassis default             48     54        65        55        75        65
Routing Engine 0            55     65        85        85       100       100
Routing Engine 1            55     65        85        85       100       100
SIB F13 0                   64     70        76        72        90        84
SIB F13 3                   64     70        76        72        90        84
SIB F13 6                   64     70        76        72        90        84
SIB F13 8                   64     70        76        72        90        84
SIB F13 11                  64     70        76        72        90        84
SIB F13 12                  64     70        76        72        90        84
SIB F2S 16                  64     70        76        72        90        84
SIB F2S 17                  64     70        76        72        90        84
SIB F2S 18                  64     70        76        72        90        84
SIB F2S 19                  64     70        76        72        90        84
SIB F2S 20                  64     70        76        72        90        84
SIB F2S 21                  64     70        76        72        90        84
```

```
SIB F2S 22                    64     70        76        72        90        84
SIB F2S 23                    64     70        76        72        90        84
SIB F2S 24                    64     70        76        72        90        84
SIB F2S 25                    64     70        76        72        90        84
SIB F2S 26                    64     70        76        72        90        84
SIB F2S 27                    64     70        76        72        90        84
SIB F2S 28                    64     70        76        72        90        84
SIB F2S 29                    64     70        76        72        90        84
SIB F2S 30                    64     70        76        72        90        84
SIB F2S 31                    64     70        76        72        90        84
SIB F2S 32                    64     70        76        72        90        84
SIB F2S 33                    64     70        76        72        90        84
SIB F2S 34                    64     70        76        72        90        84
SIB F2S 35                    64     70        76        72        90        84
```

show chassis temperature-thresholds (TX Matrix Plus routers with 3D SIBs)

```
user@host> show chassis temperature-thresholds
sfc0-re0:
--------------------------------------------------------------------------
                          Fan speed      Yellow alarm      Red alarm      Fire
Shutdown
                         (degrees C)      (degrees C)     (degrees C)
(degrees C)
Item                    Normal  High   Normal  Bad fan   Normal  Bad fan
Normal
Chassis default             48    54       65       55       75       65
100
Routing Engine 0            70    75       90       87      102       97
115
Routing Engine 1            70    75       90       87      102       97
115
SIB F13 0 Board             60    65       78       75       85       80
95
SIB F13 0 XF Junction       70    75       82       74      105      100
107
SIB F13 4 Board             60    65       78       75       85       80
95
SIB F13 4 XF Junction       70    75       82       74      105      100
107
SIB F13 6 Board             60    65       78       75       85       80
95
SIB F13 6 XF Junction       70    75       82       74      105      100
107
SIB F2S 16 Board            60    65       78       75       85       80
95
SIB F2S 16 XF Junction      70    75       82       74      105      100
107
SIB F2S 17 Board            60    65       78       75       85       80
95
SIB F2S 17 XF Junction      70    75       82       74      105      100
107
SIB F2S 18 Board            60    65       78       75       85       80
95
SIB F2S 18 XF Junction      70    75       82       74      105      100
107
SIB F2S 19 Board            60    65       78       75       85       80
95
SIB F2S 19 XF Junction      70    75       82       74      105      100
107
SIB F2S 24 Board            60    65       78       75       85       80
```

```
95
SIB F2S 24 XF Junction       70    75       82       74      105      100
107
SIB F2S 25 Board             60    65       78       75       85       80
95
SIB F2S 25 XF Junction       70    75       82       74      105      100
107
SIB F2S 26 Board             60    65       78       75       85       80
95
SIB F2S 26 XF Junction       70    75       82       74      105      100
107
SIB F2S 27 Board             60    65       78       75       85       80
95
SIB F2S 27 XF Junction       70    75       82       74      105      100
107

lcc0-re0:
--------------------------------------------------------------------------
                           Fan speed      Yellow alarm      Red alarm      Fire
Shutdown
                          (degrees C)      (degrees C)     (degrees C)
(degrees C)
Item                     Normal  High   Normal  Bad fan   Normal  Bad fan
Normal
Chassis default              48    54       65       55       75       65
100
Routing Engine 0             55    65       85       85      100      100
102
FPC 0                        63    68       75       70       90       83
95
FPC 1                        56    62       75       63       83       76
95
FPC 7                        56    62       75       63       83       76
95
SIB 0                        64    70       76       72       87       84
95
SIB 0 ASIC Junction          63    68       75       70      105      100
107
SIB 2                        64    70       76       72       87       84
95
SIB 2 ASIC Junction          63    68       75       70      105      100
107
SIB 3                        64    70       76       72       87       84
95
SIB 3 ASIC Junction          63    68       75       70      105      100
107
```

show chassis temperature-thresholds (QFX3500 Switch and QFX3600)

```
user@switch> show chassis temperature-thresholds
                           Fan speed      Yellow alarm      Red alarm
                          (degrees C)      (degrees C)     (degrees C)
Item                     Normal  High   Normal  Bad fan   Normal  Bad fan
rmal
FPC Sensor TopLeft I         48    56       53       43       56       46
FPC Sensor TopRight I        46    54       51       41       54       44
FPC Sensor TopLeft E         58    65       62       52       65       55
FPC Sensor TopRight E        56    64       61       51       64       54
FPC Sensor TopMiddle I       58    64       61       51       64       54
FPC Sensor TopMiddle E       67    74       71       61       74       64
FPC Sensor Bottom I          59    67       64       54       67       57
```

```
FPC Sensor Bottom E          66    73       70       60       73       63
FPC Sensor Die Temp          69    75       72       62       75       65
FPC Sensor Mgmnt Brd I       46    54       51       41       54       44
FPC Sensor Switch I          56    63       60       50       63       53
```

show chassis temperature-thresholds interconnect-device (QFabric System)

```
user@switch> show chassis temperature-thresholds interconnect-device interconnect1
temperature-thresholds interconnect-device interconnect1
                            Fan speed        Yellow alarm         Red alarm
Item                      Normal   High    Normal   Bad fan    Normal   Bad fan
Chassis default               48     54        65        55        75        65
```

show chassis temperature-thresholds (PTX5000 Packet Transport Router)

```
user@switch> show chassis temperature-thresholds
user@switch> show chassis temperature-thresholds

                            Fan speed      Yellow alarm      Red alarm      Fire
Shutdown
                           (degrees C)      (degrees C)     (degrees C)
(degrees C)
Item                      Normal  High   Normal  Bad fan   Normal  Bad fan
Normal
Routing Engine 0              80    90       95       85      105       95
115
CB 0 Exhaust A                60    65       78       75       85       80
95
CB 0 Exhaust B                60    65       78       75       85       80
95
CB 1 Exhaust A                60    65       78       75       85       80
95
CB 1 Exhaust B                60    65       78       75       85       80
95
FPC 3 Exhaust A               80    90       95       85      105       95
115
FPC 3 Exhaust B               80    90       95       85      105       95
115
FPC 3 TL5                     80    90       95       85      105       95
115
FPC 3 TQ5                     80    90       95       85      105       95
115
FPC 3 TL6                     80    90       95       85      105       95
115
FPC 3 TQ6                     80    90       95       85      105       95
115
FPC 3 TL1                     80    90       95       85      105       95
115
FPC 3 TQ1                     80    90       95       85      105       95
115
FPC 3 TL2                     80    90       95       85      105       95
115
FPC 3 TQ2                     80    90       95       85      105       95
115
FPC 3 TL4                     80    90       95       85      105       95
115
FPC 3 TQ4                     80    90       95       85      105       95
115
FPC 3 TL7                     80    90       95       85      105       95
115
```

```
FPC 3 TQ7                    80     90        95        85       105        95
115
FPC 3 TL0                    80     90        95        85       105        95
115
FPC 3 TQ0                    80     90        95        85       105        95
115
FPC 3 TL3                    80     90        95        85       105        95
115
FPC 3 TQ3                    80     90        95        85       105        95
115
SIB 0 Exhaust                60     65        78        75        85        80
95
SIB 0 Junction               75     80        90        85       105        95
115
SIB 1 Exhaust                60     65        78        75        85        80
95
SIB 1 Junction               75     80        90        85       105        95
115
SIB 2 Exhaust                60     65        78        75        85        80
95
SIB 2 Junction               75     80        90        85       105        95
115
SIB 3 Exhaust                60     65        78        75        85        80
95
SIB 3 Junction               75     80        90        85       105        95
115
SIB 4 Exhaust                60     65        78        75        85        80
95
SIB 4 Junction               75     80        90        85       105        95
115
SIB 5 Exhaust                60     65        78        75        85        80
95
SIB 5 Junction               75     80        90        85       105        95
115
SIB 6 Exhaust                60     65        78        75        85        80
95
SIB 6 Junction               75     80        90        85       105        95
115
SIB 7 Exhaust                60     65        78        75        85        80
95
SIB 7 Junction               75     80        90        85       105        95
115
SIB 8 Exhaust                60     65        78        75        85        80
95
SIB 8 Junction               75     80        90        85       105        95
115
```

show chassis temperature-thresholds (PTX1000 Packet Transport Router)

```
user@host> show chassis temperature-thresholds

                            Fan speed      Yellow alarm      Red alarm      Fire
Shutdown
                           (degrees C)      (degrees C)     (degrees C)
(degrees C)
Item                      Normal  High   Normal  Bad fan   Normal  Bad fan
Normal
FPC 0 Intake Temp Sensor     30     65       65       65       70       70
75
```

```
FPC 0 Exhaust Temp Sensor    30    65       65       65       70       70
75
FPC 0 Mezz Temp Sensor 0     30    65       65       65       70       70
75
FPC 0 Mezz Temp Sensor 1     30    65       65       65       70       70
75
FPC 0 PE2 Temp Sensor        50    90       90       90      100      100
103
FPC 0 PE1 Temp Sensor        50    90       90       90      100      100
103
FPC 0 PF0 Temp Sensor        50    90       90       90      100      100
103
FPC 0 PE0 Temp Sensor        50    90       90       90      100      100
103
FPC 0 PE5 Temp Sensor        50    90       90       90      100      100
103
FPC 0 PE4 Temp Sensor        50    90       90       90      100      100
103
FPC 0 PF1 Temp Sensor        50    90       90       90      100      100
103
FPC 0 PE3 Temp Sensor        50    90       90       90      100      100
103
FPC 0 CPU Die Temp Sensor    50    90       90       90      100      100
103
FPC 0 OCXO Temp Sensor       50    90       90       90      100      100
103
```

show chassis temperature-thresholds (MX Routers with Media Services Blade [MSB])

```
user@switch> show chassis temperature-thresholds
  Fan speed      Yellow alarm      Red alarm      Fire Shutdown
                          (degrees C)      (degrees C)     (degrees C)
(degrees C)
Item                     Normal  High   Normal  Bad fan   Normal  Bad fan
Normal
Chassis default              48    54       65       55       75       65
100
Routing Engine 0             70    80       95       95      110      110
112
Routing Engine 1             70    80       95       95      110      110
112
FPC 0                        55    60       75       65       90       80
95
FPC 1                        55    60       75       65       90       80
95
FPC 2                        55    60       75       65       90       80
95
FPC 4                        55    60       75       65       90       80
95
FPC 5                        55    60       75       65       90       80
95
```

show chassis temperature-thresholds (EX9251 Switches)

```
user@switch> show chassis temperature-thresholds

                          Fan speed      Yellow alarm      Red alarm      Fire
Shutdown
```

```
                          (degrees C)      (degrees C)     (degrees C)
(degrees C)
Item                    Normal  High   Normal  Bad fan   Normal  Bad fan
Normal
Routing Engine                           48    54       85       85      100
   100        102
CB Top Right Inlet Sensor                35    40       63       63       85
    85         95
CB Top Left Inlet Sensor                 40    45       65       65       85
    85         95
CB Top Right Exhaust Sensor              45    50       68       68       85
    85         95
CB Top Left Exhaust Sensor               65    70       78       78       85
    85         95
CB CPU Core-0 Temp                       65    70       80       80       90
    90        100
CB CPU Core-1 Temp                       65    70       80       80       90
    90        100
CB CPU Core-2 Temp                       65    70       80       80       90
    90        100
CB CPU Core-3 Temp                       65    70       80       80       90
    90        100
CB CPU Core-4 Temp                       65    70       80       80       90
    90        100
CB CPU Core-5 Temp                       65    70       80       80       90
    90        100
CB CPU Core-6 Temp                       65    70       80       80       90
    90        100
CB CPU Core-7 Temp                       65    70       80       80       90
    90        100
FPC EA0_HMC0 Logic die                   85    90       95       95      105
   105        110
FPC EA0_HMC0 DRAM botm                   80    85       90       90      105
   105        110
FPC EA0_HMC1 Logic die                   85    90       95       95      105
   105        110
FPC EA0_HMC1 DRAM botm                   80    85       90       90      105
   105        110
FPC EA0 Chip                             92    97      103      103      109
   109        115
FPC EA0-XR0 Chip                         85    90       98       98      103
   103        110
FPC EA0-XR1 Chip                         85    90       98       98      103
   103        110
```

show chassis temperature-thresholds (EX9253 witches)

```
user@switch> show chassis temperature-thresholds

                          Fan speed      Yellow alarm      Red alarm      Fire
Shutdown
                          (degrees C)      (degrees C)     (degrees C)
(degrees C)
Item                    Normal  High   Normal  Bad fan   Normal  Bad fan
Normal
Routing Engine 0                         48    54       85       85      100
   100        102
CB 0 Exhaust Temp Sensor                 60    65       75       75       85
    85         95
CB 0 Inlet Temp Sensor                   60    65       75       75       85
    85         95
```

```
CB 0 CPU DIE Temp Sensor                  83    90       98       98      105
   105        110
CB 1 Exhaust Temp Sensor                  60    65       75       75       85
    85         95
CB 1 Inlet Temp Sensor                    60    65       75       75       85
    85         95
CB 1 CPU DIE Temp Sensor                  83    90       98       98      105
   105        110
FPC 0 Intake Temp Sensor                  40    45       75       70       85
    80         95
FPC 0 Exhaust-A Temp Sensor               55    60       85       80       90
    90        100
FPC 0 Exhaust-B Temp Sensor               55    60       85       80       90
    90        100
FPC 0 EA0 Chip                            87    92       97       97      105
   105        110
FPC 0 EA0-XR0 Chip                        88    93       98       98      120
   120        125
FPC 0 EA0-XR1 Chip                        88    93       98       98      120
   120        125
FPC 0 EA1 Chip                            87    92       97       97      105
   105        110
FPC 0 EA1-XR0 Chip                        88    93       98       98      120
   120        125
FPC 0 EA1-XR1 Chip                        88    93       98       98      120
   120        125
FPC 0 EA2 Chip                            87    92       97       97      105
   105        110
FPC 0 EA2-XR0 Chip                        88    93       98       98      120
   120        125
FPC 0 EA2-XR1 Chip                        88    93       98       98      120
   120        125
FPC 0 PF Chip                             89    94      104      104      120
   120        120
FPC 0 EA0_HMC0 Logic die                  88    93      103      103      120
   120        125
FPC 0 EA0_HMC0 DRAM botm                  83    88       98       98      120
   120        125
FPC 0 EA0_HMC1 Logic die                  88    93      103      103      120
   120        125
FPC 0 EA0_HMC1 DRAM botm                  83    88       98       98      120
   120        125
FPC 0 EA0_HMC2 Logic die                  88    93      103      103      120
   120        125
FPC 0 EA0_HMC2 DRAM botm                  83    88       98       98      120
   120        125
FPC 0 EA1_HMC0 Logic die                  88    93      103      103      120
   120        125
FPC 0 EA1_HMC0 DRAM botm                  83    88       98       98      120
   120        125
FPC 0 EA1_HMC1 Logic die                  88    93      103      103      120
   120        125
FPC 0 EA1_HMC1 DRAM botm                  83    88       98       98      120
   120        125
FPC 0 EA1_HMC2 Logic die                  88    93      103      103      120
   120        125
FPC 0 EA1_HMC2 DRAM botm                  83    88       98       98      120
   120        125
FPC 0 EA2_HMC0 Logic die                  88    93      103      103      120
   120        125
FPC 0 EA2_HMC0 DRAM botm                  83    88       98       98      120
```

```
   120        125
FPC 0 EA2_HMC1 Logic die                88    93      103      103      120
   120        125
FPC 0 EA2_HMC1 DRAM botm                83    88       98       98      120
   120        125
FPC 0 EA2_HMC2 Logic die                88    93      103      103      120
   120        125
FPC 0 EA2_HMC2 DRAM botm                83    88       98       98      120
   120        125
FPC 1 Intake Temp Sensor                40    45       75       70       85
    80         95
FPC 1 Exhaust-A Temp Sensor             55    60       85       80       90
    90        100
FPC 1 Exhaust-B Temp Sensor             55    60       85       80       90
    90        100
FPC 1 EA0 Chip                          87    92       97       97      105
   105        110
FPC 1 EA0-XR0 Chip                      88    93       98       98      120
   120        125
FPC 1 EA0-XR1 Chip                      88    93       98       98      120
   120        125
FPC 1 EA1 Chip                          87    92       97       97      105
   105        110
FPC 1 EA1-XR0 Chip                      88    93       98       98      120
   120        125
FPC 1 EA1-XR1 Chip                      88    93       98       98      120
   120        125
FPC 1 EA2 Chip                          87    92       97       97      105
   105        110
FPC 1 EA2-XR0 Chip                      88    93       98       98      120
   120        125
FPC 1 EA2-XR1 Chip                      88    93       98       98      120
   120        125
FPC 1 PF Chip                           89    94      104      104      120
   120        120
FPC 1 EA0_HMC0 Logic die                88    93      103      103      120
   120        125
FPC 1 EA0_HMC0 DRAM botm                83    88       98       98      120
   120        125
FPC 1 EA0_HMC1 Logic die                88    93      103      103      120
   120        125
FPC 1 EA0_HMC1 DRAM botm                83    88       98       98      120
   120        125
FPC 1 EA0_HMC2 Logic die                88    93      103      103      120
   120        125
FPC 1 EA0_HMC2 DRAM botm                83    88       98       98      120
   120        125
FPC 1 EA1_HMC0 Logic die                88    93      103      103      120
   120        125
FPC 1 EA1_HMC0 DRAM botm                83    88       98       98      120
   120        125
FPC 1 EA1_HMC1 Logic die                88    93      103      103      120
   120        125
FPC 1 EA1_HMC1 DRAM botm                83    88       98       98      120
   120        125
FPC 1 EA1_HMC2 Logic die                88    93      103      103      120
   120        125
FPC 1 EA1_HMC2 DRAM botm                83    88       98       98      120
   120        125
FPC 1 EA2_HMC0 Logic die                88    93      103      103      120
   120        125
```

```
FPC 1 EA2_HMC0 DRAM botm                  83    88       98       98      120
   120        125
FPC 1 EA2_HMC1 Logic die                  88    93      103      103      120
   120        125
FPC 1 EA2_HMC1 DRAM botm                  83    88       98       98      120
   120        125
FPC 1 EA2_HMC2 Logic die                  88    93      103      103      120
   120        125
FPC 1 EA2_HMC2 DRAM botm                  83    88       98       98      120
   120        125
```

show ethernet-switching table

List of Syntax

Syntax (QFX Series, QFabric, NFX Series and EX4600) on page 770
Syntax (EX Series) on page 770
Syntax (EX Series, MX Series and QFX Series) on page 770
Syntax (SRX Series) on page 770

Syntax (QFX Series, QFabric, NFX Series and EX4600)

show ethernet-switching table
<brief | detail | extensive | summary>
<interface *interface-name*>
<management-vlan>
<sort-by (*name* | *tag*)>
<vlan *vlan-name*>

Syntax (EX Series)

show ethernet-switching table
<brief | detail | extensive | summary>
<interface *interface-name*>
<management-vlan>
<persistent-mac <interface *interface-name*>>
<sort-by (*name* | *tag*)>
<vlan *vlan-name*>

Syntax (EX Series, MX Series and QFX Series)

show ethernet-switching table
<brief | count | detail | extensive | summary>
<*address*>
<instance *instance-name*>
<interface *interface-name*>
isid *isid*
<logical-system *logical-system-name*>
<persistent-learning (interface *interface-name* | mac *mac-address*)>
<*address*>
<vlan-id (all-vlan | *vlan-id*)>
<vlan-name (all | *vlan-name*)>

Syntax (SRX Series)

show ethernet-switching table (brief |detail |extensive) interface *interface-name*

Release Information

Command introduced in Junos OS Release 9.0 for EX Series switches.
Command introduced in Junos OS Release 9.5 for SRX Series.
Options **summary**, **management-vlan**, and **vlan** ***vlan-name*** introduced in Junos OS Release 9.6 for EX Series switches.
Option **sort-by** and field name **tag** introduced in Junos OS Release 10.1 for EX Series switches.
Command introduced in Junos OS Release 11.1 for the QFX Series.
Output for private VLANs introduced in Junos OS Release 12.1 for the QFX Series.
Option **persistent-mac** introduced in Junos OS Release 11.4 for EX Series switches.
Command introduced in Junos OS Release 12.3R2.
Command introduced in Junos OS Release 12.3R2 for EX Series switches.
Options **logical-system**, **persistent-learning**, and **summary** introduced in Junos OS Release 13.2X50-D10 (ELS).

Description Displays the Ethernet switching table.

(MX Series routers,EX Series switches only) Displays Layer 2 MAC address information.

Options For QFX Series, QFabric, NFX Series and EX4600:

none—(Optional) Display brief information about the Ethernet switching table.

brief | detail | extensive | summary—(Optional) Display the specified level of output.

interface *interface-name*—(Optional) Display the Ethernet switching table for a specific interface.

management-vlan—(Optional) Display the Ethernet switching table for a management VLAN.

persistent-mac <interface *interface-name*>—(Optional) Display the persistent MAC addresses learned for all interfaces or a specified interface. You can use this command to view entries that you want to clear for an interface that you intentionally disabled.

sort-by (*name* | *tag*)—(Optional) Display VLANs in ascending order of VLAN IDs or VLAN names.

vlan *vlan-name*—(Optional) Display the Ethernet switching table for a specific VLAN.

For EX Series, MX Series and QFX Series:

none—Display all learned Layer 2 MAC address information.

brief | count | detail | extensive | summary—(Optional) Display the specified level of output.

address—(Optional) Display the specified learned Layer 2 MAC address information.

instance *instance-name*—(Optional) Display learned Layer 2 MAC addresses for the specified routing instance.

interface *interface-name*—(Optional) Display learned Layer 2 MAC addresses for the specified interface.

isid *isid*—(Optional) Display learned Layer 2 MAC addresses for the specified ISID.

logical-system *logical-system-name*—(Optional) Display Ethernet-switching statistics information for the specified logical system.

persistent-learning (interface *interface-name* | mac *mac-address*)—(Optional) Display dynamically learned MAC addresses that are retained despite device restarts and interface failures for a specified interface, or information about a specified MAC address.

vlan-id (all-vlan | *vlan-id*)—(Optional) Display learned Layer 2 MAC addresses for all VLANs or for the specified VLAN.

vlan-name (all | *vlan-name*)—(Optional) Display learned Layer 2 MAC addresses for all VLANs or for the specified VLAN.

For SRX Series:

- **none**—(Optional) Display brief information about the Ethernet switching table.
- **brief | detail | extensive**—(Optional) Display the specified level of output.
- **interface-name**—(Optional) Display the Ethernet switching table for a specific interface.

Additional Information

When Layer 2 protocol tunneling is enabled, the tunneling MAC address 01:00:0c:cd:cd:d0 is installed in the MAC table. When the Cisco Discovery Protocol (CDP), Spanning Tree Protocol (STP), or VLAN Trunk Protocol (VTP) is configured for Layer 2 protocol tunneling on an interface, the corresponding protocol MAC address is installed in the MAC table.

Required Privilege Level

view

Related Documentation

- *Example: Setting Up Basic Bridging and a VLAN on Switches*
- *Example: Setting Up Bridging with Multiple VLANs*
- *Example: Setting Up Basic Bridging and a VLAN for an EX Series Switch*
- *Example: Setting Up Bridging with Multiple VLANs for EX Series Switches*
- *Example: Setting Up Q-in-Q Tunneling on EX Series Switches*
- *clear ethernet-switching table*
- *show ethernet-switching mac-learning-log*

List of Sample Output

show ethernet-switching table extensive (EX Series switches) on page 785
show ethernet-switching table persistent-mac (EX Series switches) on page 785
show ethernet-switching table persistent-mac interface ge-0/0/16.0 (EX Series switches) on page 785
show ethernet-switching table (EX Series, MX Series and QFX Series) on page 785
show ethernet-switching table brief on page 787
show ethernet-switching table count on page 788
show ethernet-switching table extensive on page 789
show ethernet-switching table detail (SRX Series) on page 790
show ethernet-switching table extensive (SRX Series) on page 791
show ethernet-switching table interface ge-0/0/1 (SRX Series) on page 792

Output Fields For QFX Series, QFabric, NFX Series and EX4600:

The following table lists the output fields for the **show ethernet-switching table** command on QFX Series, QFabric, NFX Series and EX4600. Output fields are listed in the approximate order in which they appear.

Table 31: show ethernet-switching table Output Fields

Field Name	Field Description	Level of Output
VLAN	Name of a VLAN.	All levels
MAC address	MAC address associated with the VLAN.	All levels
Type	Type of MAC address: • **static**—The MAC address is manually created. • **learn**—The MAC address is learned dynamically from a packet's source MAC address. • **flood**—The MAC address is unknown and flooded to all members.	All levels
Age	Time remaining before the entry ages out and is removed from the Ethernet switching table.	All levels
Interfaces	Interface associated with learned MAC addresses or with the **All-members** option (flood entry).	All levels
Learned	For learned entries, the time at which the entry was added to the Ethernet switching table.	**detail**, **extensive**

For EX Series switches:

The following table lists the output fields for the **show ethernet-switching table** command on EX Series switches. Output fields are listed in the approximate order in which they appear.

Table 32: show ethernet-switching table Output Fields

Field Name	Field Description	Level of Output
VLAN	The name of a VLAN.	All levels
Tag	The VLAN ID tag name or number.	**extensive**
MAC or **MAC address**	The MAC address associated with the VLAN.	All levels
Type	The type of MAC address. Values are: • **static**—The MAC address is manually created. • **learn**—The MAC address is learned dynamically from a packet's source MAC address. • **flood**—The MAC address is unknown and flooded to all members. • **persistent**—The learned MAC addresses that will persist across restarts of the switch or interface-down events.	All levels except **persistent-mac**
Type	The type of MAC address. Values are: • **installed**—addresses that are in the Ethernet switching table. • **uninstalled**—addresses that could not be installed in the table or were uninstalled in an interface-down event and will be reinstalled in the table when the interface comes back up.	**persistent-mac**
Age	The time remaining before the entry ages out and is removed from the Ethernet switching table.	All levels
Interfaces	Interface associated with learned MAC addresses or **All-members** (flood entry).	All levels
Learned	For learned entries, the time which the entry was added to the Ethernet switching table.	**detail**, **extensive**
Nexthop index	The next-hop index number.	**detail**, **extensive**
persistent-mac	**installed** indicates MAC addresses that are in the Ethernet switching table and **uninstalled** indicates MAC addresses that could not be installed in the table or were uninstalled in an interface-down event (and will be reinstalled in the table when the interface comes back up).	

For EX Series, MX Series and QFX Series:

The table describes the output fields for the **show ethernet-switching table** command on EX Series, MX Series and QFX Series. Output fields are listed in the approximate order in which they appear.

Table 33: show ethernet-switching table Output fields

Field Name	Field Description
Routing instance	Name of the routing instance.
VLAN name	Name of the VLAN.

Table 33: show ethernet-switching table Output fields (continued)

Field Name	Field Description
MAC address	MAC address or addresses learned on a logical interface.
MAC flags	Status of MAC address learning properties for each interface: • **S**—Static MAC address is configured. • **D**—Dynamic MAC address is configured. • **L**—Locally learned MAC address is configured. • **SE**—MAC accounting is enabled. • **NM**—Non-configured MAC. • **R**—Locally learned MAC address is configured.
Age	This field is not supported.
Logical interface	Name of the logical interface.
Active source	IP address of remote entity on which MAC address is learned.
MAC count	Number of MAC addresses learned on the specific routing instance or interface.
Learning interface	Name of the logical interface on which the MAC address was learned.
Learning VLAN	VLAN ID of the routing instance or VLAN in which the MAC address was learned.
Layer 2 flags	Debugging flags signifying that the MAC address is present in various lists.
Epoch	Spanning-tree-protocolepoch number identifying when the MAC address was learned. Used for debugging.
Sequence number	Sequence number assigned to this MAC address. Used for debugging.
Learning mask	Mask of the Packet Forwarding Engines where this MAC address was learned. Used for debugging.
IPC generation	Creation time of the logical interface when this MAC address was learned. Used for debugging.

For SRX Series:

Table 34 on page 775 lists the output fields for the **show ethernet-switching table** command. Output fields are listed in the approximate order in which they appear.

Table 34: show ethernet-switching table Output Fields

Field Name	Field Description
VLAN	The name of a VLAN.

Table 34: show ethernet-switching table Output Fields (continued)

Field Name	Field Description
MAC address	The MAC address associated with the VLAN.
Type	The type of MAC address. Values are: • static—The MAC address is manually created. • learn—The MAC address is learned dynamically from a packet's source MAC address. • flood—The MAC address is unknown and flooded to all members.
Age	The time remaining before the entry ages out and is removed from the Ethernet switching table.
Interfaces	Interface associated with learned MAC addresses or All-members (flood entry).
Learned	For learned entries, the time which the entry was added to the Ethernet switching table.

Sample Output

show ethernet-switching table (Enhanced Layer 2 Software on QFX Series, QFabric, NFX Series and EX460)

```
user@switch> show ethernet-switching table
MAC flags (S - static MAC, D - dynamic MAC, L - locally learned, P - Persistent
static
           SE - statistics enabled, NM - non configured MAC, R - remote PE MAC,
O - ovsdb MAC)


Ethernet switching table : 2 entries, 2 learned
Routing instance : default-switch
    Vlan                MAC                 MAC         Age    Logical
    name                address             flags              interface
    vlan1               b0:c6:9a:ca:3c:01   D             -   ae1.0

    vlan1               b0:c6:9a:ca:3c:03   D             -   ae1.0


MAC flags (S - static MAC, D - dynamic MAC, L - locally learned, P - Persistent
static
           SE - statistics enabled, NM - non configured MAC, R - remote PE MAC,
O - ovsdb MAC)

Ethernet switching table : 2 entries, 2 learned

Routing instance : default-switch
    Vlan                MAC                 MAC         Age    Logical
    name                address             flags              interface
    vlan10              b0:c6:9a:ca:3c:01   D             -   ae1.0

    vlan10              b0:c6:9a:ca:3c:03   D             -   ae1.0


MAC flags (S - static MAC, D - dynamic MAC, L - locally learned, P - Persistent
static
           SE - statistics enabled, NM - non configured MAC, R - remote PE MAC,
```

```
O - ovsdb MAC)


Ethernet switching table : 2 entries, 2 learned
Routing instance : default-switch
    Vlan                MAC                 MAC         Age    Logical
    name                address             flags              interface
    vlan2               b0:c6:9a:ca:3c:01   D             -   ae1.0

    vlan2               b0:c6:9a:ca:3c:03   D             -   ae1.0


MAC flags (S - static MAC, D - dynamic MAC, L - locally learned, P - Persistent
static
           SE - statistics enabled, NM - non configured MAC, R - remote PE MAC,
O - ovsdb MAC)


Ethernet switching table : 2 entries, 2 learned
Routing instance : default-switch
    Vlan                MAC                 MAC         Age    Logical
    name                address             flags              interface
    vlan3               b0:c6:9a:ca:3c:01   D             -   ae1.0

    vlan3               b0:c6:9a:ca:3c:03   D             -   ae1.0


MAC flags (S - static MAC, D - dynamic MAC, L - locally learned, P - Persistent
static
           SE - statistics enabled, NM - non configured MAC, R - remote PE MAC,
O - ovsdb MAC)


Ethernet switching table : 2 entries, 2 learned
Routing instance : default-switch
    Vlan                MAC                 MAC         Age    Logical
    name                address             flags              interface
    vlan4               b0:c6:9a:ca:3c:01   D             -   ae1.0

    vlan4               b0:c6:9a:ca:3c:03   D             -   ae1.0
```

show ethernet-switching table (QFX Series, QFabric, NFX Series and EX460)

```
user@switch> show ethernet-switching table
Ethernet-switching table: 57 entries, 17 learned
  VLAN              MAC address       Type         Age Interfaces
  F2                *                 Flood          - All-members
  F2                00:00:05:00:00:03 Learn          0 xe-0/0/44.0
  F2                00:19:e2:50:7d:e0 Static         - Router
  Linux             *                 Flood          - All-members
  Linux             00:19:e2:50:7d:e0 Static         - Router
  Linux             00:30:48:90:54:89 Learn          0 xe-0/0/47.0
  T1                *                 Flood          - All-members
  T1                00:00:05:00:00:01 Learn          0 xe-0/0/46.0
  T1                00:00:5e:00:01:00 Static         - Router
  T1                00:19:e2:50:63:e0 Learn          0 xe-0/0/46.0
  T1                00:19:e2:50:7d:e0 Static         - Router
  T10               *                 Flood          - All-members
  T10               00:00:5e:00:01:09 Static         - Router
  T10               00:19:e2:50:63:e0 Learn          0 xe-0/0/46.0
  T10               00:19:e2:50:7d:e0 Static         - Router
```

```
  T111              *                 Flood          - All-members
  T111              00:19:e2:50:63:e0 Learn          0 xe-0/0/15.0
  T111              00:19:e2:50:7d:e0 Static         - Router
  T111              00:19:e2:50:ac:00 Learn          0 xe-0/0/15.0
  T2                *                 Flood          - All-members
  T2                00:00:5e:00:01:01 Static         - Router
  T2                00:19:e2:50:63:e0 Learn          0 xe-0/0/46.0
  T2                00:19:e2:50:7d:e0 Static         - Router
  T3                *                 Flood          - All-members
  T3                00:00:5e:00:01:02 Static         - Router
  T3                00:19:e2:50:63:e0 Learn          0 xe-0/0/46.0
  T3                00:19:e2:50:7d:e0 Static         - Router
  T4                *                 Flood          - All-members
  T4                00:00:5e:00:01:03 Static         - Router
  T4                00:19:e2:50:63:e0 Learn          0 xe-0/0/46.0
[output truncated]
```

show ethernet-switching table (Private VLANs on QFX Series, QFabric, NFX Series and EX460)

```
user@switch> show ethernet-switching table
Ethernet-switching table: 10 entries, 3 learned
  VLAN              MAC address       Type         Age Interfaces
  pvlan             *                 Flood          - All-members
  pvlan             00:10:94:00:00:02 Replicated        - xe-0/0/28.0
  pvlan             00:10:94:00:00:35 Replicated        - xe-0/0/46.0
  pvlan             00:10:94:00:00:46 Replicated        - xe-0/0/4.0
  c2                *                 Flood          - All-members
  c2                00:10:94:00:00:02 Learn          0 xe-0/0/28.0
  c1                *                 Flood          - All-members
  c1                00:10:94:00:00:46 Learn          0 xe-0/0/4.0
  __pvlan_pvlan_xe-0/0/46.0__ *       Flood          - All-members
  __pvlan_pvlan_xe-0/0/46.0__ 00:10:94:00:00:35 Learn        0 xe-0/0/46.0
```

show ethernet-switching table (Junos Fusion Data Center with EVPN on QFX Series switches)

```
user@switch> show ethernet-switching table
MAC flags (S - static MAC, D - dynamic MAC, L - locally learned, P - Persistent
static
           SE - statistics enabled, NM - non configured MAC, R - remote PE MAC,
O - ovsdb MAC)

Ethernet switching table : 30 entries, 30 learned
Routing instance : default-switch
   Vlan                MAC                 MAC      Logical                Active

   name                address             flags    interface              source

   v100                00:31:46:e8:f9:d6   D        vtep.32768
192.168.2.22
   v100                7c:e2:ca:e2:75:7c   D        vtep.32771
192.168.4.44
   v100                7c:e2:ca:e4:05:9a   D        vtep.32770
192.168.3.33
   v101                00:31:46:e8:f9:d6   D        vtep.32768
192.168.2.22
   v101                7c:e2:ca:e2:75:7c   D        vtep.32771
192.168.4.44
   v101                7c:e2:ca:e4:05:9a   D        vtep.32770
192.168.3.33
   v102                00:31:46:e8:f9:d6   D        vtep.32768
```

```
192.168.2.22
   v102                7c:e2:ca:e2:75:7c   D        vtep.32771
192.168.4.44
   v102                7c:e2:ca:e4:05:9a   D        vtep.32770
192.168.3.33
   v103                00:31:46:e8:f9:d6   D        vtep.32768
192.168.2.22
   v103                7c:e2:ca:e2:75:7c   D        vtep.32771
192.168.4.44
   v103                7c:e2:ca:e4:05:9a   D        vtep.32770
192.168.3.33
   v3001               00:31:46:e8:f9:d6   D        vtep.32768
192.168.2.22
   v3001               28:c0:da:6a:9f:c2   DL       ae11.0
   v3001               7c:e2:ca:e2:75:7c   D        vtep.32771
192.168.4.44
   v3001               7c:e2:ca:e4:05:9a   D        vtep.32770
192.168.3.33
   v3002               00:31:46:e8:f9:d6   D        vtep.32768
192.168.2.22
   v3002               7c:e2:ca:e2:75:7c   D        vtep.32771
192.168.4.44
   v3002               7c:e2:ca:e4:05:9a   D        vtep.32770
192.168.3.33
   v3003               00:31:46:e8:f9:d6   D        vtep.32768
192.168.2.22
   v3003               28:c0:da:6a:9f:c2   DL       ae11.0
   v3003               7c:e2:ca:e2:75:7c   D        vtep.32771
192.168.4.44
   v3003               7c:e2:ca:e4:05:9a   D        vtep.32770
192.168.3.33
   v3004               00:31:46:e8:f9:d6   D        vtep.32768
192.168.2.22
   v3004               7c:e2:ca:e2:75:7c   D        vtep.32771
192.168.4.44
   v3004               7c:e2:ca:e4:05:9a   D        vtep.32770
192.168.3.33
   v3005               00:31:46:e8:f9:d6   D        vtep.32768
192.168.2.22
   v3005               28:c0:da:6a:9f:c2   DL       ae11.0
   v3005               7c:e2:ca:e2:75:7c   D        vtep.32771
192.168.4.44
   v3005               7c:e2:ca:e4:05:9a   D        vtep.32770
192.168.3.33
```

show ethernet-switching table brief (QFX Series, QFabric, NFX Series and EX460)

```
user@switch> show ethernet-switching table brief
Ethernet-switching table: 57 entries, 17 learned
  VLAN              MAC address       Type          Age Interfaces
  F2                *                 Flood           - All-members
  F2                00:00:05:00:00:03 Learn           0 xe-0/0/44.0
  F2                00:19:e2:50:7d:e0 Static          - Router
  Linux             *                 Flood           - All-members
  Linux             00:19:e2:50:7d:e0 Static          - Router
  Linux             00:30:48:90:54:89 Learn           0 xe-0/0/47.0
  T1                *                 Flood           - All-members
  T1                00:00:05:00:00:01 Learn           0 xe-0/0/46.0
  T1                00:00:5e:00:01:00 Static          - Router
  T1                00:19:e2:50:63:e0 Learn           0 xe-0/0/46.0
  T1                00:19:e2:50:7d:e0 Static          - Router
```

```
  T10                 *                   Flood          - All-members
  T10                 00:00:5e:00:01:09 Static           - Router
  T10                 00:19:e2:50:63:e0 Learn          0 xe-0/0/46.0
  T10                 00:19:e2:50:7d:e0 Static           - Router
  T111                *                   Flood          - All-members
  T111                00:19:e2:50:63:e0 Learn          0 xe-0/0/15.0
  T111                00:19:e2:50:7d:e0 Static           - Router
  T111                00:19:e2:50:ac:00 Learn          0 xe-0/0/15.0
  T2                  *                   Flood          - All-members
  T2                  00:00:5e:00:01:01 Static           - Router
  T2                  00:19:e2:50:63:e0 Learn          0 xe-0/0/46.0
  T2                  00:19:e2:50:7d:e0 Static           - Router
  T3                  *                   Flood          - All-members
  T3                  00:00:5e:00:01:02 Static           - Router
  T3                  00:19:e2:50:63:e0 Learn          0 xe-0/0/46.0
  T3                  00:19:e2:50:7d:e0 Static           - Router
  T4                  *                   Flood          - All-members
  T4                  00:00:5e:00:01:03 Static           - Router
  T4                  00:19:e2:50:63:e0 Learn          0 xe-0/0/46.0
[output truncated]
```

show ethernet-switching table detail (QFX Series, QFabric, NFX Series and EX460)

```
user@switch> show ethernet-switching table detail
Ethernet-switching table: 57 entries, 17 learned
  F2, *
    Interface(s): xe-0/0/44.0
    Type: Flood
    Nexthop index: 0

  F2, 00:00:05:00:00:03
    Interface(s): xe-0/0/44.0
    Type: Learn, Age: 0, Learned: 2:03:09
    Nexthop index: 0

  F2, 00:19:e2:50:7d:e0
    Interface(s): Router
    Type: Static
    Nexthop index: 0

  Linux, *
    Interface(s): xe-0/0/47.0
    Type: Flood
    Nexthop index: 0

  Linux, 00:19:e2:50:7d:e0
    Interface(s): Router
    Type: Static
    Nexthop index: 0

  Linux, 00:30:48:90:54:89
    Interface(s): xe-0/0/47.0
    Type: Learn, Age: 0, Learned: 2:03:08
    Nexthop index: 0

  T1, *
    Interface(s): xe-0/0/46.0
    Type: Flood
    Nexthop index: 0

  T1, 00:00:05:00:00:01
```

```
    Interface(s): xe-0/0/46.0
    Type: Learn, Age: 0, Learned: 2:03:07
    Nexthop index: 0

  T1, 00:00:5e:00:01:00
    Interface(s): Router
    Type: Static
    Nexthop index: 0

  T1, 00:19:e2:50:63:e0
    Interface(s): xe-0/0/46.0
    Type: Learn, Age: 0, Learned: 2:03:07
    Nexthop index: 0

  T1, 00:19:e2:50:7d:e0
    Interface(s): Router
    Type: Static
    Nexthop index: 0

  T10, *
    Interface(s): xe-0/0/46.0
    Type: Flood
    Nexthop index: 0

  T10, 00:00:5e:00:01:09
    Interface(s): Router
    Type: Static
    Nexthop index: 0

  T10, 00:19:e2:50:63:e0
    Interface(s): xe-0/0/46.0
    Type: Learn, Age: 0, Learned: 2:03:08
    Nexthop index: 0

  T10, 00:19:e2:50:7d:e0
    Interface(s): Router
    Type: Static
    Nexthop index: 0

  T111, *
    Interface(s): xe-0/0/15.0
    Type: Flood
    Nexthop index: 0
[output truncated]
```

show ethernet-switching table extensive (QFX Series, QFabric, NFX Series and EX460)

```
user@switch> show ethernet-switching table extensive
Ethernet-switching table: 57 entries, 17 learned
  F2, *
    Interface(s): xe-0/0/44.0
    Type: Flood
    Nexthop index: 0

  F2, 00:00:05:00:00:03
    Interface(s): xe-0/0/44.0
    Type: Learn, Age: 0, Learned: 2:03:09
    Nexthop index: 0

  F2, 00:19:e2:50:7d:e0
    Interface(s): Router
```

```
  Type: Static
  Nexthop index: 0

Linux, *
  Interface(s): xe-0/0/47.0
  Type: Flood
  Nexthop index: 0

Linux, 00:19:e2:50:7d:e0
  Interface(s): Router
  Type: Static
  Nexthop index: 0

Linux, 00:30:48:90:54:89
  Interface(s): xe-0/0/47.0
  Type: Learn, Age: 0, Learned: 2:03:08
  Nexthop index: 0

T1, *
  Interface(s): xe-0/0/46.0
  Type: Flood
  Nexthop index: 0

T1, 00:00:05:00:00:01
  Interface(s): xe-0/0/46.0
  Type: Learn, Age: 0, Learned: 2:03:07
  Nexthop index: 0

T1, 00:00:5e:00:01:00
  Interface(s): Router
  Type: Static
  Nexthop index: 0

T1, 00:19:e2:50:63:e0
  Interface(s): xe-0/0/46.0
  Type: Learn, Age: 0, Learned: 2:03:07
  Nexthop index: 0

T1, 00:19:e2:50:7d:e0
  Interface(s): Router
  Type: Static
  Nexthop index: 0

T10, *
  Interface(s): xe-0/0/46.0
  Type: Flood
  Nexthop index: 0

T10, 00:00:5e:00:01:09
  Interface(s): Router
  Type: Static
  Nexthop index: 0

T10, 00:19:e2:50:63:e0
  Interface(s): xe-0/0/46.0
  Type: Learn, Age: 0, Learned: 2:03:08
  Nexthop index: 0

T10, 00:19:e2:50:7d:e0
  Interface(s): Router
  Type: Static
```

```
    Nexthop index: 0

  T111, *
    Interface(s): xe-0/0/15.0
    Type: Flood
    Nexthop index: 0
[output truncated]
```

show ethernet-switching table interface (QFX Series, QFabric, NFX Series and EX460)

```
user@switch> show ethernet-switching table interface xe-0/0/1
Ethernet-switching table: 1 unicast entries
  VLAN              MAC address       Type         Age Interfaces
  V1                *                 Flood          - All-members
  V1                00:00:05:00:00:05 Learn          0 xe-0/0/1.0
```

show ethernet-switching table (EX Series switches)

```
user@switch> show ethernet-switching table
Ethernet-switching table: 57 entries, 15 learned, 2 persistent
  VLAN              MAC address       Type         Age Interfaces
  F2                *                 Flood          - All-members
  F2                00:00:05:00:00:03 Learn          0 ge-0/0/44.0
  F2                00:19:e2:50:7d:e0 Static         - Router
  Linux             *                 Flood          - All-members
  Linux             00:19:e2:50:7d:e0 Static         - Router
  Linux             00:30:48:90:54:89 Learn          0 ge-0/0/47.0
  T1                *                 Flood          - All-members
  T1                00:00:05:00:00:01 Persistent     0 ge-0/0/46.0
  T1                00:00:5e:00:01:00 Static         - Router
  T1                00:19:e2:50:63:e0 Persistent     0 ge-0/0/46.0
  T1                00:19:e2:50:7d:e0 Static         - Router
  T10               *                 Flood          - All-members
  T10               00:00:5e:00:01:09 Static         - Router
  T10               00:19:e2:50:63:e0 Learn          0 ge-0/0/46.0
  T10               00:19:e2:50:7d:e0 Static         - Router
  T111              *                 Flood          - All-members
  T111              00:19:e2:50:63:e0 Learn          0 ge-0/0/15.0
  T111              00:19:e2:50:7d:e0 Static         - Router
  T111              00:19:e2:50:ac:00 Learn          0 ge-0/0/15.0
  T2                *                 Flood          - All-members
  T2                00:00:5e:00:01:01 Static         - Router
  T2                00:19:e2:50:63:e0 Learn          0 ge-0/0/46.0
  T2                00:19:e2:50:7d:e0 Static         - Router
  T3                *                 Flood          - All-members
  T3                00:00:5e:00:01:02 Static         - Router
  T3                00:19:e2:50:63:e0 Learn          0 ge-0/0/46.0
  T3                00:19:e2:50:7d:e0 Static         - Router
  T4                *                 Flood          - All-members
  T4                00:00:5e:00:01:03 Static         - Router
  T4                00:19:e2:50:63:e0 Learn          0 ge-0/0/46.0
[output truncated]
```

show ethernet-switching table brief (EX Series switches)

```
user@switch> show ethernet-switching table brief
Ethernet-switching table: 57 entries, 15 learned, 2 persistent entries
  VLAN              MAC address       Type         Age Interfaces
  F2                *                 Flood          - All-members
  F2                00:00:05:00:00:03 Learn          0 ge-0/0/44.0
```

```
  F2                 00:19:e2:50:7d:e0 Static         - Router
  Linux              *                 Flood          - All-members
  Linux              00:19:e2:50:7d:e0 Static         - Router
  Linux              00:30:48:90:54:89 Learn          0 ge-0/0/47.0
  T1                 *                 Flood          - All-members
  T1                 00:00:05:00:00:01 Persistent     0 ge-0/0/46.0
  T1                 00:00:5e:00:01:00 Static         - Router
  T1                 00:19:e2:50:63:e0 Persistent     0 ge-0/0/46.0
  T1                 00:19:e2:50:7d:e0 Static         - Router
  T10                *                 Flood          - All-members
  T10                00:00:5e:00:01:09 Static         - Router
  T10                00:19:e2:50:63:e0 Learn          0 ge-0/0/46.0
  T10                00:19:e2:50:7d:e0 Static         - Router
  T111               *                 Flood          - All-members
  T111               00:19:e2:50:63:e0 Learn          0 ge-0/0/15.0
  T111               00:19:e2:50:7d:e0 Static         - Router
  T111               00:19:e2:50:ac:00 Learn          0 ge-0/0/15.0
  T2                 *                 Flood          - All-members
  T2                 00:00:5e:00:01:01 Static         - Router
  T2                 00:19:e2:50:63:e0 Learn          0 ge-0/0/46.0
  T2                 00:19:e2:50:7d:e0 Static         - Router
  T3                 *                 Flood          - All-members
  T3                 00:00:5e:00:01:02 Static         - Router
  T3                 00:19:e2:50:63:e0 Learn          0 ge-0/0/46.0
  T3                 00:19:e2:50:7d:e0 Static         - Router
  T4                 *                 Flood          - All-members
  T4                 00:00:5e:00:01:03 Static         - Router
  T4                 00:19:e2:50:63:e0 Learn          0 ge-0/0/46.0
[output truncated]
```

show ethernet-switching table detail (EX Series switches)

```
user@switch> show ethernet-switching table detail
Ethernet-switching table: 5 entries, 2 learned entries
 VLAN: default, Tag: 0, MAC: *, Interface: All-members
  Interfaces:
   ge-0/0/11.0, ge-0/0/20.0, ge-0/0/30.0, ge-0/0/36.0, ge-0/0/3.0
  Type: Flood
  Nexthop index: 1307

 VLAN: default, Tag: 0, MAC: 00:1f:12:30:b8:83, Interface: ge-0/0/3.0
   Type: Learn, Age: 0, Learned: 20:09:26
   Nexthop index: 1315

 VLAN: v1, Tag: 101, MAC: *, Interface: All-members
  Interfaces:
   ge-0/0/31.0
  Type: Flood
  Nexthop index: 1313

 VLAN: v1, Tag: 101, MAC: 00:1f:12:30:b8:89, Interface: ge-0/0/31.0
  Type: Learn, Age: 0, Learned: 20:09:25
  Nexthop index: 1312

 VLAN: v2, Tag: 102, MAC: *, Interface: All-members
  Interfaces:
   ae0.0
  Type: Flood
  Nexthop index: 1317
```

show ethernet-switching table extensive (EX Series switches)

```
user@switch> show ethernet-switching table extensive
Ethernet-switching table: 3 entries, 1 learned, 5 persistent entries

    VLAN: v1, Tag: 10, MAC: *, Interface: All-members
    Interfaces:
                ge-0/0/14.0, ge-0/0/1.0, ge-0/0/2.0, ge-0/0/3.0, ge-0/0/4.0,
                ge-0/0/5.0, ge-0/0/6.0, ge-0/0/7.0, ge-0/0/8.0, ge-0/0/10.0,
                ge-0/0/0.0
    Type: Flood
    Nexthop index: 567

    VLAN: v1, Tag: 10, MAC: 00:21:59:c6:93:22, Interface: Router
    Type: Static
    Nexthop index: 0

    VLAN: v1, Tag: 10, MAC: 00:21:59:c9:9a:4e, Interface: ge-0/0/14.0
    Type: Learn, Age: 0, Learned: 18:40:50
    Nexthop index: 564
```

show ethernet-switching table persistent-mac (EX Series switches)

```
user@switch> show ethernet-switching table persistent-mac
VLAN              MAC address       Type       Interface
default           00:10:94:00:00:02 installed    ge-0/0/42.0
default           00:10:94:00:00:03 installed    ge-0/0/42.0
default           00:10:94:00:00:04 installed    ge-0/0/42.0
default           00:10:94:00:00:05 installed    ge-0/0/42.0
default           00:10:94:00:00:06 installed    ge-0/0/42.0
default           00:10:94:00:05:02 uninstalled ge-0/0/16.0
default           00:10:94:00:06:03 uninstalled ge-0/0/16.0
default           00:10:94:00:07:04 uninstalled ge-0/0/16.0
```

show ethernet-switching table persistent-mac interface ge-0/0/16.0 (EX Series switches)

```
VLAN              MAC address       Type       Interface
default           00:10:94:00:05:02 uninstalled ge-0/0/16.0
default           00:10:94:00:06:03 uninstalled ge-0/0/16.0
default           00:10:94:00:07:04 uninstalled ge-0/0/16.0
```

show ethernet-switching table (EX Series, MX Series and QFX Series)

```
user@host> show ethernet-switching table
MAC flags (S - static MAC, D - dynamic MAC, L - locally learned
           SE - statistics enabled, NM - non configured MAC, R - remote PE MAC)

Routing instance : default-switch
    Vlan                MAC                 MAC         Age    Logical
    name                address             flags              interface
    VLAN101             88:e0:f3:bb:07:f0   D             -   ae20.0


MAC flags (S - static MAC, D - dynamic MAC, L - locally learned
           SE - statistics enabled, NM - non configured MAC, R - remote PE MAC)

Routing instance : default-switch
    Vlan                MAC                 MAC         Age    Logical
    name                address             flags              interface
    VLAN102             88:e0:f3:bb:07:f0   D             -   ae20.0
```

```
MAC flags (S - static MAC, D - dynamic MAC, L - locally learned
           SE - statistics enabled, NM - non configured MAC, R - remote PE MAC)

Routing instance : default-switch
    Vlan                MAC                 MAC         Age    Logical
    name                address             flags              interface
    VLAN103             88:e0:f3:bb:07:f0   D             -   ae20.0


MAC flags (S - static MAC, D - dynamic MAC, L - locally learned
           SE - statistics enabled, NM - non configured MAC, R - remote PE MAC)

Routing instance : default-switch
    Vlan                MAC                 MAC         Age    Logical
    name                address             flags              interface
    VLAN104             88:e0:f3:bb:07:f0   D             -   ae20.0


MAC flags (S - static MAC, D - dynamic MAC, L - locally learned
           SE - statistics enabled, NM - non configured MAC, R - remote PE MAC)

Routing instance : default-switch
    Vlan                MAC                 MAC         Age    Logical
    name                address             flags              interface
    VLAN1101            00:1f:12:32:f5:c1   D             -   ae0.0


MAC flags (S - static MAC, D - dynamic MAC, L - locally learned
           SE - statistics enabled, NM - non configured MAC, R - remote PE MAC)

Routing instance : default-switch
    Vlan                MAC                 MAC         Age    Logical
    name                address             flags              interface
    VLAN1102            00:1f:12:32:f5:c1   D             -   ae0.0


MAC flags (S - static MAC, D - dynamic MAC, L - locally learned
           SE - statistics enabled, NM - non configured MAC, R - remote PE MAC)

Routing instance : default-switch
    Vlan                MAC                 MAC         Age    Logical
    name                address             flags              interface
    VLAN1103            00:1f:12:32:f5:c1   D             -   ae0.0


MAC flags (S - static MAC, D - dynamic MAC, L - locally learned
           SE - statistics enabled, NM - non configured MAC, R - remote PE MAC)

Routing instance : default-switch
    Vlan                MAC                 MAC         Age    Logical
    name                address             flags              interface
    VLAN1104            00:1f:12:32:f5:c1   D             -   ae0.0


MAC flags (S - static MAC, D - dynamic MAC, L - locally learned
           SE - statistics enabled, NM - non configured MAC, R - remote PE MAC)

Routing instance : default-switch
    Vlan                MAC                 MAC         Age    Logical
```

```
    name                address             flags              interface
    VLAN1105            00:1f:12:32:f5:c1   D             -    ae0.0


MAC flags (S - static MAC, D - dynamic MAC, L - locally learned
           SE - statistics enabled, NM - non configured MAC, R - remote PE MAC)

Routing instance : default-switch
    Vlan                MAC                 MAC         Age    Logical
    name                address             flags              interface
    VLAN1106            00:1f:12:32:f5:c1   D             -    ae0.0
[...output truncated...]
```

show ethernet-switching table brief

```
user@host> show ethernet-switching table brief
MAC flags (S - static MAC, D - dynamic MAC, L - locally learned
           SE - statistics enabled, NM - non configured MAC, R - remote PE MAC)

Routing instance : default-switch
    Vlan                MAC                 MAC         Age    Logical
    name                address             flags              interface
    VLAN101             88:e0:f3:bb:07:f0   D             -    ae20.0


MAC flags (S - static MAC, D - dynamic MAC, L - locally learned
           SE - statistics enabled, NM - non configured MAC, R - remote PE MAC)

Routing instance : default-switch
    Vlan                MAC                 MAC         Age    Logical
    name                address             flags              interface
    VLAN102             88:e0:f3:bb:07:f0   D             -    ae20.0


MAC flags (S - static MAC, D - dynamic MAC, L - locally learned
           SE - statistics enabled, NM - non configured MAC, R - remote PE MAC)

Routing instance : default-switch
    Vlan                MAC                 MAC         Age    Logical
    name                address             flags              interface
    VLAN103             88:e0:f3:bb:07:f0   D             -    ae20.0


MAC flags (S - static MAC, D - dynamic MAC, L - locally learned
           SE - statistics enabled, NM - non configured MAC, R - remote PE MAC)

Routing instance : default-switch
    Vlan                MAC                 MAC         Age    Logical
    name                address             flags              interface
    VLAN104             88:e0:f3:bb:07:f0   D             -    ae20.0


MAC flags (S - static MAC, D - dynamic MAC, L - locally learned
           SE - statistics enabled, NM - non configured MAC, R - remote PE MAC)

Routing instance : default-switch
    Vlan                MAC                 MAC         Age    Logical
    name                address             flags              interface
    VLAN1101            00:1f:12:32:f5:c1   D             -    ae0.0
[...output truncated...]
```

show ethernet-switching table count

```
user@host> show ethernet-switching table count
0 MAC address learned in routing instance default-switch VLAN VLAN1000
ae26.0:1000

1 MAC address learned in routing instance default-switch VLAN VLAN101
ae20.0:101

  MAC address count per learn VLAN within routing instance:
    Learn VLAN ID      MAC count      Static MAC count
           101              1                 0

1 MAC address learned in routing instance default-switch VLAN VLAN102
ae20.0:102

  MAC address count per learn VLAN within routing instance:
    Learn VLAN ID      MAC count      Static MAC count
           102              1                 0

1 MAC address learned in routing instance default-switch VLAN VLAN103
ae20.0:103

  MAC address count per learn VLAN within routing instance:
    Learn VLAN ID      MAC count      Static MAC count
           103              1                 0

1 MAC address learned in routing instance default-switch VLAN VLAN104
ae20.0:104

  MAC address count per learn VLAN within routing instance:
    Learn VLAN ID      MAC count      Static MAC count
           104              1                 0

0 MAC address learned in routing instance default-switch VLAN VLAN105
ae20.0:105

0 MAC address learned in routing instance default-switch VLAN VLAN106
ae20.0:106

0 MAC address learned in routing instance default-switch VLAN VLAN107
ae20.0:107

0 MAC address learned in routing instance default-switch VLAN VLAN108
ae20.0:108

0 MAC address learned in routing instance default-switch VLAN VLAN109
ae20.0:109

0 MAC address learned in routing instance default-switch VLAN VLAN110
ae20.0:110

1 MAC address learned in routing instance default-switch VLAN VLAN1101
ae0.0:1101

  MAC address count per learn VLAN within routing instance:
    Learn VLAN ID      MAC count      Static MAC count
          1101              1                 0

1 MAC address learned in routing instance default-switch VLAN VLAN1102
```



```
ae0.0:1102

  MAC address count per learn VLAN within routing instance:
    Learn VLAN ID      MAC count      Static MAC count
          1102              1                 0
[...output truncated...]
```

show ethernet-switching table extensive

```
user@host> show ethernet-switching table extensive

MAC address: 88:e0:f3:bb:07:f0
  Routing instance: default-switch
VLAN ID: 101
   Learning interface: ae20.0
   Layer 2 flags: in_hash,in_ifd,in_ifl,in_vlan,in_rtt,kernel,in_ifbd
   Epoch: 0                           Sequence number: 2
   Learning mask: 0x00000008

MAC address: 88:e0:f3:bb:07:f0
  Routing instance: default-switch
VLAN ID: 102
   Learning interface: ae20.0
   Layer 2 flags: in_hash,in_ifd,in_ifl,in_vlan,in_rtt,kernel,in_ifbd
   Epoch: 0                           Sequence number: 2
   Learning mask: 0x00000008

MAC address: 88:e0:f3:bb:07:f0
  Routing instance: default-switch
VLAN ID: 103
   Learning interface: ae20.0
   Layer 2 flags: in_hash,in_ifd,in_ifl,in_vlan,in_rtt,kernel,in_ifbd
   Epoch: 0                           Sequence number: 2
   Learning mask: 0x00000008

MAC address: 88:e0:f3:bb:07:f0
  Routing instance: default-switch
VLAN ID: 104
   Learning interface: ae20.0
   Layer 2 flags: in_hash,in_ifd,in_ifl,in_vlan,in_rtt,kernel,in_ifbd
   Epoch: 0                           Sequence number: 2
   Learning mask: 0x00000008

MAC address: 00:1f:12:32:f5:c1
  Routing instance: default-switch
VLAN ID: 1101
   Learning interface: ae0.0
   Layer 2 flags: in_hash,in_ifd,in_ifl,in_vlan,in_rtt,kernel,in_ifbd
   Epoch: 0                           Sequence number: 2
   Learning mask: 0x00000008

MAC address: 00:1f:12:32:f5:c1
  Routing instance: default-switch
VLAN ID: 1102
   Learning interface: ae0.0
   Layer 2 flags: in_hash,in_ifd,in_ifl,in_vlan,in_rtt,kernel,in_ifbd
   Epoch: 0                           Sequence number: 2
   Learning mask: 0x00000008

MAC address: 00:1f:12:32:f5:c1
  Routing instance: default-switch
```

```
VLAN ID: 1103
   Learning interface: ae0.0
   Layer 2 flags: in_hash,in_ifd,in_ifl,in_vlan,in_rtt,kernel,in_ifbd
   Epoch: 0                          Sequence number: 2
   Learning mask: 0x00000008

MAC address: 00:1f:12:32:f5:c1
  Routing instance: default-switch
VLAN ID: 1104
   Learning interface: ae0.0
   Layer 2 flags: in_hash,in_ifd,in_ifl,in_vlan,in_rtt,kernel,in_ifbd
   Epoch: 0                          Sequence number: 2
   Learning mask: 0x00000008
```

Sample Output

show ethernet-switching table detail (SRX Series)

```
user@host> show ethernet-switching table detail
Ethernet-switching table: 57 entries, 17 learned
F2, *
Interface(s): ge-0/0/44.0
Type: Flood
F2, 00:00:5E:00:53:AC
Interface(s): ge-0/0/44.0
Type: Learn, Age: 0, Learned: 2:03:09
F2, 00:00:5E:00:53:AA
Interface(s): Router
Type: Static
Linux, *
Interface(s): ge-0/0/47.0
Type: Flood
Linux, 00:00:5E:00:53:AB
Interface(s): Router
Type: Static
Linux, 00:00:5E:00:53:AC
Interface(s): ge-0/0/47.0
Type: Learn, Age: 0, Learned: 2:03:08
T1, *
Interface(s): ge-0/0/46.0
Type: Flood
T1, 00:00:5E:00:53:AD
Interface(s): ge-0/0/46.0
Type: Learn, Age: 0, Learned: 2:03:07
T1, 00:00:5E:00:53:AE
Interface(s): Router
Type: Static
T1, 00:00:5E:00:53:AF
Interface(s): ge-0/0/46.0
Type: Learn, Age: 0, Learned: 2:03:07
T1, 00:00:5E:00:53:AG
Interface(s): Router
Type: Static
T10, *
Interface(s): ge-0/0/46.0
Type: Flood
T10, 00:00:5E:00:53:AH
Interface(s): Router
Type: Static
T10, 00:00:5E:00:53:AI
Interface(s): ge-0/0/46.0
```

```
Type: Learn, Age: 0, Learned: 2:03:08
T10, 00:00:5E:00:53:AJ
Interface(s): Router
Type: Static
T111, *
Interface(s): ge-0/0/15.0
Type: Flood
[output truncated]
```

Sample Output

show ethernet-switching table extensive (SRX Series)

```
user@host> show ethernet-switching table extensive
Ethernet-switching table: 57 entries, 17 learned
F2, *
Interface(s): ge-0/0/44.0
Type: Flood
F2, 00:00:5E:00:53:AC
Interface(s): ge-0/0/44.0
Type: Learn, Age: 0, Learned: 2:03:09
F2, 00:00:5E:00:53:AA
Interface(s): Router
Type: Static
Linux, *
Interface(s): ge-0/0/47.0
Type: Flood
Linux, 00:00:5E:00:53:AB
Interface(s): Router
Type: Static
Linux, 00:00:5E:00:53:AC
Interface(s): ge-0/0/47.0
Type: Learn, Age: 0, Learned: 2:03:08
T1, *
Interface(s): ge-0/0/46.0
Type: Flood
T1, 00:00:5E:00:53:AD
Interface(s): ge-0/0/46.0
Type: Learn, Age: 0, Learned: 2:03:07
T1, 00:00:5E:00:53:AE
Interface(s): Router
Type: Static
T1, 00:00:5E:00:53:AF
Interface(s): ge-0/0/46.0
Type: Learn, Age: 0, Learned: 2:03:07
T1, 00:00:5E:00:53:AG
Interface(s): Router
Type: Static
T10, *
Interface(s): ge-0/0/46.0
Type: Flood
T10, 00:00:5E:00:53:AH
Interface(s): Router
Type: Static
T10, 00:00:5E:00:53:AI
Interface(s): ge-0/0/46.0
Type: Learn, Age: 0, Learned: 2:03:08
T10, 00:00:5E:00:53:AJ
Interface(s): Router
Type: Static
T111, *
```

```
Interface(s): ge-0/0/15.0
Type: Flood
[output truncated]
```

Sample Output

show ethernet-switching table interface ge-0/0/1 (SRX Series)

```
user@host> show ethernet-switching table interface ge-0/0/1
Ethernet-switching table: 1 unicast entries
VLAN     MAC address         Type     Age Interfaces
V1       *                   Flood    - All-members
V1       00:00:5E:00:53:AF   Learn    0 ge-0/0/1.0
```

show interfaces extensive satellite-device

Syntax show interfaces extensive satellite-device (device-alias | all)

Release Information Command introduced in Junos OS Release 14.2R3 for Junos Fusion Provider Edge.
Command introduced in Junos OS Release 16.1R1 for Junos Fusion Enterprise.
Command introduced in Junos OS Release 17.2R1 for Junos Fusion Enterprise.

Description Display the satellite device extended ports in a Junos Fusion.

Options **device-alias** ***device-alias***—Display extended port information for the satellite device using the specified device alias only.

all—Display information for all extended ports and aggregated Ethernet interfaces with extended ports as members configured on all of the satellite devices.

Required Privilege Level view

Related Documentation
- *Configuring or Expanding a Junos Fusion Enterprise*

List of Sample Output show interfaces extensive satellite-device all on page 799

Output Fields Table 35 on page 793 lists the output fields for the **show interfaces extensive satellite-device** command. Output fields are listed in the approximate order in which they appear.

Table 35: show interfaces extensive satellite-device Output Fields

Field Name	Field Description	Level of Output
Physical Interface		
Physical interface	Name of the physical interface.	All levels
Interface index	Index number of the physical interface, which reflects its initialization sequence.	**detail extensive** none
Device flags	Information about the physical device.	All levels
Flow control	Flow control status: **Enabled** or **Disabled**. NOTE: This field is only displayed if asymmetric flow control is not configured.	All levels
Pad to minimum frame size	Pad Tx VLAN-tagged frame to minimum of 68 bytes.	
Device flags	Information about the physical device.	All levels
Interface flags	Information about the interface.	All levels

Table 35: show interfaces extensive satellite-device Output Fields (continued)

Field Name	Field Description	Level of Output
Current address	Configured MAC address.	**detail extensive** none
Last flapped	Date, time, and how long ago the interface went from down to up. The format is **Last flapped:** *year-month-day hour: :minute:second:timezone* (*hour:minute:second* **ago**). For example, **Last flapped: 2008–01–16 10:52:40 UTC (3d 22:58 ago).**	**detail extensive** none
Statistics last cleared	Time when the statistics for the interface were last set to zero.	**detail extensive**
Extended port information	Satellite device port ID	
Traffic statistics	Number and rate of bytes and packets received and transmitted on the physical interface. • **Input bytes**—Number of bytes received on the interface. • **Output bytes**—Number of bytes transmitted on the interface. • **Input packets**—Number of packets received on the interface. • **Output packets**—Number of packets transmitted on the interface. NOTE: The bandwidth bps counter is not enabled.	**detail extensive**
IPv6 transit statistics	Number and rate of bytes and packets received and transmitted on the physical interface. • **Input bytes**—Number of bytes received on the interface. • **Output bytes**—Number of bytes transmitted on the interface. • **Input packets**—Number of packets received on the interface. • **Output packets**—Number of packets transmitted on the interface. NOTE: The bandwidth bps counter is not enabled.	**detail extensive**
Input errors	Input errors on the interface. The following paragraphs explain the counters whose meaning might not be obvious: • **Errors**—Sum of the incoming frame aborts and FCS errors. • **Drops**—Number of packets dropped by the input queue of the I/O Manager ASIC. If the interface is saturated, this number increments once for every packet that is dropped by the ASIC's RED mechanism. • **Framing errors**—Number of packets received with an invalid frame checksum (FCS). • **Runts**—Number of frames received that are smaller than the runt threshold. • **Giants**—Number of frames received that are greater than the giant threshold. • **Policed discards**—Number of frames that the incoming packet match code discarded because they were not recognized or not of interest. Usually, this field reports protocols that Junos OS does not handle. • **Resource errors**—Sum of transmit drops.	**extensive**

Table 35: show interfaces extensive satellite-device Output Fields (continued)

Field Name	Field Description	Level of Output
Output errors	Output errors on the interface. The following paragraphs explain the counters whose meaning might not be obvious: • **Carrier transitions**—Number of times the interface has gone from **down** to **up**. This number does not normally increment quickly, increasing only when the cable is unplugged, the far-end system is powered down and then up, or another problem occurs. If the number of carrier transitions increments quickly (perhaps once every 10 seconds), the cable, the far-end system, or the PIC or PIM is malfunctioning. • **Errors**—Sum of the outgoing frame aborts and FCS errors. • **Drops**—Number of packets dropped by the output queue of the I/O Manager ASIC. If the interface is saturated, this number increments once for every packet that is dropped by the ASIC's RED mechanism. • **MTU errors**—Number of packets whose size exceeded the MTU of the interface. • **Resource errors**—Sum of transmit drops.	**extensive**
Egress queues	Total number of egress queues supported on the specified interface.	**detail extensive**
Queue counters	CoS queue number and its associated user-configured forwarding class name. • **Queued packets**—Number of queued packets. • **Transmitted packets**—Number of transmitted packets. • **Dropped packets**—Number of packets dropped by the ASIC's RED mechanism.	**detail extensive**
Queue Number	The CoS queue number and the forwarding classes mapped to the queue number. The **Mapped forwarding class** column lists the forwarding classes mapped to each CoS queue.	**detail extensive**
Active alarms and Active defects	Ethernet-specific defects that can prevent the interface from passing packets. When a defect persists for a certain amount of time, it is promoted to an alarm. Based on the switch configuration, an alarm can ring the red or yellow alarm bell on the switch, or turn on the red or yellow alarm LED on the craft interface. These fields can contain the value **None** or **Link**. • **None**—There are no active defects or alarms. • **Link**—Interface has lost its link state, which usually means that the cable is unplugged, the far-end system has been turned off, or the PIC is malfunctioning.	**detail extensive** none

Table 35: show interfaces extensive satellite-device Output Fields (continued)

Field Name	Field Description	Level of Output
MAC statistics	**Receive** and **Transmit** statistics reported by the PIC's MAC subsystem. • **Total octets** and **total packets**—Total number of octets and packets. For Gigabit Ethernet IQ PICs, the received octets count varies by interface type. • **Unicast packets, Broadcast packets,** and **Multicast packets**—Number of unicast, broadcast, and multicast packets. • **CRC/Align errors**—Total number of packets received that had a length (excluding framing bits, but including FCS octets) of between 64 and 1518 octets, inclusive, and had either a bad FCS with an integral number of octets (FCS Error) or a bad FCS with a nonintegral number of octets (Alignment Error). • **FIFO error**—Number of FIFO errors that are reported by the ASIC on the PIC. If this value is ever nonzero, the PIC is probably malfunctioning. • **MAC control frames**—Number of MAC control frames. • **MAC pause frames**—Number of MAC control frames with **pause** operational code. • **Oversized frames**—Number of packets that exceeds the configured MTU. • **Jabber frames**—Number of frames that were longer than 1518 octets (excluding framing bits, but including FCS octets), and had either an FCS error or an alignment error. This definition of jabber is different from the definition in IEEE-802.3 section 8.2.1.5 (10BASE5) and section 10.3.1.4 (10BASE2). These documents define jabber as the condition in which any packet exceeds 20 ms. The allowed range to detect jabber is from 20 ms to 150 ms. • **Fragment frames**—Total number of packets that were less than 64 octets in length (excluding framing bits, but including FCS octets), and had either an FCS error or an alignment error. Fragment frames normally increment because both runts (which are normal occurrences caused by collisions) and noise hits are counted. • **VLAN tagged frames**—Number of frames that are VLAN tagged. The system uses the TPID of 0x8100 in the frame to determine whether a frame is tagged or not. This counter is not supported on EX Series switches and is always displayed as 0. • **Code violations**—Number of times an event caused the PHY to indicate “Data reception error” or “invalid data symbol error.”	**extensive**
Filter statistics	**Receive** and **Transmit** statistics reported by the PIC's MAC address filter subsystem.	**extensive**

Table 35: show interfaces extensive satellite-device Output Fields (continued)

Field Name	Field Description	Level of Output
Packet Forwarding Engine configuration	Information about the configuration of the Packet Forwarding Engine: • **Destination slot**—FPC slot number. • **CoS transmit queue**—Queue number and its associated user-configured forwarding class name. • **Bandwidth %**—Percentage of bandwidth allocated to the queue. • **Bandwidth bps**—Bandwidth allocated to the queue (in bps). • **Buffer %**—Percentage of buffer space allocated to the queue. • **Buffer usec**—Amount of buffer space allocated to the queue, in microseconds. This value is nonzero only if the buffer size is configured in terms of time. • **Priority**—Queue priority: **low** or **high**. • **Limit**—Displayed if rate limiting is configured for the queue. Possible values are **none** and **exact**. If **exact** is configured, the queue transmits only up to the configured bandwidth, even if excess bandwidth is available. If **none** is configured, the queue transmits beyond the configured bandwidth if bandwidth is available.	**extensive**
Logical Interface		
Logical interface	Name of the logical interface.	All levels
Index	Index number of the logical interface, which reflects its initialization sequence.	**detail extensive** none
SNMP ifIndex	SNMP interface index number for the logical interface.	**detail extensive** none
Generation	Unique number for use by Juniper Networks technical support only.	**detail extensive**
Flags	Information about the logical interface.	All levels
Statistics	• **Packets** • **pps** • **Bytes** • **bps**	All levels

Bundle	Provide information for each active bundle link.
	• **Input**
	  • **Packets**—
	  • **pps**
	  • **Bytes**
	  • **bps**
	  • **Output**
	  • **Packets**—
	  • **pps**
	  • **Bytes**
	  • **bps**
		All levels

Table 35: show interfaces extensive satellite-device Output Fields (continued)

Field Name	Field Description	Level of Output
Adaptive Statistics	• **Adaptive Adjusts** • **Adaptive Scans** • **Adaptive Updates**	All levels
Link	Link state: up or down.	All levels

LACP info	LACP state information for each aggregated interface:
	• **Role priority**—Role played by the interface. It can be one of the following:
	  ◦ **Actor**—Local device participating in LACP negotiation.
	  ◦ **Partner**—Remote device participating in LACP negotiation.
	  ◦ **System identifier**—48-bit (6-byte) globally unique field.
	  ◦ **System priority**—LACP system priority at the aggregated Ethernet interface level. This system priority value takes precedence over a system priority value configured at the global [edit chassis] hierarchy level.
	  ◦ **Port number**
	  ◦ **Port key**
	  ◦ **Port**
		All levels

LACP Statistics	LACP statistics are returned when the **extensive** option is used and provides the following information: • **LACP Rx**—LACP received counter that increments for each normal hello. • **LACP Tx**—Number of LACP transmit packet errors logged. • **Unknown Rx**—Number of unrecognized packet errors logged. • **Illegal Rx**—Number of invalid packets received.	All levels
Marker statistics	Marker statistics are returned when the **extensive** option is used and provides the following information: • **Marker Rx**—Marker received counter that increments for each normal hello. • **Resp Tx**—Number of RESP transmit packet errors logged. • **Unknown Rx**—Number of unrecognized packet errors logged. • **Illegal Rx**—Number of invalid packets received.	All levels
Protocol	Protocol family configured on the logical interface.	All levels
MTU	MTU size on the logical interface. If the MTU value is negotiated down to meet the MRRU requirement on the remote side, this value is marked Adjusted.	All levels
Generation	Unique number for use by Juniper Networks technical support only.	All levels
Route table	Routing table in which this address exists. For example, Route table:0 refers to inet.0.	All levels
Mesh table	Information regarding mesh topology.	All levels

Sample Output

show interfaces extensive satellite-device all

```
user@aggregation-device> show interfaces extensive satellite-device all
Physical interface: ae0 (Extended Port, Enabled, Physical link is Up
  Interface index: 128, SNMP ifIndex: 574, Generation: 131
  Link-level type: Ethernet, MTU: 1514, Speed: 2Gbps, BPDU Error: None, MAC-REWRITE
 Error: None, Loopback: Disabled, Source filtering: Disabled,
  Flow control: Disabled
  Pad to minimum frame size: Disabled
  Minimum links needed: 1, Minimum bandwidth needed: 1bps
  Device flags   : Present Running
  Interface flags: SNMP-Traps Internal: 0x4000
  Current address: f4:b5:2f:f7:3f:c0, Hardware address: f4:b5:2f:f7:3f:c0
  Last flapped   : 2015-03-31 18:36:43 PDT (07:05:56 ago)
  Statistics last cleared: Never
  Extended port information:
    Satellite device port id  : 415
  Traffic statistics:
   Input  bytes  :             13515908                 2032 bps
   Output bytes  :             12289920                 2032 bps
   Input  packets:                99514                    2 pps
   Output packets:                96015                    2 pps
   IPv6 transit statistics:
    Input  bytes  :                   0
    Output bytes  :                   0
    Input  packets:                   0
    Output packets:                   0
  Input errors:
    Errors: 0, Drops: 0, Framing errors: 0, Runts: 0, Giants: 0, Policed discards:
 0, Resource errors: 0
  Output errors:
    Carrier transitions: 0, Errors: 0, Drops: 0, MTU errors: 0, Resource errors:
 0
  Egress queues: 8 supported, 7 in use
  Queue counters:       Queued packets  Transmitted packets      Dropped packets

    0                                0                95867                    0

    1                                0                    0                    0

    2                                0                    0                    0

    3                                0                    0                    0

    4                                0                    0                    0

    5                                0                    0                    0

    7                                0                    0                    0

  Queue number:         Mapped forwarding classes
    0                   FC0
    1                   FC1
    2                   FC2
    3                   FC3
    4                   FC4
    5                   FC5, be-3
    7                   be-2
```

```
  Logical interface ae0.0 (Index 337) (SNMP ifIndex 575) (Generation 1194)
    Flags: Up SNMP-Traps 0x24024000 Encapsulation: Ethernet-Bridge
    Statistics        Packets        pps         Bytes          bps
    Bundle:
        Input :          1729          0        601692            0
        Output:             0          0             0            0
    Adaptive Statistics:
        Adaptive Adjusts:          0
        Adaptive Scans  :          0
        Adaptive Updates:          0
    Link:
      ge-104/0/24.0
        Input :             0          0             0            0
        Output:             0          0             0            0
      ge-103/0/0.0
        Input :          1729          0        601692            0
        Output:             0          0             0            0
    LACP info:        Role     System             System      Port    Port  Port

                            priority          identifier  priority  number   key

      ge-104/0/24.0    Actor      127  f4:b5:2f:f7:3f:c0       127      31     1

      ge-104/0/24.0  Partner      127  f4:b5:2f:41:0a:40       127      24     1

      ge-103/0/0.0    Actor      127  f4:b5:2f:f7:3f:c0       127       7     1

      ge-103/0/0.0  Partner      127  f4:b5:2f:41:0a:40       127       1     1

    LACP Statistics:       LACP Rx     LACP Tx   Unknown Rx   Illegal Rx
      ge-104/0/24.0          25470       25495            0            0
      ge-103/0/0.0           25469       25512            0            0
    Marker Statistics:   Marker Rx     Resp Tx   Unknown Rx   Illegal Rx
      ge-104/0/24.0              0           0            0            0
      ge-103/0/0.0               0           0            0            0
    Protocol bridge, MTU: 1514, Generation: 1229, Route table: 3, Mesh Group:
__all_ces__
Physical interface: ae1 (Extended Port, Enabled, Physical link is Up
  Interface index: 129, SNMP ifIndex: 790, Generation: 132
  Link-level type: Ethernet, MTU: 1514, Speed: 200mbps, BPDU Error: None,
MAC-REWRITE Error: None, Loopback: Disabled, Source filtering: Disabled,
  Flow control: Disabled
  Pad to minimum frame size: Disabled
  Minimum links needed: 1, Minimum bandwidth needed: 1bps
  Device flags   : Present Running
  Interface flags: SNMP-Traps Internal: 0x4000
  Current address: f4:b5:2f:f7:3f:c1, Hardware address: f4:b5:2f:f7:3f:c1
  Last flapped   : 2015-03-31 18:36:44 PDT (07:05:55 ago)
  Statistics last cleared: Never
  Extended port information:
    Satellite device port id  : 431
  Traffic statistics:
   Input  bytes  :            13285288                 2032 bps
   Output bytes  :            12166400                 2032 bps
   Input  packets:               98447                    2 pps
   Output packets:               95050                    2 pps
   IPv6 transit statistics:
    Input  bytes  :                  0
    Output bytes  :                  0
    Input  packets:                  0
```

```
   Output packets:                    0
 Input errors:
   Errors: 0, Drops: 0, Framing errors: 0, Runts: 0, Giants: 0, Policed discards:
0, Resource errors: 0
 Output errors:
   Carrier transitions: 0, Errors: 0, Drops: 0, MTU errors: 0, Resource errors:
0
 Egress queues: 8 supported, 7 in use
 Queue counters:       Queued packets  Transmitted packets      Dropped packets

   0                                0                94909                    0

   1                                0                    0                    0

   2                                0                    0                    0

   3                                0                    0                    0

   4                                0                    0                    0

   5                                0                    0                    0

   7                                0                    0                    0

 Queue number:         Mapped forwarding classes
   0                   FC0
   1                   FC1
   2                   FC2
   3                   FC3
   4                   FC4
   5                   FC5, be-3
   7                   be-2

 Logical interface ae1.0 (Index 338) (SNMP ifIndex 1216) (Generation 1195)
   Flags: Up SNMP-Traps 0x24024000 Encapsulation: Ethernet-Bridge
   Statistics        Packets        pps         Bytes          bps
   Bundle:
       Input :          2785          0        688380            0
       Output:             0          0             0            0
   Adaptive Statistics:
       Adaptive Adjusts:          0
       Adaptive Scans  :          0
       Adaptive Updates:          0
   Link:
     ge-104/0/25.0
       Input :            10          0           600            0
       Output:             0          0             0            0
     ge-103/0/1.0
       Input :          2775          0        687780            0
       Output:             0          0             0            0
   LACP info:        Role     System             System      Port    Port  Port

                           priority          identifier  priority  number   key

     ge-104/0/25.0    Actor      127  f4:b5:2f:f7:3f:c0       127      32     2

     ge-104/0/25.0  Partner      127  f4:b5:2f:41:0a:40       127      25     2

     ge-103/0/1.0    Actor      127  f4:b5:2f:f7:3f:c0       127       8     2

     ge-103/0/1.0  Partner      127  f4:b5:2f:41:0a:40       127       2     2
```

```
    LACP Statistics:       LACP Rx     LACP Tx   Unknown Rx   Illegal Rx
      ge-104/0/25.0          25470       25494            0            0
      ge-103/0/1.0           25469       25513            0            0
    Marker Statistics:   Marker Rx     Resp Tx   Unknown Rx   Illegal Rx
      ge-104/0/25.0             0           0            0            0
      ge-103/0/1.0              0           0            0            0
    Protocol bridge, MTU: 1514, Generation: 1230, Route table: 3, Mesh Group:
__all_ces__
Physical interface: ae0 (Extended Port, Enabled, Physical link is Up
  Interface index: 128, SNMP ifIndex: 574, Generation: 131
  Link-level type: Ethernet, MTU: 1514, Speed: 2Gbps, BPDU Error: None, MAC-REWRITE
 Error: None, Loopback: Disabled, Source filtering: Disabled,
  Flow control: Disabled
  Pad to minimum frame size: Disabled
  Minimum links needed: 1, Minimum bandwidth needed: 1bps
  Device flags   : Present Running
  Interface flags: SNMP-Traps Internal: 0x4000
  Current address: f4:b5:2f:f7:3f:c0, Hardware address: f4:b5:2f:f7:3f:c0
  Last flapped   : 2015-03-31 18:36:43 PDT (07:05:56 ago)
  Statistics last cleared: Never
  Extended port information:
    Satellite device port id  : 415
  Traffic statistics:
   Input  bytes  :             13515908                 2032 bps
   Output bytes  :             12289920                 2032 bps
   Input  packets:                99514                    2 pps
   Output packets:                96015                    2 pps
   IPv6 transit statistics:
    Input  bytes  :                   0
    Output bytes  :                   0
    Input  packets:                   0
    Output packets:                   0
  Input errors:
    Errors: 0, Drops: 0, Framing errors: 0, Runts: 0, Giants: 0, Policed discards:
 0, Resource errors: 0
  Output errors:
    Carrier transitions: 0, Errors: 0, Drops: 0, MTU errors: 0, Resource errors:
 0
  Egress queues: 8 supported, 7 in use
  Queue counters:       Queued packets  Transmitted packets      Dropped packets

    0                                0                95867                    0

    1                                0                    0                    0

    2                                0                    0                    0

    3                                0                    0                    0

    4                                0                    0                    0

    5                                0                    0                    0

    7                                0                    0                    0

  Queue number:         Mapped forwarding classes
    0                   FC0
    1                   FC1
    2                   FC2
    3                   FC3
```

```
    4                   FC4
    5                   FC5, be-3
    7                   be-2

  Logical interface ae0.0 (Index 337) (SNMP ifIndex 575) (Generation 1194)
    Flags: Up SNMP-Traps 0x24024000 Encapsulation: Ethernet-Bridge
    Statistics        Packets        pps         Bytes          bps
    Bundle:
        Input :          1729          0        601692            0
        Output:             0          0             0            0
    Adaptive Statistics:
        Adaptive Adjusts:          0
        Adaptive Scans  :          0
        Adaptive Updates:          0
    Link:
      ge-104/0/24.0
        Input :             0          0             0            0
        Output:             0          0             0            0
      ge-103/0/0.0
        Input :          1729          0        601692            0
        Output:             0          0             0            0
    LACP info:        Role     System             System      Port    Port  Port

                            priority          identifier  priority  number   key

      ge-104/0/24.0    Actor      127  f4:b5:2f:f7:3f:c0       127      31     1

      ge-104/0/24.0  Partner      127  f4:b5:2f:41:0a:40       127      24     1

      ge-103/0/0.0    Actor      127  f4:b5:2f:f7:3f:c0       127       7     1

      ge-103/0/0.0  Partner      127  f4:b5:2f:41:0a:40       127       1     1

    LACP Statistics:       LACP Rx     LACP Tx   Unknown Rx   Illegal Rx
      ge-104/0/24.0          25470       25495            0            0
      ge-103/0/0.0           25469       25512            0            0
    Marker Statistics:   Marker Rx     Resp Tx   Unknown Rx   Illegal Rx
      ge-104/0/24.0              0           0            0            0
      ge-103/0/0.0               0           0            0            0
    Protocol bridge, MTU: 1514, Generation: 1229, Route table: 3, Mesh Group:
__all_ces__
Physical interface: ae1 (Extended Port, Enabled, Physical link is Up
  Interface index: 129, SNMP ifIndex: 790, Generation: 132
  Link-level type: Ethernet, MTU: 1514, Speed: 200mbps, BPDU Error: None,
MAC-REWRITE Error: None, Loopback: Disabled, Source filtering: Disabled,
  Flow control: Disabled
  Pad to minimum frame size: Disabled
  Minimum links needed: 1, Minimum bandwidth needed: 1bps
  Device flags   : Present Running
  Interface flags: SNMP-Traps Internal: 0x4000
  Current address: f4:b5:2f:f7:3f:c1, Hardware address: f4:b5:2f:f7:3f:c1
  Last flapped   : 2015-03-31 18:36:44 PDT (07:05:55 ago)
  Statistics last cleared: Never
  Extended port information:
    Satellite device port id  : 431
  Traffic statistics:
   Input  bytes  :            13285288                 2032 bps
   Output bytes  :            12166400                 2032 bps
   Input  packets:               98447                    2 pps
   Output packets:               95050                    2 pps
   IPv6 transit statistics:
```

```
   Input  bytes  :                   0
   Output bytes  :                   0
   Input  packets:                   0
   Output packets:                   0
 Input errors:
  Errors: 0, Drops: 0, Framing errors: 0, Runts: 0, Giants: 0, Policed discards:
0, Resource errors: 0
 Output errors:
   Carrier transitions: 0, Errors: 0, Drops: 0, MTU errors: 0, Resource errors:
0
 Egress queues: 8 supported, 7 in use
 Queue counters:       Queued packets  Transmitted packets      Dropped packets

   0                                0                94909                    0

   1                                0                    0                    0

   2                                0                    0                    0

   3                                0                    0                    0

   4                                0                    0                    0

   5                                0                    0                    0

   7                                0                    0                    0

 Queue number:         Mapped forwarding classes
   0                   FC0
   1                   FC1
   2                   FC2
   3                   FC3
   4                   FC4
   5                   FC5, be-3
   7                   be-2

 Logical interface ae1.0 (Index 338) (SNMP ifIndex 1216) (Generation 1195)
   Flags: Up SNMP-Traps 0x24024000 Encapsulation: Ethernet-Bridge
   Statistics        Packets        pps         Bytes          bps
   Bundle:
       Input :          2785          0        688380            0
       Output:             0          0             0            0
   Adaptive Statistics:
       Adaptive Adjusts:          0
       Adaptive Scans  :          0
       Adaptive Updates:          0
   Link:
     ge-104/0/25.0
       Input :            10          0           600            0
       Output:             0          0             0            0
     ge-103/0/1.0
       Input :          2775          0        687780            0
       Output:             0          0             0            0
   LACP info:        Role     System            System      Port    Port  Port

                           priority         identifier  priority  number   key

     ge-104/0/25.0    Actor      127  f4:b5:2f:f7:3f:c0       127      32     2

     ge-104/0/25.0  Partner      127  f4:b5:2f:41:0a:40       127      25     2
```

```
      ge-103/0/1.0    Actor       127  f4:b5:2f:f7:3f:c0       127       8     2

      ge-103/0/1.0  Partner       127  f4:b5:2f:41:0a:40       127       2     2

    LACP Statistics:       LACP Rx     LACP Tx   Unknown Rx   Illegal Rx
      ge-104/0/25.0          25470       25494            0            0
      ge-103/0/1.0           25469       25513            0            0
    Marker Statistics:   Marker Rx     Resp Tx   Unknown Rx   Illegal Rx
      ge-104/0/25.0              0           0            0            0
      ge-103/0/1.0               0           0            0            0
    Protocol bridge, MTU: 1514, Generation: 1230, Route table: 3, Mesh Group:
__all_ces__

Physical interface: ae0 (Extended Port, Enabled, Physical link is Up
  Interface index: 128, SNMP ifIndex: 574, Generation: 131
  Link-level type: Ethernet, MTU: 1514, Speed: 2Gbps, BPDU Error: None, MAC-REWRITE
 Error: None, Loopback: Disabled, Source filtering: Disabled,
  Flow control: Disabled
  Pad to minimum frame size: Disabled
  Minimum links needed: 1, Minimum bandwidth needed: 1bps
  Device flags   : Present Running
  Interface flags: SNMP-Traps Internal: 0x4000
  Current address: f4:b5:2f:f7:3f:c0, Hardware address: f4:b5:2f:f7:3f:c0
  Last flapped   : 2015-03-31 18:36:43 PDT (07:05:56 ago)
  Statistics last cleared: Never
  Extended port information:
    Satellite device port id  : 415
  Traffic statistics:
   Input  bytes  :             13515908                 2032 bps
   Output bytes  :             12289920                 2032 bps
   Input  packets:                99514                    2 pps
   Output packets:                96015                    2 pps
   IPv6 transit statistics:
    Input  bytes  :                   0
    Output bytes  :                   0
    Input  packets:                   0
    Output packets:                   0
  Input errors:
    Errors: 0, Drops: 0, Framing errors: 0, Runts: 0, Giants: 0, Policed discards:
 0, Resource errors: 0
  Output errors:
    Carrier transitions: 0, Errors: 0, Drops: 0, MTU errors: 0, Resource errors:
 0
  Egress queues: 8 supported, 7 in use
  Queue counters:       Queued packets  Transmitted packets      Dropped packets

    0                                0                95867                    0

    1                                0                    0                    0

    2                                0                    0                    0

    3                                0                    0                    0

    4                                0                    0                    0

    5                                0                    0                    0

    7                                0                    0                    0

  Queue number:         Mapped forwarding classes
```

```
    0                   FC0
    1                   FC1
    2                   FC2
    3                   FC3
    4                   FC4
    5                   FC5, be-3
    7                   be-2

  Logical interface ae0.0 (Index 337) (SNMP ifIndex 575) (Generation 1194)
    Flags: Up SNMP-Traps 0x24024000 Encapsulation: Ethernet-Bridge
    Statistics        Packets        pps         Bytes          bps
    Bundle:
        Input :          1729          0        601692            0
        Output:             0          0             0            0
    Adaptive Statistics:
        Adaptive Adjusts:          0
        Adaptive Scans  :          0
        Adaptive Updates:          0
    Link:
      ge-104/0/24.0
        Input :             0          0             0            0
        Output:             0          0             0            0
      ge-103/0/0.0
        Input :          1729          0        601692            0
        Output:             0          0             0            0
    LACP info:        Role     System             System      Port    Port  Port

                            priority          identifier  priority  number   key

      ge-104/0/24.0    Actor      127  f4:b5:2f:f7:3f:c0       127      31     1

      ge-104/0/24.0  Partner      127  f4:b5:2f:41:0a:40       127      24     1

      ge-103/0/0.0    Actor       127  f4:b5:2f:f7:3f:c0       127       7     1

      ge-103/0/0.0  Partner       127  f4:b5:2f:41:0a:40       127       1     1

    LACP Statistics:       LACP Rx     LACP Tx   Unknown Rx   Illegal Rx
      ge-104/0/24.0          25470       25495            0            0
      ge-103/0/0.0           25469       25512            0            0
    Marker Statistics:   Marker Rx     Resp Tx   Unknown Rx   Illegal Rx
      ge-104/0/24.0              0           0            0            0
      ge-103/0/0.0               0           0            0            0
    Protocol bridge, MTU: 1514, Generation: 1229, Route table: 3, Mesh Group:
__all_ces__
Physical interface: ae1 (Extended Port, Enabled, Physical link is Up
  Interface index: 129, SNMP ifIndex: 790, Generation: 132
  Link-level type: Ethernet, MTU: 1514, Speed: 200mbps, BPDU Error: None,
MAC-REWRITE Error: None, Loopback: Disabled, Source filtering: Disabled,
  Flow control: Disabled
  Pad to minimum frame size: Disabled
  Minimum links needed: 1, Minimum bandwidth needed: 1bps
  Device flags   : Present Running
  Interface flags: SNMP-Traps Internal: 0x4000
  Current address: f4:b5:2f:f7:3f:c1, Hardware address: f4:b5:2f:f7:3f:c1
  Last flapped   : 2015-03-31 18:36:44 PDT (07:05:55 ago)
  Statistics last cleared: Never
  Extended port information:
    Satellite device port id  : 431
  Traffic statistics:
   Input  bytes  :             13285288                 2032 bps
```



```
  Output bytes  :             12166400                 2032 bps
  Input  packets:                98447                    2 pps
  Output packets:                95050                    2 pps
  IPv6 transit statistics:
   Input  bytes  :                   0
   Output bytes  :                   0
   Input  packets:                   0
   Output packets:                   0
 Input errors:
  Errors: 0, Drops: 0, Framing errors: 0, Runts: 0, Giants: 0, Policed discards:
0, Resource errors: 0
 Output errors:
  Carrier transitions: 0, Errors: 0, Drops: 0, MTU errors: 0, Resource errors:
0
 Egress queues: 8 supported, 7 in use
 Queue counters:       Queued packets  Transmitted packets      Dropped packets

   0                                0                94909                    0

   1                                0                    0                    0

   2                                0                    0                    0

   3                                0                    0                    0

   4                                0                    0                    0

   5                                0                    0                    0

   7                                0                    0                    0

 Queue number:         Mapped forwarding classes
   0                   FC0
   1                   FC1
   2                   FC2
   3                   FC3
   4                   FC4
   5                   FC5, be-3
   7                   be-2

 Logical interface ae1.0 (Index 338) (SNMP ifIndex 1216) (Generation 1195)
   Flags: Up SNMP-Traps 0x24024000 Encapsulation: Ethernet-Bridge
   Statistics        Packets        pps         Bytes          bps
   Bundle:
       Input :          2785          0        688380            0
       Output:             0          0             0            0
   Adaptive Statistics:
       Adaptive Adjusts:          0
       Adaptive Scans  :          0
       Adaptive Updates:          0
   Link:
     ge-104/0/25.0
       Input :            10          0           600            0
       Output:             0          0             0            0
     ge-103/0/1.0
       Input :          2775          0        687780            0
       Output:             0          0             0            0
   LACP info:        Role     System            System      Port    Port  Port

                             priority         identifier  priority  number   key
```

```
      ge-104/0/25.0    Actor      127  f4:b5:2f:f7:3f:c0       127      32     2

      ge-104/0/25.0  Partner      127  f4:b5:2f:41:0a:40       127      25     2

      ge-103/0/1.0    Actor       127  f4:b5:2f:f7:3f:c0       127       8     2

      ge-103/0/1.0  Partner       127  f4:b5:2f:41:0a:40       127       2     2

    LACP Statistics:       LACP Rx     LACP Tx   Unknown Rx   Illegal Rx
      ge-104/0/25.0          25470       25494            0            0
      ge-103/0/1.0           25469       25513            0            0
    Marker Statistics:   Marker Rx     Resp Tx   Unknown Rx   Illegal Rx
      ge-104/0/25.0              0           0            0            0
      ge-103/0/1.0               0           0            0            0
    Protocol bridge, MTU: 1514, Generation: 1230, Route table: 3, Mesh Group:
__all_ces__
Physical interface: ge-101/0/7 (Extended Port, Enabled, Physical link is Down
  Interface index: 328, SNMP ifIndex: 1587, Generation: 331
  Link-level type: Ethernet, MTU: 1514, LAN-PHY mode, Speed: 1000mbps
  Device flags   : Present Running
  Interface flags: Hardware-Down SNMP-Traps Internal: 0x4000
  Link flags     : None
  CoS queues     : 8 supported, 8 maximum usable queues
  Hold-times     : Up 0 ms, Down 0 ms
  Damping        : half-life: 0 sec, max-suppress: 0 sec, reuse: 0, suppress: 0,
 state: unsuppressed
  Current address: 10:0e:7e:bf:2d:0c, Hardware address: 10:0e:7e:bf:2d:0c
  Last flapped   : Never
  Statistics last cleared: Never
  Extended port information:
    Satellite device port id  : 143
  Traffic statistics:
   Input  bytes  :                   0                    0 bps
   Output bytes  :                   0                    0 bps
   Input  packets:                   0                    0 pps
   Output packets:                   0                    0 pps
   IPv6 transit statistics:
    Input  bytes  :                  0
    Output bytes  :                  0
    Input  packets:                  0
    Output packets:                  0
  Input errors:
    Errors: 0, Drops: 0, Framing errors: 0, Runts: 0, Policed discards: 0, L3
incompletes: 0, L2 channel errors: 0, L2 mismatch timeouts: 0, FIFO errors: 0,
    Resource errors: 0
  Output errors:
    Carrier transitions: 0, Errors: 0, Drops: 0, Collisions: 0, Aged packets: 0,
 FIFO errors: 0, HS link CRC errors: 0, MTU errors: 0, Resource errors: 0
  Egress queues: 8 supported, 7 in use
  Queue counters:       Queued packets  Transmitted packets      Dropped packets

    0                                0                    0                    0

    1                                0                    0                    0

    2                                0                    0                    0

    3                                0                    0                    0

    4                                0                    0                    0
```

```
    5                                0                    0                    0

    7                                0                    0                    0

  Queue number:         Mapped forwarding classes
    0                   FC0
    1                   FC1
    2                   FC2
    3                   FC3
    4                   FC4
    5                   FC5, be-3
    7                   be-2
  Active alarms  : None
  Active defects : None
  MAC statistics:                      Receive         Transmit
    Total octets                             0                0
    Total packets                            0                0
    Unicast packets                          0                0
    Broadcast packets                        0                0
    Multicast packets                        0                0
    CRC/Align errors                         0                0
    FIFO errors                              0                0
    MAC control frames                       0                0
    MAC pause frames                         0                0
    Oversized frames                         0
    Jabber frames                            0
    Fragment frames                          0
    VLAN tagged frames                       0
    Code violations                          0
    Total errors                             0                0
  Filter statistics:
    Input packet count                       0
    Input packet rejects                     0
    Input DA rejects                         0
    Input SA rejects                         0
    Output packet count                                       0
    Output packet pad count                                   0
    Output packet error count                                 0
    CAM destination filters: 0, CAM source filters: 0
  Packet Forwarding Engine configuration:
    Destination slot: 0 (0x00)
  CoS information:
    Direction : Output
    CoS transmit queue               Bandwidth               Buffer Priority
Limit
                              %            bps     %           usec
    0 FC0                    95      950000000    95              0      low
none
    3 FC3                     5       50000000     5              0      low
none
  Interface transmit statistics: Disabled

Physical interface: ge-101/0/8 (Extended Port, Enabled, Physical link is Down
  Interface index: 329, SNMP ifIndex: 1586, Generation: 332
  Link-level type: Ethernet, MTU: 1514, LAN-PHY mode, Speed: 1000mbps
  Device flags   : Present Running
  Interface flags: Hardware-Down SNMP-Traps Internal: 0x4000
  Link flags     : None
  CoS queues     : 8 supported, 8 maximum usable queues
  Hold-times     : Up 0 ms, Down 0 ms
  Damping        : half-life: 0 sec, max-suppress: 0 sec, reuse: 0, suppress: 0,
```

```
 state: unsuppressed
  Current address: 10:0e:7e:bf:2d:0d, Hardware address: 10:0e:7e:bf:2d:0d
  Last flapped   : Never
  Statistics last cleared: Never
  Extended port information:
    Satellite device port id  : 159
  Traffic statistics:
   Input  bytes  :                   0                   0 bps
   Output bytes  :                   0                   0 bps
   Input  packets:                   0                   0 pps
   Output packets:                   0                   0 pps
   IPv6 transit statistics:
    Input  bytes  :                  0
    Output bytes  :                  0
    Input  packets:                  0
    Output packets:                  0
  Input errors:
    Errors: 0, Drops: 0, Framing errors: 0, Runts: 0, Policed discards: 0, L3
incompletes: 0, L2 channel errors: 0, L2 mismatch timeouts: 0, FIFO errors: 0,
    Resource errors: 0
  Output errors:
    Carrier transitions: 0, Errors: 0, Drops: 0, Collisions: 0, Aged packets: 0,
 FIFO errors: 0, HS link CRC errors: 0, MTU errors: 0, Resource errors: 0
  Egress queues: 8 supported, 7 in use
  Queue counters:       Queued packets  Transmitted packets      Dropped packets

    0                                0                   0                    0

    1                                0                   0                    0

    2                                0                   0                    0

    3                                0                   0                    0

    4                                0                   0                    0

    5                                0                   0                    0

    7                                0                   0                    0

  Queue number:         Mapped forwarding classes
    0                   FC0
    1                   FC1
    2                   FC2
    3                   FC3
    4                   FC4
    5                   FC5, be-3
    7                   be-2
  Active alarms  : None
  Active defects : None
  MAC statistics:                      Receive         Transmit
    Total octets                             0                0
    Total packets                            0                0
    Unicast packets                          0                0
    Broadcast packets                        0                0
    Multicast packets                        0                0
    CRC/Align errors                         0                0
    FIFO errors                              0                0
    MAC control frames                       0                0
    MAC pause frames                         0                0
    Oversized frames                         0
```

```
    Jabber frames                           0
    Fragment frames                         0
    VLAN tagged frames                      0
    Code violations                         0
    Total errors                            0                0
  Filter statistics:
    Input packet count                      0
    Input packet rejects                    0
    Input DA rejects                        0
    Input SA rejects                        0
    Output packet count                                      0
    Output packet pad count                                  0
    Output packet error count                                0
    CAM destination filters: 0, CAM source filters: 0
  Packet Forwarding Engine configuration:
    Destination slot: 0 (0x00)
  CoS information:
    Direction : Output
    CoS transmit queue               Bandwidth               Buffer Priority
Limit
                              %            bps     %           usec
    0 FC0                    95      950000000    95              0      low
none
    3 FC3                     5       50000000     5              0      low
none
  Interface transmit statistics: Disabled
```

show interfaces satellite-device

Syntax show interfaces satellite-device (device-alias | all)

Release Information Command introduced in Junos OS Release 14.2R3 for Junos Fusion Provider Edge.
Command introduced in Junos OS Release 16.1R1 for Junos Fusion Enterprise.
Command introduced in Junos OS Release 17.2R1 for Junos Fusion Data Center.

Description Display the satellite device extended ports in a Junos Fusion.

Options **device-alias *device-alias***—Display extended port information for the satellite device using the specified device alias only.

all—Display information for all extended ports and aggregated Ethernet interfaces with extended ports as members configured on all of the satellite devices.

Required Privilege Level view

Related Documentation
- *Configuring or Expanding a Junos Fusion Enterprise*

List of Sample Output show interfaces satellite-device all on page 814

Output Fields Table 36 on page 812 lists the output fields for the **show interfaces satellite-device** command. Output fields are listed in the approximate order in which they appear.

Table 36: show interfaces satellite-device Output Fields

Field Name	Field Description	Level of Output
Physical Interface		
Physical interface	Name of the physical interface.	All levels
Interface index	Index number of the physical interface, which reflects its initialization sequence.	**detail extensive** none
Link-level type	Encapsulation being used on the physical interface.	All levels
Device flags	Information about the physical device.	All levels
Flow control	Flow control status: **Enabled** or **Disabled**. NOTE: This field is only displayed if asymmetric flow control is not configured.	All levels
Pad to minimum frame size	Pad Tx VLAN-tagged frame to minimum of 68 bytes.	All levels

Table 36: show interfaces satellite-device Output Fields (continued)

Field Name	Field Description	Level of Output
Minimum links needed	Minimum number of aggregated links.	All levels
Minimum bandwidth needed	Minimum bandwidth configured for aggregated bundle.	All levels
Device flags	Information about the physical device.	All levels
Interface flags	Information about the interface.	All levels
Current address	Configured MAC address.	**detail extensive** none
Last flapped	Date, time, and how long ago the interface went from down to up. The format is **Last flapped:** ***year-month-day hour: :minute:second:timezone*** **(*hour:minute:second* ago)**. For example, **Last flapped: 2008–01–16 10:52:40 UTC (3d 22:58 ago).**	**detail extensive** none
Input rate	Input rate in bits per second (bps) and packets per second (pps). The value in this field also includes the Layer 2 overhead bytes for ingress traffic on Ethernet interfaces if you enable accounting of Layer 2 overhead at the PIC level or the logical interface level.	All levels
Output rate	Output rate in bps and pps. The value in this field also includes the Layer 2 overhead bytes for egress traffic on Ethernet interfaces if you enable accounting of Layer 2 overhead at the PIC level or the logical interface level.	All levels
Extended port information	Satellite device port ID	All levels
Active alarms and Active defects	Ethernet-specific defects that can prevent the interface from passing packets. When a defect persists for a certain amount of time, it is promoted to an alarm. Based on the switch configuration, an alarm can ring the red or yellow alarm bell on the switch, or turn on the red or yellow alarm LED on the craft interface. These fields can contain the value **None** or **Link**. • **None**—There are no active defects or alarms. • **Link**—Interface has lost its link state, which usually means that the cable is unplugged, the far-end system has been turned off, or the PIC is malfunctioning.	**detail extensive** none
Interface transmit statistics	All levels	All levels
Logical Interface		
Logical interface	Name of the logical interface.	All levels
Index	Index number of the logical interface, which reflects its initialization sequence.	**detail extensive** none
SNMP ifIndex	SNMP interface index number for the logical interface.	**detail extensive** none
Generation	Unique number for use by Juniper Networks technical support only.	**detail extensive**

Table 36: show interfaces satellite-device Output Fields (continued)

Field Name	Field Description	Level of Output
Flags	Information about the logical interface.	All levels
Statistics	• **Packets** • **pps** • **Bytes** • **bps**	All levels

Bundle	Provides information for each active bundle link.
	• **Input**
	  • **Packets**
	  • **pps**
	  • **Bytes**
	  • **bps**
	  • **Output**
	  • **Packets—**
	  • **pps**
	  • **Bytes**
	  • **bps**
		All levels

Adaptive Statistics	• **Adaptive Adjusts** • **Adaptive Scans** • **Adaptive Updates**	All levels
Protocol	Protocol family configured on the logical interface.	All levels

Sample Output

Sample Output

show interfaces satellite-device all

```
user@aggregation-device> show interfaces satellite-device all
Physical interface: ae0 (Extended Port, Enabled, Physical link is Up
  Interface index: 128, SNMP ifIndex: 574
  Link-level type: Ethernet, MTU: 1514, Speed: 2Gbps, BPDU Error: None, MAC-REWRITE
 Error: None, Loopback: Disabled, Source filtering: Disabled,
  Flow control: Disabled
  Pad to minimum frame size: Disabled
  Minimum links needed: 1, Minimum bandwidth needed: 1bps
  Device flags   : Present Running
  Interface flags: SNMP-Traps Internal: 0x4000
  Current address: f4:b5:2f:f7:3f:c0, Hardware address: f4:b5:2f:f7:3f:c0
  Last flapped   : 2015-03-31 18:36:43 PDT (06:54:08 ago)
  Input rate     : 2032 bps (2 pps)
  Output rate    : 3048 bps (2 pps)

  Logical interface ae0.0 (Index 337) (SNMP ifIndex 575)
    Flags: Up SNMP-Traps 0x24024000 Encapsulation: Ethernet-Bridge
```

```
    Statistics        Packets        pps         Bytes          bps
    Bundle:
        Input :          1704          0        592992            0
        Output:             0          0             0            0
    Adaptive Statistics:
        Adaptive Adjusts:          0
        Adaptive Scans  :          0
        Adaptive Updates:          0
    Protocol bridge, MTU: 1514

Physical interface: ae1 (Extended Port, Enabled, Physical link is Up
  Interface index: 129, SNMP ifIndex: 790
  Link-level type: Ethernet, MTU: 1514, Speed: 200mbps, BPDU Error: None,
MAC-REWRITE Error: None, Loopback: Disabled, Source filtering: Disabled,
  Flow control: Disabled
  Pad to minimum frame size: Disabled
  Minimum links needed: 1, Minimum bandwidth needed: 1bps
  Device flags   : Present Running
  Interface flags: SNMP-Traps Internal: 0x4000
  Current address: f4:b5:2f:f7:3f:c1, Hardware address: f4:b5:2f:f7:3f:c1
  Last flapped   : 2015-03-31 18:36:44 PDT (06:54:07 ago)
  Input rate     : 2032 bps (2 pps)
  Output rate    : 2032 bps (2 pps)

  Logical interface ae1.0 (Index 338) (SNMP ifIndex 1216)
    Flags: Up SNMP-Traps 0x24024000 Encapsulation: Ethernet-Bridge
    Statistics        Packets        pps         Bytes          bps
    Bundle:
        Input :          2759          0        679982            0
        Output:             0          0             0            0
    Adaptive Statistics:
        Adaptive Adjusts:          0
        Adaptive Scans  :          0
        Adaptive Updates:          0
    Protocol bridge, MTU: 1514
Physical interface: xe-101/0/31 (Extended Port, Enabled, Physical link is Up
  Interface index: 336, SNMP ifIndex: 829
  Link-level type: Ethernet, MTU: 1514, LAN-PHY mode, Speed: 10Gbps
  Device flags   : Present Running
  Interface flags: SNMP-Traps Internal: 0x4000
  Link flags     : None
  CoS queues     : 8 supported, 8 maximum usable queues
  Current address: 10:0e:7e:bf:2d:24, Hardware address: 10:0e:7e:bf:2d:24
  Last flapped   : 2015-03-31 08:28:23 PDT (17:02:29 ago)
  Input rate     : 0 bps (0 pps)
  Output rate    : 0 bps (0 pps)
  Active alarms  : None
  Active defects : None
  Interface transmit statistics: Disabled

  Logical interface xe-101/0/31.0 (Index 491) (SNMP ifIndex 926)
    Flags: Up SNMP-Traps 0x24024000 Encapsulation: Ethernet-Bridge
    Input packets : 0
    Output packets: 0
    Protocol bridge, MTU: 1514

Physical interface: xe-101/0/32 (Extended Port, Enabled, Physical link is Up
  Interface index: 337, SNMP ifIndex: 836
  Link-level type: Ethernet, MTU: 1514, LAN-PHY mode, Speed: 10Gbps
  Device flags   : Present Running
  Interface flags: SNMP-Traps Internal: 0x4000
```

```
Link flags     : None
CoS queues     : 8 supported, 8 maximum usable queues
Current address: 10:0e:7e:bf:2d:25, Hardware address: 10:0e:7e:bf:2d:25
Last flapped   : 2015-03-31 08:28:23 PDT (17:02:29 ago)
Input rate     : 0 bps (0 pps)
Output rate    : 0 bps (0 pps)
Active alarms  : None
Active defects : None
Interface transmit statistics: Disabled

Logical interface xe-101/0/32.0 (Index 492) (SNMP ifIndex 935)
  Flags: Up SNMP-Traps 0x24024000 Encapsulation: Ethernet-Bridge
  Input packets : 0
  Output packets: 0
  Protocol bridge, MTU: 1514
```

show interfaces statistics

Syntax

show interfaces statistics *interface-name*
<satellite-device [*device-alias-name* |all]>
<detail>

Release Information

Command introduced before Junos OS Release 7.4.
Command introduced in Junos OS Release 12.1X48 for PTX Series Packet Transport Routers.
Command introduced in Junos OS Release 12.2 for ACX Series Routers.
satellite-device option introduced in Junos OS Release 14.2R3.

Description

Display static interface statistics, such as errors.

NOTE: When the **show interfaces statistics** command is executed on an interface that is configured on T4000 Type 5 FPC, the *IPv6 transit statistics* field displays:

- Total statistics (sum of transit and local statistics) at the physical interface level
- Transit statistics at the logical interface level

Options

interface-name—Name of an interface.

satellite-device [*device-alias-name* | all]—(Junos Fusion only) (Optional) Display interface statistics for interfaces on the specified satellite device in the Junos Fusion, or on all satellite devices in the Junos Fusion.

NOTE: In a Junos Fusion Enterprise, logical interface statistics are not synced across aggregation devices in a dual-aggregation device topology.

detail—(Optional) Display detailed output.

Required Privilege Level

view

Related Documentation

- *clear interfaces statistics*

List of Sample Output

show interfaces statistics (Fast Ethernet) on page 818
show interfaces statistics (Gigabit Ethernet PIC—Egress) on page 819

show interfaces statistics detail (Aggregated Ethernet) on page 820
show interfaces statistics detail (Aggregated Ethernet—Ingress) on page 822
show interfaces statistics detail (Aggregated Ethernet—Egress) on page 823
show interfaces statistics (SONET/SDH) on page 824
show interfaces statistics (Aggregated SONET/SDH—Ingress) on page 825
show interfaces statistics (Aggregated SONET/SDH—Egress) on page 826
show interfaces statistics (MX Series Routers) on page 827
show interfaces statistics (PTX Series Packet Transport Routers) on page 828
show interfaces statistics (ACX Series routers) on page 828

Output Fields Output from both the **show interfaces *interface-name* detail** and the **show interfaces *interface-name* extensive** commands include all the information displayed in the output from the **show interfaces statistics** command. For more information, see the particular interface type in which you are interested. For information about destination class and source class statistics, see the "Destination Class Field" section and the "Source Class Field" section under *Common Output Fields Description*. For information about the input errors and output errors, see *Fast Ethernet and Gigabit Ethernet Counters*.

Sample Output

show interfaces statistics (Fast Ethernet)

```
user@host> show interfaces fe-1/3/1 statistics
Physical interface: fe-1/3/1, Enabled, Physical link is Up
  Interface index: 144, SNMP ifIndex: 1042
  Description: ford fe-1/3/1
  Link-level type: Ethernet, MTU: 1514, Speed: 100mbps, Loopback: Disabled,
  Source filtering: Disabled, Flow control: Enabled
  Device flags   : Present Running
  Interface flags: SNMP-Traps Internal: 0x4000
  CoS queues     : 4 supported, 4 maximum usable queues
  Current address: 00:00:5E:00:53:dc, Hardware address: 00:00:5E:00:53:dc
  Last flapped   : 2006-04-18 03:08:59 PDT (00:01:24 ago)
  Statistics last cleared: Never
  Input rate     : 0 bps (0 pps)
  Output rate    : 0 bps (0 pps)
  Input errors: 0, Output errors: 0
  Active alarms  : None
  Active defects : None
  Logical interface fe-1/3/1.0 (Index 69) (SNMP ifIndex 50)
    Flags: SNMP-Traps Encapsulation: ENET2
    Protocol inet, MTU: 1500
      Flags: Is-Primary, DCU, SCU-in
                                                Packets                Bytes
      Destination class            (packet-per-second)    (bits-per-second)
                        silver1                    0                    0
                                (                  0) (                  0)
                        silver2                    0                    0
                                (                  0) (                  0)
                        silver3                    0                    0
                                (                  0) (                  0)
      Addresses, Flags: Is-Default Is-Preferred Is-Primary
        Destination: 10.27.245/24, Local: 10.27.245.2,
        Broadcast: 10.27.245.255
    Protocol iso, MTU: 1497
      Flags: Is-Primary
```


show interfaces statistics (Gigabit Ethernet PIC—Egress)

```
user@host> show interfaces ge-5/2/0 statistics detail
Physical interface: ge-5/2/0, Enabled, Physical link is Up
  Interface index: 146, SNMP ifIndex: 519, Generation: 149
  Link-level type: Ethernet, MTU: 1514, Speed: 1000mbps, BPDU Error: None,
MAC-REWRITE Error: None, Loopback: Disabled,
  Source filtering: Disabled, Flow control: Enabled, Auto-negotiation: Enabled,
Remote fault: Online
  Device flags   : Present Running
  Interface flags: SNMP-Traps Internal: 0x4000
  Link flags     : None
  CoS queues     : 8 supported, 8 maximum usable queues
  Hold-times     : Up 0 ms, Down 0 ms
  Current address: 00:00:5E:00:53:74, Hardware address: 00:00:5E:00:53:74
  Last flapped   : 2009-11-11 11:24:00 PST (09:23:08 ago)
  Statistics last cleared: 2009-11-11 17:50:58 PST (02:56:10 ago)
  Traffic statistics:
   Input  bytes  :               271524                    0 bps
   Output bytes  :             37769598                  352 bps
   Input  packets:                 3664                    0 pps
   Output packets:               885790                    0 pps
   IPv6 transit statistics:
    Input  bytes  :                   0
    Output bytes  :            16681118
    Input  packets:                   0
    Output packets:              362633
   Multicast statistics:
    IPV4 multicast statistics:
     Input  bytes  :               112048                    0 bps
     Output bytes  :             20779920                    0 bps
     Input  packets:                 1801                    0 pps
     Output packets:               519498                    0 pps
    IPV6 multicast statistics:
     Input  bytes  :               156500                    0 bps
     Output bytes  :             16681118                    0 bps
     Input  packets:                 1818                    0 pps
     Output packets:               362633                    0 pps
  Input errors:
    Errors: 0, Drops: 0, Framing errors: 0, Runts: 0, Policed discards: 0, L3
incompletes: 0, L2 channel errors: 0,
    L2 mismatch timeouts: 0, FIFO errors: 0, Resource errors: 0
  Output errors:
    Carrier transitions: 0, Errors: 0, Drops: 0, Collisions: 0, Aged packets: 0,
 FIFO errors: 0, HS link CRC errors: 0, MTU errors: 0,
    Resource errors: 0
  Egress queues: 8 supported, 4 in use
  Queue counters:       Queued packets  Transmitted packets      Dropped packets

    0 best-effort               882558               882558                    0

    1 expedited-fo                   0                    0                    0

    2 assured-forw                   0                    0                    0

    3 network-cont                3232                 3232                    0

  Active alarms  : None
  Active defects : None
```

```
  Logical interface ge-5/2/0.0 (Index 71) (SNMP ifIndex 573) (Generation 135)
    Flags: SNMP-Traps 0x4000 Encapsulation: ENET2
    Egress account overhead: 100
    Ingress account overhead: 90
    Traffic statistics:
     Input  bytes  :               271524
     Output bytes  :             37769598
     Input  packets:                 3664
     Output packets:               885790
     IPv6 transit statistics:
      Input  bytes  :                   0
      Output bytes  :            16681118
      Input  packets:                   0
      Output packets:              362633
    Local statistics:
     Input  bytes  :               271524
     Output bytes  :               308560
     Input  packets:                 3664
     Output packets:                 3659
    Transit statistics:
     Input  bytes  :                   0                    0 bps
     Output bytes  :             37461038                    0 bps
     Input  packets:                   0                    0 pps
     Output packets:               882131                    0 pps
     IPv6 transit statistics:
      Input  bytes  :                   0
      Output bytes  :            16681118
      Input  packets:                   0
      Output packets:              362633
    Multicast statistics:
     IPV4 multicast statistics:
      Input  bytes  :               112048                    0 bps
      Output bytes  :             20779920                    0 bps
      Input  packets:                 1801                    0 pps
      Output packets:               519498                    0 pps
     IPV6 multicast statistics:
      Input  bytes  :               156500                    0 bps
      Output bytes  :             16681118                    0 bps
      Input  packets:                 1818                    0 pps
      Output packets:               362633                    0 pps
    Protocol inet, MTU: 1500, Generation: 151, Route table: 0
      Addresses, Flags: Is-Preferred Is-Primary
        Destination: 10.40.40.0/30, Local: 10.40.40.2, Broadcast: 10.40.40.3,
Generation: 167
    Protocol inet6, MTU: 1500, Generation: 152, Route table: 0
      Addresses, Flags: Is-Preferred Is-Primary
        Destination: ::10.40.40.0/126, Local: ::10.40.40.2
    Generation: 169
      Addresses, Flags: Is-Preferred
        Destination: fe80::/64, Local: fe80::21d:b5ff:fe61:d974
    Protocol multiservice, MTU: Unlimited, Generation: 171
    Generation: 153, Route table: 0
      Policer: Input: __default_arp_policer__
```

show interfaces statistics detail (Aggregated Ethernet)

```
user@host> show interfaces ae0 detail
Physical interface: ae0, Enabled, Physical link is Up
  Interface index: 186, SNMP ifIndex: 111, Generation: 187
  Link-level type: Ethernet, MTU: 1514, Speed: 2000mbps, Loopback: Disabled,
```



```
Source filtering: Disabled, Flow control: Disabled, Minimum links needed: 1,
Minimum bandwidth needed: 0
Device flags   : Present Running
Interface flags: SNMP-Traps Internal: 0x4000
Current address: 00:00:5E:0053:f0, Hardware address: 00:00:5E:00:53:f0
Last flapped   : Never
Statistics last cleared: 2006-12-23 03:04:16 PST (01:16:24 ago)
Traffic statistics:
 Input  bytes  :               28544                    0 bps
 Output bytes  :               39770                    0 bps
 Input  packets:                 508                    0 pps
 Output packets:                 509                    0 pps
 Input  bytes  :           IPv6 28544
 Output bytes  :               IPv6 0
 Input  packets:             IPv6 508
 Output packets:               IPv6 0
Input errors:
  Errors: 0, Drops: 0, Framing errors: 0, Runts: 0, Giants: 0,
  Policed discards: 0, Resource errors: 0
Output errors:
  Carrier transitions: 0, Errors: 0, Drops: 0, MTU errors: 0,
  Resource errors: 0

Logical interface ae0.0 (Index 67) (SNMP ifIndex 139) (Generation 145)
  Flags: SNMP-Traps Encapsulation: ENET2
  Statistics        Packets        pps         Bytes          bps
  Bundle:
      Input :           508          0         28544            0
      Output:           509          0         35698            0
  Link:
    ge-3/3/8.0
      Input :           508          0         28544            0
      Output:             0          0             0            0
    ge-3/3/9.0
      Input :             0          0             0            0
      Output:             0          0             0            0
  Marker Statistics:   Marker Rx     Resp Tx   Unknown Rx   Illegal Rx
    ge-3/3/8.0                0           0            0            0
    ge-3/3/9.0                0           0            0            0
Egress queues: 8 supported, 8 in use
Queue counters:       Queued packets  Transmitted packets      Dropped packets

  0 best-effort                    0                    0                    0

  1 expedited-fo                   0                    0                    0

  2 assured-forw                   0                    0                    0

  3 network-cont                   0                    0                    0

  Protocol inet, MTU: 1500, Generation: 166, Route table: 0
    Flags: None
    Addresses, Flags: Is-Preferred Is-Primary
      Destination: 10.1.1/24, Local: 10.1.1.1, Broadcast: 10.1.1.255,
      Generation: 159
  Protocol inet6, MTU: 1500, Generation: 163, Route table: 0
    Flags: Is-Primary
    Addresses, Flags: Is-Preferred
      Destination: fe80::/64, Local: fe80::206:5bff:fe05:c321,
      Broadcast: Unspecified, Generation: 161
```

show interfaces statistics detail (Aggregated Ethernet—Ingress)

```
user@host> show interfaces statistics detail ae0 | no-more
Physical interface: ae0, Enabled, Physical link is Up
  Interface index: 128, SNMP ifIndex: 504, Generation: 278
  Link-level type: Ethernet, MTU: 1514, Speed: 1Gbps, BPDU Error: None, MAC-REWRITE
 Error: None, Loopback: Disabled,
  Source filtering: Disabled, Flow control: Disabled, Minimum links needed: 1,
Minimum bandwidth needed: 0
  Device flags   : Present Running
  Interface flags: SNMP-Traps Internal: 0x4000
  Current address: 00:00:5E:00:53:f0, Hardware address: 00:00:5E:00:53:f0
  Last flapped   : 2009-11-09 03:30:23 PST (00:01:28 ago)
  Statistics last cleared: 2009-11-09 03:26:18 PST (00:05:33 ago)
  Traffic statistics:
   Input  bytes  :           544009602             54761856 bps
   Output bytes  :                3396                    0 bps
   Input  packets:            11826292               148809 pps
   Output packets:                  42                    0 pps
   IPv6 transit statistics:
    Input  bytes  :          350818604
    Output bytes  :                  0
    Input  packets:            7626488
    Output packets:                  0
  Input errors:
    Errors: 0, Drops: 0, Framing errors: 0, Runts: 0, Giants: 0, Policed discards:
 0, Resource errors: 0
  Output errors:
    Carrier transitions: 0, Errors: 0, Drops: 0, MTU errors: 0, Resource errors:
 0
  Ingress queues: 8 supported, 4 in use
  Queue counters:       Queued packets  Transmitted packets      Dropped packets

    0 best-effort                   0                    0                    0

    1 expedited-fo                  0                    0                    0

    2 assured-forw                  0                    0                    0

    3 network-cont                  0                    0                    0

  Egress queues: 8 supported, 4 in use
  Queue counters:       Queued packets  Transmitted packets      Dropped packets

    0 best-effort                  21                   21                    0

    1 expedited-fo                  0                    0                    0

    2 assured-forw                  0                    0                    0

    3 network-cont                451                  451                    0


  Logical interface ae0.0 (Index 70) (SNMP ifIndex 574) (Generation 177)
    Flags: SNMP-Traps 0x4000 Encapsulation: ENET2
    Statistics        Packets        pps         Bytes          bps
    Bundle:
        Input :      11826292     148809     544009602     54761856
        Output:            42          0          3396            0
    Link:
```

```
      ge-5/2/0.0
        Input :      11826292     148809     544009602     54761856
        Output:            42          0          3396            0
    Marker Statistics:   Marker Rx     Resp Tx   Unknown Rx   Illegal Rx
      ge-5/2/0.0                0           0            0            0
    Protocol inet, MTU: 1500, Generation: 236, Route table: 0
      Addresses, Flags: Is-Preferred Is-Primary
        Destination: 10.30.30.0/30, Local: 10.30.30.2, Broadcast: 10.30.30.3,
Generation: 310
    Protocol inet6, MTU: 1500, Generation: 237, Route table: 0
      Addresses, Flags: Is-Preferred Is-Primary
        Destination: ::10.30.30.0/126, Local: ::10.30.30.2
    Generation: 312
      Addresses, Flags: Is-Preferred
        Destination: fe80::/64, Local: fe80::21d:b5ff:fe61:dbf0
    Protocol multiservice, MTU: Unlimited, Generation: 314
    Generation: 238, Route table: 0
      Policer: Input: __default_arp_policer__
```

show interfaces statistics detail (Aggregated Ethernet—Egress)

```
user@host> show interfaces statistics detail ae0 | no-more
Physical interface: ae0, Enabled, Physical link is Up
  Interface index: 128, SNMP ifIndex: 501, Generation: 319
  Link-level type: Ethernet, MTU: 1514, Speed: 1Gbps, BPDU Error: None, MAC-REWRITE
 Error: None, Loopback: Disabled,
  Source filtering: Disabled, Flow control: Disabled, Minimum links needed: 1,
Minimum bandwidth needed: 0
  Device flags   : Present Running
  Interface flags: SNMP-Traps Internal: 0x4000
  Current address: 00:00:5E:00:53:f0, Hardware address: 00:00:5E:00:53:f0
  Last flapped   : 2009-11-09 03:30:24 PST (00:02:42 ago)
  Statistics last cleared: 2009-11-09 03:26:42 PST (00:06:24 ago)
  Traffic statistics:
   Input  bytes  :                 440                    0 bps
   Output bytes  :          1047338120             54635848 bps
   Input  packets:                   7                    0 pps
   Output packets:            22768200               148466 pps
   IPv6 transit statistics:
    Input  bytes  :                288
    Output bytes  :          723202616
    Input  packets:                  4
    Output packets:           15721796
  Input errors:
    Errors: 0, Drops: 0, Framing errors: 0, Runts: 0, Giants: 0, Policed discards:
 0, Resource errors: 0
  Output errors:
    Carrier transitions: 0, Errors: 0, Drops: 0, MTU errors: 0, Resource errors:
 0
  Ingress queues: 8 supported, 4 in use
  Queue counters:       Queued packets  Transmitted packets      Dropped packets

    0 best-effort                    0                    0                    0

    1 expedited-fo                   0                    0                    0

    2 assured-forw                   0                    0                    0

    3 network-cont                   0                    0                    0

  Egress queues: 8 supported, 4 in use
```

```
  Queue counters:       Queued packets  Transmitted packets      Dropped packets

    0 best-effort            201985796            201985796                    0

    1 expedited-fo                   0                    0                    0

    2 assured-forw                   0                    0                    0

    3 network-cont                  65                   65                    0


  Logical interface ae0.0 (Index 72) (SNMP ifIndex 505) (Generation 204)
    Flags: SNMP-Traps 0x4000 Encapsulation: ENET2
    Statistics        Packets        pps         Bytes          bps
    Bundle:
        Input :             7          0           440            0
        Output:      22768200     148466    1047338120     54635848
    Link:
      ge-2/1/6.0
        Input :             7          0           440            0
        Output:      22768200     148466    1047338120     54635848
    Marker Statistics:   Marker Rx     Resp Tx   Unknown Rx   Illegal Rx
      ge-2/1/6.0                0           0            0            0
    Protocol inet, MTU: 1500, Generation: 291, Route table: 0
      Addresses, Flags: Is-Preferred Is-Primary
        Destination: 10.30.30.0/30, Local: 10.30.30.1, Broadcast: 10.30.30.3,
Generation: 420
    Protocol inet6, MTU: 1500, Generation: 292, Route table: 0
      Addresses, Flags: Is-Preferred Is-Primary
        Destination: ::/26, Local: ::10.30.30.1
    Generation: 422
      Addresses, Flags: Is-Preferred
        Destination: fe80::/64, Local: fe80::21f:12ff:fec2:37f0
    Protocol multiservice, MTU: Unlimited, Generation: 424
    Generation: 293, Route table: 0
      Policer: Input: __default_arp_policer__
```

show interfaces statistics (SONET/SDH)

```
user@host> show interfaces statistics detail so-3/0/0 | no-more
Physical interface: so-3/0/0, Enabled, Physical link is Up
  Interface index: 133, SNMP ifIndex: 538, Generation: 283
  Link-level type: PPP, MTU: 4474, Clocking: Internal, SONET mode, Speed: OC192,
 Loopback: None, FCS: 16, Payload scrambler: Enabled
  Device flags   : Present Running
  Interface flags: Point-To-Point SNMP-Traps Internal: 0x4000
  Link flags     : Keepalives
  Hold-times     : Up 0 ms, Down 0 ms
  Keepalive settings: Interval 10 seconds, Up-count 1, Down-count 3
  Keepalive statistics:
    Input : 13 (last seen 00:00:04 ago)
    Output: 14 (last sent 00:00:02 ago)
  LCP state: Opened
  NCP state: inet: Opened, inet6: Opened, iso: Not-configured, mpls: Not-configured

  CHAP state: Closed
  PAP state: Closed
  CoS queues     : 8 supported, 8 maximum usable queues
  Last flapped   : 2009-11-09 02:52:34 PST (01:12:39 ago)
  Statistics last cleared: 2009-11-09 03:58:54 PST (00:06:19 ago)
  Traffic statistics:
```



```
    Input  bytes  :           2559160294             54761720 bps
    Output bytes  :                10640                   48 bps
    Input  packets:             55633975               148809 pps
    Output packets:                  216                    0 pps
    IPv6 transit statistics:
     Input  bytes  :           647922328
     Output bytes  :                   0
     Input  packets:            14085269
     Output packets:                   0
  Input errors:
    Errors: 0, Drops: 0, Framing errors: 0, Runts: 0, Giants: 0, Bucket drops:
0, Policed discards: 0, L3 incompletes: 0,
    L2 channel errors: 0, L2 mismatch timeouts: 0, HS link CRC errors: 0, HS link
 FIFO overflows: 0
  Output errors:
    Carrier transitions: 0, Errors: 0, Drops: 0, Aged packets: 0, HS link FIFO
underflows: 0, MTU errors: 0
  Egress queues: 8 supported, 4 in use
  Queue counters:       Queued packets  Transmitted packets      Dropped packets

    0 best-effort                    4                    4                    0

    1 expedited-fo                   0                    0                    0

    2 assured-forw                   0                    0                    0

    3 network-cont                 213                  213                    0

  SONET alarms   : None
  SONET defects  : None

  Logical interface so-3/0/0.0 (Index 72) (SNMP ifIndex 578) (Generation 182)
    Flags: Point-To-Point SNMP-Traps 0x4000 Encapsulation: PPP
    Protocol inet, MTU: 4470, Generation: 244, Route table: 0
      Addresses, Flags: Is-Preferred Is-Primary
        Destination: 10.30.30.0/30, Local: 10.30.30.2, Broadcast: 10.30.30.3,
Generation: 322
    Protocol inet6, MTU: 4470, Generation: 245, Route table: 0
      Addresses, Flags: Is-Preferred Is-Primary
        Destination: ::10.30.30.0/126, Local: ::10.30.30.2
    Generation: 324
      Addresses, Flags: Is-Preferred
        Destination: fe80::/64, Local: fe80::2a0:a5ff:fe61:9264
    Generation: 326
```

show interfaces statistics (Aggregated SONET/SDH—Ingress)

```
user@host> show interfaces statistics detail as0 | no-more
Physical interface: as0, Enabled, Physical link is Up
  Interface index: 132, SNMP ifIndex: 534, Generation: 282
  Link-level type: PPP, MTU: 4474, Speed: OC192, Minimum links needed: 1, Minimum
 bandwidth needed: 0
  Device flags   : Present Running
  Interface flags: SNMP-Traps Internal: 0x4000
  Link flags     : Keepalives
  Keepalive settings: Interval 10 seconds, Up-count 1, Down-count 3
  Last flapped   : 2009-11-09 03:45:53 PST (00:09:38 ago)
  Statistics last cleared: 2009-11-09 03:48:17 PST (00:07:14 ago)
  Traffic statistics:
   Input  bytes  :           2969786332             54761688 bps
   Output bytes  :                11601                    0 bps
```

```
   Input  packets:             64560636               148808 pps
   Output packets:                  225                    0 pps
   IPv6 transit statistics:
    Input  bytes  :          2086013152
    Output bytes  :                   0
    Input  packets:            45348114
    Output packets:                   0
  Input errors:
    Errors: 0, Drops: 0, Framing errors: 0, Runts: 0, Giants: 0, Policed discards:
 0, Resource errors: 0
  Output errors:
    Carrier transitions: 0, Errors: 0, Drops: 0, MTU errors: 0, Resource errors:
 0
  Egress queues: 8 supported, 4 in use
  Queue counters:       Queued packets  Transmitted packets      Dropped packets

    0 best-effort                    3                    3                    0

    1 expedited-fo                   0                    0                    0

    2 assured-forw                   0                    0                    0

    3 network-cont                 222                  222                    0


  Logical interface as0.0 (Index 71) (SNMP ifIndex 576) (Generation 179)
    Flags: Point-To-Point SNMP-Traps 0x4000 Encapsulation: PPP
    Statistics        Packets        pps         Bytes          bps
    Bundle:
        Input :      64560550     148808    2969785300     54761688
        Output:           139          0         10344            0
    Link:
      so-3/0/0.0
        Input :      64560550     148808    2969785300     54761688
        Output:           139          0         10344            0
    Protocol inet, MTU: 4470, Generation: 240, Route table: 0
      Addresses, Flags: Is-Preferred Is-Primary
        Destination: 10.30.30.0/30, Local: 10.30.30.2, Broadcast: 10.30.30.3,
Generation: 316
    Protocol inet6, MTU: 4470, Generation: 241, Route table: 0
      Addresses, Flags: Is-Preferred Is-Primary
        Destination: ::10.30.30.0/126, Local: ::10.30.30.2
    Generation: 318
      Addresses, Flags: Is-Preferred
        Destination: fe80::/64, Local: fe80::2a0:a5ff:fe61:9264
    Generation: 320
```

show interfaces statistics (Aggregated SONET/SDH—Egress)

```
user@host> show interfaces statistics detail as0 | no-more
Physical interface: as0, Enabled, Physical link is Up
  Interface index: 132, SNMP ifIndex: 565, Generation: 323
  Link-level type: PPP, MTU: 4474, Speed: OC192, Minimum links needed: 1, Minimum
 bandwidth needed: 0
  Device flags   : Present Running
  Interface flags: SNMP-Traps Internal: 0x4000
  Link flags     : Keepalives
  Keepalive settings: Interval 10 seconds, Up-count 1, Down-count 3
  Last flapped   : 2009-11-09 03:43:37 PST (00:12:48 ago)
  Statistics last cleared: 2009-11-09 03:48:54 PST (00:07:31 ago)
  Traffic statistics:
```



```
   Input  bytes  :                11198                  392 bps
   Output bytes  :           3101452132             54783448 bps
   Input  packets:                  234                    0 pps
   Output packets:             67422937               148868 pps
   IPv6 transit statistics:
    Input  bytes  :                5780
    Output bytes  :          2171015678
    Input  packets:                  72
    Output packets:            47195993
  Input errors:
    Errors: 0, Drops: 0, Framing errors: 0, Runts: 0, Giants: 0, Policed discards:
 0, Resource errors: 0
  Output errors:
    Carrier transitions: 0, Errors: 0, Drops: 0, MTU errors: 0, Resource errors:
 0
  Egress queues: 8 supported, 4 in use
  Queue counters:       Queued packets  Transmitted packets      Dropped packets

    0 best-effort             67422830             67422830                    0

    1 expedited-fo                   0                    0                    0

    2 assured-forw                   0                    0                    0

    3 network-cont                  90                   90                    0


  Logical interface as0.0 (Index 71) (SNMP ifIndex 548) (Generation 206)
    Flags: Point-To-Point SNMP-Traps 0x4000 Encapsulation: PPP
    Statistics        Packets        pps         Bytes          bps
    Bundle:
        Input :           144          0         10118          392
        Output:      67422847     148868    3101450962     54783448
    Link:
      so-0/1/0.0
        Input :           144          0         10118          392
        Output:      67422847     148868    3101450962     54783448
    Protocol inet, MTU: 4470, Generation: 295, Route table: 0
      Addresses, Flags: Is-Preferred Is-Primary
        Destination: 10.30.30.0/30, Local: 10.30.30.1, Broadcast: 10.30.30.3,
Generation: 426
    Protocol inet6, MTU: 4470, Generation: 296, Route table: 0
      Addresses, Flags: Is-Preferred Is-Primary
        Destination: ::/26, Local: ::10.30.30.1
    Generation: 428
      Addresses, Flags: Is-Preferred
        Destination: fe80::/64, Local: fe80::2a0:a5ff:fe63:1d0a
    Generation: 429
```

show interfaces statistics (MX Series Routers)

```
user@host> show interfaces xe-0/0/0 statistics
Physical interface: xe-0/0/0, Enabled, Physical link is Up
  Interface index: 145, SNMP ifIndex: 592
  Link-level type: Ethernet, MTU: 1514, LAN-PHY mode, Speed: 10Gbps, BPDU Error:
 None, Loopback: None, Source filtering: Disabled, Flow control: Enabled
  Pad to minimum frame size: Enabled
  Device flags   : Present Running
  Interface flags: SNMP-Traps Internal: 0x0
  Link flags     : None
  CoS queues     : 8 supported, 8 maximum usable queues
```

```
  Current address: 00:00:5E:00:53:f0, Hardware address: 00:00:5E:00:53:f0
  Last flapped   : 2013-10-26 03:20:40 test (2w3d 03:29 ago)
  Statistics last cleared: Never
  Input rate     : 0 bps (0 pps)
  Output rate    : 0 bps (0 pps)
  Input errors: 0, Output errors: 0
  Active alarms  : LINK
  Active defects : LINK
  PCS statistics                      Seconds
    Bit errors                           109
    Errored blocks                       109
  Interface transmit statistics: Disabled
```

show interfaces statistics (PTX Series Packet Transport Routers)

```
user@host> show interfaces statistics em0
 Physical interface: em0, Enabled, Physical link is Up
      Interface index: 8, SNMP ifIndex: 0
      Type: Ethernet, Link-level type: Ethernet, MTU: 1514, Speed: 1000mbps
      Device flags   : Present Running
      Interface flags: SNMP-Traps
      Link type      : Full-Duplex
      Current address: 00:00:5E:00:53:1b, Hardware address: 00:00:5E:00:53:1b
      Last flapped   : Never
      Statistics last cleared: Never
 Input packets : 212620
 Output packets: 71
      Input errors: 0, Output errors: 0

      Logical interface em0.0 (Index 3) (SNMP ifIndex 0)
 Flags: SNMP-Traps Encapsulation: ENET2
 Input packets : 212590
 Output packets: 71
 Protocol inet, MTU: 1500
   Flags: Is-Primary
   Addresses, Flags: Is-Default Is-Preferred Is-Primary
     Destination: 192.168.3/24, Local: 192.168.3.30,
     Broadcast: 192.168.3.255
```

show interfaces statistics (ACX Series routers)

```
user@host> show interfaces statistics ge-0/1/7
Physical interface: ge-0/1/7, Enabled, Physical link is Down
  Interface index: 151, SNMP ifIndex: 524
  Link-level type: Ethernet, Media type: Copper, MTU: 1514, Link-mode: Full-duplex,
 Speed: 1000mbps, BPDU Error: None, MAC-REWRITE Error: None, Loopback: Disabled,

  Source filtering: Disabled, Flow control: Enabled, Auto-negotiation: Enabled,
Remote fault: Online
  Device flags   : Present Running Down
  Interface flags: Hardware-Down SNMP-Traps Internal: 0x0
  Link flags     : None
  CoS queues     : 8 supported, 8 maximum usable queues
  Current address: 00:00:5E:00:53:a3, Hardware address: 00:00:5E:00:53:a3
  Last flapped   : 2012-05-11 04:25:28 PDT (2d 20:23 ago)
  Statistics last cleared: 2012-05-13 23:07:23 PDT (01:41:25 ago)
  Input rate     : 0 bps (0 pps)
  Output rate    : 0 bps (0 pps)
  Input errors: 0, Output errors: 0
  Active alarms  : LINK
```

```
Active defects : LINK
Interface transmit statistics: Disabled
```

show interfaces terse satellite-device

Syntax show interfaces terse satellite-device (device-alias | all)

Release Information Command introduced in Junos OS Release 14.2R3 for Junos Fusion Provider Edge.
Command introduced in Junos OS Release 16.1R1 for Junos Fusion Enterprise.
Command introduced in Junos OS Release 17.2R1 for Junos Fusion Data Center.

Description Display the satellite device extended ports in a Junos Fusion.

Options **device-alias** ***device-alias***—Display extended port information for the satellite device using the specified device alias only.

all—Display information for all extended ports and aggregated Ethernet interfaces with extended ports as members configured on all of the satellite devices.

Required Privilege Level view

Related Documentation
- *Configuring or Expanding a Junos Fusion Enterprise*

List of Sample Output
show interfaces terse satellite-device device-alias on page 831
show interfaces terse satellite-device all on page 831

Output Fields Table 37 on page 830 lists the output fields for the **show interfaces terse satellite-device** command. Output fields are listed in the approximate order in which they appear.

Table 37: show interfaces terse satellite-device Output Fields

Field Name	Field Description
Interface	Interface name.
Admin	Whether the interface is turned on (up) or off (down).
Link	Link state: **up** or **down**.
Proto	Protocol family configured on the logical interface.
Local	Local IP address of the logical interface.
Remote	Remote IP address of the logical interface.

Sample Output

show interfaces terse satellite-device device-alias

```
user@aggregation-device> show interfaces terse satellite-device TOR1
Interface               Admin Link Proto    Local                 Remote
sd-101/0/0              up    up
sd-101/0/0.32770        up    up   bridge
xe-101/0/14             up    up
xe-101/0/15             up    up
xe-101/0/16             up    up
xe-101/0/17             up    up
xe-101/0/24             up    up
xe-101/0/25             up    up
xe-101/0/31             up    up
xe-101/0/31.0           up    up   bridge
xe-101/0/32             up    down
xe-101/0/32.0           up    down bridge
xe-101/0/33             up    down
xe-101/0/33.0           up    down bridge
ge-101/0/36             up    down
et-101/0/48             up    down
xe-101/0/50:0           up    up
xe-101/0/50:0.0         up    up   bridge
xe-101/0/50:1           up    up
xe-101/0/50:2           up    up
xe-101/0/50:2.0         up    up   bridge
xe-101/0/50:3           up    up
```

Sample Output

show interfaces terse satellite-device all

```
user@aggregation-device> show interfaces terse satellite-device all
Interface               Admin Link Proto    Local                 Remote
ae0                     up    up
ae0.0                   up    up   bridge
ae1                     up    up
ae1.0                   up    up   bridge
ae2                     up    up
ae2.0                   up    up   bridge
ae3                     up    up
ae3.0                   up    up   bridge
ae4                     up    up
ae4.0                   up    up   bridge
ae5                     up    up
ae5.0                   up    up   bridge
ae6                     up    up
ae6.0                   up    up   bridge
ae7                     up    up
ae7.0                   up    up   bridge
ae8                     up    up
ae8.0                   up    up   bridge
ae9                     up    up
ae9.0                   up    up   bridge
ae10                    up    down
ae10.0                  up    down bridge
xe-101/0/14             up    up
xe-101/0/15             up    up
xe-101/0/16             up    up
```

```
xe-101/0/17             up    up
xe-101/0/24             up    up
xe-101/0/25             up    up
xe-101/0/31             up    up
xe-101/0/31.0           up    up   bridge
xe-101/0/32             up    down
xe-101/0/32.0           up    down bridge
xe-101/0/33             up    down
xe-101/0/33.0           up    down bridge
ge-101/0/36             up    down
et-101/0/48             up    down
xe-101/0/50:0           up    up
xe-101/0/50:0.0         up    up   bridge
xe-101/0/50:1           up    up
xe-101/0/50:2           up    up
xe-101/0/50:2.0         up    up   bridge
xe-101/0/50:3           up    up
xe-102/0/10             up    up
xe-102/0/11             up    up
xe-102/0/12             up    down
xe-102/0/13             up    up
xe-102/0/14             up    up
xe-102/0/15             up    up
xe-102/0/16             up    up
xe-102/0/17             up    up
xe-102/0/24             up    up
xe-102/0/25             up    up
xe-102/0/31             up    up
xe-102/0/31.0           up    up   bridge
xe-102/0/32             up    up
xe-102/0/32.0           up    up   bridge
xe-102/0/33             up    up
xe-102/0/45             up    down
ge-102/0/46             up    down
xe-102/0/47             up    down
et-102/0/48             up    down
et-102/0/49             up    down
et-102/0/50             up    down
et-102/0/51             up    down
et-102/0/52             up    down
et-102/0/53             up    down
ge-103/0/0              up    up
ge-103/0/0.0            up    up   aenet    --> ae0.0
ge-103/0/1              up    down
ge-103/0/1.0            up    down aenet    --> ae1.0
ge-103/0/2              up    up
ge-103/0/2.0            up    up   aenet    --> ae2.0
ge-103/0/3              up    up
```

show system core-dumps

List of Syntax

Syntax

show system core-dumps
<re0>
<re1>
<routing-engine>
<satellite [*fpc-slot-id* |device-alias *alias-name*]>

Syntax (EX Series Switches)

show system core-dumps
<all-members>
<local>
<member *member-id*>

Syntax (TX Matrix Router)

show system core-dumps
<all-chassis | all-lcc | lcc *number* | scc>

Syntax (TX Matrix Plus Router)

show system core-dumps
<all-chassis | all-lcc | lcc *number* | sfc *number*>

Syntax (QFX Series and OCX Series)

show system core-dumps
<component (*UUID* | *serial number* | all)>
<display-period (*hours* | *minutes* | *seconds*)>
<display-order>
<kernel-crashinfo component (*UUID* | *serial number*)>
<repository (core | log)>

Release Information

Command introduced before Junos OS Release 8.5.
Command introduced in Junos OS Release 9.0 for EX Series switches.
sfc option introduced in Junos OS Release 9.6 for the TX Matrix Plus router.
Command introduced in Junos OS Release 11.1 for the QFX Series.
re0, **re1**, and **routing-engine** options introduced for dual Routing Engines in Junos OS Release 13.1.
Command introduced in Junos OS Release 14.1X53-D20 for the OCX Series.
satellite option introduced in Junos OS Release 14.2R3.
core-file-info option is deprecated in Junos OS Release 16.1R3.

Description

Show core files on all routers or switches running Junos OS. You can use the **show system core-dumps** command to show a list of system core files created when the router or switch has failed. This command can be useful for diagnostic purposes. Each list item includes the file permissions, number of links, owner, group, size, modification date, and path and filename. If dual Routing Engines are present, you can view core-dump files for either routing engine or both routing engines together. On a QFabric system, you can view

core-dump files on individual QFabric system devices as well as on the entire QFabric system.

Options **none**—Display a list of all existing core-dump files.

NOTE: **If dual Routing Engines are present, then only the core-dump files for the active Routing Engine are listed.**

all-chassis—(TX Matrix and TX Matrix Plus routers only) (Optional) On a routing matrix based on a TX Matrix router, display system core files for the TX Matrix router switch-card chassis [SCC] and all the T640 routers [LCCs] connected to the TX Matrix router.

On a routing matrix based on a TX Matrix Plus router, display system core files for the TX Matrix Plus router (switch-fabric chassis [SFC]) and all the T1600 routers [LCCs] connected to the TX Matrix Plus router.

<all-lcc | lcc *number*>—(TX Matrix and TX Matrix Plus routers only) (Optional) On a routing matrix based on the TX Matrix router, display core dump files for all T640 routers (line-card chassis [LCCs]) or a specific T640 router [LCC] connected to the TX Matrix router.

On a routing matrix based on the TX Matrix Plus router, display logging information for all T1600 routers (line-card chassis [LCCs]) or a specific T1600 router (LCC) connected to the TX Matrix Plus router. When using the **lcc *number*** option, replace ***number*** with a value from **0** through **3**.

NOTE: **The all-chassis option displays system core files for the SCC or SFC and the LCCs connected to the SCC or SFC in the routing matrix while the all-lcc option only displays system core files for the LCCs in the routing matrix.**

all-members—(EX4200 switches) (Optional) Display system core files on all members of the Virtual Chassis configuration.

component (*UUID* | *serial number* | *all*)—(QFabric systems only) (Optional) Display a list of core-dump files located on individual QFabric system device or on the entire QFabric system.

display-order (timestamp-sort | alphanumeric-sort)—(QFabric systems only) (Optional) Display list of debug artifacts generated within the specified period—for example, within the last hour, within the last 20 minutes, or within the last 32 seconds—or according to their filename.

display-period (*hours* | *minutes* | *seconds*)—(QFabric systems only) (Optional) Display core-dump files generated within the specified period—for example, within the last hour, within the last 20 minutes, or within the last 32 seconds.

kernel-crashinfo component (*UUID* | *serial number*)—(QFabric systems only) (Optional) Display kernel crash information from the EEPROM on a QFabric system device.

local—(EX4200 switches only) (Optional) Display system core files on the local Virtual Chassis member.

member *member-id*—(EX4200 switches only) (Optional) Display system core files on the specified member of the Virtual Chassis configuration. Replace ***member-id*** with a value from 0 through 9.

re0—(Dual Routing Engines only) Display the core-dump files on re0.

re1—(Dual Routing Engines only) Display the coredump files on re1.

repository (core | log)—(QFabric systems only) (Optional) Specify either the core or log repository in which to view core-dump files.

routing-engine (backup | both | local | master | other)—(Dual routing engines only) Display a list of core-dump files for either the backup, local, master, or other routing engine or both routing engines.

satellite [*fpc-slot-id* | device-alias *alias-name*]—(Junos Fusion only)(Optional) Display system core files for the specified satellite device in a Junos Fusion, or for all satellite devices in the Junos Fusion if no satellite devices are specified.

scc—(TX Matrix routers only) (Optional) Display system core files on the TX Matrix router (or switch-card chassis).

sfc—(TX Matrix Plus routers only) (Optional) Display system core files on the TX Matrix Plus router (or switch-fabric chassis).

Required Privilege Level

view

List of Sample Output

Output Fields Table 38 on page 836 describes the output fields for the **show system core-dumps** command. Output fields are listed in the approximate order in which they appear.

Table 38: show system core-dumps Output Fields

Field Name	Field Description
Permissions	Read/write permissions for the file named.
Links	Number of links to the file.
Owner	Name of the file owner.
Group	Name of the group with file access.
File size	File size in bytes.
Modified	Last file modification date and time.
Path/filename	File path where the file resides and the filename. (MX Series routers only) When you display the core files for an MX Series Virtual Chassis, the **show system core-dumps** command does not display information about files pertaining to the relayd process.
Repository scope:	Repository where core-dump files and log files are stored. The core-dump files are located in the **core** repository, and the log files are located in the **log** repository. The default **Repository scope** is shared since both the **core** and **log** repositories are shared by all of the QFabric system devices.
Repository head:	Path to the top-level repository location.
Repository name:	Name of the repository: **core** or **log**.
List of nodes for core repository:	List of core-dump files associated with a particular QFabric system device located in the core repository.
Node Group	Name of the QFabric system device.
Node Identifier	UUID or serial number of the QFabric system device.
Num	Number of core-dump and log files.
Model	Model number of the QFabric system device.
Usage	Usage of the repository in megabytes.
Total usage of core repository:	Total usage of core-dump files associated with a particular QFabric system device located in the core repository. Usage is specified in megabytes and as a percentage.

Table 38: show system core-dumps Output Fields (continued)

Field Name	Field Description
Total usage of log repository:	Total usage of log files associated with a particular QFabric system device located in the log repository. Usage is specified in megabytes and as a percentage.
List of nodes for core repository:	List of core-dump files associated with a particular QFabric system device located in the core repository.
List of nodes for log repository:	List of log files associated with a particular QFabric system device located in the log repository.
Filename	Name of the core-dump file.
Date	Last core-dump file modification date and time.
Size	Size of the core-dump file.
Core filename	Filename of the core-dump file.
Process name	Name of the process that is generating a core-dump file or log file.
Release	Junos OS release.
Build server	Junos OS build server.
Build date	Junos OS build date.
Stack trace	Stack trace of the core-dump file.

Sample Output

show system core-dumps

This example shows the command output if core files exist.

```
user@host> show system core-dumps
-rw------- 1 root wheel 268369920 Jun 18 17:59 /var/crash/vmcore.0
-rw-rw---- 1 root field 3371008 Jun 18 17:53 /var/tmp/rpd.core.0
-rw-r--r-- 1 root wheel 27775914 Jun 18 17:59 /var/crash/kernel.0
```

show system core-dumps

This example shows the command output if core files do not exist.

```
user@host> show system core-dumps
/var/crash/*core*: No such file or directory
/var/tmp/*core*: No such file or directory
/var/tmp/pics/*core*: No such file or directory
/var/crash/kernel.*: No such file or directory
```

show system core-dumps routing-engine both

This example shows the command output if dual Routing Engines are present.

```
user@host> show system core-dumps routing-engine both
re0:
--------------------------------------------------------------------------
/var/crash/*core*: No such file or directory
/var/tmp/pics/*core*: No such file or directory
/var/crash/kernel.*: No such file or directory

/var/tmp/cores:
total blocks: 496776
-rw-rw----  1 root  field   11910589 Nov 8  13:20 chassisd.core.0.201311081320
...

-rw-rw----  1 root  field   11737227 Oct 28 14:21
rpd.core-tarball.4.tgz.201310281421.3458162
total files: 10

re1:
--------------------------------------------------------------------------
/var/crash/*core*: No such file or directory
/var/tmp/pics/*core*: No such file or directory
/var/crash/kernel.*: No such file or directory

/var/tmp/cores:
total blocks: 3178420
-rw-rw----  1 root  field   19039721 Nov 8  14:29
chassisd.core.0.201311081429.3485600.gz
-rw-rw----  1 root  field   19039793 Nov 8  14:37
chassisd.core.1.201311081437.3485599.gz
..

-rw-rw----  1 root  field   11710113 Oct 17 15:26
rpd.core-tarball.1.tgz.201310171526.3430028
```

show system core-dumps (TX Matrix Plus Router)

```
user@host> show system core-dumps
sfc0-re0:
--------------------------------------------------------------------------
/var/crash/kernel.*: No such file or directory
/tftpboot/corefiles/*core*: No such file or directory

/var/crash/cores:
total 8

/var/tmp/cores:
total 1627592
-rw-r--r--  1 root  field  535346090 May 15 07:36
rpd.core-tarball.0.090515.0736.tgz
-rw-r--r--  1 root  field  105632057 May 15 07:37
rpd.core-tarball.1.090515.0737.tgz
-rw-r--r--  1 root  field  101981681 May 15 07:38
rpd.core-tarball.2.090515.0738.tgz
-rw-r--r--  1 root  field   85854573 May 15 07:40
rpd.core-tarball.3.090515.0740.tgz
-rw-r--r--  1 root  field    4157845 May 15 08:18
rpd.core-tarball.4.090515.0818.tgz
```

```
lcc0-re0:
--------------------------------------------------------------------------
/var/crash/kernel.*: No such file or directory
/tftpboot/corefiles/*core*: No such file or directory

/var/crash/cores:
total 8

/var/tmp/cores:
total 12

lcc1-re0:
--------------------------------------------------------------------------
/var/crash/kernel.*: No such file or directory
/tftpboot/corefiles/*core*: No such file or directory

/var/crash/cores:
total 8

/var/tmp/cores:
total 10024
-rw-r--r--  1 root  field    1875794 Apr 22 15:47
chassisd.core-tarball.0.090422.1547.tgz
-rw-r--r--  1 root  field    1894183 Apr 22 19:02
chassisd.core-tarball.0.090422.1902.tgz
-rw-r--r--  1 root  field    1290240 Apr 26 16:01 ksyncd_1558.core.0.090426.1601

lcc2-re0:
--------------------------------------------------------------------------
/var/crash/kernel.*: No such file or directory
/tftpboot/corefiles/*core*: No such file or directory

/var/crash/cores:
total 21124008
-rw-r--r--  1 root  wheel  1022376528 May 2  06:43
core-LCC2-EGFPC7.core.0.090502.0643
-rw-r--r--  1 root  wheel  1022376528 May 2  08:13
core-LCC2-EGFPC7.core.0.090502.0813
-rw-r--r--  1 root  wheel  1022376544 May 5  06:15
core-LCC2-EGFPC7.core.0.090505.0615
-rw-r--r--  1 root  wheel  1022376544 May 6  10:59
core-LCC2-EGFPC7.core.0.090506.1059
-rw-r--r--  1 root  wheel  1022376528 May 2  06:58
core-LCC2-EGFPC7.core.1.090502.0658
-rw-r--r--  1 root  wheel  754271232 May 5  06:33
core-LCC2-EGFPC7.core.1.090505.0633
-rw-r--r--  1 root  wheel  264897536 May 6  11:12
core-LCC2-EGFPC7.core.1.090506.1112
-rw-r--r--  1 root  wheel  1022376528 May 2  07:22
core-LCC2-EGFPC7.core.2.090502.0722
-rw-r--r--  1 root  wheel  163633152 May 5  06:52
core-LCC2-EGFPC7.core.2.090505.0652
-rw-r--r--  1 root  wheel  171312128 May 6  12:13
core-LCC2-EGFPC7.core.2.090506.1213
-rw-r--r--  1 root  wheel  1022376528 May 2  07:39
core-LCC2-EGFPC7.core.3.090502.0739
-rw-r--r--  1 root  wheel  1022376528 May 2  07:55
core-LCC2-EGFPC7.core.4.090502.0755
-rw-r--r--  1 root  wheel  427277312 May 7  04:47
core-LCC2-STFPC4.core.0.090507.0447
```

```
-rw-r--r--  1 root  wheel  419609600 May 7  04:47
core-LCC2-STFPC5.core.0.090507.0447
-rw-r--r--  1 root  wheel  432356352 May 7  04:47
core-LCC2-STFPC6.core.0.090507.0447

/var/tmp/cores:
total 2568
-rw-r--r--  1 root  field    1290240 May 14 14:26 ksyncd_1540.core.0.090514.1426
...
```

show system core-dumps (QFX3500 Switch)

```
user@switch> show system core-dumps
/var/crash/*core*: No such file or directory
-rw-rw----  1 root  field    1545143 Jun 4   2012 /var/tmp/pafxpc.core.0.gz
-rw-rw----  1 root  field    1545146 Jun 4   2012 /var/tmp/pafxpc.core.1.gz
-rw-rw----  1 root  field    1545141 Jun 4   2012 /var/tmp/pafxpc.core.2.gz
-rw-rw----  1 root  field    1545146 Jun 4   2012 /var/tmp/pafxpc.core.3.gz
-rw-rw----  1 root  field    1545142 Jun 5   2012 /var/tmp/pafxpc.core.4.gz
/var/tmp/pics/*core*: No such file or directory
/var/crash/kernel.*: No such file or directory
/tftpboot/corefiles/*core*: No such file or directory
total 5
```

show system core-dumps (QFabric Systems)

```
user@switch> show system core-dumps
Repository scope: shared
Repository head: /pbdata/export
List of nodes for core repository: /pbdata/export/rdumps/
Node Group      Node Identifier                          Num  Model        Usage

DG-0            BCF7208D-E44F-E011-802F-4171BAAC781D     0    qfx3100      0M
FM-0            73747cd8-0710-11e1-b6a4-00e081c5297e     0    fx-jvre      0M
DRE-0           77116f18-0710-11e1-a2a0-00e081c5297e     0    fx-jvre      0M
NW-NG-0         BBAK0394                                 0    qfx3500      0M
NW-NG-0         cd78871a-0710-11e1-878e-00e081c5297e     0    fx-jvre      0M
NW-NG-0         d0afda1e-0710-11e1-a1d0-00e081c5297e     0    fx-jvre      0M
FC-0            d31ab7a6-0710-11e1-ad1b-00e081c5297e     0    fx-jvre      0M
FC-1            d4d0f254-0710-11e1-90c3-00e081c5297e     0    fx-jvre      0M
IC-WS001        WS001                                    0    -            -
IC-WS001        WS001/YW3803                             0    qfxc08-3008  0M
IC-WS001        WS001/YN5999                             0    qfxc08-3008  0M
node-device1    BBAK0372                                 0    qfx3500      0M
node-device1    EE3093                                   0    qfx3500      0M
Total usage of core repository:0M of 70000M (0.0%)

List of nodes for log repository: /pbdata/export/rlogs/
Node Group      Node Identifier                          Num  Model        Usage

DG-0            BCF7208D-E44F-E011-802F-4171BAAC781D     0    qfx3100      0M
FM-0            73747cd8-0710-11e1-b6a4-00e081c5297e     1    fx-jvre      0M
DRE-0           77116f18-0710-11e1-a2a0-00e081c5297e     1    fx-jvre      0M
NW-NG-0         BBAK0394                                 1    qfx3500      0M
NW-NG-0         cd78871a-0710-11e1-878e-00e081c5297e     1    fx-jvre      0M
NW-NG-0         d0afda1e-0710-11e1-a1d0-00e081c5297e     3    fx-jvre      0M
FC-0            d31ab7a6-0710-11e1-ad1b-00e081c5297e     1    fx-jvre      0M
FC-1            d4d0f254-0710-11e1-90c3-00e081c5297e     1    fx-jvre      0M
IC-WS001        WS001                                    0    -            -
IC-WS001        WS001/YN5999                             1    qfxc08-3008  0M
```

```
IC-WS001        WS001/YW3803                            1    qfxc08-3008  0M
node-device1    BBAK0372                                1    qfx3500      0M
node-device1    EE3093                                  1    qfx3500      0M
Total usage of log repository:0M of 70000M (0.0%)
```

show system core-dumps component serial number display-order alphanumeric-sort repository core (QFabric Systems)

```
user@switch> show system core-dumps component BBAK8891 display-order alphanumeric-sort
repository core
Repository scope: shared
Repository head: /pbdata/export
Repository name: core
List of core dumps for component BBAK8891
Repository location: /pbdata/export/rdumps/BBAK8891
Filename                                    Date                       Size

eswd.core.0.1361.11172011214257.gz          Nov 17 21:43:10 2011       4779553
eswd.core.1.80267.11172011214514.gz         Nov 17 21:45:19 2011       3541648
eswd.core.2.80682.11172011214535.gz         Nov 17 21:45:43 2011       2156683
vccpd.core.0.1195.11182011151131.gz         Nov 18 15:11:35 2011       375617
Number of core dumps in repository:4
```

show system core-dumps display-period (QFabric Systems)

```
user@switch> show system core-dumps display-period 24h
 show system core-dumps display-period 24h
Repository scope: shared
Repository head: /pbdata/export
List of core dumps at repository: /pbdata/export/rdumps
Delta timespec: Last 24h
Component: BBAK8273
Filename                                    Size                       Date

vccpd.core.0.1195.11182011151131.gz         Nov 18 15:11:35 2011       375794
Component: cedb7b0e-0025-11e1-9a5f-00e081c52990
Filename                                    Size                       Date

vccpd.core.0.1461.11182011151131.gz         Nov 18 15:11:31 2011       120951
Component: ee19c4f8-0025-11e1-aef6-00e081c52990
Filename                                    Size                       Date

vccpd.core.0.1462.11182011151131.gz         Nov 18 15:11:31 2011       109420
Component: BBAK8281
Filename                                    Size                       Date

vccpd.core.0.1196.11182011151131.gz         Nov 18 15:11:36 2011       375373
Component: BBAK8891
Filename                                    Size                       Date

vccpd.core.0.1195.11182011151131.gz         Nov 18 15:11:35 2011       375617
Component: BBAK8276
Filename                                    Size                       Date

vccpd.core.0.1196.11182011151131.gz         Nov 18 15:11:35 2011       375350
Component: BBAK8868
Filename                                    Size                       Date

vccpd.core.0.1196.11182011151130.gz         Nov 18 15:11:34 2011       376211
Component: BBAK8835
```

```
Filename                                    Size                      Date

vccpd.core.0.1195.11182011151130.gz         Nov 18 15:11:35 2011      375700
Component: BBAK8283
Filename                                    Size                      Date

vccpd.core.0.1195.11182011151131.gz         Nov 18 15:11:36 2011      368298
Component: YW3781/YW3781
Filename                                    Size                      Date

vccpd.core.0.1220.11182011151131.gz         Nov 18 15:11:38 2011      380002
Component: 09726be2-0026-11e1-82d9-00e081c52990
Filename                                    Size                      Date

vccpd.core.0.1461.11182011151130.gz         Nov 18 15:11:31 2011      119965
Component: BBAK8309
Filename                                    Size                      Date

vccpd.core.0.1196.11182011151131.gz         Nov 18 15:11:36 2011      378930
Component: 303d476a-0026-11e1-abf4-00e081c52990
Filename                                    Size                      Date

vccpd.core.0.1460.11182011151131.gz         Nov 18 15:11:31 2011      118385
Component: YW3798/YW3798
Filename                                    Size                      Date

vccpd.core.0.1219.11182011151131.gz         Nov 18 15:11:36 2011      380455
List of log dumps at repository: /pbdata/export/rlogs
Delta timespec: Last 24h
Component: BBAK8273
Filename                                    Size                      Date

vccpd.tarball.0.1195.11182011151138.tgz     Nov 18 15:11:39 2011      20415
Component: cedb7b0e-0025-11e1-9a5f-00e081c52990
Filename                                    Size                      Date

vccpd.tarball.0.1461.11182011151131.tgz     Nov 18 15:11:33 2011      19651
Component: ee19c4f8-0025-11e1-aef6-00e081c52990
Filename                                    Size                      Date

vccpd.tarball.0.1462.11182011151133.tgz     Nov 18 15:11:36 2011      24650
Component: BBAK8281
Filename                                    Size                      Date

vccpd.tarball.0.1196.11182011151137.tgz     Nov 18 15:11:41 2011      19445
Component: BBAK8891
Filename                                    Size                      Date

vccpd.tarball.0.1195.11182011151138.tgz     Nov 18 15:11:41 2011      21916
Component: BBAK8276
Filename                                    Size                      Date

vccpd.tarball.0.1196.11182011151137.tgz     Nov 18 15:11:39 2011      20461
Component: BBAK8868
Filename                                    Size                      Date

vccpd.tarball.0.1196.11182011151137.tgz     Nov 18 15:11:41 2011      21924
Component: BBAK8835
Filename                                    Size                      Date

vccpd.tarball.0.1195.11182011151137.tgz     Nov 18 15:11:39 2011      19424
```

```
Component: BBAK8283
Filename                                    Size                      Date

vccpd.tarball.0.1195.11182011151138.tgz    Nov 18 15:11:42 2011      31186
Component: YW3781/YW3781
Filename                                    Size                      Date

vccpd.tarball.0.1220.11182011151141.tgz    Nov 18 15:11:45 2011      27565
Component: 09726be2-0026-11e1-82d9-00e081c52990
Filename                                    Size                      Date

vccpd.tarball.0.1461.11182011151130.tgz    Nov 18 15:11:34 2011      19613
Component: BBAK8309
Filename                                    Size                      Date

vccpd.tarball.0.1196.11182011151138.tgz    Nov 18 15:11:46 2011      50362
Component: 303d476a-0026-11e1-abf4-00e081c52990
Filename                                    Size                      Date

vccpd.tarball.0.1460.11182011151133.tgz    Nov 18 15:11:33 2011      19360
Component: YW3798/YW3798
Filename                                    Size                      Date

vccpd.tarball.0.1219.11182011151140.tgz    Nov 18 15:11:49 2011      24473
```

show system core-dumps kernel-crashinfo component serial number (QFabric Systems)

```
user@switch> show system core-dumps kernel-crashinfo component A0001/YA0197
Node: A0001/YA0197

Information about previous kernel crash:

-- Kernel panic data --

Panic string: kdb_sysctl_panic
System uptime: 3 day 20 hr 59 min 40 sec Kernel crash time: 2011-11-15 Wed 15:25:17
 Kernel build linkstamp: JUNOS 11.3I #0: 2011-11-10 20:42:27 UTC

-- Stacktrace of panicing context --
Processor 1 (crash monarch):
savectx+0x0 (c9552800,80214efc,802a7fbc,c88ad05c) ra 801b93a8 sz 0
kdm_kcore_save_crashinfo+0x254 (c9552800,0,802a7fbc,c88ad05c) ra 801b9f44 sz 784
 kdm_kcore_kern_panic_event_handler+0x4b0 (c9552800,0,802a7fbc,c88ad05c) ra
8022a9b8 sz 88
panic+0x1d0 (c9552800,0,4,77fed534) ra 802540c0 sz 56
kdb_sysctl_panic+0x70 (c9552800,0,4,77fed534) ra 80237e58 sz 40 sysctl_root+0x12c
 (c9552800,0,4,e8bc5cf8) ra 80238e50 sz 48
userland_sysctl+0x164 (c9552800,0,4,e8bc5cf8) ra 8023956c sz 104
__sysctl+0xe4 (c9552800,0,4,e8bc5cf8) ra 806d62e8 sz 160
trap+0xe1c (c9552800,0,4,e8bc5cf8) ra 80896e68 sz 128
MipsUserGenException+0x1a4 (c9552800,0,4,405cd12c) ra 0 sz 0
pid 82340, process: sysctl

Processor 0:
restoreintr+0x14 (1,81bca820,3,0) ra 806cdc3c sz 0
spinlock_exit+0x30 (1,81bca820,3,0) ra 8025d354 sz 24
sleepq_release+0x64 (1,81bca820,3,0) ra 8025e670 sz 24
sleepq_timeout+0x224 (1,81bca820,3,0) ra 80240294 sz 48
softclock+0x434 (1,81bca820,3,0) ra 802067f8 sz 80
ithread_loop+0x244 (1,81bca820,3,0) ra 80200e28 sz 64 fork_exit+0xc0
(1,81bca820,3,0) ra 80897c28 sz 48
```

```
MipsNMIException+0x34 (1,81bca820,3,0) ra 0 sz 0
pid 82340, process: sysctl

Processor 2:
cpu_idle+0x20 (80960000,51bbc,2031df,81bca1b8) ra 80204948 sz 24 idle_proc+0x130
 (80960000,51bbc,2031df,81bca1b8) ra 80200e28 sz 56 fork_exit+0xc0
(80960000,51bbc,2031df,81bca1b8) ra 80897c28 sz 48
MipsNMIException+0x34 (80960000,51bbc,2031df,81bca1b8) ra 0 sz 0
pid 82340, process: sysctl

Processor 3:
cpu_idle+0x20 (80960000,51bbc,2038df,81bca300) ra 80204948 sz 24 idle_proc+0x130
 (80960000,51bbc,2038df,81bca300) ra 80200e28 sz 56 fork_exit+0xc0
(80960000,51bbc,2038df,81bca300) ra 80897c28 sz 48
MipsNMIException+0x34 (80960000,51bbc,2038df,81bca300) ra 0 sz 0
pid 82340, process: sysctl

Processor 4:
cpu_idle+0x20 (80960000,51bbc,2037df,81bca448) ra 80204948 sz 24 idle_proc+0x130
 (80960000,51bbc,2037df,81bca448) ra 80200e28 sz 56 fork_exit+0xc0
(80960000,51bbc,2037df,81bca448) ra 80897c28 sz 48
MipsNMIException+0x34 (80960000,51bbc,2037df,81bca448) ra 0 sz 0
pid 82340, process: sysctl

Processor 5:
restoreintr+0x14 (1,51bbc,203edf,81bca590) ra 806cdc3c sz 0
spinlock_exit+0x30 (1,51bbc,203edf,81bca590) ra 80204a34 sz 24 idle_proc+0x21c
(1,51bbc,203edf,81bca590) ra 80200e28 sz 56 fork_exit+0xc0
(1,51bbc,203edf,81bca590) ra 80897c28 sz 48
MipsNMIException+0x34 (1,51bbc,203edf,81bca590) ra 0 sz 0
pid 82340, process: sysctl

Processor 6:
cpu_idle+0x20 (80960000,51bbc,205cdf,81bca6d8) ra 80204948 sz 24 idle_proc+0x130
 (80960000,51bbc,205cdf,81bca6d8) ra 80200e28 sz 56 fork_exit+0xc0
(80960000,51bbc,205cdf,81bca6d8) ra 80897c28 sz 48
MipsNMIException+0x34 (80960000,51bbc,205cdf,81bca6d8) ra 0 sz 0
pid 82340, process: sysctl

Processor 7:
lockmgr+0x5ac (c97e8484,c8dd9800,0,c8dd9800) ra 8c11c81c sz 48
sal_sem_take+0x134 (c97e8484,c8dd9800,0,c8dd9800) ra 8c351108 sz 56
_bcm_esw_linkscan_thread+0x45c (c97e8484,c8dd9800,0,c8dd9800) ra 8c11cdb4 sz 104
sal_thread_start_wrap+0x74 (c97e8484,c8dd9800,0,c8dd9800) ra 80200e28 sz 32
fork_exit+0xc0 (c97e8484,c8dd9800,0,c8dd9800) ra 80897c28 sz 48
MipsNMIException+0x34 (c97e8484,c8dd9800,0,c8dd9800) ra 0 sz 0
pid 82340, process: sysctl
-- End of stacktrace --
```

show system core-dumps repository core (QFabric Systems)

```
user@switch> show system core-dumps repository core
Repository scope: shared
Repository head: /pbdata/export
Repository name: core
List of nodes for core repository: /pbdata/export/rdumps/
Node Group      Node Identifier                         Num  Model        Usage

DG-0            BCF7208D-E44F-E011-802F-4171BAAC781D    0    qfx3100      OM
FM-0            73747cd8-0710-11e1-b6a4-00e081c5297e    0    fx-jvre      OM
DRE-0           77116f18-0710-11e1-a2a0-00e081c5297e    0    fx-jvre      OM
```

```
NW-NG-0         BBAK0394                                0    qfx3500      0M
NW-NG-0         cd78871a-0710-11e1-878e-00e081c5297e    0    fx-jvre      0M
NW-NG-0         d0afda1e-0710-11e1-a1d0-00e081c5297e    0    fx-jvre      0M
FC-0            d31ab7a6-0710-11e1-ad1b-00e081c5297e    0    fx-jvre      0M
FC-1            d4d0f254-0710-11e1-90c3-00e081c5297e    0    fx-jvre      0M
IC-WS001        WS001                                   0    -            -
IC-WS001        WS001/YW3803                            0    qfxc08-3008  0M
IC-WS001        WS001/YN5999                            0    qfxc08-3008  0M
node-device1    BBAK0372                                0    qfx3500      0M
node-device1    EE3093                                  0    qfx3500      0M
Total usage of core repository:0M of 70000M (0.0%)
```

show system core-dumps repository log (QFabric Systems)

```
user@switch> show system core-dumps repository log
Repository scope: shared
Repository head: /pbdata/export
Repository name: log
List of nodes for log repository: /pbdata/export/rlogs/
Node Group      Node Identifier                         Num  Model        Usage

DG-0            BCF7208D-E44F-E011-802F-4171BAAC781D    0    qfx3100      0M
FM-0            73747cd8-0710-11e1-b6a4-00e081c5297e    1    fx-jvre      0M
DRE-0           77116f18-0710-11e1-a2a0-00e081c5297e    1    fx-jvre      0M
NW-NG-0         BBAK0394                                1    qfx3500      0M
NW-NG-0         cd78871a-0710-11e1-878e-00e081c5297e    1    fx-jvre      0M
NW-NG-0         d0afda1e-0710-11e1-a1d0-00e081c5297e    3    fx-jvre      0M
FC-0            d31ab7a6-0710-11e1-ad1b-00e081c5297e    1    fx-jvre      0M
FC-1            d4d0f254-0710-11e1-90c3-00e081c5297e    1    fx-jvre      0M
IC-WS001        WS001                                   0    -            -
IC-WS001        WS001/YN5999                            1    qfxc08-3008  0M
IC-WS001        WS001/YW3803                            1    qfxc08-3008  0M
node-device1    BBAK0372                                1    qfx3500      0M
node-device1    EE3093                                  1    qfx3500      0M
Total usage of log repository:0M of 70000M (0.0%)
```

CHAPTER 6

Automatic ICCP Provisioning and Automatic VLAN Provisioning of an Interchassis Link in a Junos Fusion

Understanding Automatic ICCP Provisioning and Automatic VLAN Provisioning of an Interchassis Link

This topic discusses how automatic ICCP provisioning and automatic VLAN provisioning of the interchassis link simplify the configuration of a Junos Fusion. It covers the following items:

Automatic Interchassis Control Protocol (ICCP) Provisioning of an Interchassis Link

For simplicity, the ICCP configuration is now handled through redundancy group configuration. When you configure the chassis ID, redundancy group ID, and peer chassis ID for the redundancy group, those parameters are used to automatically configure the ICCP parameters for the ICL. For information on how to create a redundancy group, see "Configuring or Expanding a Junos Fusion Data Center" on page 47.

Automatic ICCP provisioning is enabled by default, and the values that are created by automatic ICCP provisioning are exposed at the **[edit chassis satellite-management redundancy-groups *redundancy-group-name* peer-chassis-id *peer-chassis-id-number*]** hierarchy level. You can configure the ICCP parameters manually at the **[edit protocols iccp]** hierarchy level but doing this is only recommended for expert users. If you manually configure an ICCP parameter that is normally set by default, your configuration automatically overrides the default parameter. If you decide to configure ICCP, you must configure matching configurations on both aggregation devices.

NOTE: ICCP configuration is beyond the scope of this document. See *Configuring Multichassis Link Aggregation on EX Series Switches* for more information.

You can disable automatic ICCP provisioning by enabling the **no-auto-iccp-provisioning** statement at the **[edit chassis satellite-management redundancy-groups *redundancy-group-name* peer-chassis-id *peer-chassis-id-number*]** hierarchy level.

Automatic VLAN Provisioning of an Interchassis Link

Automatic VLAN provisioning of an interchassis link (ICL) simplifies configuration of a Junos Fusion by allowing the ICL interconnecting the dual aggregation devices to automatically detect all VLAN traffic on the Junos Fusion and seamlessly forward VLAN information between the aggregation devices over the ICL. You do not have to manually change the VLAN membership on the ICL every time VLAN membership of a satellite device changes. For example, if satellite devices 100-103 have port membership for additional VLANs with IDs of 11-15, you no longer need to add the new VLAN IDs to the VLAN ID list.

Automatic VLAN provisioning detects VLANs on dual-homed satellite interfaces which are either manually configured or those that are detected as part of the VLAN autosensing feature and provisions those VLANs on the ICL. For information on VLAN autosensing, see "Understanding VLAN Autosensing" on page 885. Automatic VLAN provisioning only works when the ICL is in trunk mode, and when the ICL interfaces are configured with the **unit 0 family ethernet-switching** option.

Automatic VLAN provisioning is enabled by default in a Junos Fusion Data Center. You can disable automatic VLAN provisioning by configuring the **no-auto-vlan-provisioning** statement at the **edit chassis satellite-management redundancy-groups *redundancy-group-name* peer-chassis-id *peer-chassis-id-number*** hierarchy. When automatic VLAN provisioning is disabled, you have to manually configure the supported VLANs on each ICL to ensure VLAN information is shared between aggregation devices. However, any VLANs that you have configured manually are retained when you disable automatic VLAN provisioning.

NOTE: ICL configuration is beyond the scope of this document. See *Configuring Multichassis Link Aggregation on EX Series Switches* for more information.

Related Documentation

- Understanding VLAN Autosensing on page 885
- no-auto-iccp-provisioning on page 849
- no-auto-vlan-provisioning on page 850
- *Configuring Multichassis Link Aggregation on EX Series Switches*

no-auto-iccp-provisioning (Junos Fusion Redundancy Group)

Syntax no-auto-iccp-provisioning;

Hierarchy Level [edit chassis satellite-management redundancy-groups *redundancy-group-name* peer-chassis-id *peer-chassis-id-number*]

Release Information Statement introduced in Junos OS Release 16.1R1 for Junos Fusion Enterprise.

Description Disable automatic ICCP provisioning of an interchassis link (ICL) for the redundancy group used to configure dual aggregation devices in a Junos Fusion topology.

Automatic ICCP provisioning of an interchassis link (ICL) simplifies configuration of a Junos Fusion with dual aggregation devices by automatically provisioning the ICCP configuration within the Junos Fusion, instead of requiring the user to manually configure all ICCP parameters. Automatic ICCP Provisioning of an interchassis link (ICL) is enabled by default for a Junos Fusion using a dual aggregation device topology; this statement disables automatic ICCP provisioning.

If this statement is entered, the user has to manually configure ICCP in the redundancy group used to configure dual aggregation devices in a Junos Fusion topology.

This statement is optional. You can manually configure any available ICCP configuration parameters in the redundancy group when automatic ICCP provisioning is enabled. In cases where a user configures an ICCP parameter when automatic ICCP provisioning is enabled, the user-configured ICCP configuration is used over the automatically-provisioned ICCP configuration parameter.

User configuration of ICCP in a Junos Fusion is not required. This statement is recommended for use by expert users only.

Default Automatic ICCP Provisioning is enabled by default in redundancy groups used to configure dual aggregation devices in a Junos Fusion topology.

Required Privilege Level admin—To view this statement in the configuration.
admin-control—To add this statement to the configuration.

Related Documentation

- Understanding Automatic ICCP Provisioning and Automatic VLAN Provisioning of an Interchassis Link on page 847
- *Configuring or Expanding a Junos Fusion Enterprise*

no-auto-vlan-provisioning (Junos Fusion Redundancy Group)

Syntax no-auto-vlan-provisioning;

Hierarchy Level [edit chassis satellite-management redundancy-groups *redundancy-group-name* peer-chassis-id *peer-chassis-id-number*]

Release Information Statement introduced in Junos OS Release 16.1R1 for Junos Fusion Enterprise.

Description Disables Automatic VLAN Provisioning of an interchassis link (ICL) in a Junos Fusion with dual aggregation devices.

Automatic VLAN Provisioning of an interchassis link (ICL) in a Junos Fusion simplifies configuration of a Junos Fusion with dual aggregation devices by allowing the ICL interconnecting the dual aggregation devices to automatically detect all VLAN traffic on the Junos Fusion and seamlessly forward VLAN information between the aggregation devices over the ICL.

When automatic VLAN Provisioning is disabled, you have to manually configure the supported VLANs on each ICL to ensure VLAN information is shared between aggregation devices.

Automatic VLAN Provisioning only works when the ICL is in trunk mode, and when the ICL interfaces are configured into **unit 0 family ethernet-switching**.

Default Automatic VLAN Provisioning is enabled by default for ICLs in trunk mode in a Junos Fusion using dual aggregation devices, when the ICL interfaces are configured into **unit 0 family ethernet-switching**.

Required Privilege Level admin—To view this statement in the configuration.
admin-control—To add this statement to the configuration.

Related Documentation

- Understanding Automatic ICCP Provisioning and Automatic VLAN Provisioning of an Interchassis Link on page 847
- *Configuring or Expanding a Junos Fusion Enterprise*

CHAPTER 7

Configuration Synchronization in a Junos Fusion

Understanding Configuration Synchronization

This topic describes:

Simplifying Configuration

Starting with Junos OS Release 14.2R6 on MX Series routers and Junos Fusion, configuration synchronization enables you to easily propagate, synchronize, and commit configurations from one device to another. Starting with Junos OS Release 15.1X53-D60 on QFX Series switches, configuration synchronization enables you to easily propagate, synchronize, and commit configurations from one device to another. Starting with Junos OS Release 17.4R1 on Junos Fusion Data Center, configuration synchronization enables you to easily propagate, synchronize, and commit configurations from one device to up to three other devices. You can use configuration groups to simplify the configuration process. You can create one configuration group for the local device, one or more for the remote devices, and one for the global configuration, which is essentially a configuration that is common to all devices.

In addition, you can create conditional groups to specify when a configuration is synchronized with another device. You can enable the **peers-synchronize** statement at the **[edit system commit]** hierarchy to synchronize the configurations and commits across the devices by default. NETCONF over SSH provides a secure connection between the devices, and Secure Copy Protocol (SCP) copies the configurations securely between them.

To enable configuration synchronization, perform the following steps:

1. Create configuration groups for local, remote, and global configurations.
2. Create conditional groups.
3. Create apply groups.
4. Enable NETCONF over SSH.
5. Configure the device details and user authentication details for configuration synchronization.
6. Enable the **peers-synchronize** statement or issue the **commit peers-synchronize** command to synchronize and commit the configurations between local and remote devices.

Understanding Configuration Groups

You can create configuration groups for local, remote, and global configurations. A local configuration group is used by the local device, a remote configuration group is used by the remote device, and a global configuration group is shared between the local and remote devices.

For example, you could create a local configuration group called Group A, which would include the configuration used by the local device (Switch A), a remote configuration group called Group B, which would include the configuration used by remote devices (Switch B, Switch C, and Switch D), and a global configuration group called Group C, which would include the configuration that is common to all devices.

Create configuration groups at the **[edit groups]** hierarchy level.

NOTE: **Configuration synchronization does not support nested groups.**

Understanding Conditional Groups

You can create conditional groups to specify when a particular configuration should be applied to a device. If you want to apply the global configuration to all devices in a four-device configuration, for example, enable the **when peers [<*name of local peer*> <*name of remote peer*> <*name of remote peer*> <*name of remote peer*>]** statement at the **[edit groups]** hierarchy level. If, for example, you want to apply the global configuration (Group C) to the local and remote devices (Switch A, Switch B, Switch C, and Switch D), you could issue the **set groups Group C when peers [Switch A Switch B Switch C Switch D]** command.

Understanding Apply Groups

To apply the configuration groups, enable the **apply-groups** statement at the **[edit]** hierarchy level. For example, to apply the local configuration group (Group A, for example), remote configuration group (Group B, for example), and global configuration group (Group C, for example), issue the **set apply-groups [GroupA GroupB GroupC]** command.

Understanding Device Configuration Details for Configuration Synchronization

To synchronize configurations between devices, you need to configure the hostname or IP address, username, and password for the remote devices. To do this, issue the **set peers <*hostname-of-remote-peer*> user <*name-of-user*> authentication <*plain-text-password-string*>** command at the **[edit system commit]** hierarchy on the local device.

For example, to synchronize a configuration from Switch A to Switch B, issue the **set peers SwitchB user administrator authentication test123** command on Switch A.

For example, to synchronize a configuration from Switch A to Switch B, Switch C, and Switch D, configure the following on Switch A:

Switch A

```
[edit system commit]
peers {
   switchB {
      user admin-swB;
      authentication "$ABC123";
   }
   switchC {
      user admin-swC;
      authentication ""$ABC123";
   }
   switchD {
      user admin-swD;
      authentication "$ABC123";
   }
}
```

If you only want to synchronize configurations from Switch A to Switch B, Switch C, and Switch D, you do not need to configure the **peers** statement on Switch B, Switch C, and Switch D.

The configuration details from the peers statements are also used to establish a NETCONF over SSH connection between the devices. To enable NETCONF over SSH, issue the **set system services netconf ssh** command on all devices.

Understanding How Configurations and Commits Are Synchronized Between Devices

The local (or requesting) device on which you enable the **peers-synchronize** statement or issue the **commit peers-synchronize** command copies and loads its configuration to the remote (or responding) device. Each device then performs a syntax check on the configuration file being committed. If no errors are found, the configuration is activated and becomes the current operational configuration on all devices. The commits are propagated using a remote procedural call (RPC).

The following events occur during configuration synchronization:

1. The local device sends the sync-peers.conf file (the configuration that will be shared with the devices specified in the conditional group) to the remote devices.
2. The remote devices load the configuration, send the results of the load to the local device, export their configuration to the local device, and reply that the commit is complete.
3. The local device reads the replies from the remote devices.
4. If successful, the configuration is committed.

Configuration synchronization is not successful if either a) the remote device is unavailable or b) the remote device is reachable, but there are failures due to the following reasons:

- SSH connection fails because of user and authentication issues.
- Junos OS RPC fails because a lock cannot be obtained on the remote database.
- Loading the configuration fails because of syntax problems.
- Commit check fails.

The **peers-synchronize** statement uses the hostname or IP address, username, and password for the devices you configured in the **peers** statement. With the **peers-synchronize** statement enabled, you can simply issue the **commit** command to synchronize the configuration from one device to another. For example, if you configured the **peers** statement on the local device, and want to synchronize the configuration with the remote device, you can simply issue the **commit** command on the local device. However, if you issue the **commit** command on the local device and the remote device is not reachable, you will receive a warning message saying that the remote device is not reachable and only the configuration on the local device is committed:

Here is an example warning message:

```
error: netconf: could not read hello
error: did not receive hello packet from server
error: Setting up sessions for peer: 'peer1' failed
warning: Cannot connect to remote peers, ignoring it
commit complete
```

If you do not have the **peers** statement configured with the remote device information and you issue the **commit** command, only the configuration on the local device is committed. If the remote device is unreachable and there are other failures, the commit is unsuccessful on both the local and remote devices.

NOTE: When you enable the peers-synchronize statement and issue the commit command, the commit might take longer than a normal commit. Even if the configuration is the same across the devices and does not require synchronization, the system still attempts to synchronize the configurations.

The **commit peers-synchronize** command also uses the hostname or IP address, username, and password for the devices configured in the **peers** statement. If you issue the **commit peers-synchronize** command on the local device to synchronize the configuration with the remote device and the remote device is reachable but there are other failures, the commit fails on both the local and remote devices.

Release History Table

Release	Description
17.4R1	Starting with Junos OS Release 17.4R1 on Junos Fusion Data Center, configuration synchronization enables you to easily propagate, synchronize, and commit configurations from one device to up to three other devices.
15.1X53-D60	Starting with Junos OS Release 15.1X53-D60 on QFX Series switches, configuration synchronization enables you to easily propagate, synchronize, and commit configurations from one device to another.
14.2R6	Starting with Junos OS Release 14.2R6 on MX Series routers and Junos Fusion, configuration synchronization enables you to easily propagate, synchronize, and commit configurations from one device to another.

Synchronizing and Committing Configurations

To propagate, synchronize, and commit configuration changes from one device to another, perform following tasks:

- Configure the Devices for Configuration Synchronization on page 855
- Create a Global Configuration Group on page 856
- Create a Local Configuration Group on page 859
- Create a Remote Configuration Group on page 861
- Create Apply Groups for the Local, Remote, and Global Configurations on page 863
- Synchronizing and Committing Configurations on page 863
- Troubleshooting Remote Device Connections on page 864

Configure the Devices for Configuration Synchronization

Configure the hostnames or IP addresses for the devices that will be synchronizing their configurations as well as the usernames and authentication details for the users administering configuration synchronization. Additionally, enable a NETCONF connection so that the devices can synchronize their configurations. Secure Copy Protocol (SCP) copies the configurations securely between the devices.

For example, if you have a local device named Switch A and want to synchronize a configuration with remote devices named Switch B, Switch C, and Switch D, you need to configure the details for Switch B, Switch C, and Switch D on Switch A.

To specify the configuration details:

1. On the local device, specify the configuration details for the remote device.

```
[edit system commit]
user@switch# set peers hostname user username authentication password string
```

For example, if the local device is Switch A, and the remote devices are Switch B, Switch C, and Switch D:

```
[edit system commit]
user@Switch A# set peers Switch B user admin-SwitchB authentication "$ABC123"
user@Switch A# set peers Switch C user admin-SwitchC authentication "$ABC123"
user@Switch A# set peers Switch D user admin-SwitchD authentication "$ABC123"
```

The password string is stored as an authenticated password string.

The output for Switch A is as follows:

```
[edit system commit]
  peers {
  Switch B{
    user admin-SwitchB;
    authentication "$ABC123";
  }
  Switch C{
    user admin-SwitchC;
    authentication "$ABC123";
  }
  Switch D{
    user admin-SwitchD;
    authentication "$ABC123";
  }
}
```

2. Enable a NETCONF connection using SSH between all devices (Switch A, Switch B, Switch C, and Switch D).

   For example:

```
[edit]
user@Switch A# set system services netconf ssh

[edit]
user@Switch B# set system services netconf ssh

[edit]
user@Switch C# set system services netconf ssh

[edit]
user@Switch D# set system services netconf ssh
```

Create a Global Configuration Group

Create a global configuration group the local and remote devices.

To create a global configuration group:

1. Specify the devices that will receive the configuration:

```
[edit]
user@switch# set groups <name of group> when peers [<name of local peer> <name of remote peer>]
```

For example:

```
[edit]
user@switch# set groups global when peers [Switch A Switch B Switch C Switch D]
```

2. Create the global configuration that will be shared between the devices.

   For example:

```
interfaces {
  ge-0/0/0 {
    unit 0 {
      family inet {
        address 10.1.1.1/8;
      }
    }
  }
  ge-0/0/1 {
    ether-options {
      802.3ad ae0;
    }
  }
  ge-0/0/2 {
    ether-options {
      802.3ad ae1;
    }
  }
  ae0 {
    aggregated-ether-options {
      lacp {
        active;
      }
    }
    unit 0 {
      family ethernet-switching {
        interface-mode trunk;
        vlan {
          members v1;
        }
      }
    }
  }
  ae1 {
    aggregated-ether-options {
      lacp {
        active;
        system-id 00:01:02:03:04:05;
        admin-key 3;
      }
      mc-ae {
        mc-ae-id 1;
        redundancy-group 1;
```

```
                mode active-active;
            }
        }
        unit 0 {
            family ethernet-switching {
                interface-mode access;
                vlan {
                    members v1;
                }
            }
        }
    }
}
switch-options {
    service-id 1;
}
vlans {
    v1 {
        vlan-id 100;
        l3-interface irb.100;
    }
}
```

The output for the configuration is as follows:

```
groups {
    global {
        when {
            peers [ Switch A Switch B Switch C Switch D ];
        }
        interfaces {
            ge-0/0/0 {
                unit 0 {
                    family inet {
                        address 10.1.1.1/8;
                    }
                }
            }
            ge-0/0/1 {
                ether-options {
                    802.3ad ae0;
                }
            }
            ge-0/0/2 {
                ether-options {
                    802.3ad ae1;
                }
            }
            ae0 {
                aggregated-ether-options {
                    lacp {
                        active;
                    }
                }
                unit 0 {
```



```
                family ethernet-switching {
                  interface-mode trunk;
                  vlan {
                    members v1;
                  }
                }
              }
            }
            ae1 {
              aggregated-ether-options {
                lacp {
                  active;
                  system-id 00:01:02:03:04:05;
                  admin-key 3;
                }
                mc-ae {
                  mc-ae-id 1;
                  redundancy-group 1;
                  mode active-active;
                }
              }
              unit 0 {
                family ethernet-switching {
                  interface-mode access;
                  vlan {
                    members v1;
                  }
                }
              }
            }
          }
          switch-options {
            service-id 1;
          }
          vlans {
            v1 {
              vlan-id 100;
              l3-interface irb.100;
            }
          }
        }
      }
```

Create a Local Configuration Group

Create a local configuration group for the local device.

To create a local configuration group:

1. Specify the local configuration group name.

   ```
   [edit]
   user@switch# set groups name of group when peers [name of local peer]
   ```

   For example:

```
[edit]
user@switch# set groups local when peers [Switch A]
```

2. Include the local configuration that will be used by the local device.

   For example:

```
interfaces {
  ae1 {
    aggregated-ether-options {
      mc-ae {
        chassis-id 0;
        status-control active;
        events {
          iccp-peer-down {
            prefer-status-control-active;
          }
        }
      }
    }
  }
  irb {
    unit 100 {
      family inet {
        address 10.10.10.3/8 {
          arp 10.10.10.2 l2-interface ae0.0 mac 00:00:5E:00:53:00;
        }
      }
    }
  }
}
    multi-chassis {
      multi-chassis-protection 10.1.1.1 {
        interface ae0;
      }
    }
  }
}
```

The output for the configuration is as follows:

```
groups {
  local {
    when {
      peers Switch A;
    }
    interfaces {
      ae1 {
        aggregated-ether-options {
          mc-ae {
            chassis-id 0;
            status-control active;
            events {
              iccp-peer-down {
                prefer-status-control-active;
              }
```



```
                }
              }
            }
          }
          irb {
            unit 100 {
              family inet {
                address 10.10.10.3/8 {
                  arp 10.10.10.2 l2-interface ae0.0 mac 00:00:5E:00:53:00;
                }
              }
            }
          }
        }
        multi-chassis {
          multi-chassis-protection 10.1.1.1 {
            interface ae0;
          }
        }
      }
    }
```

Create a Remote Configuration Group

Create a remote configuration group for remote devices.

To create a remote configuration group:

1. Specify the remote configuration group name.

   ```
   [edit]
   user@switch# set groups name of group when peers [names of remote peers]
   ```

   For example:

   ```
   [edit]
   user@switch# set groups remote when peers [Switch B Switch C Switch D]
   ```

2. Include the remote configuration that will be used by the remote devices.

   For example:

   ```
   interfaces {
     ae1 {
       aggregated-ether-options {
         mc-ae {
           chassis-id 1;
           status-control standby;
           events {
             iccp-peer-down {
               prefer-status-control-active;
             }
           }
         }
       }
     }
     irb {
   ```

```
            unit 100 {
              family inet {
                address 10.10.10.3/8 {
                  arp 10.10.10.2 l2-interface ae0.0 mac 00:00:5E:00:53:00;
                }
              }
            }
          }
        }
          multi-chassis {
            multi-chassis-protection 10.1.1.1 {
              interface ae0;
            }
          }
        }
```

The output for the configuration is as follows:

```
  groups {
    remote {
      when {
        peers Switch B Switch C Switch D
      }
      interfaces {
        ae1 {
          aggregated-ether-options {
            mc-ae {
              chassis-id 1;
              status-control standby;
              events {
                iccp-peer-down {
                  prefer-status-control-active;
                }
              }
            }
          }
        }
        irb {
          unit 100 {
            family inet {
              address 10.10.10.3/8 {
                arp 10.10.10.2 l2-interface ae0.0 mac 00:00:5E:00:53:00;
              }
            }
          }
        }
      }
      multi-chassis {
        multi-chassis-protection 10.1.1.1 {
          interface ae0;
        }
      }
    }
  }
```


Create Apply Groups for the Local, Remote, and Global Configurations

Create apply groups so changes in the configuration are inherited by local, remote, and global configuration groups. List the configuration groups in order of inheritance, where the configuration data in the first configuration group takes priority over the data in subsequent configuration groups.

When you apply the configuration groups and issue the **commit peers-synchronize** command, changes are committed on both the local and remote devices. If there is an error on any of the devices, an error message is issued, and the commit is aborted.

To apply the configuration groups:

1. Specify the names of the configuration groups.

   ```
   [edit]
   user@switch# set apply-groups [<name of global configuration group> <name of local
   configuration group> <name of remote configuration group>]
   ```

   For example:

   ```
   [edit]
   user@switch# set apply-groups [ global local remote ]
   ```

   The output for the configuration is as follows:

   ```
   apply-groups [ global local remote ];
   ```

Synchronizing and Committing Configurations

NOTE: The **commit at <"string">** command is not supported when performing configuration synchronization.

You can enable the **peers-synchronize** statement on the local (or requesting) device to copy and load its configuration to the remote (or responding) device by default. You can alternatively issue the **commit peers-synchronize** command.

- Configure the **commit** command on the local (or requesting) to automatically perform a **peers-synchronize** action between devices.

  ```
  [edit]
  user@switch# set system commit peers-synchronize
  ```

  The output for the configuration is as follows:

  ```
  system {
    commit {
      peers-synchronize;
    }
  }
  ```

- Issue the **commit peers-synchronize** command on the local (or requesting) device.

```
[edit]
user@switch# commit peers-synchronize
```

Troubleshooting Remote Device Connections

Problem Description:

When you issue the **commit** command, the system issues the following error message:

```
root@Switch A# commit
error: netconf: could not read hello error: did not receive hello packet from server error: Setting
up sessions for peer: 'Switch B' failed warning: Cannot connect to remote peers, ignoring it
```

The error message shows that there is a NETCONF connection issue between the local device and remote device.

Resolution

1. Verify that the SSH connection to the remote device (Switch B) is working.

   ```
   root@Switch A# ssh root@Switch B
   @@@@@@@@@@@@@@@@@@@@@@@@@@@@@@@@@@@@@@@@@@@@@@@@@@@@@@@@@@@
   @ WARNING: REMOTE HOST IDENTIFICATION HAS CHANGED! @
   @@@@@@@@@@@@@@@@@@@@@@@@@@@@@@@@@@@@@@@@@@@@@@@@@@@@@@@@@@@
   IT IS POSSIBLE THAT SOMEONE IS DOING SOMETHING NASTY! Someone could be
   eavesdropping on you right now (man-in-the-middle attack)! It is also possible that a host
   key has just been changed. The fingerprint for the ECDSA key sent by the remote host is
   21:e8:5a:58:bb:29:8b:96:a4:eb:cc:8a:32:95:53:c0. Please contact your system administrator.
   Add correct host key in /root/.ssh/known_hosts to get rid of this message. Offending ECDSA
   key in /root/.ssh/known_hosts:1 ECDSA host key for Switch A has changed and you have
   requested strict checking. Host key verification failed.
   ```

   The error message shows that the SSH connection is not working.

2. Delete the key entry in the **/root/.ssh/known_hosts:1** directory and try to connect to Switch B again.

   ```
   root@Switch A# ssh root@Switch B
   The authenticity of host 'Switch B (10.92.76.235)' can't be established. ECDSA key fingerprint
   is 21:e8:5a:58:bb:29:8b:96:a4:eb:cc:8a:32:95:53:c0. Are you sure you want to continue
   connecting (yes/no)? yes Warning: Permanently added 'Switch A,10.92.76.235' (ECDSA) to
   the list of known hosts. Password: Last login: Wed Apr 13 15:29:58 2016 from 192.168.61.129 -
   JUNOS 15.1I20160412_0929_dc-builder Kernel 64-bit FLEX
   JNPR-10.1-20160217.114153_fbsd-builder_stable_10 At least one package installed on this
   device has limited support. Run 'file show /etc/notices/unsupported.txt' for details.
   ```

   Connection to Switch B was successful.

3. Log out of Switch B.

   ```
   root@Switch B# exit
   logout Connection to Switch B closed.
   ```

4. Verify that NETCONF over SSH is working.

   ```
   root@Switch A# ssh root@Switch B -s netconf
   logout Connection to st-72q-01 closed.
   Password:
   <hello xmlns="urn:ietf:params:xml:ns:netconf:base:1.0">
   <capabilities>
   <capability>urn:ietf:params:netconf:base:1.0</capability>
   <capability>urn:ietf:params:netconf:capability:candidate:1.0</capability>
   ```

   The log message shows that the NETCONF over SSH was successful.

   If the error message showed that NETCONF over SSH was not successful, enable NETCONF over SSH by issuing the **set system services netconf ssh** command.

5. Create configuration groups to synchronize if you have not done so already.

You can issue the **show | compare** command to see if any configuration groups have been created.

```
root@Switch A# show | compare
```

6. Issue the **commit** command.

```
root@Switch A# commit
[edit chassis]
configuration check succeeds
commit complete
{master:0}[edit]
```

The log message shows that the commit was successful.

groups

Syntax

```
groups {
  group-name {
    configuration-data;
    when {
      chassis chassis-id;
      member member-id;
      model model-id;
      node node-id;
      peers [ names of peers ]
      routing-engine routing-engine-id;
      time <start-time> [to <end-time>];
    }
      conditional-data;
  }
  lccn-re0 {
    configuration-data;
  }
  lccn-re1 {
    configuration-data;
  }
}
```

Hierarchy Level [edit]

Release Information Statement introduced before Junos OS Release 7.4.

Description Create a configuration group.

Options —

group-name——Name of the configuration group. To configure multiple groups, specify more than one ***group-name***.

configuration-data—The configuration statements that are to be applied elsewhere in the configuration with the **apply-groups** statement, to have the target configuration inherit the statements in the group.

when ***conditional-data***—Option introduced in Junos 11.3. The conditional statements that are to be applied when this configuration group is applied.

On routers that support multiple Routing Engines, you can also specify two special group names:

re0—Configuration statements that are to be applied to the Routing Engine in slot 0.

re1—Configuration statements that are to be applied to the Routing Engine in slot 1.

The configuration specified in group **re0** is applied only if the current Routing Engine is in slot 0; likewise, the configuration specified in group **re1** is applied only if the

current Routing Engine is in slot 1. Therefore, both Routing Engines can use the same configuration file, each using only the configuration statements that apply to it. Each **re0** or **re1** group contains at a minimum the configuration for the hostname and the management interface (**fxp0**). If each Routing Engine uses a different management interface, the group also should contain the configuration for the backup router and static routes.

(Routing matrix only) The TX Matrix router supports group names for the Routing Engines in each connected T640 router in the following formats:

NOTE: **The management Ethernet interface used for the TX Matrix Plus router, T1600 routers in a routing matrix, and PTX Series Packet Transport Routers, is em0. Junos OS automatically creates the router's management Ethernet interface, em0.**

- **lcc*n*-re0**—Configuration statements applied to the Routing Engine in slot 0 of the specified T640 router that is connected to a TX Matrix router.
- **lcc*n*-re1**—Configuration statements applied to the specified to the Routing Engine in slot 1 of the specified T640 router that is connected to a TX Matrix router.

  n identifies the T640 router and can be from 0 through 3.

The remaining statements are explained separately. See CLI Explorer.

Required Privilege Level

configure—To enter configuration mode.

Related Documentation

- *Creating a Junos OS Configuration Group*
- *apply-groups*
- *apply-groups-except*

peers (Commit)

Syntax

```
peers {
  name of peer {
    user name of user;
    authentication string;
  }
}
```

Hierarchy Level

[edit system commit]

Release Information

Statement introduced in Junos OS Release 14.2R6 for the MX Series and Junos Fusion.
Statement introduced in Junos OS Release 15.1X53-D60 for the QFX Series.
Statement introduced in Junos OS Release 16.1R1 for the EX Series.

Description

Configure options for the peers participating in commit synchronization.

Options

name of peer—Hostname or IP address of the peer participating in commit synchronization.

user—Name of administrator configuring commit synchronization.

authentication—Plain-text password string that is stored as an encrypted password string.

Required Privilege Level

maintenance—To view this statement in the configuration.
maintenance-control—To add this statement to the configuration.

Related Documentation

- *delta-export*
- *fast-synchronize*
- peers-synchronize on page 92
- *persist-groups-inheritance*
- *server*
- *synchronize*

peers-synchronize

Syntax peers-synchronize;

Hierarchy Level [edit system commit]

Release Information Statement introduced in Junos OS Release 14.2R6 for the MX Series and Junos Fusion.
Statement introduced in Junos OS Release 15.1X53-D60 for the QFX Series.
Statement introduced in Junos OS Release 16.1R1 for the EX Series.

Description Configure the **commit** command to automatically perform a **peers-synchronize** action between peers. The local peer (or requesting peer) on which you enable the **peers-synchronize** statement copies and loads its configuration to the remote (or responding) peer. Each peer then performs a syntax check on the configuration file being committed. If no errors are found, the configuration is activated and becomes the current operational configuration on both peers.

Required Privilege Level system—To view this statement in the configuration.
system-control—To add this statement to the configuration.

Related Documentation

- *delta-export*
- *fast-synchronize*
- *persist-groups-inheritance*
- *server*
- *synchronize*

CHAPTER 8

Licenses in a Junos Fusion

Understanding Junos Fusion Licenses

Starting with Junos OS Release 17.2R1, you need to install a Junos Fusion license in addition to any other feature licenses that you install to track and activate certain QFX5100-48SH and QFX5100-48TH models that are shipped with satellite software. These models can only be used as satellite devices. For these models, you need to install a Junos Fusion license in addition to any other feature licenses that you install. See Table 39 on page 872 for a list of satellite devices that require Junos Fusion licenses.

NOTE: **You do not need Junos Fusion licenses for satellite device models that were purchased as Junos OS-based top-of-rack switches.**

Install the Junos Fusion licenses on the aggregation device because the aggregation device is the single point of management in a Junos Fusion. If your Junos Fusion is operating in a topology with multiple aggregation devices, you only need to install the licenses on one aggregation device because the license keys are synchronized between the two aggregation devices.

You can install a single-pack license to activate one satellite device, or you can install multi-pack licenses, which can activate up to 128 satellite devices. If the number of satellite devices in a Junos Fusion exceeds the number of Junos Fusion licenses you have installed, the satellite devices are provisioned, but the system will issue a warning saying that there is a license limit violation. If the satellite device does not have a corresponding Junos Fusion license installed, the satellite device is provisioned, but the system will issue a warning.

Table 39 on page 872 lists the supported aggregation and satellite devices as well as the model numbers of the Junos Fusion license packs.

For information about how to purchase a software license, contact your Juniper Networks sales representative. For information on standard Junos OS feature licenses, see *Software Features That Require Licenses on the QFX Series*.

Table 39: Junos Fusion License Model Numbers for Satellite Devices

Aggregation Devices Supported	Satellite Devices Requiring Licenses	Model Numbers of License Packs
QFX10002, QFX10008 and QFX10016 switches	• QFX5100-48SH-AFO • QFX5100-48SH-AFI • QFX5100-48TH-AFO • QFX5100-48TH-AFI	QFX10K-C1-JFS-1 QFX10K-C1-JFS-4 QFX10K-C1-JFS-8 QFX10K-C1-JFS-16 QFX10K-C1-JFS-32 QFX10K-C1-JFS-64

Related Documentation

- *Junos OS Feature Licenses*
- *Junos OS Feature License Keys*
- *Generating License Keys*
- *Adding New Licenses (CLI Procedure)*
- *Deleting License Keys (CLI)*
- *Saving License Keys (CLI)*
- *Verifying Junos OS License Installation (CLI)*

CHAPTER 9

Link Aggregation and LACP on Junos Fusion Data Center

Understanding Link Aggregation and Link Aggregation Control Protocol in a Junos Fusion

Link Aggregation in Junos Fusion

Link aggregation is used to aggregate Ethernet interfaces between two devices. The aggregated Ethernet interfaces that participate in a *link aggregation group (LAG)* are called *member links*. Because a LAG is composed of multiple member links, even if one member link fails, the LAG continues to carry traffic over the remaining links.

Link Aggregation Control Protocol in Junos Fusion

Link Aggregation Contol Protocol (LACP) is one method of bundling several physical interfaces to form one logical aggregated Ethernet interface. LACP is a subcomponent of the IEEE 802.3ad standard and is used as a discovery protocol. The LACP mode can be active or passive. The transmitting link is known as the *actor*, and the receiving link is known as the *partner*. If the actor and partner are both in passive mode, they do not exchange LACP packets, and the aggregated Ethernet links do not come up. If either the actor or partner is active, they do exchange LACP packets. By default, LACP is in passive mode on aggregated Ethernet interfaces. To initiate transmission of LACP packets and response to LACP packets, you must enable LACP active mode. You can configure Ethernet links to actively transmit protocol data units (PDUs), or you can configure the links to passively transmit them, sending out LACP PDUs only when they receive them

from another link. You can configure both VLAN-tagged and untagged aggregated Ethernet interfaces without LACP enabled. LACP is defined in IEEE 802.3ad, *Aggregation of Multiple Link Segments*.

LACP was designed to achieve the following:

- Automatic addition and deletion of individual links to the LAG without user intervention.
- Link monitoring to check whether both ends of the bundle are connected to the correct group.

The satellite devices provide network interfaces that send and receive network traffic and process the periodic transmission of LACP packets. You can include extended ports (physical interface on a satellite device that provides a connection to servers or endpoints) or local ports in LAGs and MC-LAGs, but not both.

When a dual-homed end device is deployed with Junos Fusion, the network interface cards form a LAG with the Junos Fusion. During a Junos Fusion upgrade, the end device may not be able to exchange LACP PDUs. In such a situation you can configure an interface to be in the **up** state even if no PDUs are exchanged. Use the **force-up** statement to configure an interface when the peer has limited LACP capability. The interface selects the associated LAG by default, whether the LACP mode is active or passive. When there are no received PDUs, the partner is considered to be working in the passive mode. Therefore, LACP PDU transmissions are controlled by the transmitting link.

In Junos Fusion with EVPN, all aggregation devices have knowledge of any extended ports in a LAG because each LAG is assigned a unique Ethernet Segment Identifier (ESI). The ESI is based on the redundancy group configuration and global LAG interface ID.

Configuring Link Aggregation and LACP in Junos Fusion

1. Create a logical aggregated Ethernet interface.
2. Define the parameters associated with the logical aggregated Ethernet interface, such as a logical unit, interface properties, and Link Aggregation Control Protocol (LACP).
3. Define the member links to be contained within the aggregated Ethernet interface—for example, two local 10-Gigabit Ethernet interfaces on the aggregation device or two extended ports on the aggregation device.
   - LAGs and MC-LAGs cannot include a mix of extended ports and local ports on the aggregation device.
   - LAGs can span across multiple satellite devices in Junos Fusion Provider Edge and Junos Fusion Data Center.
   - LAGs cannot contain both single-homed and multihomed members.
   - Existing restrictions that apply to LAGs and MC-LAGs also apply to LAGs and MC-LAGs that include extended ports.
4. Configure LACP for link detection.

Software and Hardware Guidelines when Configuring Link Aggregation and LACP in Junos Fusion

Keep in mind these hardware and software guidelines:

- Up to 1750 LAGs are supported in Junos Fusion Provider Edge, Junos Fusion Enterprise, and Junos Fusion Data Center, and the LAGs are numbered from ae0 through ae4091.
- Up to 16 members are supported in a LAG in Junos Fusion Provider Edge, Junos Fusion Enterprise, and Junos Fusion Data Center.
- Configure the LAG on both sides of the link.
- The interfaces on either side of the link must be set to the same speed and be in full-duplex mode.
- Configure LACP for dual-homed extended ports identically on both of the aggregation devices; otherwise LACP will not be in a forwarding state.

Related Documentation

- *Junos Fusion Provider Edge Overview*
- Understanding Junos Fusion Ports on page 12
- Configuring Junos OS for Supporting Aggregated Devices on page 876

Configuring an Aggregated Ethernet Interface

On Fast Ethernet, Tri-Rate Ethernet copper, Gigabit Ethernet, and 10-Gigabit Ethernet interfaces on M Series and T Series routers, you can associate a physical interface with an aggregated Ethernet interface.

NOTE: On a Junos Fusion, you can include extended ports (physical interface on a satellite device that provides a connection to servers or endpoints) or local ports in link aggregation groups (LAGs) and MC-LAGs, but not both. For information on extended ports, see "Understanding Junos Fusion Ports" on page 12.

To configure an aggregated Ethernet interface:

1. Specify that you want to configure the link aggregation group interface.

   user@host# **edit interfaces** ***interface-name***

2. Configure the aggregated Ethernet interface.

   [edit interfaces *interface-name*]
   user@host# **set (fastether-options | gigether-options) 802.3ad ae*x***

You specify the interface instance number ***x*** to complete the link association; ***x*** can be from 0 through 127, for a total of 128 aggregated interfaces on M Series and T Series

routers and can be from 1 through 480, for a total of 480 aggregated interfaces on MX Series routers. For MX Series routers running Junos release 14.2R3 and later you can configure a maximum of 1000 aggregated interfaces. Aggregated interfaces are numbered from **ae0** through **ae4092**.

NOTE: On MX2010 and MX2020 routers you can configure a maximum of 800 aggregated interfaces.

You must also include a statement defining **ae*x*** at the **[edit interfaces]** hierarchy level. You can optionally specify other physical properties that apply specifically to the aggregated Ethernet interfaces; for details, see *Ethernet Interfaces Overview*, and for a sample configuration, see *Example: Configuring Aggregated Ethernet Interfaces*.

NOTE: In general, aggregated Ethernet bundles support the features available on all supported interfaces that can become a member link within the bundle. As an exception, Gigabit Ethernet IQ features and some newer Gigabit Ethernet features are not supported in aggregated Ethernet bundles.

Gigabit Ethernet IQ and SFP interfaces can be member links, but IQ- and SFP-specific features are not supported on the aggregated Ethernet bundle even if all the member links individually support those features.

You need to configure the correct link speed for the aggregated Ethernet interface to eliminate any warning message.

NOTE: Before you commit an aggregated Ethernet configuration, ensure that link mode is not configured on any member interface of the aggregated Ethernet bundle; otherwise, the configuration commit check fails.

Related Documentation

- *Configuring the Number of Aggregated Ethernet Interfaces on the Device*
- *Deleting an Aggregated Ethernet Interface*
- *Aggregated Ethernet Interfaces Overview*
- *Ethernet Interfaces Feature Guide for Routing Devices*

Configuring Junos OS for Supporting Aggregated Devices

Junos OS supports the aggregation of physical devices into defined virtual links, such as the link aggregation of Ethernet interfaces defined by the IEEE 802.3ad standard.

Tasks for configuring aggregated devices are:

- Configuring Virtual Links for Aggregated Devices on page 877
- Configuring LACP Link Protection at the Chassis Level on page 877

Configuring Virtual Links for Aggregated Devices

To define virtual links, you need to specify the associations between physical and logical devices within the **[edit interfaces]** hierarchy, and assign the correct number of logical devices by including the **device-count** statement at the **[edit chassis aggregated-devices ethernet]** and **[edit chassis aggregated-devices sonet]** hierarchy levels:

```
[edit chassis]
aggregated-devices {
  ethernet {
    device-count number;
  }
  sonet {
    device-count number;
  }
}
```

The aggregated interfaces are numbered from **ae0** through **ae4091**. The maximum number of aggregated interfaces supported by different routers is listed below:

- For PTX Series routers, you can configure a maximum of 128 aggregated interfaces.
- For M Series and T Series routers, you can configure a maximum of 128 aggregated interfaces (LAG bundles).
- In Junos release 14.2R2 and earlier, you can configure a maximum of 480 aggregated interfaces on MX Series routers.
- In Junos release 14.2R3 and later, you can configure a maximum of 1000 aggregated interfaces on MX240, MX480, and MX960 routers.
- In Junos release 14.2R3 and later, you can configure a maximum of 800 aggregated interfaces on MX2010 and MX2020 routers.
- In Junos OS 15.1F5 and 15.1F6 releases, you can configure a maximum of 480 aggregated interfaces on MX240, MX480, and MX960 routers.
- In Junos OS 15.1F5 and 15.1F6 releases, you can configure a maximum of 800 aggregated interfaces on MX2010 and MX2020 routers.

For SONET/SDH, starting with Junos OS Release 13.2, the maximum number of logical interfaces is 64, numbered from **as0** through **as63**. In releases before Junos OS Release 13.2, the maximum was 16.

Configuring LACP Link Protection at the Chassis Level

Link Aggregation Control Protocol (LACP) is one method of bundling several physical interfaces to form one logical interface. You can configure both VLAN-tagged and untagged aggregated Ethernet with or without LACP enabled. LACP exchanges are made

between actors and partners. An actor is the local interface in an LACP exchange. A partner is the remote interface in an LACP exchange.

LACP link protection enables you to force active and standby links within an aggregated Ethernet. You configure LACP link protection by using the **link-protection** and **system-priority** statements at either the chassis or interface level and by configuring port priority at the interface level using the **system-priority** statement. Configuring LACP parameters at the chassis level results in all aggregated Ethernet interfaces using the defined values unless overridden by the LACP configuration on a specific interface.

```
[edit chassis]
aggregated-devices {
  ethernet {
    lacp {
      link-protection {
        non-revertive;
      }
      system-priority priority;
    }
  }
}
```

NOTE: LACP link protection also uses port priority. You can configure port priority at the Ethernet interface **[gigether-options]** hierarchy level using the **port-priority** statement. If you choose not to configure port priority, LACP link protection uses the default value for port priority (127).

See Also

Enabling LACP Link Protection

To enable LACP link protection for aggregated Ethernet interfaces on the chassis, use the **link-protection** statement at the **[edit chassis aggregated-devices ethernet lacp]** hierarchy level:

```
[edit chassis aggregated-devices ethernet lacp]
link-protection {
  non-revertive;
}
```

By default, LACP link protection reverts to a higher-priority (lower-numbered) link when that higher-priority link becomes operational or a link is added to the aggregator that is determined to be higher in priority. However, you can suppress link calculation by adding the **non-revertive** statement to the LACP link protection configuration. In nonrevertive mode, after a link is active and collecting and distributing packets, the subsequent addition of a higher-priority (better) link does not result in a switch, and the current link remains active.

BEST PRACTICE: (MX Series) In a highly scaled configuration over aggregated Ethernet, we recommend that you prevent the router from performing such a switch by including the non-revertive statement. Failure to do so may result in some traffic loss if a MIC on which a member interface is located reboots. Using the non-revertive statement for this purpose is not effective if both the primary and secondary interfaces are on the MIC that reboots.

CAUTION: If both ends of an aggregator have LACP link protection enabled, make sure to configure both ends of the aggregator to use the same mode. Mismatching LACP link protection modes can result in lost traffic.

Configuring System Priority

To configure LACP system priority for aggregated Ethernet interfaces on the chassis, use the **system-priority** statement at the **[edit chassis aggregated-devices ethernet lacp]** hierarchy level:

```
[edit chassis aggregated-devices ethernet lacp]
system-priority priority;
```

The system priority is a 2-octet binary value that is part of the LACP system ID. The LACP system ID consists of the system priority as the two most-significant octets and the interface MAC address as the six least-significant octets. The system with the numerically lower value for system priority has the higher priority. By default, system priority is 127, with a range of 0 through 65,535.

Configuring the Maximum Links Limit

To configure the maximum links limit, use the **maximum-links** statement at the **[edit chassis aggregated-devices]** hierarchy level:

```
[edit chassis aggregated-devices]
maximum-links maximum-links-limit;
```

Configuring PPM on Junos Fusion

If you use Junos Fusion with Junos OS Release 14.2R3, you need to ensure that link aggregation (and STP) work properly by configuring timers for the periodic packet management (PPM) daemons on the aggregation and satellite devices. We recommend using the following timer values:

```
[edit routing-options ppm]
   redistribution-timer 120;
   tcp-keepalive-interval 3000;
   tcp-keepalive-idle 3000;
```

Starting in Junos OS Release 14.2R4, the timer values that ensure proper link aggregation and STP functions are configured by default if you use Junos Fusion with Junos OS.

Release History Table

Release	Description
15.1F5	In Junos OS 15.1F5 and 15.1F6 releases, you can configure a maximum of 480 aggregated interfaces on MX240, MX480, and MX960 routers.
15.1F5	In Junos OS 15.1F5 and 15.1F6 releases, you can configure a maximum of 800 aggregated interfaces on MX2010 and MX2020 routers.
14.2R4	Starting in Junos OS Release 14.2R4, the timer values that ensure proper link aggregation and STP functions are configured by default if you use Junos Fusion with Junos OS.
14.2R3	In Junos release 14.2R3 and later, you can configure a maximum of 1000 aggregated interfaces on MX240, MX480, and MX960 routers.
14.2R3	In Junos release 14.2R3 and later, you can configure a maximum of 800 aggregated interfaces on MX2010 and MX2020 routers.
14.2R3	If you use Junos Fusion with Junos OS Release 14.2R3, you need to ensure that link aggregation (and STP) work properly by configuring timers for the periodic packet management (PPM) daemons on the aggregation and satellite devices.
14.2R2	In Junos release 14.2R2 and earlier, you can configure a maximum of 480 aggregated interfaces on MX Series routers.
13.2	For SONET/SDH, starting with Junos OS Release 13.2, the maximum number of logical interfaces is 64, numbered from **as0** through **as63**.

Related Documentation

- Configuring an Aggregated Ethernet Interface on page 875
- *Ethernet Interfaces Feature Guide for Routing Devices*
- *Configuring Aggregated Ethernet Interfaces on PTX Series Packet Transport Routers*
- *Configuring Aggregated SONET/SDH Interfaces*

CHAPTER 10

MAC Address Synchronization in a Junos Fusion

Understanding MAC Address Synchronization in a Junos Fusion

Understanding MAC Address Synchronization

In a Junos Fusion that is deployed in a dual-aggregation device topology, traffic on extended ports is load-balanced between the two aggregation devices. In this scenario, two potential problems might occur that can be solved with MAC address synchronization:

- Layer 2 unicast traffic received on an extended port enters one aggregation device while traffic leaving the extended port exits out of the other aggregation device. MAC learning only occurs on one aggregation device, which results in an unknown unicast flood on the other aggregation device.
- If one of the aggregation devices goes down, all multihomed extended port traffic is redirected to the other aggregation device, and MAC address are flooded until local MAC learning is completed.

In Junos Fusion Data Center with MC-LAG, the two aggregation devices use the Inter-Chassis Control Protocol (ICCP) to connect and maintain the Junos Fusion topology. With MAC address synchronization, the Layer 2 address learning process (L2ALD) synchronizes the MAC addresses that are learned on extended ports and uses ICCP to exchange information, such as a MAC address or an IRB MAC address, from one aggregation device to another. For ICCP to work, make sure that your aggregation devices are part of a redundancy group. See "Configuring or Expanding a Junos Fusion Data Center" on page 47 for information on how to configure a redundancy group. In Junos Fusion with EVPN, aggregation devices use BGP to distribute learned MAC addresses that are behind an extended port to other aggregation devices. MAC address synchronization is especially useful when a satellite device is multihomed to both aggregation devices because when a MAC address is learned on one of the extended ports on one aggregation device, the MAC address is synchronized to the other aggregation

device. MAC address synchronization requires no configuration because it is implicitly enabled.

NOTE: **Static MAC addresses are not synchronized.**

Troubleshooting MAC Address Synchronization

If MAC addresses are not being synchronized, verify the following items:

- Both aggregation devices are part of a redundancy group.

  A redundancy group is required for ICCP to work. See "Configuring or Expanding a Junos Fusion Data Center" on page 47 for information on how to configure a redundancy group.

- VLANs and extended ports are configured identically on both aggregation devices.

  To verify that the extended ports are configured identically, issue the **show chassis satellite** command on both aggregation devices.

  For example, issue the **show chassis satellite** command on aggregation-device1:

```
user@aggregation-device1> show chassis satellite
                          Device          Cascade      Port       Extended Ports
Alias            Slot     State           Ports        State      Total/Up
qfx5100-24q-01   100      Online          xe-0/0/1     online     9/2
                                         xe-1/3/0     online
qfx5100-24q-02   101      Online          xe-0/0/2     online     20/12
                                         xe-1/3/1     online
qfx5100-24q-03   102      Online          xe-0/0/3     online     16/6
                                         xe-1/3/2     online
qfx5100-24q-04   103      Online          xe-0/0/4     online     16/4
                                         xe-1/3/3     online
qfx5100-24q-05   104      Online          xe-0/0/5     online     13/3
                                         xe-1/3/4     online
qfx5100-24q-06   105      Online          xe-0/0/6     online     24/15
                                         xe-1/3/5     online
qfx5100-24q-07   106      Online          xe-0/0/7     online     24/15
                                         xe-1/3/6     online
qfx5100-24q-08   107      Online          xe-0/0/8     online     21/12
                                         xe-1/3/7     online
ex4300-01        109      Online          xe-1/0/1     online     49/2
ex4300-02        110      Online          xe-1/0/2     online     49/2
ex4300-03        111      Online          xe-1/0/3     online     49/2
ex4300-04        112      Online          xe-1/0/4     online     49/11
ex4300-05        113      Online          xe-1/0/5     online     49/11
ex4300-06        114      Online          xe-1/0/6     online     49/11
ex4300-07        115      Online          xe-1/0/7     online     49/11
ex4300-08        116      Online          xe-1/1/0     online     49/11
ex4300-09        117      Online          xe-1/1/1     online     49/11
ex4300-10        118      Online          xe-1/1/2     online     49/11
ex4300-11        119      Online          xe-1/1/3     online     49/11
ex4300-12        120      Online          xe-1/1/4     online     49/11
ex4300-13        121      Online          xe-1/1/5     online     49/11
ex4300-14        122      Online          xe-1/1/6     online     49/11
ex4300-15        123      Online          xe-1/1/7     online     49/11
ex4300-16        124      Online          xe-1/2/1     online     49/11
```

```
ex4300-17        125    Online          xe-1/2/2     online     49/11
ex4300-18        126    Online          xe-1/2/3     online     49/2
ex4300-19        127    Online          xe-1/2/4     online     49/1
ex4300-20        128    Online          xe-1/2/5     online     49/1
ex4300-21        129    Online          xe-1/2/6     online     49/1
ex4300-22        130    Online          xe-1/2/7     online     49/1
```

The output in **Extended Ports** field shows that extended ports are up on aggregation-device1.

- Source MAC addresses are learned by L2ALD.

  To verify that the source MAC addresses are learned by L2ALD, issue the **show ethernet-switching table** command on both aggregation devices.

  For example, issue the **show ethernet-switching table** command on aggregation-device1:

```
user@aggregation-device1> show ethernet-switching table
D - dynamic MAC, L - locally learned from PFE, R - Remotely learnt from other
AD
vlan_2001           00:23:01:00:00:01   DL            -   ae307.0
   0         0
vlan_2001           00:23:01:00:00:0e   DR            -   ae307.0
   0         0
vlan_2001           00:23:01:00:00:25   DLR           -   ae307.0
   0         0
```

  The output shows that MAC address 00:23:01:00:00:25 was learned remotely by the other aggregation device.

- ICCP is configured on both aggregation devices.

  To verify that ICCP is configured, issue the **show iccp** command on both aggregation devices.

  For example, issue the **show iccp** command on aggregation-device1:

```
user@aggregation-device1> show iccp
Redundancy Group Information for peer 172.16.32.5
  TCP Connection       : Established
  Liveliness Detection : Up

Backup liveness peer status: Up
  Redundancy Group ID          Status
    1                           Up

Client Application: lacpd
  Redundancy Group IDs Joined: 1

Client Application: l2ald_iccpd_client
  Redundancy Group IDs Joined: 1

Client Application: mclag_cfgchkd
  Redundancy Group IDs Joined: 1
```

  The output shows that all processes related to ICCP are up and running.

- Trace options are enabled for L2ALD and the Inter-Chassis Control Protocol process (ICCPD).

To enable trace options for L2ALD, issue the **set protocols l2-learning traceoptions** command.

To enable trace options for ICCPD, issue the **set protocols iccp traceoptions** command.

CHAPTER 11

VLAN Autosensing in a Junos Fusion

Understanding VLAN Autosensing

This topic discusses how VLAN autosensing provisions VLANs dynamically on extended ports as part of a Junos Fusion. It covers the following items:

Understanding VLAN Autosensing

VLAN autosensing allows extended ports on satellite devices in a Junos Fusion to provision VLANs dynamically, as needed, to preserve the VLAN memory of the aggregation device with no or minimal impact to the forwarding of VLAN traffic in the Junos Fusion. Because the number of extended ports can scale to more than 3000 ports in a Junos Fusion, the system must be able to automatically provision VLANs only when there is VLAN traffic on an extended port. VLAN membership remains provisioned until there is at least one MAC address learned on the VLAN that is provisioned on the extended port. When the last MAC address gets deleted or ages out, the VLAN membership is deleted after a fixed interval of time. The default aging-out time for VLAN membership is 600 seconds, but it can be modified by the configuration.

VLAN autosensing is supported on extended ports only, and only single VLAN-tagged packets are autosensed.

Configuring VLAN Autosensing

- To enable VLAN autosensing on an extended port, issue the **set interfaces** ***interface-name*** **unit** ***number*** **family ethernet-switching vlan-auto-sense** command.

For example:

```
user@switch# set interfaces xe-101/0/0 unit 0 family ethernet-switching
  vlan-auto-sense
```

- To specify the number of seconds for which the VLAN members are retained after the last source MAC address is deleted or aged out, issue the **set forwarding-options satellite vlan-auto-sense expiry-time *seconds*** command.

  The default aging-out time for VLAN membership is 600 seconds.

  For example:

```
user@switch# set forwarding-options satellite vlan-auto-sense expiry-time 600
```

See Also

-

Clearing VLAN Members Learned by VLAN Autosensing

You can clear VLAN members either globally, per extended port, or per Flexible PIC Concentrator (FPC).

For example, to clear VLAN members on an extended port, issue the **clear ethernet-switching satellite vlan-auto-sense interface *name*** command.

For example:

```
user@switch> clear ethernet-switching satellite vlan-auto-sense interface xe-101/0/1
```

See Also

- vlan-auto-sense (Interfaces) on page 886
- vlan-auto-sense (Satellite) on page 887
- clear ethernet-switching satellite vlan-auto-sense on page 888

vlan-auto-sense (Interfaces)

Syntax vlan-auto-sense;

Hierarchy Level [edit interfaces unit *unit-number* family ethernet-switching]

Release Information Statement introduced in Junos OS Release 17.2R1 for Junos Fusion Data Center.

Description Enable automatic provisioning of VLAN members only when VLAN traffic is detected on extended ports in a Junos Fusion.

Required Privilege Level admin—To view this statement in the configuration.
admin-control—To add this statement to the configuration.

Related Documentation

- Understanding VLAN Autosensing on page 885

vlan-auto-sense (Satellite)

Syntax

```
vlan-auto-sense {
   expiry-time seconds;
}
```

Hierarchy Level

[edit forwarding-options satellite]

Release Information

Statement introduced in Junos OS Release 17.2R1 for Junos Fusion Data Center.

Description

Configure the duration of time for which the VLAN members are retained after the last source MAC address is deleted or ages out. The default time is 600 seconds.

Options

expiry-time *seconds*—Specify the number of seconds for which VLAN members are retained after the last source MAC address is deleted or ages out.

Required Privilege Level

admin—To view this statement in the configuration.
admin-control—To add this statement to the configuration.

Related Documentation

- Understanding VLAN Autosensing on page 885

clear ethernet-switching satellite vlan-auto-sense

Syntax clear ethernet-switching satellite vlan-auto-sense
<interface *interface-name* | fpc *slot-number*>

Release Information Command introduced in Junos OS Release 17.2R1 for Junos Fusion Data Center.

Description Clear VLAN members learned by VLAN autosensing either globally, per extended port, or per Flexible PIC Concentrator (FPC).

Options

interface *interface-name*—(Optional) Clear VLAN members learned by VLAN autosensing per interface.

fpc *slot-number*—(Optional) Clear VLAN members learned by VLAN autosensing per Flexible PIC Concentrator (FPC).

Required Privilege Level view

Related Documentation

- Understanding VLAN Autosensing on page 885

List of Sample Output

Sample Output

clear ethernet-switching satellite vlan-auto-sense

```
user@switch> clear ethernet-switching satellite vlan-auto-sense
```

clear ethernet-switching satellite vlan-auto-sense interface interface-name

```
user@switch> clear ethernet-switching satellite vlan-auto-sense interface xe-100/0/1
```

clear ethernet-switching satellite vlan-auto-sense fpc slot-number

```
user@switch> clear ethernet-switching satellite vlan-auto-sense fpc slot 100
```


show ethernet-switching interfaces satellite

Syntax

show ethernet-switching interfaces satellite
<brief | detail | extensive>
<interface *interface-name*>
<fpc *slot-number*>

Release Information

Command introduced in Junos OS Release 17.2R1 for Junos Fusion Data Center.

Description

Display information about Ethernet switching interfaces and VLAN memberships. This command displays both static and autosensed VLAN members.

NOTE: **The brief, detail, and extensive options do not provide different output from that of specifying no options.**

Options

none—Display information for Ethernet switching extended ports globally.

brief | detail | extensive—(Optional) Display the specified level of output.

fpc *slot-number*—(Optional) Display information for Ethernet switching extended ports on a Flexible Port Concentrator (FPC).

interface-name *interface-name*—(Optional) Display information for a specific Ethernet switching extended port.

Required Privilege Level

view

Related Documentation

- Understanding VLAN Autosensing on page 885

List of Sample Output

show ethernet-switching interfaces satellite on page 890
show ethernet-switching interfaces satellite interface-name on page 890
show ethernet-switching interfaces satellite fpc on page 890

Output Fields

Table 40 on page 889 lists the output fields for the **show ethernet-switching interfaces satellite** command. Output fields are listed in the approximate order in which they appear.

Table 40: show ethernet-switching interfaces satellite Output Fields

Field Name	Field Description
Interface	Name of extended port.
Instance	Name of the virtual switch instance.

Table 40: show ethernet-switching interfaces satellite Output Fields (continued)

Field Name	Field Description
Port mode	The **access** mode is the port mode default and works with a single VLAN. Port mode can also be **trunk**, which accepts tagged packets from multiple VLANs on other switches. The third port mode value is **tagged-access**, which accepts tagged packets from access devices.
Autosense	Displays whether VLAN autosense is enabled or disabled.
VLAN	Names of VLANs that belong to a particular extended port.

Sample Output

show ethernet-switching interfaces satellite

```
user@switch> show ethernet-switching interfaces satellite
Interface        Instance         PORT-MODE        Auto-Sense       VLAN
xe-101/0/16.0    default-switch   TRUNK            ENABLE
                                                                      default
xe-101/0/48:3.0  default-switch   TRUNK            ENABLE
                                                                      default
```

show ethernet-switching interfaces satellite interface-name

```
user@switch> show ethernet-switching interfaces satellite interface-name xe-101/0/16
Interface        Instance         PORT-MODE        Auto-Sense       VLAN
xe-101/0/16.0    default-switch   TRUNK            ENABLE
                                                                      default
```

show ethernet-switching interfaces satellite fpc

```
user@switch>show ethernet-switching interfaces satellite fpc 101
Interface        Instance         PORT-MODE        Auto-Sense       VLAN
xe-101/0/16.0    default-switch   TRUNK            ENABLE
                                                                      default
xe-101/0/48:3.0  default-switch   TRUNK            ENABLE
                                                                      default
```

show vlans satellite

Syntax

show vlans satellite
[brief | detail | extensive]
<fpc-*fpc-slot*>
<vlan-name *vlan-name*>

Release Information

Command introduced in Junos OS Release 17.2R1 for Junos Fusion Data Center.

Description

Display information for VLANs and VLAN memberships.

NOTE: The **brief**, **detail**, and **extensive** options do not provide different output from that of specifying no options.

Options

none—Display information for all VLAN memberships.

brief | detail | extensive—(Optional) Display the specified level of output.

fpc *slot-number*—(Optional) Display information for VLAN memberships on a Flexible Port Concentrator (FPC).

vlan-name *vlan-name*—(Optional) Display information for a specific VLAN.

Required Privilege Level

view

Related Documentation

- Understanding VLAN Autosensing on page 885

List of Sample Output

show vlans satellite on page 892
show vlans satellite fpc 101 on page 892
show vlans satellite vlan-name v100 on page 892

Output Fields

Table 41 on page 891 lists the output fields for the **show vlans satellite** command. Output fields are listed in the approximate order in which they appear.

Table 41: show vlans satellite Output Fields

Field Name	Field Description
Instance	Name of the virtual switch instance.
VLAN name	Names of VLANs that belong to the extended port.
Tag	The 802.1Q tag applied to this VLAN. If none is displayed, no tag is applied.

Table 41: show vlans satellite Output Fields (continued)

Field Name	Field Description
Interfaces	Interface associated with learned MAC addresses or all-members (flood entry).

Sample Output

show vlans satellite

```
user@switch> show vlans satellite
Instance        VLAN name           Tag         Interfaces
default-switch  vlan100              100      xe-100/0/1.0 (AS)
                                   xe-101/0/2.0 (AS)
```

Sample Output

show vlans satellite fpc 101

```
user@switch> show vlans satellite fpc 101
Instance        VLAN name           Tag         Interfaces
default-switch  default             1
                                                xe-101/0/16.0 (AS)
                                                xe-101/0/48:3.0 (AS)
```

Sample Output

show vlans satellite vlan-name v100

```
user@switch> show vlans satellite vlan-name v100
Instance        VLAN name           Tag         Interfaces
default-switch  default             1
                                                ae9.0
                                                xe-101/0/16.0 (AS)
                                                xe-101/0/48:3.0 (AS)
```

CHAPTER 12

SNMP MIB Support on Junos Fusion Data Center

Chassis MIB Support (Junos Fusion)

The Chassis MIB has been enhanced to enable satellite devices to be represented in the chassis MIB. Satellite devices are represented as FPCs/slots (100, 101,102,..) in the aggregation device. The support is enabled using a separate range of container indices (CIDX), which allows the SNMP process to redirect relevant SNMP requests to the satellite device management process.

The CIDX for representing satellite device hardware components in Junos Fusion are offset by 100 from indices for hardware components on Junos devices; for example a regular CIDX 2 (Power Supply) is 102 for the power supply of the satellite device. Using these indices you can distinguish the satellite device hardware from the aggregate device. The L1 index for satellite device entries refers to their FPC slot identifiers. As per the chassis MIB convention, identifiers are 1-based. For example, satellite device 100 will have an L1 index of 101, satellite device 101 will have an L1 index of 102, and so on.

Table 42 on page 893shows the CIDXs used for satellite devices.

Table 42: CIDX's for Satellite Devices

CIDX	Component Type
102	Power Supply
104	Fan
107	FPC
108	PIC

The following tables have been enhanced to include object IDs for satellite devices:

- jnxContainersTable
- jnxContentsTable

- jnxFilledTable
- jnxOperatingTable
- jnxFRUTable

Examples of new object IDs in the jnxContainersTable:

```
jnxContainersType.102 = jnxSatelliteDeviceSlotPower.0
jnxContainersType.104 = jnxSatelliteDeviceSlotFan.0
jnxContainersType.107 = jnxSatelliteDeviceSlotFPC.0
jnxContainersType.108 = jnxSatelliteDeviceMediaCardSpacePIC.0
…
…
jnxContainersDescr.102 = SD PEM slot
jnxContainersDescr.104 = SD FAN slot
jnxContainersDescr.107 = SD FPC slot
jnxContainersDescr.108 = SD PIC slot
```

Examples of new object IDs in the jnxContentsTable:

```
jnxContentsType.102.102.1.0 = jnxSatelliteDeviceSlotPower
jnxContentsType.102.102.2.0 = jnxSatelliteDeviceSlotPower
jnxContentsType.104.102.1.0 = jnxSatelliteDeviceSlotFan
jnxContentsType.104.102.2.0 = jnxSatelliteDeviceSlotFan
jnxContentsType.104.102.3.0 = jnxSatelliteDeviceSlotFan
jnxContentsType.104.102.4.0 = jnxSatelliteDeviceSlotFan
jnxContentsType.104.102.5.0 = jnxSatelliteDeviceSlotFan
jnxContentsType.107.102.0.0 = jnxSatelliteDeviceSlotFPC
jnxContentsType.108.102.1.0 = jnxSatelliteDeviceMediaCardSpacePIC

…
jnxContentsDescr.102.102.1.0 = SD101 PEM 0
jnxContentsDescr.102.102.2.0 = SD101 PEM 1
jnxContentsDescr.104.102.1.0 = SD101 Fan Tray 0
jnxContentsDescr.104.102.2.0 = SD101 Fan Tray 1
jnxContentsDescr.104.102.3.0 = SD101 Fan Tray 2
jnxContentsDescr.104.102.4.0 = SD101 Fan Tray 3
jnxContentsDescr.104.102.5.0 = SD101 Fan Tray 4
jnxContentsDescr.107.102.0.0 = SD101 FPC: QFX5100-48S-6Q @ 101/*/*
jnxContentsDescr.108.102.1.0 = SD101 PIC: 48x10G-6x40G @ 101/0/*
```

The following SNMP traps are generated for Satellite Devices, which are also logged as syslog messages:

- Satellite Device (as FPC) add (online) or remove
- Satellite Device Fan add (online) or remove
- Satellite Device PSU add (online) or remove
- Satellite Device PIC add (online) or remove
- Satellite Device FAN failure or status
- Satellite Device PSU failure or status

Table 43 on page 895 shows the SNMP traps that can be generated for satellite devices.

Table 43: SNMP Traps Generated for Satellite Devices

Trap	Condition
jnxFruRemoval	Sent when the specified FRU (FAN/PSU) has been removed from the chassis, or the satellite device has been removed from the aggregation device's database
jnxFruInsertion	Sent when the specified FRU (FAN/PSU) has been inserted into the satellite device
jnxFruPowerOff	Sent when the specified FRU (FAN/PSU) has been powered off in the satellite device
jnxFruPowerOn	Sent when the specified FRU (FAN/PSU) has been powered on in the satellite device
jnxFruFailed	Sent when the specified FRU (FAN/PSU) has failed in the satellite device. Typically, this is due to the FRU not powering up or being unable to load software. FRU replacement might be required
jnxFruOK	
jnxFruOffline	Sent when FPC's new reported state is not online or PSU/FAN/PIC is not present due to satellite device removal
jnxFruOnline	Sent when specified FRU (FPC,PIC,PSU,FAN) gets added in the aggregation device database
jnxFruCheck	Sent when the specified FRU (FAN/PSU) has encountered operational errors

Given below are examples of the system log messages generated:

```
messages:Apr 15 21:28:36  card spmd[6706]: SPMD_SNMP_TRAP10: SNMP trap generated:
 Fru Offline (jnxFruContentsIndex 102, jnxFruL1Index 109, jnxFruL2Index 1,
jnxFruL3Index 0, jnxFruName SD108 PEM 0, jnxFruType 7, jnxFruSlot 0,
jnxFruOfflineReason 1, jnxFruLastPowerOff 0, jnxFruLastPowerOn 0)
```

```
messages:Apr 15 21:28:36  card spmd[6706]: SPMD_SNMP_TRAP10: SNMP trap generated:
 Fru Offline (jnxFruContentsIndex 104, jnxFruL1Index 109, jnxFruL2Index 1,
jnxFruL3Index 1, jnxFruName SD108 Fan Tray 0, jnxFruType 13, jnxFruSlot 0,
jnxFruOfflineReason 1, jnxFruLastPowerOff 0, jnxFruLastPowerOn 0)
```

```
messages:Apr 15 21:28:57  card spmd[8847]: SPMD_SNMP_TRAP7: SNMP trap generated:
 Fru Online (jnxFruContentsIndex 107, jnxFruL1Index 103, jnxFruL2Index 0,
jnxFruL3Index 0, jnxFruName SD102 FPC:  @ 102/*/*, jnxFruType 3, jnxFruSlot 102)
```

```
messages:Apr 15 21:28:36  card spmd[6706]: SPMD_SNMP_TRAP10: SNMP trap generated:
 Fru Offline (jnxFruContentsIndex 108, jnxFruL1Index 109, jnxFruL2Index 1,
jnxFruL3Index 0, jnxFruName SD108 PIC: 48x 10/100/1000 Base-T @ 108/0/*, jnxFruType
 11, jnxFruSlot 0, jnxFruOfflineReason 1, jnxFruLastPowerOff 0, jnxFruLastPowerOn
 0)
```

CHAPTER 13

DHCP Relay on Junos Fusion Data Center

Understanding DHCP Relay in Junos Fusion Data Center

A Dynamic Host Control Protocol (DHCP) relay agent is any host that forwards DHCP packets between clients and servers. Relay agents are used to forward requests and replies between clients and servers when they are not on the same physical subnet.

The general functionality of DHCP relay for Junos Fusion Data Center with a single aggregation device is the same as for standalone QFX switches. See *DHCP and BOOTP Relay Overview* for a detailed overview of DHCP relay on standalone QFX Series switches.

In a Junos Fusion Data Center with two or more aggregation devices, there are special considerations for DHCP relay. This topic covers:

DHCP Relay Packet Flow

In a Junos Fusion topology with two or more aggregation devices, each aggregation device acts independently as a DHCP relay agent. When the client sends a DHCP DISCOVER packet, it is broadcast to all aggregation devices, which relay the packet to the DHCP server. The DHCP server receives as many DHCP DISCOVER packets as the number of aggregation devices for the same client. Each packet has a different gateway address (giaddr) but all have the same client identifier.

The DHCP server sends a separate DHCP OFFER packet to each aggregation device in response, offering the same IP address for the client. Each of the aggregation devices forwards the packet to the client. If an aggregation device is not connected directly to the client, the packet is switched through the MC-LAG or EVPN core.

DHCP Option 82

The DHCP relay agent adds the relay agent information option (option 82) to the packet before forwarding it to the DHCP server. The circuit ID sub-option contains the local identifier of the circuit where the initial request packet was received from the client. In a

Junos Fusion, option 82 is required for the DHCP relay agent to map the DHCP server response to the client interface.

DHCP Relay Configuration

You configure DHCP relay at the [**edit forwarding-options dhcp-relay**] hierarchy level. DHCP relay configuration on an extended port in a Junos Fusion is identical for a standalone QFX Series switch, with the following caveats for configuring DHCP relay in a Junos Fusion topology with two or more aggregation devices:

- DHCP relay configuration must be synced across the aggregation devices.
- Only stateless DHCP relay is supported.
- Creating a subscriber session on the aggregation devices is not supported.

  NOTE: In the case where the client and server reside on different VRFs, you must configure the forward-only option to ensure that DHCP relay agent does not create a new session or perform any other subscriber management operations (such as creating dynamic interfaces or maintaining leases).

- The DHCP server cannot be behind a VXLAN tunnel.

Related Documentation

- *DHCP and BOOTP Relay Overview*

CHAPTER 14

LLDP and LLDP-MED on Junos Fusion Data Center

Understanding LLDP and LLDP-MED on a Junos Fusion

This topic describes Link Layer Discovery Protocol (LLDP) and Link Layer Discovery Protocol–Media Endpoint Discovery (LLDP-MED) in a Junos Fusion.

This topic covers:

LLDP and LLDP-MED in a Junos Fusion Overview

LLDP and LLDP-MED are used to learn and distribute device information on network links. The information enables the switch to quickly identify a variety of devices, resulting in a LAN that interoperates smoothly and efficiently.

LLDP-capable devices transmit information in type, length, and value (TLV) messages to neighbor devices. Device information can include information such as chassis and port identification and system name and system capabilities. The TLVs leverage this information from parameters that have already been configured in the Junos operating system (Junos OS).

Many LLDP and LLDP-MED concepts for standalone EX Series switches that support the features also apply to LLDP and LLDP-MED on Junos Fusion . See *Understanding LLDP and LLDP-MED on EX Series Switches* for a detailed overview of LLDP and LLDP-MED on standalone EX Series switches.

NOTE: **LLDP-MED goes one step further than LLDP, exchanging IP-telephony messages between the switch and the IP telephone. LLDP-MED is an important access layer switch feature that is supported in a Junos Fusion despite not being supported on a standalone EX9200 switch.**

Understanding LLDP and LLDP-MED Configuration and Traffic Handling in a Junos Fusion

LLDP and LLDP-MED traffic is generally handled the same in a Junos Fusion or a standalone series switch. LLDP and LLDP-MED configuration on an extended port in a Junos Fusion is identical for a standalone EX Series switch. See *Configuring LLDP (CLI Procedure)* or *Configuring LLDP-MED (CLI Procedure)*.

The following specifications apply to the device information transmitted by LLDP and LLDP-MED in a Junos Fusion topology with two or more aggregation devices:

- Management address TLVs are merged into a single packet in such a way that the packet contains two or more management address TLVs.
- The SNMP index used as the port ID TLV is derived so that all aggregation devices receive the same index value for port IDs of extended ports.
- The system name for extended ports is the configured redundancy group name. A redundancy group has to be configured in order to enable a topology with two or more aggregation devices.
- The chassis ID is the same for all aggregation devices. If a system MAC address is defined for the redundancy group, is it used as the chassis ID. The system MAC address is configured using the **set chassis satellite-management redundancy-groups *redundancy-group-name* system-mac-address *system-mac-address*** command. If the system MAC is not configured, the chassis ID is the default MAC address, which is 00:00:00:00:00:01.

BEST PRACTICE: We recommend specifying a system MAC address if you are running LLDP or LLCP-MED traffic in your Junos Fusion topology.

Related Documentation

- *Configuring LLDP (CLI Procedure)*
- *Configuring LLDP-MED (CLI Procedure)*

CHAPTER 15

DCBX on Junos Fusion Data Center

Understanding DCBX on Junos Fusion Data Center

This topic describes support for Data Center Bridging Capability Exchange protocol (DCBX) on Junos Fusion Data Center, and includes the following sections:

DCBX Overview on Junos Fusion Data Center

Data Center Bridging Capability Exchange protocol (DCBX) discovers the data center bridging (DCB) capabilities of connected peers. DCBX also advertises the capabilities of applications on interfaces by exchanging application protocol information through application type, length, and value (TLV) elements. DCBX is an extension of Link Layer Discovery Protocol (LLDP), so LLDP must remain enabled on interfaces on which you want to use DCBX. Junos Fusion Data Center uses DCBX and other Data Center Bridging (DCB) features such as Priority Flow Control (PFC) to support Fibre Channel over Ethernet (FCoE) traffic forwarding.

Configuring DCBX for Junos Fusion Data Center extended port interfaces is the same as configuring DCBX for interfaces on standalone QFX Series switches. For details, see *Understanding DCBX* and *Configuring the DCBX Mode*.

Understanding DCBX Traffic Handling on Junos Fusion Data Center

Junos Fusion Data Center DCBX traffic is generally handled the same as on a standalone QFX series switch, but has some accommodations for the Junos Fusion Data Center architecture.

Extended ports are accessed through satellite devices that are dual-homed or multi-homed to more than one aggregation device operating in active-active mode. For DCBX operation, each aggregation device maintains a DCBX state machine, and the satellite devices act as proxy devices relaying LLDP packets with DCBX TLVs from the

aggregation devices to the DCBX peer. In general, the aggregation devices communicate the same DCBX TLVs because they all have the same configured and operational DCBX parameters.

When using DCBX in IEEE DCBX mode, the satellite device merges the DCBX TLV information from the aggregation devices into a single packet before forwarding it to the peer.

When using DCBX in DCBX Version 1.01 mode, the satellite device cannot simply merge DCBX TLV information because the DCBX *SeqNo* Control TLV can possibly become out-of-sync among different aggregation devices. The SeqNo value in the DCBX state machine is updated each time an exchanged DCB TLV parameter changes. Among Junos Fusion Data Center aggregation devices, the SeqNo value might become out-of-sync if the controlling process or an aggregation device is restarted. As a result, the satellite device maintains the SeqNo field value locally for each extended port interface with DCBX configured, and writes the local SeqNo value in the DCBX packet to the peer after merging the DCBX TLVs from the aggregation devices. The DCBX peer sees only the local satellite device SeqNo, and sends acknowledgement messages for that SeqNo.

The satellite device also maintains a table mapping local SeqNo values to each aggregation device state machine's DCBX SeqNo value. Upon receiving a DCBX TLV with an AckNo field from the peer (an acknowledgement corresponding to the most recently-handled local SeqNo), the satellite device looks up the stored SeqNo mapping for the corresponding aggregation device and rewrites the DCBX AckNo field with the mapped value before relaying the packet to that aggregation device.

Starting in Junos OS Release 17.2R1 and until Junos OS Release 18.1R2 on Junos Fusion Data Center with MC-LAG for dual aggregation devices, the output of the **show dcbx neighbors interface** ***interface-name*** command for DCBX Version 1.01 mode displays the satellite device SeqNo value and both aggregation device SeqNo values in the **Local-Advertisement** section. Refer to the following sample output:

```
user@switch> show dcbx neighbors interface xe-100/0/16.0
Interface : xe-100/0/16.0
    Active-application-map: iscsi-map
    Protocol Mode: DCBX Version 1.01
    Protocol-State: in-sync

    Local-Advertisement:
        Operational version: 0
        sequence-number: 3, acknowledge-id: 6
        satellite sequence-number: 5, peer-chassis sequence-number: 4

    Peer-Advertisement:
        Operational version: 0
        sequence-number: 6, acknowledge-id: 3
```

The **sequence-number** output field shows the aggregation device SeqNo value, the **satellite sequence-number** output field shows the satellite device local SeqNo value, and the **peer-chassis sequence-number** output field shows the SeqNo value on the *other* aggregation device (the peer aggregation device in the Junos Fusion Data Center MC-LAG topology). For a DCBX TLV exchange based on the sample output above, when the

satellite device receives a DCBX TLV packet from the DCBX peer with an AckNo value of 5 acknowledging that DCBX TLV information with SeqNo 5 was handled, the satellite device maps the AckNo field to the value 3 (the corresponding aggregation device's SeqNo value) before relaying it to the aggregation device. Similarly, the satellite device maps that field to the value 4 (the peer aggregation device's SeqNo value) before relaying it to the peer Junos Fusion Data Center aggregation device.

Starting in Junos OS Release 18.1R2-S2 on Junos Fusion Data Center with EVPN, which supports up to 4 aggregation devices, the **show dcbx neighbors** command does not display a **peer-chassis sequence-number** output field because there can be multiple additional aggregation devices with different SeqNo values. The satellite device maintains the sequence number mappings for all aggregation devices locally, and rewrites the SeqNo and AckNo fields before relaying DCBX packets to an aggregation device or DCBX peer as required. The **show dcbx neighbors** command displays only the **sequence-number** local to the aggregation device and the **satellite sequence-number** local to the satellite device, as follows:

```
user@switch> show dcbx neighbors interface xe-150/0/18.0
Interface : xe-150/0/18.0
    Active-application-map: iscsi-map
    Protocol Mode: DCBX Version 1.01
    Protocol-State: in-sync

    Local-Advertisement:
        Operational version: 0
        sequence-number: 3, acknowledge-id: 6
        satellite sequence-number: 5

    Peer-Advertisement:
        Operational version: 0
        sequence-number: 6, acknowledge-id: 3
```

Understanding Satellite Device DCBX TLV Inspection to Enable and Disable PFC

When PFC is enabled on an interface, standalone QFX series switches use DCBX to exchange PFC TLVs with a DCBX peer. DCBX uses auto-negotiation to operationally enable PFC in the hardware if the PFC capabilities and parameters on the switch match those advertised by the DCBX peer, or disable PFC if they do not match. In this context, enabled or disabled represents the PFC operational state. PFC must be configured on an interface and also operationally enabled for the feature to affect traffic on an interface for a configured priority and code point.

When DCBX and PFC are configured for Junos Fusion Data Center extended port interfaces, although the aggregation devices run the DCBX state machine, the satellite devices need the same type of information to operationally enable or disable PFC in the hardware locally for an extended port. Because the satellite devices relay DCBX packets for the aggregation devices, the satellite devices get this information by snooping into the PFC TLVs in the DCBX packets exchanged between the aggregation device and the DCBX peer. If the PFC parameters from the aggregation device and DCBX peer do not match, the satellite device can signal the hardware to disable PFC. When either the aggregation device or the DCBX peer indicates updated TLVs so the PFC parameters match, the satellite device can enable PFC.

See "Configuring CoS in Junos Fusion Data Center" on page 1040 for details on configuring and enabling PFC on extended ports.

Release History Table

Release	Description
18.1R2-S2	Starting in Junos OS Release 18.1R2-S2 on Junos Fusion Data Center with EVPN, which supports up to 4 aggregation devices, the **show dcbx neighbors** command does not display a **peer-chassis sequence-number** output field because there can be multiple additional aggregation devices with different SeqNo values.
17.2R1	Starting in Junos OS Release 17.2R1 and until Junos OS Release 18.1R2 on Junos Fusion Data Center with MC-LAG for dual aggregation devices, the output of the **show dcbx neighbors interface *interface-name*** command for DCBX Version 1.01 mode displays the satellite device SeqNo value and both aggregation device SeqNo values in the **Local-Advertisement** section.

Related Documentation

- *Understanding DCBX*
- *Configuring the DCBX Mode*
- Configuring CoS in Junos Fusion Data Center on page 1040

show dcbx neighbors

Syntax

show dcbx neighbors
<**interface** *interface-name*>
<**terse**>

Release Information

Command introduced in Junos OS Release 11.1 for the QFX Series.
Command introduced in Junos OS Release 11.3 for EX Series switches.

Description

Display information about Data Center Bridging Capability Exchange protocol (DCBX) neighbor interfaces.

Options

none—Display information about all DCBX neighbor interfaces.

interface-name—(Optional) Display information for the specified interface.

terse—Display the specified level of output.

Required Privilege Level

view

Related Documentation

- *Configuring DCBX Autonegotiation*
- *Example: Configuring DCBX Application Protocol TLV Exchange*
- *Example: Configuring an FCoE Transit Switch*
- *Example: Configuring DCBX to Support an iSCSI Application*
- *Understanding DCB Features and Requirements*
- *Understanding Data Center Bridging Capability Exchange Protocol for EX Series Switches*
- Understanding DCBX on Junos Fusion Data Center on page 901
- *dcbx*

List of Sample Output

show dcbx neighbors interface (Junos Fusion Data Center, DCBX Version 1.01 Mode) on page 920
show dcbx neighbors interface (QFX Series, DCBX Version 1.01 Mode) on page 924
show dcbx neighbors interface (QFX Series, IEEE DCBX Mode) on page 925
show dcbx neighbors terse (QFX Series) on page 927
show dcbx neighbors (EX4500 Switch: FCoE Interfaces on Both Local and Peer with PFC Configured Compatibly) on page 928
show dcbx neighbors (EX4500 Switch: DCBX Interfaces on Local and Peer Are Configured Compatibly with iSCSI Application) on page 929
show dcbx neighbors (EX4500 Switch: Includes ETS) on page 930

Output Fields

Table 44 on page 906 lists the output fields for the **show dcbx neighbors** command. Output fields are listed in the approximate order in which they appear.

Table 44: show dcbx neighbors Output Fields

Field Name	Field Description
Interface	Name of the interface.
Parent Interface	Name of the link aggregation group (LAG) interface to which the DCBX interface belongs.
Active-application-map	Name of the application map applied to the interface.
Protocol-Mode	(QFX Series) DCBX protocol mode the interface uses: • IEEE DCBX Version—The interface uses IEEE DCBX mode. • DCBX Version 1.01—The interface uses DCBX version 1.01. NOTE: On interfaces that use the IEEE DCBX mode, the **show dcbx neighbors interface *interface-name*** operational command does not include application, PFC, or ETS operational state in the output.
Protocol-State	(DCBX Version 1.01 only) DCBX protocol state synchronization status: • **in-sync**—The local interface received an acknowledge message from the peer to indicate that the peer received a state change message sent by the local interface. • **ack-pending**—The local interface has not yet received an acknowledge message from the peer to indicate that the peer received a state change message sent by the local interface.

Table 44: show dcbx neighbors Output Fields (continued)

Field Name		Field Description
Local-Advertisement		(DCBX Version 1.01 only) Status of advertisements that the local interface sends to the peer.
	Operational version	Version of the DCBX standard used.
	sequence-number	Number of state change messages sent to the peer. If the interface **Protocol-State** value is **in-sync**, this number should match the **acknowledge-id** number in the **Peer-Advertisement** section. If the interface **Protocol-State** value is **ack-pending**, this number does not match the **acknowledge-id** number in the **Peer-Advertisement** section. On Junos Fusion Data Center, this field represents the number of DCBX state changes maintained by an aggregation device, which might differ among the aggregation devices in the system. Satellite devices acting as proxy DCBX peers for the aggregation devices maintain a local sequence number (see **satellite sequence-number** output field) that maps to this value for each aggregation device. In this way, the satellite device presents a consistent sequence number for DCBX TLV traffic to and from the DCBX peer.
	acknowledge-id	Number of acknowledge messages received from the peer. If the **Protocol-State** value is **in-sync**, this number should match the **sequence-number** value in the **Peer-Advertisement** section. If the **Protocol-State** value is **ack-pending**, this number does not match the **sequence-number** value in the **Peer-Advertisement** section. Similar to the **sequence-number** field, this field represents the number of received DCBX acknowledge messages maintained by an aggregation device on Junos Fusion Data Center, which might differ among the aggregation devices in the system. Satellite devices acting as proxy DCBX peers for the aggregation devices map **acknowledge-id** values in received DCBX packets to the equivalent **sequence-number** value actually being acknowledged for each aggregation device.
	satellite sequence-number	

Table 44: show dcbx neighbors Output Fields (continued)

Field Name		Field Description
		(Junos Fusion Data Center only) Count of state change messages to the DCBX peer maintained locally on the Junos Fusion satellite device, as compared to the count maintained on the aggregation device displayed in this section's **sequence-number** output field. Satellite devices act as proxy DCBX peers for the aggregation devices, and map received DCBX **acknowledge-id** values (corresponding to local satellite sequence number values) to the equivalent aggregation device **sequence-number** value being acknowledged for each aggregation device. The **satellite sequence-number** field shows the local satellite device sequence number value actually being exchanged with the DCBX peer.
	peer-chassis sequence-number	(Junos Fusion Data Center, starting in Junos OS Release 17.2R1 up until Junos OS Release 18.1R2-S2) Count of state change messages to the DCBX peer maintained by the other aggregation device in the system, as compared to the **sequence-number** output field in this section. Satellite devices acting as proxy DCBX peers for the aggregation devices map received DCBX **acknowledge-id** values to the equivalent **sequence-number** value being acknowledged for each aggregation device. The **satellite sequence-number** field shows the local satellite device sequence number value actually being exchanged with the DCBX peer. This field is not displayed starting with Junos OS Release 18.1R2-S2 on Junos Fusion Data Center.

Table 44: show dcbx neighbors Output Fields (continued)

Field Name		Field Description
Peer-Advertisement		(DCBX Version 1.01 only) Status of advertisements that the peer sends to the local interface.
	Operational version	Version of the DCBX standard used.
	sequence-number	Number of state change messages the peer sent to the local interface. If this number matches the **acknowledge-id** number in the **Local-Advertisement** field, this indicates that the local interface has acknowledged all of the peer's state change messages and is synchronized. If this number does not match the **acknowledge-id** number in the **Local-Advertisement** field, this indicates that the peer has not yet received an acknowledgment for a state change message from the local interface.
	acknowledge-id	Number of acknowledge messages the peer has received from the local interface. If this number matches the **sequence-number** value in the **Local-Advertisement** field, this indicates that the peer has acknowledged all of the local interface's state change messages and is in synchronization. If this number does not match the **sequence-number** value in the **Local-Advertisement** field, this indicates that the peer has not yet sent an acknowledgment for a state change message from the local interface.

Table 44: show dcbx neighbors Output Fields (continued)

Field Name			Field Description
Feature: PFC			Priority-based flow control (PFC) feature DCBX state information.
	Protocol-State		(DCBX Version 1.01 only) DCBX protocol state synchronization status: • **ack-pending**—The local interface has not yet received an acknowledge message from the peer to indicate that the peer received a PFC state change message sent by the local interface. • **in-sync**—The local interface received an acknowledge message from the peer to indicate that the peer received a PFC state change message sent by the local interface. • **not-applicable**—PFC autonegotiation is disabled.
	Operational State		(DCBX Version 1.01 only) Operational state of the feature: **enabled** or **disabled**.
	Local-Advertisement		Status of advertisements that the local interface sends to the peer.
		Enable	(DCBX Version 1.01 only) State that the local interface advertises to the peer: • **Yes**—The feature is enabled. • **No**—The feature is disabled.
		Willing	Willingness of the local interface to learn the PFC configuration from the peer using DCBX: • **Yes**—The local interface is willing to learn the PFC configuration from the peer. • **No**—The local interface is not willing to learn the PFC configuration from the peer.
		Mac auth Bypass Capability	(IEEE DCBX only) (QFX Series) Media access controller (MAC) authentication bypass provides access to devices based on MAC address authentication. This is not supported, so the only value seen in the local advertisement field is **no**.
		Error	(DCBX Version 1.01 only) Configuration compatibility error status: • **No**—No error detected. Local and peer configuration are compatible. • **Yes**—Error detected. Local and peer configuration are not compatible.

Table 44: show dcbx neighbors Output Fields (continued)

Field Name			Field Description
		Operational State	PFC operational state on the interface: • Enabled—PFC is enabled on the interface • Disabled—PFC is disabled on the interface
		Maximum Traffic Classes capable to support PFC	Largest number of traffic classes the local interface supports for PFC: • **6** (EX Series switches) • **6** (QFX Series)
		Code Point	PFC code point, which is specified in the 3-bit class-of-service field in the VLAN header.
		Admin Mode	PFC administrative state for each code point on the local interface: • **Enabled**—PFC is enabled for the code point. • **Disabled**—PFC is disabled for the code point.
		Operational Mode	(QFX Series) PFC operational mode for each code point: • Enable—PFC is enabled on the code point. • Disable—PFC is disabled on the code point.
	Peer-Advertisement		Status of advertisements that the peer sends to the local interface.
		Enable	(DCBX Version 1.01 only) State that the peer advertises to the local interface: • **Yes**—The feature is enabled. • **No**—The feature is disabled.
		Willing	Willingness of the peer to learn the PFC configuration from the local interface using DCBX: • **Yes**—The peer is willing to learn the PFC configuration from the local interface. • **No**—The peer is not willing to learn the PFC configuration from the local interface.
		Error	(DCBX Version 1.01 only) Configuration compatibility error status: • **No**—No error detected. Local and peer configuration are compatible. • **Yes**—Error detected. Local and peer configuration are not compatible.

Table 44: show dcbx neighbors Output Fields (continued)

Field Name		Field Description
	Operational State	PFC operational state on the interface: • Enabled—PFC is enabled on the interface • Disabled—PFC is disabled on the interface
	Mac auth Bypass Capability	(IEEE DCBX only) (QFX Series) Media access controller (MAC) authentication bypass provides access to devices based on MAC address authentication. Although the QFX Series does not support this feature, the connected peer might support it. This field reports the peer state: • **Yes**—The connected peer supports MAC authentication bypass. • **No**—The connected peer does not support MAC authentication bypass.
	Maximum Traffic Classes capable to support PFC	Largest number of traffic classes the peer supports for PFC: • **6** (EX Series switches) • **8** (QFX Series)
	Code Point	PFC code point, which is specified in the 3-bit class-of-service field in the VLAN header.
	Admin Mode	PFC administrative state for each code point on the peer: • **Enabled**—PFC is enabled for the code point. • **Disabled**—PFC is disabled for the code point.

Table 44: show dcbx neighbors Output Fields (continued)

Field Name			Field Description
Feature: Application			State information for the DCBX application.
	Protocol-State		(DCBX Version 1.01 only) DCBX protocol state synchronization status: • **in-sync**—The local interface received an acknowledge message from the peer to indicate that the peer received an FCoE state change message sent by the local interface. • **ack-pending**—The local interface has not yet received an acknowledge message from the peer to indicate that the peer received an FCoE state change message sent by the local interface. • **not-applicable**—The local interface is set to **no-auto-negotiation** (autonegotiation is disabled). If the interface is associated with an FCoE forwarding class, the interface advertises FCoE capability even if the connected peer does not advertise FCoE capability.
	Local-Advertisement		Status of advertisements that the local interface sends to the peer. If the local interface is set to **no-auto-negotiation** (autonegotiation is disabled), the local advertisement portion of the output is not shown.
		Enable	(DCBX Version 1.01 only) State that the local interface advertises to the peer: • **Yes**—The feature is enabled. • **No**—The feature is disabled.
		Willing	(DCBX Version 1.01 only) Willingness of the local interface to learn the FCoE interface state from the peer using DCBX: • **Yes**—The local interface is willing to learn the FCoE interface state from the peer. • **No**—The local interface is not willing to learn the FCoE interface state from the peer.
		Error	(DCBX Version 1.01 only) Configuration compatibility error status: • **No**—No error detected. The local and peer configuration are compatible. • **Yes**—Error detected. The local and peer configuration are not compatible.
		Appl-Name	Name of the application:

Table 44: show dcbx neighbors Output Fields (continued)

Field Name		Field Description
	Ethernet-Type	(DCBX Version 1.01 only) Ethernet type (EtherType) of the application. For example, **0x8906** indicates the EtherType for the FCoE application. Either the EtherType (for Layer 2 applications) or the Socket Number (for Layer 4 applications) of the application is displayed in the output.
	Socket-Number	Destination port socket number of the application, if applicable. Either the EtherType (for Layer 2 applications) or the Socket Number (for Layer 4 applications) of the application is displayed in the output.
	Priority-Field or **Priority-Map**	Priority assigned to the application. For EX Series switches, the priority of the FCoE application is determined by the PFC congestion notification profile that has been configured and associated with the FCoE interface. For other applications, the priority is based on the application map.
	Status	(DCBX Version 1.01 only) Local status when autonegotiation is enabled: • **Enabled**—The application feature is enabled on both the local interface and the peer interface. (The local configuration and the peer configuration match.) • **Disabled**—The local configuration and the peer configuration do not match. NOTE: If there is a configuration mismatch in one application between the switch and the peer, all the other applications including FCoE are disabled.
Peer-Advertisement		Status of advertisements that the peer sends to the local interface.
	Enable	(DCBX Version 1.01 only) State that the peer advertises to the local interface: • **Yes**—The feature is enabled. • **No**—The feature is disabled.
	Willing	(DCBX Version 1.01 only) Willingness of the peer to learn the FCoE interface state from the local interface using DCBX: • **Yes**—The peer is willing to learn the FCoE interface state from the local interface. • **No**—The peer is not willing to learn the FCoE interface state from the local interface.

Table 44: show dcbx neighbors Output Fields (continued)

Field Name	Field Description
Error	(DCBX Version 1.01 only) Configuration compatibility error status: • **No**—No error detected. Local and peer configuration are compatible. • **Yes**—Error detected. Local and peer configuration are not compatible.
Appl-Name	Name of the application: • **FCoE**—Fibre Channel over Ethernet
Ethernet-Type	Ethernet type (EtherType) of the application. For example, **0x8906** indicates the EtherType for the FCoE application. Either the EtherType (for Layer 2 applications) or the Socket-Number (for Layer 4 applications) of the application is displayed in the output.
Socket-Number	Destination port socket number of the application, if applicable. Either the EtherType (for Layer 2 applications) or the Socket Number (for Layer 4 applications) of the application is displayed in the output.
Priority-Field or **Priority-Map**	Priority assigned to the application.
Status	(DCBX Version 1.01 only) Peer interface status: • **Enabled**—The application feature is enabled on both the local interface and the peer interface. (The local configuration and the peer configuration match.) • **Disabled**—The local configuration and the peer configuration do not match.

Table 44: show dcbx neighbors Output Fields (continued)

Field Name			Field Description
Feature: ETS			Enhanced Transmission Selection (ETS) DCBX state information.
	Protocol-State		(DCBX Version 1.01 only) ETS protocol state synchronization status: • **in-sync**—The local interface received an acknowledge message from the peer to indicate that the peer received an ETS state change message sent by the local interface. • **ack-pending**—The local interface has not yet received an acknowledge message from the peer to indicate that the peer received an ETS state change message sent by the local interface.
	Operational State		(DCBX Version 1.01 only) Operational state of the feature, **enabled** or **disabled**.
	Local-Advertisement		Status of advertisements that the local interface sends to the peer.
		Enable	(DCBX Version 1.01 only) State that the local interface advertises to the peer: • **Yes**—The feature is enabled. • **No**—The feature is disabled.
		TLV Type	(IEEE DCBX only) Type of ETS TLV: • Configuration—Advertises the Configuration TLV, which communicates the local ETS configuration to the peer but does not ask the peer to use the configuration. • Recommendation—Advertises the Recommendation TLV, which communicates the local ETS configuration to the peer, and if the peer is “willing,” configures the peer interface to match the local ETS configuration. • Recommendation-or-Configuration—Advertises both TLVs.
		Willing	Willingness of the local interface to learn the ETS state from the peer using DCBX (EX Series switches always advertise **No** for this field): • **Yes**—Local interface is willing to learn the ETS state from the peer. • **No**—Local interface is not willing to learn the ETS state from the peer.
		Credit Based Shaper	

Table 44: show dcbx neighbors Output Fields (continued)

Field Name			Field Description
			(IEEE DCBX only) Alternative method of flow control to buffer-to-buffer credit. The QFX Series does not support a credit-based shaper, so the value of this field is always **No**.
		Error	(DCBX Version 1.01 only) Configuration error status: • **No**—No error. This should always be the switch ETS error state. • **Yes**—Error detected.
		Maximum Traffic Classes capable to support PFC	(DCBX Version 1.01 only) Largest number of traffic classes the local interface supports for PFC.
		Maximum Traffic Classes supported	(IEEE DCBX only) Largest number of traffic classes the local interface supports for ETS. (EX Series switches support only one traffic class for ETS. However, a different value might be shown for this field.)
		Code Point	PFC code point, which is specified in the 3-bit class-of-service field in the VLAN header.
		Priority-Group	Class-of-service (CoS) priority group (forwarding class set) identification number.
		Percentage B/W	Configured minimum percentage of link bandwidth allocated to the priority group. Only explicitly configured values appear in this output column. If the link bandwidth is the default percentage, it is not shown. (EX Series switches allocate 100% of link bandwidth to the default priority group, group 7.)
		Transmission Selection Algorithm	(IEEE DCBX only) The transmission selection algorithm used by the interface. The QFX Series supports ETS but does not support using the credit-based shaper algorithm, so the only value shown in this field is **ETS**.
	Peer-Advertisement		Status of advertisements that the peer sends to the local interface.
		Enable	

Table 44: show dcbx neighbors Output Fields (continued)

Field Name	Field Description
	(DCBX Version 1.01 only) State that the peer advertises to the local interface: • **Yes**—The feature is enabled. • **No**—The feature is disabled.
TLV Type	(IEEE DCBX only) Type of ETS TLV: • Configuration—Advertises the Configuration TLV, which communicates the local ETS configuration to the peer but does not ask the peer to use the configuration. • Recommendation—Advertises the Recommendation TLV, which communicates the local ETS configuration to the peer, and if the peer is "willing," configures the peer interface to match the local ETS configuration. • Configuration/Recommendation—Advertises both TLVs.
Willing	Willingness of the peer to learn the ETS state from the local interface using DCBX: • **Yes**—Peer is willing to learn the ETS state from the local interface. • **No**—Peer is not willing to learn the ETS state from the local interface.
Credit Based Shaper	(IEEE DCBX only) Alternative method of flow control to buffer-to-buffer credit. The QFX Series does not support a credit-based shaper, so the value of this field is always **No**.
Error	(DCBX Version 1.01 only) Configuration error status of the peer: • **No**—No error in peer ETS TLV. • **Yes**—Error in peer ETS TLV.
Maximum Traffic Classes capable to support PFC	(DCBX Version 1.01 only) Largest number of traffic classes the local interface supports for PFC.
Maximum Traffic Classes supported	(IEEE DCBX only) Largest number of traffic classes the local interface supports for ETS. (EX Series switches support only one traffic class for ETS. However, a different value might be shown for this field.)
Code Point	

Table 44: show dcbx neighbors Output Fields (continued)

Field Name		Field Description
		PFC code point, which is specified in the 3-bit class-of-service field in the VLAN header.
	Priority-Group	CoS priority group (forwarding class set) identification number.
	Percentage B/W	Configured minimum percentage of link bandwidth allocated to the priority group. (EX Series switches allocate 100% of link bandwidth to the default priority group, group 7.)
	Transmission Selection Algorithm	(IEEE DCBX only) Transmission selection algorithm used by the interface. The QFX Series supports ETS but does not support using the credit-based shaper algorithm, so the only value shown in this field is **ETS**.
PFC		(QFX Series, **terse** option only) DCBX TLV advertisement state for PFC: • Disabled—PFC configuration matches the configuration on the connected peer and PFC is disabled • Enabled—PFC configuration matches the configuration on the connected peer and PFC is enabled • Not Advt—Interface does not advertise PFC to the connected peer
ETS		(**terse** option only) Local DCBX TLV advertisement state for ETS: • Advt—Interface advertises ETS TLVs • Disabled—ETS is disabled on the interface (interface does not advertise ETS)
ETS Rec		(**terse** option only) DCBX TLV peer advertisement state for ETS (state received from the connected DCBX peer): • Advt—Peer interface advertises ETS TLVs • Not Advt—Peer interface does not advertise ETS NOTE: When the DCBX mode is DCBX version 1.01, no peer information is displayed.

Table 44: show dcbx neighbors Output Fields (continued)

Field Name	Field Description
Version	(**terse** option only) The DCBX version used on the interface and whether the DCBX version was autonegotiated or explicitly configured: • **IEEE**—The interface uses IEEE DCBX. • **1.01**—The interface uses DCBX version 1.01. When the DCBX version used is the result of autonegotiation, the term **(Auto)** appears next to the version. For example, **IEEE (Auto)** indicates that the interface autonegotiated with the connected peer to use IEEE DCBX. Autonegotiation is enabled by default.

Sample Output

show dcbx neighbors interface (Junos Fusion Data Center, DCBX Version 1.01 Mode)

```
user@aggregation-device> show dcbx neighbors interface xe-0/0/0
Interface : xe-103/0/10.0 - Parent Interface: ae2.0
    Active-application-map: iscsi-map
    Protocol Mode: DCBX Version 1.01
    Protocol-State: in-sync

    Local-Advertisement:
        Operational version: 0
        sequence-number: 1, acknowledge-id: 6
        satellite sequence-number: 2

    Peer-Advertisement:
        Operational version: 0
        sequence-number: 6, acknowledge-id: 1

    Feature: PFC, Protocol-State: in-sync

      Operational State: Enabled

      Local-Advertisement:
        Enable: Yes, Willing: No, Error: No
        Maximum Traffic Classes capable to support PFC: 8

        Code Point          Admin Mode
          000                 Disabled
          001                 Disabled
          010                 Disabled
          011                 Enabled
          100                 Enabled
          101                 Disabled
          110                 Disabled
          111                 Disabled

      Peer-Advertisement:
        Enable: Yes, Willing: No, Error: No
        Maximum Traffic Classes capable to support PFC: 8

        Code Point          Admin Mode
```

```
      000                 Disabled
      001                 Disabled
      010                 Disabled
      011                 Enabled
      100                 Enabled
      101                 Disabled
      110                 Disabled
      111                 Disabled

Feature: Application, Protocol-State: in-sync

  Local-Advertisement:
    Enable: Yes, Willing: No, Error: No

    Appl-Name    Ethernet-Type    Socket-Number    Priority-Map    Status
      FCoE         0x8906                            00001000       Enabled

      iSCSI                          3260            00010000       Enabled


  Peer-Advertisement:
    Enable: Yes, Willing: No, Error: No

    Appl-Name    Ethernet-Type    Socket-Number    Priority-Map    Status
      FCoE         0x8906                            00001000       Enabled

      iSCSI                          3260            00010000       Enabled


Feature: ETS, Protocol-State: in-sync

  Operational State: Enabled

  Local-Advertisement:
    Enable: Yes, Willing: No, Error: No
    Maximum Traffic Classes supported : 3

    Code Point           Priority-Group
      000                  0
      001                  6
      010                  6
      011                  1
      100                  2
      101                  6
      110                  6
      111                  6

    Priority-Group       Percentage B/W
      0                    35%
      1                    40%
      2                    25%
      6                    0%

  Peer-Advertisement:
    Enable: Yes, Willing: No, Error: No
    Maximum Traffic Classes supported : 3

    Code Point           Priority-Group
      000                  0
      001                  6
      010                  6
```

```
            011                  1
            100                  2
            101                  6
            110                  6
            111                  6

          Priority-Group       Percentage B/W
            0                    35%
            1                    40%
            2                    25%
            6                    0%

Interface : xe-103/0/3.0 - Parent Interface: ae2.0
    Active-application-map: iscsi-map
    Protocol Mode: DCBX Version 1.01
    Protocol-State: in-sync

    Local-Advertisement:
        Operational version: 0
        sequence-number: 1, acknowledge-id: 5
        satellite sequence-number: 2

    Peer-Advertisement:
        Operational version: 0
        sequence-number: 5, acknowledge-id: 1

    Feature: PFC, Protocol-State: in-sync

      Operational State: Enabled

      Local-Advertisement:
        Enable: Yes, Willing: No, Error: No
        Maximum Traffic Classes capable to support PFC: 8

        Code Point          Admin Mode
          000                 Disabled
          001                 Disabled
          010                 Disabled
          011                 Enabled
          100                 Enabled
          101                 Disabled
          110                 Disabled
          111                 Disabled

      Peer-Advertisement:
        Enable: Yes, Willing: No, Error: No
        Maximum Traffic Classes capable to support PFC: 8

        Code Point          Admin Mode
          000                 Disabled
          001                 Disabled
          010                 Disabled
          011                 Enabled
          100                 Enabled
          101                 Disabled
          110                 Disabled
          111                 Disabled

    Feature: Application, Protocol-State: in-sync

      Local-Advertisement:
```

```
    Enable: Yes, Willing: No, Error: No

    Appl-Name    Ethernet-Type    Socket-Number    Priority-Map    Status
      FCoE         0x8906                            00001000       Enabled

      iSCSI                          3260            00010000       Enabled


  Peer-Advertisement:
    Enable: Yes, Willing: No, Error: No

    Appl-Name    Ethernet-Type    Socket-Number    Priority-Map    Status
      FCoE         0x8906                            00001000       Enabled

      iSCSI                          3260            00010000       Enabled


Feature: ETS, Protocol-State: in-sync

  Operational State: Enabled

  Local-Advertisement:
    Enable: Yes, Willing: No, Error: No
    Maximum Traffic Classes supported : 3

    Code Point           Priority-Group
      000                  0
      001                  6
      010                  6
      011                  1
      100                  2
      101                  6
      110                  6
      111                  6

    Priority-Group       Percentage B/W
      0                    35%
      1                    40%
      2                    25%
      6                    0%

  Peer-Advertisement:
    Enable: Yes, Willing: No, Error: No
    Maximum Traffic Classes supported : 3

    Code Point           Priority-Group
      000                  0
      001                  6
      010                  6
      011                  1
      100                  2
      101                  6
      110                  6
      111                  6

    Priority-Group       Percentage B/W
      0                    35%
      1                    40%
      2                    25%
      6                    0%
```

show dcbx neighbors interface (QFX Series, DCBX Version 1.01 Mode)

```
user@switch> show dcbx neighbors interface xe-0/0/0
Interface : xe-0/0/0.0 - Parent Interface: ae0.0
    Active-application-map: app-map-1
    Protocol-State: in-sync
    Protocol-Mode: DCBX Version 1.01

    Local-Advertisement:
        Operational version: 1
        sequence-number: 130, acknowledge-id: 102

    Peer-Advertisement:
        Operational version: 1
        sequence-number: 102, acknowledge-id: 130

    Feature: PFC, Protocol-State: in-sync

      Operational State: Enabled

      Local-Advertisement:
        Enable: Yes, Willing: No, Error: No
        Maximum Traffic Classes capable to support PFC: 8

        Code Point           Admin Mode   Operational Mode
          000                 Disabled    Disable
          001                 Disabled    Disable
          010                 Disabled    Disable
          011                 Enabled     Enable
          100                 Enabled     Enable
          101                 Disabled    Disable
          110                 Disabled    Disable
          111                 Disabled    Disable

      Peer-Advertisement:
        Enable: Yes, Willing: No, Error: No
        Maximum Traffic Classes capable to support PFC: 8

        Code Point           Admin Mode
          000                 Disabled
          001                 Disabled
          010                 Disabled
          011                 Enabled
          100                 Enabled
          101                 Disabled
          110                 Disabled
          111                 Disabled

    Feature: Application, Protocol-State: in-sync

      Local-Advertisement:
        Enable: Yes, Willing: No, Error: No

        Appl-Name    Ethernet-Type    Socket-Number    Priority-Map    Status
          FCoE         0x8906                            00001110        Enabled

          iSCSI                            3260          10000000        Enabled


      Peer-Advertisement:
```

```
    Enable: Yes, Willing: Yes, Error: No

    Appl-Name    Ethernet-Type    Socket-Number    Priority-Map    Status

      FCoE         0x8906             N/A            00001110        Enabled


  Feature: ETS, Protocol-State: in-sync

    Operational State: Enabled

    Local-Advertisement:
      Enable: Yes, Willing: No, Error: No
      Maximum Traffic Classes capable to support PFC: 8

      Code Point           Priority-Group
        000                  0
        001                  7
        010                  7
        011                  7
        100                  0
        101                  1
        110                  1
        111                  7

      Priority-Group       Percentage B/W
        0                    40%
        1                    5%

    Peer-Advertisement:
      Enable: Yes, Willing: No, Error: No
      Maximum Traffic Classes capable to support PFC: 8

      Code Point           Priority-Group
        000                  0
        001                  7
        010                  7
        011                  7
        100                  0
        101                  1
        110                  1
        111                  7

      Priority-Group       Percentage B/W
        0                    40%
        1                    5%
```

show dcbx neighbors interface (QFX Series, IEEE DCBX Mode)

```
user@switch> show dcbx neighbors interface xe-0/0/0
Interface : xe-0/0/0.0 - Parent Interface: ae0.0
    Active-application-map: app-map-1
    Protocol-Mode: IEEE-DCBX Version

    Feature: PFC

      Local-Advertisement:
        Willing: No
        Mac auth Bypass Capability: No
```

```
    Operational State: Enabled

    Maximum Traffic Classes capable to support PFC: 8

    Code Point           Admin Mode
      000                 Disabled
      001                 Disabled
      010                 Disabled
      011                 Enabled
      100                 Enabled
      101                 Disabled
      110                 Disabled
      111                 Disabled

  Peer-Advertisement:
    Willing: No
    Mac auth Bypass Capability: No
    Operational State: Enabled

    Maximum Traffic Classes capable to support PFC: 8

    Code Point          Admin Mode
      000                 Disabled
      001                 Disabled
      010                 Disabled
      011                 Enabled
      100                 Enabled
      101                 Disabled
      110                 Disabled
      111                 Disabled

Feature: Application

  Local-Advertisement:

    Appl-Name    Ethernet-Type    Socket-Number    Priority-field
      FCoE         0x8906                            00001110
      iSCSI                             3260         10000000

  Peer-Advertisement:
    Appl-Name    Ethernet-Type    Socket-Number    Priority-field
      FCoE         0x8906             N/A            00001110

Feature: ETS

  Local-Advertisement:
    TLV Type: Configuration/Recommendation
    Willing: No
    Credit Based Shaper: No
    Maximum Traffic Classes supported: 3

    Code Point           Priority-Group
      000                  0
      001                  7
      010                  7
      011                  7
      100                  0
      101                  1
      110                  1
      111                  7
```

```
    Priority-Group       Percentage B/W
      0                    40%
      1                    5%

    Priority-Group   Transmission Selection Algorithm
      0              Enhanced Transmission Selection
      1              Enhanced Transmission Selection

  Peer-Advertisement:
    TLV Type: Configuration
    Willing: No
    Credit Based Shaper: No

    Code Point           Priority-Group
      000                  0
      001                  7
      010                  7
      011                  7
      100                  0
      101                  1
      110                  1
      111                  7

    Priority-Group       Percentage B/W
      0                    40%
      1                    5%

    Priority-Group   Transmission Selection Algorithm
      0              Enhanced Transmission Selection
      1              Enhanced Transmission Selection

  Peer-Advertisement:

    TLV Type: Recommendation

    Code Point           Priority-Group
      000                  0
      001                  7
      010                  7
      011                  7
      100                  0
      101                  1
      110                  1
      111                  7

    Priority-Group       Percentage B/W
      0                    40%
      1                    5%

    Priority-Group   Transmission Selection Algorithm
      0              Enhanced Transmission Selection
      1              Enhanced Transmission Selection
```

show dcbx neighbors terse (QFX Series)

```
user@switch> show dcbx neighbors terse
Interface   Parent      PFC        ETS        ETS        Version
            Interface                                    Rec
xe-0/0/8.0  -           Enabled    Advt       Advt       IEEE (Auto)
xe-0/0/9.0  -           Disabled   Disabled              1.01
```

```
xe-0/0/11.0 ae0.0       Enabled    Advt       Advt       IEEE (Auto)
xe-0/0/12.0 ae0.0       Enabled    Advt       Advt       IEEE (Auto)
xe-0/0/32.0 -           Enabled    Advt       Not Advt   IEEE
xe-0/0/36.0 -           Not Advt   Advt       Advt       IEEE
```

show dcbx neighbors (EX4500 Switch: FCoE Interfaces on Both Local and Peer with PFC Configured Compatibly)

```
user@switch> show dcbx neighbors interface xe-0/0/14

   Interface : xe-0/0/14.0 - Parent Interface: ae0.0
    Protocol-State: in-sync

    Local-Advertisement:
        Operational version: 0
        sequence-number: 6, acknowledge-id: 6

    Peer-Advertisement:
        Operational version: 0
        sequence-number: 6, acknowledge-id: 6

    Feature: PFC, Protocol-State: in-sync

      Operational State: Enabled

      Local-Advertisement:
        Enable: Yes, Willing: No, Error: No
        Maximum Traffic Classes capable to support PFC: 6

         Code Point            Admin Mode
          000                 Disabled
          001                 Disabled
          010                 Disabled
          011                 Enabled
          100                 Disabled
          101                 Disabled
          110                 Disabled
          111                 Disabled



      Peer-Advertisement:
        Enable: Yes, Willing: No, Error: No
        Maximum Traffic Classes capable to support PFC: 6

        Code Point            Admin Mode
          000                 Disabled
          001                 Disabled
          010                 Disabled
          011                 Enabled
          100                 Disabled
          101                 Disabled
          110                 Disabled
          111                 Disabled



    Feature: Application, Protocol-State: in-sync

      Local-Advertisement:
```

```
        Enable: Yes, Willing: No, Error: No   <<< Error bit will not be set as
there is no miss configuration between local and peer.


        Appl-Name    Ethernet-Type    Socket-Number    Priority-Map    Status
        FCoE          0x8906                            00001000        Enabled


      Peer-Advertisement:
        Enable: Yes, Willing: No, Error: No

                 Appl-Name    Ethernet-Type    Socket-Number    Priority-Map
Status
                 FCoE          0x8906                            00001000
Enabled
```

show dcbx neighbors (EX4500 Switch: DCBX Interfaces on Local and Peer Are Configured Compatibly with iSCSI Application)

```
user@switch> show dcbx neighbors interface xe-0/0/14

  Interface : xe-0/0/14.0 - Parent Interface: ae0.0

    Protocol-State: in-sync

    Active-application-map: iscsi-map

     Local-Advertisement:
        Operational version: 0
        sequence-number: 9, acknowledge-id: 12


    Peer-Advertisement:
        Operational version: 0
        sequence-number: 12, acknowledge-id: 9


    Feature: PFC, Protocol-State: in-sync
      Operational State: Enabled
       Local-Advertisement:
        Enable: Yes, Willing: No, Error: No
        Maximum Traffic Classes capable to support PFC: 6


     Code Point              Admin Mode
          000                 Disabled
          001                 Disabled
          010                 Disabled
          011                 Enabled
          100                 Disabled
          101                 Disabled
          110                 Disabled
          111                 Disabled

      Peer-Advertisement:
        Enable: Yes, Willing: No, Error: No
        Maximum Traffic Classes capable to support PFC: 6

     Code Point              Admin Mode
```

```
        000                 Disabled
        001                 Disabled
        010                 Disabled
        011                 Enabled
        100                 Disabled
        101                 Disabled
        110                 Disabled
        111                 Disabled

    Feature: Application, Protocol-State: in-sync
     Local-Advertisement:
       Enable: Yes, Willing: No, Error: No

           Appl-Name    Ethernet-Type    Socket-Number   Priority-Map    Status

            FCoE         0x8906                          00001000        Enabled

            iscsi                         3260           00100000        Enabled


     Peer-Advertisement:
       Enable: Yes, Willing: No, Error: No

           Appl-Name    Ethernet-Type    Socket-Number   Priority-Map    Status

            FCoE         0x8906                          00001000        Enabled

            iscsi                         3260           00100000        Enabled
```

show dcbx neighbors (EX4500 Switch: Includes ETS)

```
user@switch> show dcbx neighbors interface xe-0/0/3

   Interface : xe-0/0/3.0
    Protocol-State: in-sync
    Active-application-map: map_iscsi

    Local-Advertisement:
        Operational version: 0
        sequence-number: 1, acknowledge-id: 5

    Peer-Advertisement:
        Operational version: 0
        sequence-number: 5, acknowledge-id: 1

    Feature: PFC, Protocol-State: in-sync

      Operational State: Enabled

      Local-Advertisement:
        Enable: Yes, Willing: No, Error: No
        Maximum Traffic Classes capable to support PFC: 6

        Code Point          Admin Mode
          000                 Enabled
          001                 Enabled
          010                 Disabled
          011                 Disabled
          100                 Disabled
```

```
      101                 Disabled
      110                 Disabled
      111                 Disabled

  Peer-Advertisement:
    Enable: Yes, Willing: Yes, Error: No
    Maximum Traffic Classes capable to support PFC: 8

    Code Point          Admin Mode
      000                 Enabled
      001                 Disabled
      010                 Disabled
      011                 Disabled
      100                 Enabled
      101                 Disabled
      110                 Disabled
      111                 Disabled

Feature: Application, Protocol-State: in-sync

  Local-Advertisement:
    Enable: Yes, Willing: No, Error: No

    Appl-Name    Ethernet-Type    Socket-Number    Priority-Map    Status
      FCoE         0x8906                            00000001       Enabled

      iscsi                          3260            00000010       Enabled


  Peer-Advertisement:
    Enable: Yes, Willing: Yes, Error: No

    Appl-Name    Ethernet-Type    Socket-Number    Priority-Map    Status
      FCoE         0x8906                            00001000       Enabled

      iscsi                          3260            00010000       Enabled


Feature: ETS, Protocol-State: in-sync

  Operational State: Enabled

  Local-Advertisement:
    Enable: Yes, Willing: No, Error: No
    Maximum Traffic Classes supported : 3

    Code Point           Priority-Group
      000                  7
      001                  7
      010                  7
      011                  7
      100                  7
      101                  7
      110                  7
      111                  7

    Priority-Group       Percentage B/W
      7                    100%

  Peer-Advertisement:
    Enable: Yes, Willing: Yes, Error: No
```

```
Maximum Traffic Classes supported : 8

Code Point           Priority-Group
  000                  0
  001                  1
  010                  0
  011                  0
  100                  2
  101                  0
  110                  0
  111                  0

Priority-Group       Percentage B/W
  0                    30%
  1                    40%
  2                    30%
```

CHAPTER 16

Local Switching on Junos Fusion Data Center

Configuring Local Switching on Junos Fusion Data Center

NOTE: **Local switching is not supported on Junos Fusion Data Center with EVPN.**

In a Junos Fusion topology, Layer 2 traffic that ingresses on the extended ports of a satellite device is forwarded to the aggregation device by default, even if the destination is reachable from the same satellite device. The satellite device does not perform any processing on the incoming traffic. Because the traffic utilizes bandwidth on the uplink interfaces, this can lead to higher packet latency or packet drop when the uplink interface bandwidth is over-utilized.

You can configure the satellite device on Junos Fusion Data Center to perform switching of Layer 2 unicast traffic if the destination MAC address is on the same satellite device. This helps reduce usage of the uplink interfaces and improves switching latency.

With local switching enabled, all Layer 2 unicast traffic for which the source and destination port are local to a given satellite device is forwarded by the satellite device itself based on the destination MAC address. The satellite device maintains a bridge forwarding table with the local MAC addresses for devices that are connected directly to the satellite device and forwards the data packets with local MAC addresses. Packets with unknown MAC addresses are sent to the aggregate device.

Figure 13 on page 934 shows a Junos Fusion topology operating in extended mode, with two satellite devices connected to one aggregation device. Host 2 and Host 4 are connected to the same satellite device. When Host 2 sends a unicast packet to Host 4, the packet is forwarded to the aggregation device, which switches the packet to its destination.

Figure 13: Layer 2 Unicast Data Packet Flow Through a Junos Fusion Topology—Extended Mode

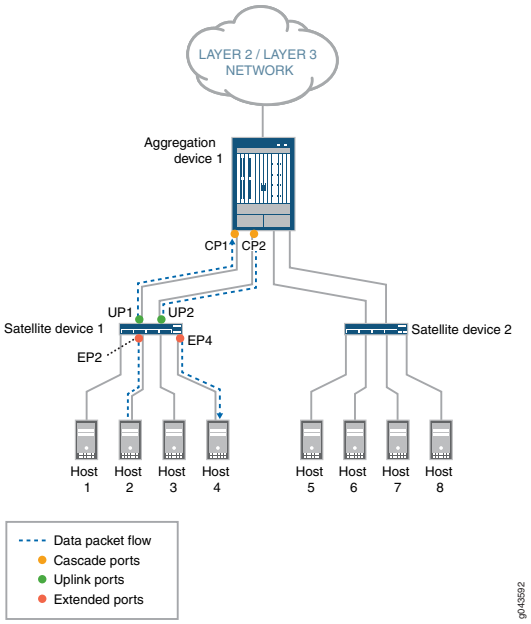

In Figure 14 on page 934, local switching is enabled on Satellite device 1. When Host 2 sends a unicast packet to Host 4, the packet is switched by the satellite device, and does not traverse the uplink ports.

Figure 14: Layer 2 Unicast Data Packet Flow Through a Junos Fusion Topology—Local Switching enabled

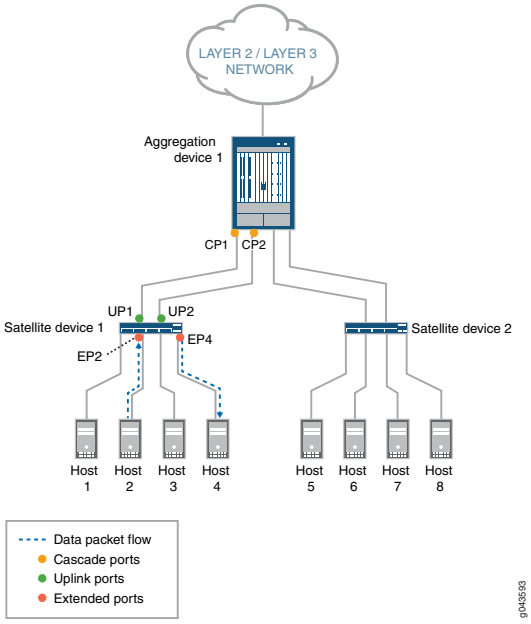

Local switching is enabled at the satellite device level. When you enable local switching on a satellite device, all VLANs on that satellite device are subject to local switching. Local switching supports only a single switching instance per satellite device and only untagged or single VLAN-tagged packets. Dual-tagged (Q-in-Q) packets are not supported.

The following features are not supported with local switching:

- VLAN translation
- Logical interfaces configured that are not configured with **family ethernet-switching**

NOTE: **Local switching is not supported in a Junos Fusion Data Center with EVPN.**

To enable local switching on a satellite device, issue the following command:

`user@aggregation-device>` **set forwarding-options satellite fpc *slot-id* local-switching**

Related Documentation

- Understanding the Flow of Data Packets in a Junos Fusion Topology on page 37

local-switching

Syntax local-switching

Hierarchy Level [edit forwarding-options satellite fpc *slot-id*]

Release Information Statement introduced in Junos OS Release 17.2R1 for Junos Fusion Data Center.

Description Configure the satellite device on Junos Fusion Data Center to perform switching of Layer 2 traffic if the destination MAC address is on the same satellite device. This helps reduce usage of the uplink interfaces and improves switching latency.

In local switching mode, all Layer 2 traffic for which the source and destination port are local to a given satellite device is forwarded by the satellite device itself based on the destination MAC address. Each satellite device maintains only the local destination MAC addresses for directly connected devices in the bridge forwarding table. If the destination MAC address is unknown on the satellite device, the packet is sent to the aggregation device for forwarding.

Local switching can be selectively enabled at the satellite device level. When you enable local switching on a satellite device, all VLANs on that satellite device are subject to local switching.

NOTE: **Local switching is not supported in a Junos Fusion Data Center with EVPN.**

Default By default, Layer 2 unicast traffic that ingresses on the extended ports of a satellite device is always forwarded to the aggregation device, even if the destination is reachable from the same satellite device.

Required Privilege Level routing—To view this statement in the configuration.
routing-control—To add this statement to the configuration.

Related Documentation

- Configuring Local Switching on Junos Fusion Data Center on page 933

CHAPTER 17

Loop Detection and Prevention on Junos Fusion Data Center

Understanding Loop Detection and Prevention on a Junos Fusion

Ethernet networks are susceptible to broadcast storms if loops are introduced. However, an Ethernet network needs to include loops because they provide redundant paths in case of a link failure. You can configure a Junos Fusion to detect and prevent undesirable loops while still maintaining link redundancy.

Spanning Tree Protocols in a Junos Fusion

Junos Fusion provides Layer 2 loop prevention through Rapid Spanning Tree Protocol (RSTP) and VLAN Spanning Tree Protocol (VSTP). Spanning-tree protocols intelligently avoid loops in a network by identifying certain links as point to point links and blocking other possible paths. When one of the point-to-point links fails, a designated alternate link transitions from the blocked state to the forwarding state and takes over.

RSTP and VSTP can be configured on up to 1100 extended ports in Junos Fusion. Spanning-tree protocols in a Junos Fusion presents scaling limitations due to the processing resources required for the aggregation device to manage the transitions from the default blocking state to the forwarding state for STP-enabled ports.

RSTP and VSTP configuration in a Junos Fusion is identical for a standalone switch. For configuration details, see *Configuring VSTP* and *Configuring RSTP*. For a complete overview

of spanning-tree protocols, see *Understanding Spanning Tree Protocol Used for Eliminating Bridge Loops in Ethernet LANs*.

NOTE: **Full support for RSTP and VSTP is provided only for single-homed satellite devices in a Junos Fusion.**

BPDU Protection in a Junos Fusion Data Center

Spanning-tree protocols support a loop-free network through the exchange of bridge protocol data units (BPDUs). A BPDU frame is a message sent from one switch to another to communicate information about itself, such as its bridge ID, root path costs, and port MAC addresses. The exchange of BPDUs prevents loops in network traffic by determining which interfaces block traffic and which interfaces forward traffic.

Other devices--PC bridging applications, for example--also use BPDUs and generate their own BPDUs that are not compatible with those used by spanning-tree protocols. Receipt of outside BPDUs in a spanning-tree topology can lead to network outages by triggering an STP misconfiguration. To prevent such outages, you can configure BPDU protection on extended ports in a Junos Fusion. If an outside BPDU is received on a BPDU-protected interface, the interface shuts down to prevent the outside BPDU from accessing the STP interface.

BPDU protection is supported for single-homed and dual-homed satellite devices in a Junos Fusion, and can be configured on up to 10000 extended ports. You can configure BPDU protection for both RSTP and VSTP. For configuration details, see *Configuring BPDU Protection on All Edge Ports*.

Loop Detection in a Junos Fusion

You can configure loop detection in a Junos Fusion to address the scaling limitations of spanning-tree protocols. Loop detection is a lightweight Layer 2 protocol that can be enabled on all extended ports in a Junos Fusion. When loop detection is enabled on an extended port, the port periodically transmits a Layer 2 multicast packet with a user-defined MAC address. If the packet is received on an extended port interface in the Junos Fusion topology, the ingress interface is logically shut down and a loop detect error is flagged. If a loop is created between two extended ports, both interfaces receive the packets transmitted from the other interface, and both ports are shut down. Manual intervention is required to bring the interfaces back online.

Loop detection is useful for detecting accidental loops caused by faulty wiring or by VLAN configuration errors. Loop detection also supports servers that run spanning-tree protocols and transmit BPDUs. An interface configured with BPDU protection is disabled if it receives a BPDU from the server. Because loop detection uses a proprietary PDU instead of BPDUs, an interface configured with loop detection instead of BPDU protection remains operational on receipt of a BPDU.

Loop detection is supported for single-homed and dual-homed satellite devices in a Junos Fusion. See "Configuring Loop Detection in a Junos Fusion" on page 939.

Related Documentation

- *Understanding Spanning Tree Protocol Used for Eliminating Bridge Loops in Ethernet LANs*
- Configuring Loop Detection in a Junos Fusion on page 939

Configuring Loop Detection in a Junos Fusion

You can configure loop detection in a Junos Fusion to detect accidental loops caused by faulty wiring or by VLAN configuration errors. When loop detection is enabled on an extended port, the port periodically transmits a Layer 2 multicast packet with a user-defined MAC address. If the loop detection packet is received on an extended port interface in the Junos Fusion topology, the ingress interface is logically shut down and a loop detect error is flagged. Manual intervention is required to bring the interface back online.

Loop detection can be configured on extended port interfaces in a Junos Fusion, either on a per-interface basis or for all interfaces. You can configure the interval of time in seconds at which the loop detection packets are transmitted from the extended ports. The default interval is 30 seconds.

To configure loop detection in a Junos Fusion:

1. Configure loop detection for a specific interface or for all interfaces:
   - To configure a specific interface:

     ```
     [edit]
     user@aggregation-device# set protocols loop-detect interface interface-name
     ```

   - To configure all interfaces:

     ```
     [edit]
     user@aggregation-device# set protocols loop-detect interface all-extended-ports
     ```

2. Specify the MAC address to use in the loop detection packet:

   ```
   [edit]
   user@aggregation-device# set protocols loop-detect destination-mac mac-address
   ```

3. (Optional) Configure the interval at which the extended ports transmit a loop detection packet:

   ```
   [edit]
   user@aggregation-device# set protocols loop-detect transmit-interval seconds
   ```

To bring up an interface after it has been disabled by a loop detect error, issue the following command:

- `[edit]`
  `user@aggregation-device>` **clear error loop-detect interface** ***interface-name***

Related Documentation

- Understanding Loop Detection and Prevention on a Junos Fusion on page 937

loop-detect

Syntax

```
loop-detect {
   destination-mac mac-address;
   interface (interface-name | all-extended-ports) {
      disable disable;
   }
   transmit-interval seconds;
}
```

Hierarchy Level

[edit logical-systems *name* protocols],
[edit protocols]

Release Information

Statement introduced in Junos OS Release 17.1R1 for Junos Fusion.

Description

Configure loop detection in a Junos Fusion to detect accidental loops that be caused by faulty wiring or by VLAN configuration errors. When loop detection is enabled on an extended port, the port periodically transmits a Layer 2 multicast packet with a user-defined MAC address. If the loop detection packet is received on an extended port interface in the Junos Fusion topology, the interface is logically shut down and a loop detect error is flagged. If a loop is created between two extended ports, both interfaces receive the packets transmitted from the other interface, and both ports are shut down. Manual intervention is required to bring the interfaces back online.

Loop detection can be configured on extended port interfaces in a Junos Fusion, either on a per-interface basis or for all interfaces. You can configure the interval of time in seconds at which the loop detection packets are transmitted from the extended ports. The default interval is 30 seconds.

Default

Loop detection is disabled by default.

Options

destination-mac *mac-address*—Configure the destination MAC address to be included in the loop detection PDUs.

transmit-interval *seconds*—Configure the time interval in seconds at which loop detection PDUs are transmitted from the extended ports.

Range: 5 through 3600

Default: 30

The remaining statements are described separately.

Required Privilege Level

routing—To view this statement in the configuration.
routing-control—To add this statement to the configuration.

Related Documentation

- Configuring Loop Detection in a Junos Fusion on page 939

interface (Loop Detection)

Syntax

```
interface {
   all-extended-ports;
   interface-name {
      disable disable;
   }
}
```

Hierarchy Level

[edit logical-systems *name* protocols loop-detect],
[edit protocols loop-detect]

Release Information

Statement introduced in Junos OS Release 17.1R1 for Junos Fusion.

Description

Specify the extended port interface for configuring loop detection in a Junos Fusion. You can configure loop detection to find accidental loops in a Junos Fusion topology that might be caused by faulty wiring or by VLAN configuration errors. When loop detection is enabled on an extended port, the port periodically transmits a Layer 2 multicast packet with a user-defined MAC address. If the loop detection packet is received on an extended port interface in the Junos Fusion topology, the interface is logically shut down and a loop detect error is flagged. If a loop is created between two extended ports, both interfaces receive the packets transmitted from the other interface, and both ports are shut down. Manual intervention is required to bring the interfaces back online.

Loop detection can be configured on extended port interfaces in a Junos Fusion, either on a per-interface basis or for all interfaces. You can configure loop detection on an extended port interface in either access or trunk mode.

Default

Loop detection is disabled by default.

Options

interface-name—Configure loop detection on the specified interface.

disable—Configure the disable option to selectively disable the loop detection on individual interfaces.

all-extended-ports—Configure loop detection on all extended port interfaces.

Required Privilege Level

routing—To view this statement in the configuration.
routing-control—To add this statement to the configuration.

Related Documentation

- Configuring Loop Detection in a Junos Fusion on page 939

clear error loop-detect interface

Syntax

clear error loop-detect interface
<interface *interface-name*>

Release Information

Command introduced in JUNOS Release 17.1 for Junos Fusion.

Description

Clear loop detection errors from all the extended port interfaces in a Junos Fusion or from the specified interface, and restore all interfaces or the specified interface to service. When loop detection is enabled on an extended port, the port periodically transmits a Layer 2 multicast packet with a user-defined MAC address. If the loop detection packet is received on an extended port interface in the Junos Fusion topology, the ingress interface is logically shut down and a loop detect error is flagged. Manual intervention is required to bring the interface back online.

Options

none—Clear loop detection errors from all the extended port interfaces in a Junos Fusion and restore these interfaces to service.

interface-name—(Optional) Clear loop detection errors from the specified interface and restore the interface to service.

Required Privilege Level

clear

Related Documentation

- Configuring Loop Detection in a Junos Fusion on page 939
- loop-detect on page 941
- interface on page 942

List of Sample Output

clear error loop-detect interface on page 943

Output Fields

This command produces no output.

Sample Output

clear error loop-detect interface

```
user@aggregation-device> clear error loop-detect interface
```

show loop-detect interface

Syntax

show loop-detect interface
<interface-name>

Release Information

Command introduced in Junos OS Release 17.1 for Junos Fusion.

Description

Display the state of extended port interfaces on which the loop detection feature is enabled in a Junos Fusion. When loop detection is enabled on an extended port, the port periodically transmits a Layer 2 multicast packet with a user-defined MAC address. If the loop detection packet is received on an extended port interface in the Junos Fusion topology, the ingress interface is logically shut down and a loop detect error is flagged. Manual intervention is required to bring the interface back online.

Options

interface-name—(Optional) Display the state of the specified interface enabled with loop detection.

Required Privilege Level

view

Related Documentation

- Configuring Loop Detection in a Junos Fusion on page 939
- show loop-detect statistics interface on page 946
- clear error loop-detect interface on page 943

List of Sample Output

show loop-detect interface on page 945
show loop-detect interface on page 945

Output Fields

Table 45 on page 944 lists the output fields for the **show loop-detect interface** command. Output fields are listed in the approximate order in which they appear.

Table 45: show loop-detect interface Output Fields

Field Name	Field Description	Level of Output
Interface	Interface on which loop detection has been enabled.	All levels
Parent interface	Name of the aggregated interface for AE member interfaces.	All levels
State	State of the interface. • **UP**—The interface is operational. • **DOWN**—The interface has been logically shut down as a result of a loop detect error.	All levels

Sample Output

show loop-detect interface

```
user@aggregation-device> show loop-detect interface
Interface    Parent-Interface    State

xe-123/0/38       ae2           DOWN
xe-123/0/41       ae2            UP
xe-123/0/42        -             UP
xe-123/0/50:1     ae0            UP
xe-123/0/50:2     ae0            UP
xe-123/0/51:1     ae1            UP
xe-123/0/51:2     ae1            UP
xe-124/2/2         -            DOWN
```

Sample Output

show loop-detect interface

```
user@aggregation-device> show loop-detect interface xe-151/0/44
Interface    Parent-Interface    State

xe-123/0/42        -              UP
```

show loop-detect statistics interface

Syntax show loop-detect statistics interface
<interface-name>

Release Information Command introduced in Junos OS Release 17.1 for Junos Fusion.

Description Display loop detection statistics on extended port interfaces in a Junos Fusion. When loop detection is enabled on an extended port, the port periodically transmits a Layer 2 multicast packet with a user-defined MAC address. If the loop detection packet is received on an extended port interface in the Junos Fusion topology, the ingress interface is logically shut down and a loop detect error is flagged. Manual intervention is required to bring the interface back online.

Options ***interface-name***—(Optional) Display loop detection statistics for the specified interface.

Required Privilege Level view

Related Documentation

- Configuring Loop Detection in a Junos Fusion on page 939
- show loop-detect interface on page 944
- clear error loop-detect interface on page 943

List of Sample Output show loop-detect statistics interface on page 946
show loop-detect statistics interface on page 947

Output Fields Table 45 on page 944 lists the output fields for the **show loop-detect statistics interface** command. Output fields are listed in the approximate order in which they appear.

Table 46: show loop-detect statistics interface Output Fields

Field Name	Field Description	Level of Output
Interface	Interface on which loop detection has been applied.	All levels
Packets sent	Total number of loop detection packets that have been transmitted from the interface.	All levels
Packets received	Total number of loop detection packets that have been received on the interface.	All levels

Sample Output

show loop-detect statistics interface

```
user@aggregation-device> show loop-detect statistics interface
```



```
Interface     Packets sent   Packets received
xe-151/0/44       7                   0
xe-151/0/45      10                   0
xe-151/0/46      12                   0
```

Sample Output

show loop-detect statistics interface

```
user@aggregation-device> show loop-detect statistics interface xe-151/0/44
Interface     Packets sent   Packets received
xe-151/0/44       7                   0
```

CHAPTER 18

Multicast Forwarding on Junos Fusion Data Center

Multicast Forwarding at Layer 3 in a Junos Fusion Data Center with EVPN

The Junos Fusion Data Center with EVPN topology referenced in this topic is shown in Figure 15 on page 951. In this architecture, the core devices are referred to as aggregation devices, and the access devices are referred to as satellite devices. These satellite devices appear to the aggregation devices as logical line cards by virtue of the IEEE 802.1BR protocol and proprietary extensions. Ports on the satellite device are referred to as extended ports, and the upstream aggregation interfaces on the satellite devices that connect to the aggregation devices are called cascade ports.

Figure 15: Junos Fusion Data Center with EVPN Network Topology

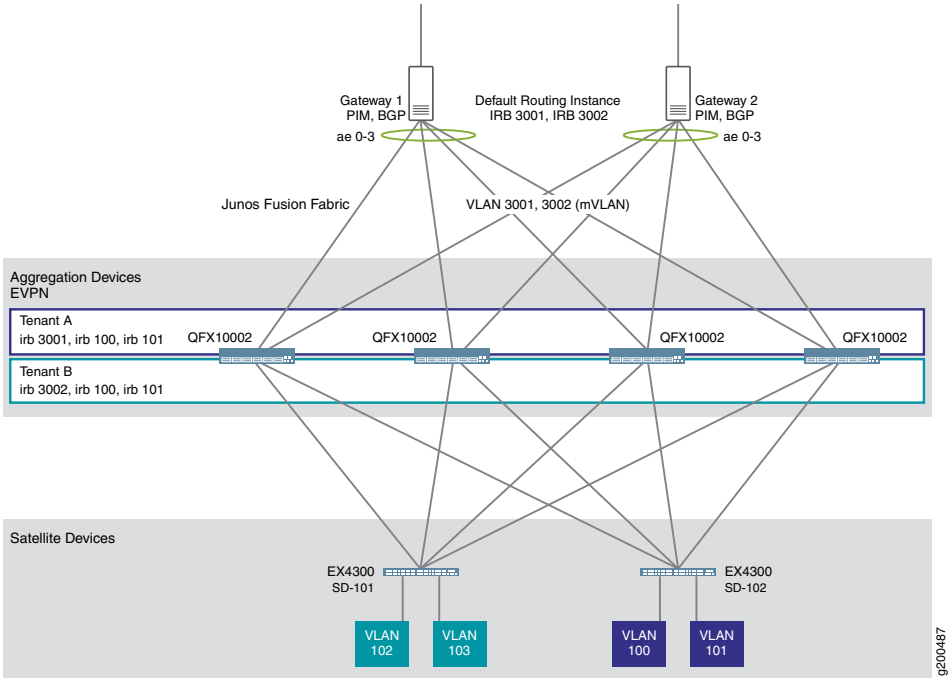

IGMPv3 runs between the aggregation devices and the gateways. When a multicast receiver that is connected to an extended port on the fabric sends an IGMP join, the fabric as a whole (that is, all four aggregation devices) initiates an IGMP join towards the gateways, which accepts the joins. The gateways send the multicast traffic they receive to the aggregation devices, which in turn sends it to the particular receiver.

Junos Fusion Data Center with EVPN leverages the EVPN BGP control plane to signal the EVPN topology, as well as to distribute MAC address reachability and other states between the aggregation devices. It is in this context that Junos Fusion Data Center with EVPN is able to support PIM-less multicast within the fabric for users who do not want to run PIM on their network between aggregation devices, or between the aggregation devices and the gateways. Instead of PIM, Junos Fusion Data Center with EVPN uses a simplified IGMP control plane, so IGMP joins go from the fabric to the connected gateways. In addition, the number of IGMP joins from the fabric to the multicast gateway is reduced through the use of multicast VLANs (mVLAN) between the aggregation devices and the gateways instead of IGMP snooping.

Besides keeping the complexities of PIM out of the fabric, the benefit of using the IGMP control plane for multicast is that it is highly scalable, supports multi-tenancy, and provides operational simplicity.

For example, to enable multicast flows (Layer 2 and Layer 3) in Junos Fusion Data Center with EVPN, you need only configure **passive-pim** on the aggregation devices (so they do not form PIM neighborships), and **pim-to-igmp-proxy** (so that when an aggregation device receives a IGMP join request from a server, it can create a PIM state that triggers an IGMP join towards the gateways).

On the multicast gateway devices, you can configure **accept-remote-source** if you need to support multicast traffic originating from a source outside the fabric so the traffic can ingress to the gateways. The gateways form a PIM neighborship, and one becomes the DR (designated router), which sends source traffic to the core fabric.

Junos Fusion Data Center with EVPN supports layer 3 multicast within the fabric, which means you can have servers connected on extended ports that are in different tenants. In some cases, one may be a source and the other a receiver. Routing between the tenants in such a case is handled by the gateways; the source sends traffic to the aggregation devices, which in turn send it to the multicast gateway via the mVLAN for that tenant. You can see this in Figure 15 on page 951. The gateways handle routing between tenants by sending it back through the fabric and on to the receiver VLAN. For example, the multicast gateway can see multicast traffic on IRB 3001, even though source of the multicast stream may actually belong to VLAN 100.

Additional key points are listed here:

- Two or more satellite devices are multihomed to four fully meshed aggregation devices.
- The aggregation devices can be QFX10002, QFX10008, or QFX10016 switches running Junos 18.1R2S1 or later.
- PIM is running over an EVPN VLAN between the multicast gateway devices.
- Between the aggregation devices and the gateways is a dedicated mVLAN.
- BGP is running between the mVLAN IRBs on the PIM gateways, and the gateways and the aggregation devices.

The aggregation devices are configured for the following:

- PIM passive mode.
- IGMP Snooping.
- Implicit IGMP querier running on IRB of the revenue VLANs.

The multicast gateway servers are configured for the following:

- PIM, configured to **accept-remote-source**.
- BGP running between each aggregation device and the multicast gateway pair.
- Implicit IGMP querier on the mVLAN IRB.
- Per tenant mVLAN on L2 ESI/lag between the PIM gateways and aggregation devices.

The satellite devices are configured for the following:

- Local-replication is enabled (this will support optimized L2 multicast, which means only one copy of a multicast stream needs to be sent to a given satellite device, even if that satellite device has multiple extended-port receivers).
- All extended ports on the satellite-devices are running in Active/Active mode.

In addition to the base Junos Fusion Data Center with EVPN configuration, the setup referenced in Figure 15 on page 951 includes some additional configurations such as are shown in the samples below.

Multicast on the aggregation devices

```
protocols {
    evpn {
        multicast-mode ingress-replication;
    }
}

forwarding-options {
    multicast-replication {
        evpn {
           irb local-only;
        }
    }
}
```

Multicast on the gateways

```
protocols {
        pim {
            rp {
                local {
                    address <address>;
                }
            }
        }
        interface irb.3001 {
                accept-remote-source;
        }
        interface irb.3002 {
                accept-remote-source;
        }
    }
```

Egress replication

By default, egress multicast replication (also called local replication) is disabled, and Junos Fusion uses ingress replication. When you enable local replication, egress multicast replication is activated for all satellite devices that are connected to the aggregation device.

```
forwarding-options {
```

```
        satellite {
            local-replication;
        }
    }
    routing-instances {
        TenantA {
            instance-type vrf;
            interface irb.100;
            interface irb.101;
            interface irb.200;
            interface irb.3001;
            interface lo0.1;
            vrf-target target:9999:1;
            routing-options {
                multicast {
                    pim-to-igmp-proxy {
                        upstream-interface irb.3001;
                    }
                }
                auto-export;
            }
            protocols {
                pim {
                    passive;
                    interface irb.100;
                    interface irb.101;
                    interface irb.3001;
                }
            }
        }
    }
    vlans {
        v100 {
            vlan-id 100;
            l3-interface irb.100;
            vxlan {
                vni 100;
            }
        }
        v101 {
            vlan-id 101;
            l3-interface irb.101;
            vxlan {
                vni 101;
            }
        }
       v3001 {
            description mVLAN-TenantA;
            vlan-id 3001;
            l3-interface irb.3001;
            vxlan {
                vni 3001;
            }
        }
      }
    }
```

Release History Table

Release	Description
18.1R2-S1	Junos Fusion Data Center with EVPN is able to support PIM-less multicast within the fabric for users who do not want to run PIM on their network between aggregation devices, or between the aggregation devices and the gateways.

Related Documentation

- Understanding Multicast Replication in a Junos Fusion on page 957
- Enabling Configuration Synchronization Between Aggregation Devices in a Junos Fusion on page 43
- Understanding EVPN in a Junos Fusion Data Center on page 26

Understanding Layer 3 Multicast Convergence Enhancements for Dual Aggregation Devices in a Junos Fusion

When you configure Protocol Independent Multicast (PIM) on a Junos Fusion with dual aggregation devices in an MC-LAG topology for managing Layer 3 multicast traffic over IRB interfaces, one aggregation device acts as the designated router (DR) and actively forwards multicast traffic for a multicast group. If that aggregation device becomes unavailable, the other aggregation device detects the peer is down, takes over the DR role, builds the multicast forwarding tree, and multicast traffic flow resumes. Starting in Junos OS Release 17.2R1, to reduce multicast traffic convergence time and resume traffic forwarding more quickly in Junos Fusion topologies featuring dual aggregation devices, you can enable PIM dual designated router mode or enhanced dual designated router mode on interfaces with multicast traffic.

- PIM Dual Designated Router Mode on page 955
- Enhanced PIM Dual Designated Router Mode for Junos Fusion on page 956
- Configuring Dual Designated Router Mode on page 956

PIM Dual Designated Router Mode

With PIM dual designated router mode enabled, one aggregation device acts as the primary DR and the other acts as the standby DR for the multicast group. Both aggregation devices join the multicast distribution tree and receive the multicast traffic, which enables the standby DR aggregation device to more quickly take over forwarding multicast packets if the primary DR aggregation device fails. Both aggregation devices forward the multicast packets until the PIM assert mechanism elects which aggregation device should be the PIM forwarder. The aggregation device that loses the PIM forwarder election stops forwarding the multicast traffic to avoid wasting bandwidth sending duplicate packets.

When operating in dual designated router mode, the convergence delay is limited to the standby DR detecting the DR is down, and then the standby DR quickly takes over forwarding the multicast traffic. However, when the original DR aggregation device comes back online, it resumes the DR role and begin receiving and forwarding multicast traffic. Both aggregation devices forward copies of multicast packets for a short time again until the PIM forwarder election causes one aggregation device to stop forwarding. Relying

on the PIM assert mechanism to stop duplicate multicast packet traffic might not scale well when managing traffic for a large number of multicast groups.

See *Multichassis Link Aggregation Features, Terms, and Best Practices* for more information on PIM dual designated router mode on peers in an MC-LAG.

Enhanced PIM Dual Designated Router Mode for Junos Fusion

You can enable enhanced PIM dual designated router mode in a Junos Fusion with dual aggregation devices, which further improves convergence time after primary DR failure, and eliminates sending duplicate packets.

With enhanced PIM dual designated router mode configured, both aggregation devices join the multicast forwarding tree and receive multicast data, but only the primary DR aggregation device forwards the traffic. The PIM assert mechanism is not used to elect which aggregation device should stop forwarding duplicate multicast packets; the standby DR receives the traffic but drops the packets. If the primary DR becomes unavailable, the standby DR switches to primary DR role and quickly takes over forwarding the multicast traffic.

When the standby DR aggregation device switches to primary DR role, it also raises its DR priority level to ensure that it retains the primary DR role when the original primary DR aggregation device comes back online (instead of both aggregation devices switching roles again). Multicast traffic forwarding continues without interruption, and without generating duplicate traffic.

Configuring Dual Designated Router Mode

To enable dual designated router mode on a Junos Fusion with dual aggregation devices, include the following command when configuring IRB or VLAN interfaces handling traffic for multicast groups:

set protocols pim interface *interface-name* dual-dr

For example:

```
user@device# set protocols pim interface vlan.100 dual-dr
```

To enable enhanced dual designated router mode, add the **enhanced** option to the **dual-dr** configuration statement, as follows:

set protocols pim interface *interface-name* dual-dr enhanced

For example:

```
user@device# set protocols pim interface irb.500 dual-dr enhanced
yeah
```


Release History Table

Release	Description
17.2R1	Starting in Junos OS Release 17.2R1, to reduce multicast traffic convergence time and resume traffic forwarding more quickly in Junos Fusion topologies featuring dual aggregation devices, you can enable PIM dual designated router mode or enhanced dual designated router mode on interfaces with multicast traffic.

Related Documentation

- *Multichassis Link Aggregation Features, Terms, and Best Practices*
- dual-dr on page 86

Understanding Multicast Replication in a Junos Fusion

This topic introduces how multicast packets are replicated in a Junos Fusion and forwarded to multicast subscribers on satellite device extended ports. This topic covers:

Multicast Replication Overview

Aggregation devices manage the traffic flow from multicast sources to multicast destination ports in a Junos Fusion as illustrated in Figure 1. Multicast traffic flow management is similar to the way Junos Fusion unicast traffic is managed, except the aggregation device resolves the source packet forwarding path to multiple destination ports.

Figure 16: Multicast Replication in a Junos Fusion

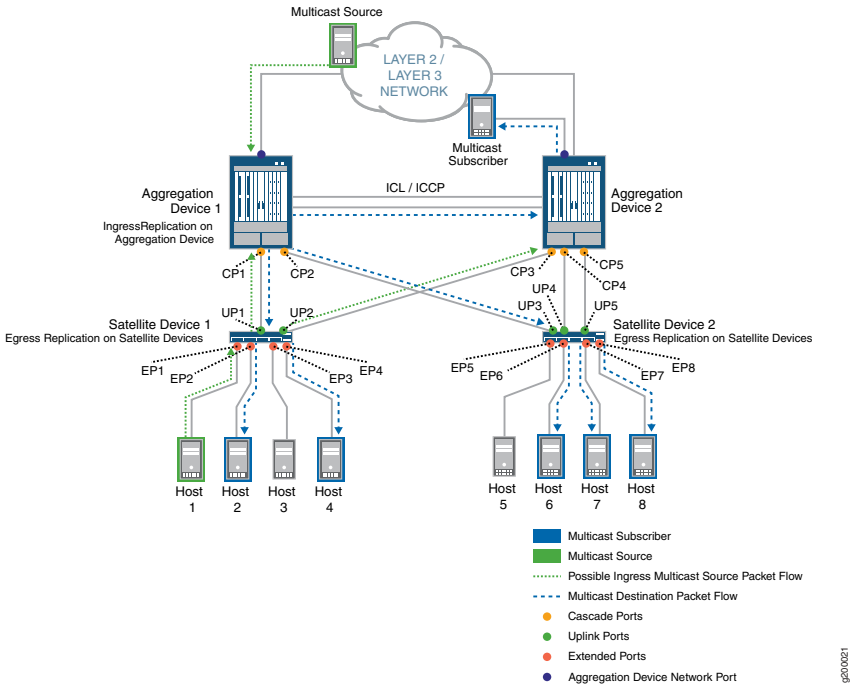

As shown in the diagram, multicast source packets might be received through a network port on the aggregation device or an extended port on a satellite device. When a multicast source packet ingresses at a satellite device, the satellite device sends the source packet on an uplink port to the aggregation device, load-balancing forwarded source traffic over the available uplink ports (including uplink ports to either available aggregation device in Junos Fusion environments with dual aggregation devices).

All multicast destination resolution is done on the ingress aggregation device. When the multicast destination ports are extended ports on satellite devices, the aggregation device uses E-channel Identifier (ECID) mappings to determine the forwarding paths to the destination extended ports, including which cascade ports link to the corresponding satellite devices. Multicast traffic flow to destination satellite devices is load-balanced over the available cascade ports to each destination satellite device. Satellite devices use the ECID in the multicast packets from the aggregation device to determine which local port or ports should receive the multicast traffic.

NOTE: **This behavior applies similarly to flooding unknown unicast traffic within a VLAN in a Junos Fusion.**

By default, the ingress aggregation device replicates multicast and broadcast packets to forward to each destination extended port. This behavior is referred to as *ingress multicast replication*. The aggregation device sends multiple copies of the packet to each satellite device, one copy for each destination extended port on that satellite device. See "Ingress Multicast Replication at the Aggregation Device" on page 961 for more information.

Starting in Junos OS 16.1, Junos Fusion supports enabling *egress multicast replication*, also referred to as *local replication*, where satellite devices replicate the multicast and broadcast packets destined for their local ports. Starting in Junos OS 17.2R1, local replication is supported on Junos Fusion topologies with dual aggregation devices. Local replication helps to distribute most of the replication load from aggregation devices to the satellite devices where the traffic egresses, and reduces traffic on cascade ports. When enabled, local replication applies to all satellite devices in the Junos Fusion; you cannot enable it only for individual satellite devices.

Egress replication behavior differs slightly for different types of multicast and broadcast traffic. See "Egress Multicast Replication on the Satellite Devices" on page 963 for details.

To avoid creating loops and broadcast storms, for both ingress and egress multicast replication, both the aggregation devices and satellite devices maintain split-horizon next-hop information to prevent resending multicast or broadcast packets back out of the ingress port.

ECIDs for Multicast Traffic

Traffic sent between aggregation devices and satellite devices is sent over a logical path, called an *e-channel*. The packets sent between the aggregation device and satellite device include the IEEE 802.1BR E-channel tag (ETAG) header with an E-channel identifier (ECID). The ECID identifies the path that will be used in forwarding traffic packets. Each extended port is identified by a unique ECID value. Junos Fusion reserves ECID values 1 through 4095 for unicast data packets. ECID values from 4096 through 16382, also called *multicast ECIDs*, are reserved for multicast and broadcast data packets. Multicast ECIDs correspond to one or more destination extended ports on a satellite device.

The aggregation device automatically creates virtual interfaces named **sd-*fpc-id*/0/0** (where *fpc-id* is the satellite device ID) to represent satellite devices, and uses these virtual interfaces as the next-hop interface when forwarding traffic to a satellite device.

When local replication is disabled, similar to unicast packet flow (see "Understanding the Flow of Data Packets in a Junos Fusion Topology" on page 37), the aggregation device assigns a unicast ECID value for each destination extended port on a satellite device for unicast traffic and multicast traffic. The aggregation device replicates multicast packets, tags them with the assigned ECID for the destination, and sends a copy to each destination extended port by way of the corresponding satellite device interface.

When local replication is enabled, Junos Fusion uses ECID values greater than 4095 to identify multicast traffic and associate one or more extended ports on a satellite device as the multicast destination. Junos Fusion dynamically assigns multicast ECID values. When the aggregation device requires a new multicast ECID value for a group of ports or if it needs to add a port to an existing ECID, the process is as follows:

1. The aggregation device sends a request to the satellite device to assign an ECID value (or update an existing ECID mapping when multicast group or VLAN membership changes).
2. The satellite device assigns an ECID value and adds an entry to its ECID table to map the ECID value to the corresponding extended ports.

3. The satellite device sends a message back to the aggregation device with the ECID value that satisfies the request for the corresponding extended ports.
4. The aggregation device adds this information to its ECID table. It uses the **sd** virtual interface as the next-hop interface to send multicast traffic for those extended ports on the satellite device.

When the satellite device receives a data packet from the aggregation device with a multicast ECID value, the satellite device begins to replicate and forward packets to the extended ports associated with that ECID. Satellite devices do not do multicast lookups; they only maintain ECID tables to determine the port or ports corresponding to an ECID in a packet received from the aggregation device. The aggregation devices perform all multicast route maintenance and forwarding path resolution.

NOTE: **An ECID value is only unique locally on the satellite device. Another satellite device can use the same ECID value for its own extended ports. The aggregation device maintains a composite mapping of ECID values to the different satellite devices and the corresponding extended ports on those satellite devices.**

Multicast Replication Limitations in a Junos Fusion

Junos Fusion strives to optimize data replication on satellite devices when local replication is enabled. However, for the following features, although local replication might be enabled, Junos Fusion does not trigger egress replication optimization, and instead defaults to using ingress replication:

- Multicast traffic on pure Layer 3 extended ports
- Multicast Listener Discovery (MLD) snooping on an IPv6 network

You might choose not to enable local replication because egress multicast replication is incompatible with some Junos OS protocol and traffic management features programmed on individual extended ports. The following features do not work when egress multicast replication is enabled; if you want to use these features, you cannot take advantage of egress replication optimizations:

- VLAN tag manipulations, such as VLAN tag translations, VLAN tag stacking, and VLAN per-port policies. Using egress multicast replication with this feature can cause dropped packets due to unexpected VLAN tags.
- Multicast support for the extended ports on the edge side of Pseudowire connection in a VPLS network.
- Multicast support for the extended ports on the edge side of EVPNs.
- Multicast VPN deployments.
- Features that perform egress actions on individual extended ports, such as egress local-port mirroring (port mirroring on endpoints connected to satellite device extended ports).

Release History Table

Release	Description
17.2R1	Starting in Junos OS 17.2R1, local replication is supported on Junos Fusion topologies with dual aggregation devices.
16.1	Starting in Junos OS 16.1, Junos Fusion supports enabling *egress multicast replication*, also referred to as *local replication*, where satellite devices replicate the multicast and broadcast packets destined for their local ports.

Related Documentation

- Understanding the Flow of Data Packets in a Junos Fusion Topology on page 37
- Ingress Multicast Replication at the Aggregation Device on page 961
- Egress Multicast Replication on the Satellite Devices on page 963
- Configuring Egress Replication on a Junos Fusion on page 967

Ingress Multicast Replication at the Aggregation Device

By default, Junos Fusion uses ingress replication to create and forward copies of packets to multicast destinations.

Figure 17 on page 961 illustrates ingress replication mode, where the ingress aggregation device replicates the multicast packets for all destination extended ports. The data packet flow is similar to unicast data packet flow from the multicast source to each destination.

Figure 17: Ingress Replication at the Aggregation Device

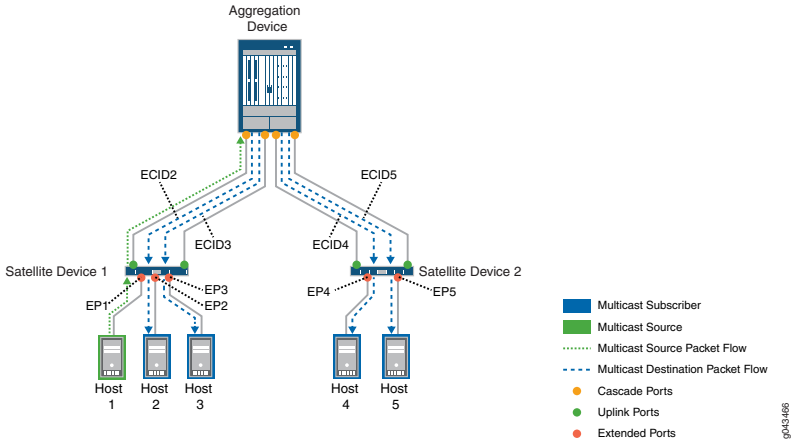

The figure shows multicast source data packets are received from a multicast source on an extended port, EP1, with traffic destined for endpoints connected to extended ports EP2 through EP5. Each extended port has an associated E-channel Identifier (ECID) value that the aggregation device uses to forward the data packet to each destination extended

port. The aggregation device replicates the data packets for all multicast destination extended ports on all attached satellite devices, as follows:

- Two packets for satellite device 1 (EP2 and EP3)
- Two packets for satellite device 2 (EP4 and EP5)

The aggregation device sends each packet on the respective cascade ports to the satellite devices with destination extended ports. Multicast traffic destined for EP2 is tagged with ECID2, traffic destined for EP3 is tagged with ECID3, and so on for all the destination extended ports on both satellite devices. The satellite devices receive and forward the packets to their respective extended ports.

The aggregation device maintains multicast routing information and next-hop tables, including ECID label mappings to satellite devices and the corresponding extended ports. For a multicast destination on a satellite device, the aggregation device resolves the next-hop path through a corresponding cascade port that reaches the satellite device. When there are multiple cascade port links to a satellite device, the aggregation device load-balances the traffic to choose which cascade port to use.

Each receiving satellite device maintains tables that map the assigned ECIDs to the corresponding extended ports, and simply forwards outgoing multicast packets to the target extended ports. The satellite devices do not maintain multicast routing information.

Other multicast destinations might be reached through ports on the aggregation devices, rather than through extended ports. For these destinations, the aggregation device creates and sends copies to those local ports directly. In Junos Fusion topologies with dual aggregations devices, for multicast subscribers on ports on the other aggregation device, the ingress aggregation device creates copies for those ports, and sends them over the ICL link to the other aggregation device to forward to its local destination ports.

Multicast support using ingress replication does not scale well for a large number of multicast destinations or higher bandwidth multicast traffic. Ingress replication increases aggregation device Packet Forwarding Engine processing load, and consumes bandwidth on the links between cascade ports and uplink ports, potentially resulting in link oversubscription and latency among multicast recipients.

You can alternatively enable *egress multicast replication*, also referred to as *local replication*. Local replication optimizes multicast replication by distributing the replication load between the aggregation devices and the satellite devices that have multicast destination ports. However, local replication requires more control plane processing than ingress replication, which results in a slight increase in multicast group join and leave latency. See "Egress Multicast Replication on the Satellite Devices" on page 963 for more information on how local replication works for different types of multicast or broadcast traffic.

Related Documentation

- Understanding Multicast Replication in a Junos Fusion on page 957
- Egress Multicast Replication on the Satellite Devices on page 963
- Understanding the Flow of Data Packets in a Junos Fusion Topology on page 37

Egress Multicast Replication on the Satellite Devices

Egress multicast replication is also referred to as *local replication*. In egress or local replication mode, the aggregation device optimizes replication by off-loading replication whenever possible to satellite devices that have destination extended ports. From the point of view of the aggregation device, replication is supported at an egress port, and from the point of view of the satellite device, replication is managed locally. Local replication alleviates some of the problems associated with ingress replication, reducing the potential for bandwidth oversubscription and replication latency when there are a large number of receivers.

Local replication is performed at Layer 2. Each receiving satellite device maintains tables that map the assigned ECIDs to corresponding destination extended ports, and simply forward outgoing multicast or broadcast packets to local extended ports. For Layer 3 multicast traffic, such as when forwarding packets on VLANs, the aggregation device performs replication to resolve Layer 3 information not maintained by satellite devices.

This topic describes local replication behavior with the following types of multicast or broadcast traffic:

- Local Replication for Layer 2 Multicast Traffic with IGMP Snooping on page 963
- Local Replication for VLAN Flooding on page 964
- Local Replication for Layer 3 Multicast Traffic Over IRB Interfaces on page 966

Local Replication for Layer 2 Multicast Traffic with IGMP Snooping

Figure 18 on page 963 illustrates Layer 2 multicast traffic flow with IGMP snooping when local replication is enabled.

Figure 18: Local Replication with Layer 2 Multicast and IGMP Snooping

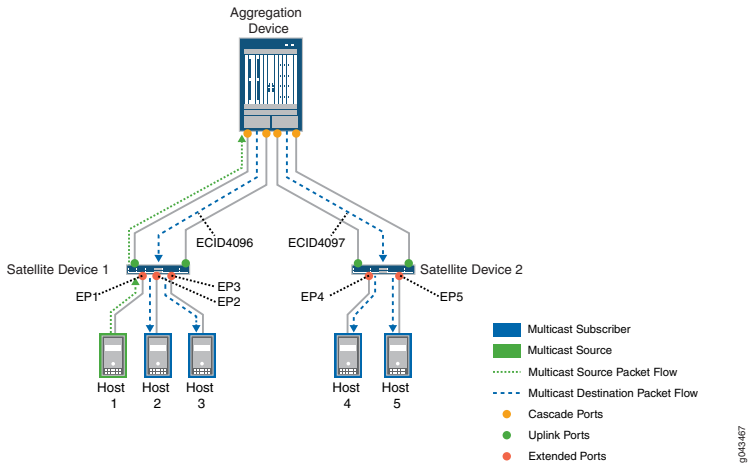

A data packet is received from a multicast source on an extended port, EP1, with traffic destined for endpoints connected to extended ports EP2 through EP5. The aggregation device acquires *multicast* ECIDs from the satellite devices, which represent a set of

multicast destination extended ports on each satellite device. The diagram shows ECID value ECID4096 is assigned to the multicast subscribers behind extended ports EP2 and EP3 on satellite device 1, and ECID4097 is assigned to the multicast subscribers behind extended ports EP4 and EP5 on satellite device 2. The aggregation device creates only one copy of the source packet for each satellite device that has multicast destination extended ports, inserts the corresponding satellite device multicast ECID value in the IEEE 802.1BR ETAG header of each copy, and forwards the copies to those satellite devices. In this case, the aggregation device creates two copies, forwards one with ECID4096 to satellite device 1, and forwards the other with ECID4097 to satellite device 2. Each satellite device receives its copy and uses the multicast ECID value to determine which of its extended ports should receive the multicast traffic. Satellite device 1 replicates the packet and forwards copies to EP2 and EP3; satellite device 2 replicates the packet and forwards copies to EP4 and EP5.

When forwarding replicated multicast packets to satellite devices, the aggregation device resolves the next-hop path through a corresponding cascade port that reaches the satellite device. When there are multiple cascade port links to a satellite device, the aggregation device load-balances the traffic when choosing which cascade port to use.

Other multicast destinations might be reached through ports on the aggregation devices, rather than through extended ports. For these destinations, the aggregation device creates and sends copies to those local ports directly. In Junos Fusion topologies with dual aggregations devices, for multicast subscribers behind ports on the other aggregation device, the ingress aggregation device creates copies for those ports, and sends them over the ICL link to the other aggregation device to forward to its local destination ports. This behavior is the same for ingress or egress multicast replication.

Local Replication for VLAN Flooding

An aggregation device might initiate VLAN flooding (broadcasting or flooding the packet out to all interfaces in the VLAN) to learn the MAC address for a destination that is not already in its Ethernet switching tables. When local replication is not enabled, the aggregation device uses ingress replication, creating and sending copies to each destination extended port on each satellite device that has destination extended ports in the VLAN. With local replication enabled, the aggregation device requests multicast ECIDs to represent the extended ports in the VLAN on each satellite device. The aggregation device sends a copy of the source packet tagged with each ECID in the IEEE 802.1BR header to the corresponding satellite device. Each receiving satellite device does the replication locally for its extended ports in the VLAN.

Figure 19 on page 965 illustrates the packet flow for VLAN flooding when local replication is enabled.

Figure 19: Local Replication with VLAN Flooding

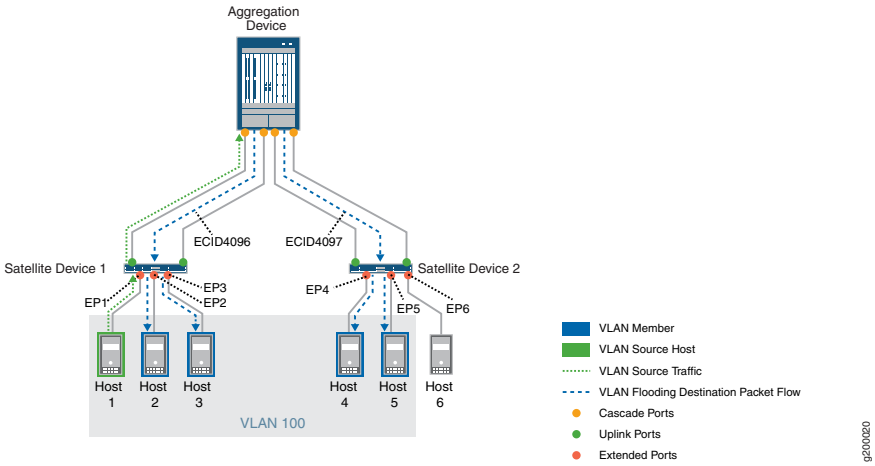

In this example, a multicast source packet for VLAN 100 ingresses on EP1, and satellite device 1 forwards the packet to the aggregation device. The aggregation device cannot resolve the destination MAC address, and decides to flood the packet to all extended port destinations in VLAN 100.

NOTE: **When a source packet ingresses at a satellite device with uplink ports to dual aggregation devices, the satellite device load-balances forwarding the ingress traffic among the available uplink ports, so either aggregation device might receive the source packet and manage flooding the packet to destination VLAN members.**

Multicast ECID4096 is allocated to represent extended ports on satellite device 1 that are members of VLAN 100—EP1, EP2 and EP3, and multicast ECID4097 represents extended ports on satellite device 2 that are also members of VLAN 100—EP4 and EP5. Host 6 behind extended port EP6 is not a member of VLAN 100 and is not a destination for the flooded traffic. The aggregation device creates one copy of the packet tagged with ECID4096 and sends it to satellite device 1, and sends one copy tagged with ECID4097 to satellite device 2. Satellite device 1 replicates and forwards the packet for its own destination ports in VLAN 100, EP2 and EP3. (The ingress ECID split-horizon mechanism prevents forwarding traffic to the ingress port, EP1.) Satellite device 2 replicates and forwards the packet for EP4 and EP5, its local destination ports in VLAN 100. The extended port mapping for ECID4097 does not include EP6, so satellite device 2 does not forward the packet to that port.

When there are multiple cascade port links to a satellite device, the aggregation device load-balances the traffic when choosing which cascade port to use.

For destination VLAN members reachable through aggregation device ports (rather than extended ports), the aggregation device creates and sends copies to those local ports directly. In Junos Fusion topologies with dual aggregation devices, when there are VLAN members behind ports on the other aggregation device, the ingress aggregation device

creates copies for those ports, and sends them over the ICL link to the other aggregation device to forward to its local destination ports. This behavior is the same for ingress or egress multicast replication.

Local Replication for Layer 3 Multicast Traffic Over IRB Interfaces

Integrated Routing and Bridging (IRB) provides support for Layer 2 bridging and Layer 3 routing on the same interface, and IRB interfaces are used to route traffic between VLANs. Because satellite devices do not maintain Layer 3 routing information, local replication on the satellite devices only occurs for Layer 2 traffic, and the aggregation device manages the replication of multicast destination packets at Layer 3. The aggregation device replicates the multicast source packet for each IRB interface in the Layer 3 replication list for a multicast group, and performs a VLAN tag rewrite for each corresponding VLAN. When there are extended ports in multiple VLANs on a satellite device that are receivers in the same multicast group, the aggregation device sends copies to each IRB with its corresponding VLAN ID to that satellite device. If an IRB interface (VLAN membership) spans multiple satellite devices, the aggregation device creates and sends one copy to each satellite device that has multicast receivers that are members of that VLAN. Each satellite device then replicates and forwards copies of the received packet for its local multicast destination extended ports.

Figure 20 on page 966 shows an example of Layer 3 multicast replication for VLANs over IRB interfaces in a Junos Fusion. In this case, two VLANs with corresponding IRB interfaces are configured on the aggregation device. In this case, multicast source packets ingress on an aggregation device port, and multicast subscribers are connected to extended ports EP1 through EP 5, where extended ports EP1 and EP2 are in VLAN 100 and EP3 through EP5 are in VLAN 200.

Figure 20: Local Replication with Layer 3 Multicast

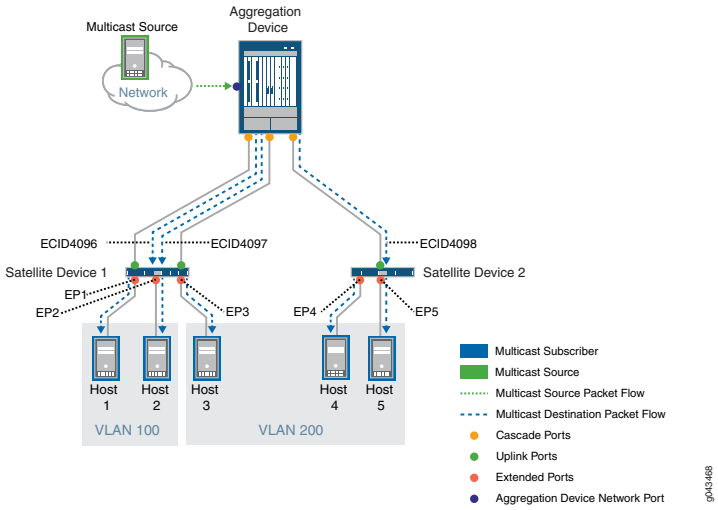

When the aggregation device receives a packet from the multicast source, it manages the Layer 3 replication by acquiring multicast ECIDs representing the destination extended ports in each VLAN on each satellite device, and creating, tagging, and forwarding copies on each VLAN's IRB interface to the satellite devices that have destination extended

ports. As the figure shows, the aggregation device creates 3 copies of the source packet, as follows:

- Multicast ECID4096 represents EP1 and EP 2 in VLAN 100 on satellite device 1. The aggregation device forwards one copy tagged with ECID4096 to satellite device 1 for the VLAN 100 IRB interface.
- Multicast ECID4097 represents EP3 in VLAN 200 on satellite device 1. The aggregation device forwards a second copy tagged with ECID4097 to satellite device 1 for the VLAN 200 IRB interface.
- Multicast ECID4098 represents EP4 and EP5 in VLAN 200 on satellite device 2. The aggregation device forwards a third copy tagged with ECID4098 for the VLAN 200 IRB interface to satellite device 2.

Each satellite device manages the Layer 2 processing by replicating the packets received from the aggregation device for the multicast subscribers behind its extended ports in each VLAN, as follows:

- Satellite device 1 replicates and forwards packets tagged with ECID4096 to extended ports EP1 and EP2, and forwards packets tagged with ECID4097 to EP3.
- Satellite device 2 replicates and forwards the packets tagged with ECID4096 to extended ports EP4 and EP5.

When there are multiple cascade port links to a satellite device, the aggregation device load-balances the traffic when choosing which cascade port to use.

For multicast destination VLAN members reachable through aggregation device ports (rather than extended ports), the aggregation device creates and sends copies to those local ports using the corresponding IRB interfaces. In Junos Fusion topologies with dual aggregation devices, when there are multicast subscribers behind ports on the other aggregation device, the ingress aggregation device creates copies for those ports, and sends them over the ICL link to the other aggregation device to forward to its local destination ports. This behavior is the same for ingress or egress multicast replication.

Related Documentation

- Understanding Multicast Replication in a Junos Fusion on page 957
- Ingress Multicast Replication at the Aggregation Device on page 961
- Configuring Egress Replication on a Junos Fusion on page 967

Configuring Egress Replication on a Junos Fusion

By default, egress multicast replication (also called *local replication*) is disabled, and Junos Fusion uses ingress replication. When you enable local replication, egress multicast replication is activated for all satellite devices that are connected to the aggregation device. You cannot enable local replication for just a few selected satellite devices, specific bridge domains, or specific route prefixes.

To enable egress multicast replication on satellite devices, configure the **local-replication** statement at the **[edit forwarding-options satellite]** hierarchy level.

```
[edit forwarding-options satellite]
user@router1# set local-replication
```

The **show multicast summary satellite** operational command displays **Egress replication: Enabled** when this feature is configured.

See "Understanding Multicast Replication in a Junos Fusion" on page 957 for an overview of Junos Fusion multicast replication and the limitations to enabling this feature. Some Junos OS protocol and traffic management features are not supported with egress replication, and you should not plan to configure local replication if you want to use those features.

Related Documentation

- Ingress Multicast Replication at the Aggregation Device on page 961
- Egress Multicast Replication on the Satellite Devices on page 963

local-replication

Syntax

local-replication

Hierarchy Level

[edit forwarding-options satellite]

Release Information

Statement introduced in Junos OS Release 16.1.
Statement introduced in Junos OS Release 17.1R1 for Junos Fusion Data Center.

Description

Enables multicast replication on all the satellite devices that are connected to the aggregation device. You cannot selectively enable local replication for specific satellite devices, bridge domains, or route prefixes.

Required Privilege Level

routing—To view this statement in the configuration.
routing-control—To add this statement to the configuration.

Related Documentation

- Configuring Egress Replication on a Junos Fusion on page 967

show ethernet-switching flood

Syntax

show ethernet-switching flood
<brief | detail | extensive>
<event-queue>
<instance *instance-name*>
<logical-system *logical-system-name*>
<route (all-ce-flood | all ve-flood | alt-root-flood | bd-flood | mlp-flood | re-flood)>
<vlan-name *vlan-name*>

Release Information

Command introduced in Junos OS Release 12.3R2.
Command introduced in Junos OS Release 12.3R2 for EX Series switches.
Command introduced in Junos OS Release 17.4R1 for QFX Series switches.

Description

(EX Series switches and QFX Series switches only) Display Ethernet-switching flooding information.

Options

none—Display all Ethernet-switching flooding information for all VLANs.

brief | detail | extensive—(Optional) Display the specified level of output.

event-queue—(Optional) Display the queue of pending Ethernet-switching flood events.

instance *instance-name*—(Optional) Display Ethernet-switching flooding information for the specified routing instance.

logical-system *logical-system-name*—(Optional) Display Ethernet-switching flooding information for the specified logical system.

route (all-ce-flood | all ve-flood | alt-root-flood | bd-flood | mlp-flood | re-flood)—(Optional) Display the following:

- **all-ce-flood**—Display the route for flooding traffic to all customer edge routers or switches if **no-local-switching** is enabled.
- **all-ve-flood**—Display the route for flooding traffic to all VPLS edge routers or switches if **no-local-switching** is enabled.
- **alt-root-flood**—Display the Spanning Tree Protocol (STP) alt-root flooding route used for the interface.
- **bd-flood**—Display the route for flooding traffic of a VLAN if **no-local-switching** is not enabled.
- **mlp-flood**—Display the route for flooding traffic to MAC learning chips.
- **re-flood**—Display the route for Routing Engine flooding to all interfaces.

vlan-name *vlan-name*—(Optional) Display Ethernet-switching flooding information for the specified VLAN.

Required Privilege Level view

List of Sample Output

Sample Output

show ethernet-switching flood

```
user@host> show ethernet-switching flood
Name: __juniper_private1__
CEs: 0
VEs: 0
Name: default-switch
CEs: 9
VEs: 0
VLAN Name: VLAN101
Flood Routes:
  Prefix    Type          Owner                 NhType          NhIndex
  0x3057b/51 FLOOD_GRP_COMP_NH __all_ces__      comp            12866
  0x30004/51 FLOOD_GRP_COMP_NH __re_flood__     comp            12863
VLAN Name: VLAN102
Flood Routes:
  Prefix    Type          Owner                 NhType          NhIndex
  0x3057c/51 FLOOD_GRP_COMP_NH __all_ces__      comp            12875
  0x30005/51 FLOOD_GRP_COMP_NH __re_flood__     comp            12872
VLAN Name: VLAN103
Flood Routes:
  Prefix    Type          Owner                 NhType          NhIndex
  0x3057d/51 FLOOD_GRP_COMP_NH __all_ces__      comp            12884
  0x30006/51 FLOOD_GRP_COMP_NH __re_flood__     comp            12881
```

show ethernet-switching flood brief

```
user@host> show ethernet-switching flood brief
Name                Active CEs         Active VEs
__juniper_private1__ 0                 0
default-switch      9                  0
```

show ethernet-switching flood detail

```
user@host> show ethernet-switching flood detail
Name: __juniper_private1__
CEs: 0
VEs: 0
Name: default-switch
CEs: 9
VEs: 0
VLAN Name: VLAN101
Flood Routes:
  Prefix    Type          Owner                 NhType          NhIndex
  0x3057b/51 FLOOD_GRP_COMP_NH __all_ces__      comp            12866
  0x30004/51 FLOOD_GRP_COMP_NH __re_flood__     comp            12863
```

```
VLAN Name: VLAN102
Flood Routes:
  Prefix    Type          Owner                 NhType          NhIndex
  0x3057c/51 FLOOD_GRP_COMP_NH __all_ces__      comp            12875
  0x30005/51 FLOOD_GRP_COMP_NH __re_flood__     comp            12872
VLAN Name: VLAN103
Flood Routes:
  Prefix    Type          Owner                 NhType          NhIndex
  0x3057d/51 FLOOD_GRP_COMP_NH __all_ces__      comp            12884
  0x30006/51 FLOOD_GRP_COMP_NH __re_flood__     comp            12881
```

show ethernet-switching flood extensive

```
user@host> show ethernet-switching flood extensive
Name: __juniper_private1__
CEs: 0
VEs: 0
Name: default-switch
CEs: 9
VEs: 0
VLAN Name: VLAN101
  Flood route prefix: 0x3057b/51
  Flood route type: FLOOD_GRP_COMP_NH
  Flood route owner: __all_ces__
  Flood group name: __all_ces__
  Flood group index: 1
  Nexthop type: comp
  Nexthop index: 12866
    Flooding to:
    Name             Type          NhType          Index
    __all_ces__      Group          comp            12860
        Composition: split-horizon
        Flooding to:
        Name             Type          NhType          Index
        ae20.0           CE             ucst            7605

  Flood route prefix: 0x30004/51
  Flood route type: FLOOD_GRP_COMP_NH
  Flood route owner: __re_flood__
  Flood group name: __re_flood__
  Flood group index: 65534
  Nexthop type: comp
  Nexthop index: 12863
    Flooding to:
    Name             Type          NhType          Index
    __all_ces__      Group          comp            12860
        Composition: split-horizon
        Flooding to:
        Name             Type          NhType          Index
        ae20.0           CE             ucst            7605
VLAN Name: VLAN102

  Flood route prefix: 0x3057c/51
  Flood route type: FLOOD_GRP_COMP_NH
  Flood route owner: __all_ces__
  Flood group name: __all_ces__
  Flood group index: 1
  Nexthop type: comp
  Nexthop index: 12875
    Flooding to:
    Name             Type          NhType          Index
```

```
    __all_ces__      Group          comp            12869
        Composition: split-horizon
        Flooding to:
        Name             Type          NhType          Index
        ae20.0           CE             ucst            7605

  Flood route prefix: 0x30005/51
  Flood route type: FLOOD_GRP_COMP_NH
  Flood route owner: __re_flood__
  Flood group name: __re_flood__
  Flood group index: 65534
  Nexthop type: comp
  Nexthop index: 12872
    Flooding to:
    Name             Type          NhType          Index
    __all_ces__      Group          comp            12869
        Composition: split-horizon
        Flooding to:
        Name             Type          NhType          Index
        ae20.0           CE             ucst            7605
VLAN Name: VLAN103

  Flood route prefix: 0x3057d/51
  Flood route type: FLOOD_GRP_COMP_NH
  Flood route owner: __all_ces__
  Flood group name: __all_ces__
  Flood group index: 1
  Nexthop type: comp
  Nexthop index: 12884
    Flooding to:
    Name             Type          NhType          Index
    __all_ces__      Group          comp            12878
        Composition: split-horizon
        Flooding to:
        Name             Type          NhType          Index
        ae20.0           CE             ucst            7605

  Flood route prefix: 0x30006/51
  Flood route type: FLOOD_GRP_COMP_NH
  Flood route owner: __re_flood__
  Flood group name: __re_flood__
  Flood group index: 65534
  Nexthop type: comp
  Nexthop index: 12881
    Flooding to:
    Name             Type          NhType          Index
    __all_ces__      Group          comp            12878
        Composition: split-horizon
        Flooding to:
        Name             Type          NhType          Index
        ae20.0           CE             ucst            7605
VLAN Name: VLAN104
```

show ethernet-switching flood extensive (Junos Fusion Data Center with EVPN)

```
user@host> show ethernet-switching flood extensive
Name: __juniper_private1__
CEs: 0
VEs: 0
Name: default-switch
CEs: 3
```

```
VEs: 3
VLAN Name: v100
  Flood route prefix: 0x3001b/51
  Flood route type: FLOOD_GRP_COMP_NH
  Flood route owner: __ves__
  Flood group name: __ves__
  Flood group index: 0
  Nexthop type: comp
  Nexthop index: 1946
    Flooding to:
    Name             Type          NhType          Index
    __all_ces__      Group          comp            1945
        Composition: split-horizon
        Flooding to:
        Name             Type          NhType          Index
        ae0.0            CE             ucst            1886

  Flood route prefix: 0x3000f/51
  Flood route type: FLOOD_GRP_COMP_NH
  Flood route owner: __all_ces__
  Flood group name: __all_ces__
  Flood group index: 1
  Nexthop type: comp
  Nexthop index: 1905
    Flooding to:
    Name             Type          NhType          Index
    __ves__          Group          comp            1971
        Composition: flood-to-all
        Flooding to:
        Name             Type          NhType          Index
        vtep.32769       CORE_FACING    venh            1917
        vtep.32770       CORE_FACING    venh            1918
        vtep.32771       CORE_FACING    venh            1923
    Flooding to:
    Name             Type          NhType          Index
    __all_ces__      Group          comp            1945
        Composition: split-horizon
        Flooding to:
        Name             Type          NhType          Index
        ae0.0            CE             ucst            1886

  Flood route prefix: 0x30001/51
  Flood route type: FLOOD_GRP_COMP_NH
  Flood route owner: __re_flood__
  Flood group name: __re_flood__
  Flood group index: 65534
  Nexthop type: comp

        Name             Type          NhType          Index
        vtep.32769       CORE_FACING    venh            1917
        vtep.32770       CORE_FACING    venh            1918
        vtep.32771       CORE_FACING    venh            1923
    Flooding to:
    Name             Type          NhType          Index
    __all_ces__      Group          comp            1907
        Composition: split-horizon
        Flooding to:
        Name             Type          NhType          Index
        ae12.0           CE             ucst            1681

  Flood route prefix: 0x30006/51
```

```
  Flood route type: FLOOD_GRP_COMP_NH
  Flood route owner: __re_flood__
  Flood group name: __re_flood__
  Flood group index: 65534
  Nexthop type: comp
  Nexthop index: 1891
    Flooding to:
    Name             Type          NhType          Index
    __ves__          Group          comp            1961
        Composition: flood-to-all
        Flooding to:
        Name             Type          NhType          Index
        vtep.32769       CORE_FACING    venh            1917
        vtep.32770       CORE_FACING    venh            1918
        vtep.32771       CORE_FACING    venh            1923
    Flooding to:
    Name             Type          NhType          Index
    __all_ces__      Group          comp            1907
        Composition: split-horizon
        Flooding to:
        Name             Type          NhType          Index
        ae12.0           CE             ucst            1681

...
```

show ethernet-switching flood satellite

Syntax

show ethernet-switching flood satellite
<brief | detail | extensive>
<vlan--name *vlan-name*>
<vswitch-name *vswitch-name*>

Release Information

Command introduced in Junos OS Release 17.2R1 for Junos Fusion Data Center.

Description

Display VLAN flood routing information for the satellite devices in Junos Fusion Data Center.

This command lists flood routes by route prefix for each VLAN. Each flood route prefix entry lists the ingress replication next-hop ID (**NhIndex**). When egress (local) replication is enabled and the VLAN has multiple destination extended ports on a satellite device, the aggregation device:

- Creates a satellite device next-hop chain to reach those destinations through their corresponding satellite devices.
- Updates the flood route entry with a satellite next-hop chain ID (**Satellite-Nh**).

When a flood route does not have a satellite next-hop chain, the value **0** is displayed in the **Satellite-Nh** column. When the **Satellite-Nh** value is non-zero, the aggregation device uses the satellite next-hop chain instead of the original ingress replication next-hop (**NhIndex**). You can see satellite device flood next-hop chain details, including the ECIDs assigned to satellite device flood destination extended ports, using the **detail** option and the **vlan-name** option for a specific VLAN.

Options

brief | detail | extensive—(Optional) Display the specified level of output.

vlan-name *vlan-name*—Display VLAN flooding information for the specified VLAN.

vswitch-name *vswitch-name*—Display VLAN flooding information for a specified *virtual* satellite device.

Required Privilege Level

view

Related Documentation

- Understanding Multicast Replication in a Junos Fusion on page 957
- Egress Multicast Replication on the Satellite Devices on page 963

List of Sample Output

show ethernet-switching flood satellite vlan-name (detail view for specific VLAN in Junos Fusion Data Center with EVPN) on page 978
show ethernet-switching flood satellite (extensive view) on page 978

Output Fields Table 47 on page 976 lists the output fields for the **show ethernet-switching flood satellite** command. Output fields are listed in the approximate order in which they appear, although the display order varies between the different levels of output.

Table 47: show ethernet-switching flood satellite Command Output Fields

Field Name	Field Description	Level of Output
Vlan	VLAN name.	All
Flood Routes	Flood route information listed by route prefix.	All
Prefix	Flood route prefix.	All
Token	Internal ID for flood route prefix.	All
NhIndex	The ingress replication next-hop for the flood route.	All
Satellite-Nh	Satellite device next-hop ID when local replication is enabled and there are multiple flood destination extended ports.	All
Next-hop information	Details for each next hop, listed by next-hop or satellite next-hop ID.	detail extensive
aggregation-device	Next-hop interfaces for ports that are flood destinations on the aggregation device, listed by next-hop ID.	detail extensive
VXLAN RVTEP	Appears only if aggregation devices are deployed in a Junos Fusion Data Center with an EVPN-VXLAN architecture. IP addresses of remote aggregation devices that function as virtual tunnel endpoints (VTEPs) in Junos Fusion Data Center.	detail extensive
satellite-device-id *id*	Next-hop interfaces for extended ports that are flood destinations on satellite devices, listed by satellite next-hop ID.	detail extensive
label	ECID assigned to a satellite device interface.	detail extensive
When	Elaspsed time since an event related to a flood route entry change.	extensive
Event	Brief description of the event related to a flood route entry change.	extensive
Action	Brief description of actions that resulted from the event.	extensive

Sample Output

show ethernet-switching flood satellite

```
user@host> show ethernet-switching flood satellite

VSwitch instance: default-switch
  ------------ Vlan: default ------------
Flood Routes:
Prefix                   Token         NhIndex      Satellite-Nh
00.03.00.01.60.00.60/51  0x30003       1778         0
00.03.ff.fe.60.00.20/51  0x30001       1779         0
------------ Vlan: VLAN800 ------------
Flood Routes:
Prefix                   Token         NhIndex      Satellite-Nh
00.04.00.01.60.00.40/51  0x30002       1759         1785
00.04.ff.fe.60.00.00/51  0x30000       1760         1786
```

show ethernet-switching flood satellite vlan-name (specific VLAN)

```
user@host> show ethernet-switching flood satellite vlan-name VLAN100

VSwitch instance: default-switch
  ------------ Vlan: VLAN100 ------------
    Flood Routes:
    Prefix                   Token         NhIndex      Satellite-Nh
    00.15.00.01.60.06.40/51  0x30032       968          1553
    00.15.ff.fe.60.02.80/51  0x30014       965          1550
```

show ethernet-switching flood satellite vlan-name (detail view for specific VLAN)

This sample output shows the original next-hop chain (**NhIndex** 968) and satellite next-hop chain (**Satellite-Nh** 1553) with corresponding assigned ECID labels representing destination extended ports on each satellite device.

```
user@host> show ethernet-switching flood satellite vlan-name VLAN100 detail
VSwitch instance: default-switch
  ------------ Vlan: VLAN100 ------------
    Flood route prefix       Token
    00.15.00.01.60.06.40/51  0x30032
      Next-hop information:
        968
          ->962
              satellite-device-id 100:
                  ->610 xe-100/0/6.0
                  ->611 xe-100/0/7.0
              satellite-device-id 103:
                  ->682 xe-103/0/30.0
                  ->683 xe-103/0/31.0
                  ->684 xe-103/0/32.0
                  ->685 xe-103/0/33.0
                  ->686 xe-103/0/34.0
                  ->687 xe-103/0/35.0
        1553
          ->1415
              satellite-device-id 100:
                  ->612 sd-100/0/0.32770 label=4129
```

```
                    satellite-device-id 103:
                        ->1080 sd-103/0/0.32770 label=4116
```

show ethernet-switching flood satellite vlan-name (detail view for specific VLAN in Junos Fusion Data Center with EVPN)

This sample output shows the original next-hop chain (**NhIndex** 1984) and satellite next-hop chain (**Satellite-Nh** 2044) with corresponding assigned ECID labels representing destination extended ports on each satellite device.

```
user@host> show ethernet-switching flood satellite vlan-name v100 detail
VSwitch instance: default-switch
  ------------ Vlan: v100 ------------
...
    Flood route prefix       Token
    00.03.00.01.60.01.e0/51  0x3000F
      Next-hop information:
        1984
          ->1982
              ->1922 VXLAN RVTEP: 192.168.3.33
              ->1918 VXLAN RVTEP: 192.168.2.22
              ->1956 VXLAN RVTEP: 192.168.4.44
          ->2009
              satellite-device-id 100:
                  ->1959 xe-100/0/15:0.0
              satellite-device-id 101:
                  ->1988 xe-101/0/27.0
        2044
          ->1982
              ->1922 VXLAN RVTEP: 192.168.3.33
              ->1918 VXLAN RVTEP: 192.168.2.22
              ->1956 VXLAN RVTEP: 192.168.4.44
          ->2032
              satellite-device-id 100:
                  ->2031 sd-100/0/0.32770 label=4097
              satellite-device-id 101:
                  ->2077 sd-101/0/0.32770 label=4098
...
```

show ethernet-switching flood satellite (extensive view)

```
user@host> show ethernet-switching flood satellite extensive
```

```
VSwitch instance: default-switch
  ------------ Vlan: default ------------
    Flood route prefix       Token         Flags
    00.02.00.01.60.00.40/51  0x30002

When            Event                        Action
01:37:48.666    Processing Translate Q       Processing rte: op:1
                                             Deferring translation
01:37:46.117    Add to Translate Q           Orig: rte added to translate queue for op: 1
01:37:46.117    Route add                    Adding Orig route with nhid:1772
      Next-hop information:
        1772
          ->1771
              aggregation-device:
                  ->1708 et-0/0/30.0
```

```
    Flood route prefix       Token         Flags
    00.02.ff.fe.60.00.00/51  0x30000

When            Event                         Action
01:37:48.666    Processing Translate Q        Processing rte: op:1
                                              Deferring translation
01:37:46.117    Add to Translate Q            Orig: rte added to translate queue for op: 1
01:37:46.117    Route add                     Adding Orig route with nhid:1773
      Next-hop information:
        1773
          ->1771
              aggregation-device:
                  ->1708 et-0/0/30.0
  ------------ Vlan: VLAN800 ------------
    Flood route prefix       Token         Flags
    00.03.00.01.60.00.60/51  0x30003

When            Event                         Action
01:38:05.588    Kernel route updation         op:1, nh_id=1833, len=232
01:38:05.587    Route add                     Adding SAT route with nhid:1833
01:38:05.587    Processing Translate Q        Processing rte: op:1
01:38:05.587    Add to Translate Q            Orig: rte added to translate queue for op: 1
01:38:05.587    Route dependency             Child-cnhid:1833 --> rte:prefix:00.03.00.01.60.00.60/51
```

show ethernet-switching flood next-hops satellite

Syntax

show ethernet-switching flood next-hops satellite
<brief | detail | extensive>
<nexthop-id *nexthop-id*>

Release Information

Command introduced in Junos OS Release 17.2R1 for Junos Fusion Data Center.

Description

Display VLAN flood next- hop information for satellite device destinations.

You can use this command to:

- View the current list of all flood traffic composite next hops.
- See details about a specified composite next hop.
- Follow aggregation device composite next-hop processing as the aggregation device resolves and updates composite next-hop table entries for extended port destinations.

The aggregation device allocates ECID tags that represent multicast or broadcast destinations behind satellite device extended ports, associates them with the corresponding satellite device virtual interfaces (**sd-*fpc-id*/0/0**), and updates flood next-hop table entries accordingly. More detailed output from this command shows events that result in next-hop table updates.

Options

brief | detail | extensive—(Optional) Display the specified level of output. The default output level is **brief**.

nexthop-id *nexthop-id*—Display more detailed VLAN flooding next-hop information only for a specified next hop.

Required Privilege Level

view

Related Documentation

- Understanding Multicast Replication in a Junos Fusion on page 957
- Egress Multicast Replication on the Satellite Devices on page 963

List of Sample Output

Output Fields

Table 48 on page 981 lists the output fields for the **show ethernet-switching flood next-hops satellite** command. Output fields are listed in the approximate order in which they appear.

Table 48: show ethernet-switching flood next-hops satellite Command Output Fields

Field Name	Field Description	Level of Output
Next-hop ID	Next-hop ID for each next-hop entry displayed.	All
Composite function	Purpose of a composite next-hop entry. Values include: • FLOOD_ALL—Flood next hop. • FLOOD_ALL_SPLIT_HZ—Flood next hop including split-horizon information. • VXLAN_CORE_ENCAP—VXLAN encapsulation next hop for an aggregation device in a Junos Fusion Data Center with EVPN.	All
Table	Name of next-hop routing or forwarding table for the listed entry.	All
Flags	Flags giving additional information about a next-hop entry. Values include: • SAT—The entry is a satellite destination composite next hop for an extended port destination that has been resolved and updated with the corresponding satellite device interface, **sd-*fpc-id*/0/0**, and the associated ECID shown in the **label** field. • ST—The entry is stale and waiting to be refreshed. • RU—The entry is stale, but is marked to be reused. • VENH—The entry is a VXLAN encapsulation next hop for an aggregation device in a Junos Fusion Data Center with EVPN.	All
aggregation-device	Next-hop IDs and corresponding interfaces to reach local flood destination ports on the aggregation device.	detail extensive
satellite-device-id *id*	Satellite device ID with the next-hop IDs and interface names to reach extended ports that are flood destinations on the listed satellite device. When an ECID has been assigned to destination extended ports on a satellite device, this field lists the satellite next-hop ID, the corresponding virtual satellite device interface (**sd-*fpc-id*/0/0**), and the allocated ECID (**label** field).	detail extensive
label	ECID associated with a group of flood destination extended ports on the satellite device specified in the **satellite-device-id** field.	detail extensive
When	Elapsed time since an event related to a flood next-hop entry change.	extensive
Event	Brief description of the event related to a flood next-hop entry change.	extensive
Action	Brief description of actions that resulted from the event.	extensive

Sample Output

show ethernet-switching flood next-hops satellite

```
user@host> show ethernet-switching flood next-hops satellite
   Next-hop     Composite           Table                    Flags
   ID           function
   1771         FLOOD_ALL_SPLIT_HZ  vpls.6
   1772         FLOOD_ALL           vpls.6
   1773         FLOOD_ALL           vpls.6
   1779         FLOOD_ALL_SPLIT_HZ  vpls.6
   1780         FLOOD_ALL           vpls.6
   1781         FLOOD_ALL           vpls.6
   1832         FLOOD_ALL_SPLIT_HZ  vpls.6                   SAT
   1833         FLOOD_ALL           vpls.6                   SAT
   1834         FLOOD_ALL           vpls.6                   SAT
```

show ethernet-switching flood next-hops satellite (Junos Fusion Data Center with EVPN)

```
user@host> show ethernet-switching flood next-hops satellite
Next-hop     Composite           Table                    Flags
ID           function
1761         VXLAN_CORE_ENCAP    vpls.4
1897         FLOOD_ALL           vpls.4                   VENH
1898         FLOOD_ALL           vpls.4
1899         FLOOD_ALL           vpls.4                   VENH
1900         FLOOD_ALL           vpls.4
1901         FLOOD_ALL           vpls.4                   VENH
1902         FLOOD_ALL           vpls.4
1903         FLOOD_ALL           vpls.4                   VENH
1904         FLOOD_ALL           vpls.4
```

show ethernet-switching flood next-hops satellite (detail view)

```
user@host> show ethernet-switching flood next-hops satellite detail
Next-hop     Composite           Table                    Flags
 ID           function
 1758         FLOOD_ALL_SPLIT_HZ  vpls.6
     aggregation-device:
         ->1742 et-0/0/32.0
         ->1711 xe-0/0/28:0.0
     satellite-device-id 101:
         ->1768 ae0.0
     satellite-device-id 106:
         ->1768 ae0.0
     AE:
         ->1768 ae0.0
 1759         FLOOD_ALL           vpls.6
     ->1758
         aggregation-device:
             ->1742 et-0/0/32.0
             ->1711 xe-0/0/28:0.0
         satellite-device-id 101:
             ->1768 ae0.0
         satellite-device-id 106:
             ->1768 ae0.0
         AE:
             ->1768 ae0.0
 1760         FLOOD_ALL           vpls.6
```

```
    ->1758
        aggregation-device:
            ->1742 et-0/0/32.0
            ->1711 xe-0/0/28:0.0
        satellite-device-id 101:
            ->1768 ae0.0
        satellite-device-id 106:
            ->1768 ae0.0
        AE:
            ->1768 ae0.0
1777        FLOOD_ALL_SPLIT_HZ  vpls.6
    aggregation-device:
        ->1742 et-0/0/32.0
1778        FLOOD_ALL           vpls.6
    ->1777
        aggregation-device:
            ->1742 et-0/0/32.0
1779        FLOOD_ALL           vpls.6
    ->1777
        aggregation-device:
            ->1742 et-0/0/32.0
1783        FLOOD_ALL_SPLIT_HZ  vpls.6                  SAT
    aggregation-device:
        ->1742 et-0/0/32.0
        ->1711 xe-0/0/28:0.0
    satellite-device-id 101:
        ->1782 sd-101/0/0.32770 label=4099
    satellite-device-id 106:
        ->1784 sd-106/0/0.32770 label=4099
1785        FLOOD_ALL           vpls.6                  SAT
    ->1783
        aggregation-device:
            ->1742 et-0/0/32.0
            ->1711 xe-0/0/28:0.0
        satellite-device-id 101:
            ->1782 sd-101/0/0.32770 label=4099
        satellite-device-id 106:
            ->1784 sd-106/0/0.32770 label=4099
1786        FLOOD_ALL           vpls.6                  SAT
    ->1783
        aggregation-device:
            ->1742 et-0/0/32.0
            ->1711 xe-0/0/28:0.0
        satellite-device-id 101:
            ->1782 sd-101/0/0.32770 label=4099
        satellite-device-id 106:
            ->1784 sd-106/0/0.32770 label=4099
```

show ethernet-switching flood next-hops satellite nexthop-id (extensive view for specified next hop)

```
user@host> show bridge flood next-hops satellite nexthop-id 1415 extensive
Next-hop    Composite           Table                   Flags
ID          function
1415        FLOOD_ALL_SPLIT_HZ  default-switch          SAT
    satellite-device-id 100:
        ->612 sd-100/0/0.32770 label=4129
    satellite-device-id 103:
        ->1080 sd-103/0/0.32770 label=4116

When            Event                           Action
```

```
02:05:35.90 Kernel update                  op:2, cnh_id=0, len=712
02:05:35.90 Next-hop linking              Linked with nhid:962
02:05:35.90 Next-hop change                db entry change
                                           list[2]: {612 1080 }
2d 19:07:05.164 Next-hop linking           Linked with nhid:962
2d 19:07:05.164 KRT get                    nhid=1415
2d 19:07:05.164 Kernel update              op:8, cnh_id=0, len=712
2d 19:07:05.161 Next-hop linking           Linked with nhid:962
2d 19:07:05.161 Next-hop add               nhid not yet available
                                           list[1]: {1080 }
```

show ethernet-switching satellite device

Syntax

show ethernet-switching satellite device
<brief | detail>
<device-id *device-id*>

Release Information

Command introduced in Junos OS Release 17.2R1 for Junos Fusion Data Center.

Description

Display status and control information for all satellite devices or a specified satellite device.

Options

brief | detail—(Optional) Display the specified level of output. The default output level is **brief**.

device-id *device-id*—(Optional) Display information only for the specified satellite device.

Required Privilege Level

view

Related Documentation

- Understanding Multicast Replication in a Junos Fusion on page 957

List of Sample Output

show ethernet-switching satellite device on page 987
show ethernet-switching satellite device device-id (brief view for specified device) on page 987
show ethernet-switching satellite device device-id (detail view or specified device) on page 987

Output Fields

Table 49 on page 985 lists the output fields for the **show ethernet-switching satellite device** command. Output fields are listed in the approximate order in which they appear, although the display order varies between the different levels of output.

Table 49: show ethernet-switching satellite device Command Output Fields

Field Name	Field Description	Level of Output
Device ID **Device** (detail view)	Satellite device ID.	All
Interface Index **Device Interface Index** (detail view)	Internal ID for the satellite device virtual interface.	All

Table 49: show ethernet-switching satellite device Command Output Fields (continued)

Field Name	Field Description	Level of Output
Interface Name **Device Interface Name** (detail view)	Satellite device virtual interface name (**sd-*fpc-id*/0/0**, where *fpc-id* is the satellite device ID).	All
State **Device Interface State** (detail view)	State of the satellite device virtual interface. If the interface is created and active, possible values include **Up** or **Down**.	All
Connection State **Device connection Status** (detail view)	State of the satellite device interface connection to the aggregation device. The connection state is monitored using keep-alive messages between satellite and aggregation device control processes. Possible values include **Up** or **Down**.	All
Requests	Number of request messages sent to the listed satellite device aggregation device to allocate or update ECID mappings.	All
Responses	Number of response messages returned from the listed satellite device to the aggregation device for granting ECID requests.	All
Device connection uptime	Duration of the connection between the aggregation device and the specified satellite device.	detail
Device heartbeat status	Status of keep-alive message exchange between satellite device and aggregation device control processes.	detail
Echo packets sent	Number of keep-alive packets sent to the satellite device from the aggregation device.	detail
Echo packets received	Number of keep-alive response packets sent to the aggregation device from the satellite device.	detail
Multicast IPC stats	Number of inter-process control (IPC) messages sent from the aggregation device to the satellite device related to multicast functions on the satellite device. This value is displayed for active satellite device connections.	detail
Bridge IPC stats	Number of IPC messages sent from the aggregation device to the satellite device related to Layer 2 bridging functions on the satellite device. This value is displayed for active satellite device connections.	detail

Sample Output

show ethernet-switching satellite device

```
user@host> show ethernet-switching satellite device
Device    Interface  Interface                  Connection
ID        index      Name                State  State      Requests   Responses
100       370        sd-100/0/0.32770    Up     Up         5          5
101       342        sd-101/0/0.32770    Up     Up         4          4
102       365        sd-102/0/0.32770    Up     Up         3          3
105       364        sd-105/0/0.32770    Up     Up         2          2
```

show ethernet-switching satellite device device-id (brief view for specified device)

```
user@host> show ethernet-switching satellite device device-id 101
Device    Interface  Interface                  Connection
ID        index      Name                State  State
100       370        sd-100/0/0.32770    Up     Up
```

show ethernet-switching satellite device device-id (detail view or specified device)

```
user@host> show ethernet-switching satellite device device-id 101 detail
Device: 101
Device Interface Index: 3294
Device Interface Name: sd-101/0/0.32770
Device Interface State: Up
Device connection status: Up
Device connection uptime: 00:41:43
Device heartbeat status: Enabled
Echo packets sent: 41
Echo packets received: 41
Multicast IPC stats:
        ECID add sent: 0
        ECID update sent: 0
        ECID release sent: 0
        ECID cancel sent: 0
        ECID response received: 0
        Sync complete sent: 1
        Restart message sent: 0
        Restart complete message sent: 0
Bridge IPC stats:
        Bridge global messages sent: 1
        Bridge port add sent: 3
        Bridge port update sent: 0
        Bridge port delete sent: 0
        VLAN add sent: 60
        VLAN update sent: 0
        VLAN delete sent: 0
        VLAN member add sent: 60
        VLAN member update sent: 0
        VLAN member delete sent: 0
        VLAN member add received: 0
        VLAN member delete received: 0
        MAC prefix add sent: 0
        MAC prefix update sent: 0
        MAC prefix delete sent: 0
        MAC prefix add received: 0
```

```
MAC prefix delete received: 0
STP add sent: 3
STP update sent: 0
STP delete sent: 0
```

show multicast ecid-mapping satellite

Syntax

show multicast ecid-mapping satellite
<brief | detail | extensive>
<device-id *device-id*>
<ecid *ecid*>
<reference-id *reference-id*>

Release Information

Command introduced in Junos OS Release 16.1.
Command introduced in Junos OS Release 17.2R1 for Junos Fusion Data Center.

Description

Displays entries in the satellite multicast ECID mapping database.

ECID database entries map a group of extended ports to an ECID value for the satellite devices in a Junos Fusion. Each entry also records the next hop to reach the corresponding destination extended ports.

Options

brief | detail | extensive—(Optional) Display the specified level of output.

device-id *device-ID*—Display information from the ECID database for a specified satellite device ID.

ecid *ecid*—Display information from the ECID database for a specified ECID.

reference-id *reference ID*—Display information from the ECID database for a specified internally-assigned reference ID related to the ECID request messages exchanged during ECID allocation (used for troubleshooting issues with ECID allocation).

Required Privilege Level

view

Related Documentation

- Understanding Multicast Replication in a Junos Fusion on page 957
- Egress Multicast Replication on the Satellite Devices on page 963

List of Sample Output

show multicast ecid-mapping satellite on page 990
show multicast ecid-mapping satellite (for specified satellite device-id and ECID) on page 991

Output Fields

Table 50 on page 989 lists the output fields for the **show multicast ecid-mapping satellite** command. Output fields are listed in the approximate order in which they appear.

Table 50: show multicast ecid-mapping satellite Command Output Fields

Field Name	Field Description	Level of Output
Satellite Device ID	Satellite device ID.	All

Table 50: show multicast ecid-mapping satellite Command Output Fields (continued)

Field Name	Field Description	Level of Output
ECID	ECID assigned to a grouping of extended ports on the satellite device. Satellite devices have multiple ECIDs assigned that represent different groups of extended ports.	All
State	Status of requesting and allocating the ECID. Values include: • Init—An ECID mapping entry for a group of ports has been created. • Request Scheduled—An ECID mapping entry has been queued for an ECID value request. • Request Sent—The ECID request has been sent to the corresponding satellite device. • Response Received—An ECID value has been received from the satellite device. • Sync—An ECID mapping with an ECID value is to be synchronized with a satellite device. • Ready—An ECID next hop has been created and is ready to be referenced for forwarding.	All
Flags	Internal flag values for troubleshooting.	All
nhid	Satellite device next-hop ID associated with the ECID.	All
Reference ID	Internal reference ID assigned to an ECID request message, used for troubleshooting ECID communication with satellite devices.	All (with specified **device-id** or **ecid**)

Sample Output

show multicast ecid-mapping satellite

```
user@host> show multicast ecid-mapping satellite
Satellite   ECID        State                     Flags
Device ID
100         4129        Ready [nhid=612]          0x0
                 xe-100/0/6.0
                 xe-100/0/7.0
100         4097        Ready [nhid=1061]         0x0
                 xe-100/0/0.0
                 xe-100/0/1.0
100         4122        Ready [nhid=1190]         0x0
                 xe-100/0/2.0
                 xe-100/0/3.0
                 xe-100/0/4.0
                 xe-100/0/5.0
103         4103        Ready [nhid=1062]         0x0
                 xe-103/0/5.0
                 xe-103/0/6.0
103         4104        Ready [nhid=1068]         0x0
                 xe-103/0/7.0
```

```
                xe-103/0/8.0
103         4105        Ready [nhid=1069]         0x0
                xe-103/0/10.0
                xe-103/0/9.0
103         4106        Ready [nhid=1070]         0x0
                xe-103/0/11.0
                xe-103/0/12.0
103         4107        Ready [nhid=1071]         0x0
                xe-103/0/13.0
                xe-103/0/14.0
103         4109        Ready [nhid=1097]         0x0
                xe-103/0/15.0
                xe-103/0/16.0
103         4110        Ready [nhid=1074]         0x0
                xe-103/0/17.0
                xe-103/0/18.0
103         4111        Ready [nhid=1075]         0x0
                xe-103/0/19.0
                xe-103/0/20.0
103         4112        Ready [nhid=1076]         0x0
                xe-103/0/21.0
                xe-103/0/22.0
```

show multicast ecid-mapping satellite (for specified satellite device-id and ECID)

```
user@host> show multicast ecid-mapping satellite device-id 100 ecid 4101
Satellite   ECID        State                     Reference ID
  Device ID
  100         4101        Ready [nhid=1845]         14
```

show multicast next-hops satellite

Syntax show multicast next-hops satellite

Release Information Command introduced in Junos OS Release 16.1.
Command introduced in Junos OS Release 17.2R1 for Junos Fusion Data Center.

Description Display satellite multicast next-hop table information.

The output lists next-hops for all interfaces in the VPLS address family used in multicast replication.

Options **brief | detail**—(Optional) Output level is the same when either option or no option is specified.

Required Privilege Level view

Related Documentation
- Understanding Multicast Replication in a Junos Fusion on page 957
- **show multicast snooping next-hops satellite on page 995**

List of Sample Output **show multicast next-hops satellite on page 993**

Output Fields Table 51 on page 992 lists the output fields for the **show multicast next-hops satellite** command. Output fields are listed in the approximate order in which they appear, although the display order varies between the different levels of output.

Table 51: show multicast next-hops satellite Command Output Fields

Field Name	Field Description	Level of Output
Next-hop ID	Next-hop ID in the database.	All
Interface Index	Internal ID for a satellite device virtual interface.	All
Interface Name	Interface name for configured interfaces in the Junos Fusion. A satellite device virtual interface named **sd-*fpc-id*/0/0** is used to send traffic to extended ports on satellite device *fpc-id*.	All
Label	A multicast ECID assigned to the satellite device interface next hop. If no ECIDs are assigned for the interface, the value displayed in this field is 0. Satellite device interfaces might have multiple ECIDs listed that represent different groups of multicast destination extended ports on that satellite device.	All

Table 51: show multicast next-hops satellite Command Output Fields (continued)

Field Name	Field Description	Level of Output
Flags	Flags giving additional information about a next-hop entry. Values include: • SAT—The entry is a satellite composite next hop for extended port destinations that has been resolved and updated with the corresponding satellite device interface, **sd-*fpc-id*/0/0**, and the associated ECID shown in the **Label** field.	All

Sample Output

show multicast next-hops satellite

```
user@host> show multicast next-hops satellite
Next-hop     Interface    Interface
ID           index        Name                    Label   Flags
186          1            unknown                 0
530          323          unknown                 0
574          331          lc-0/0/0.32769          0
578          335          ge-0/0/4.32770          0
583          341          ge-0/0/7.32770          0
584          343          ge-0/0/8.32770          0
585          345          ge-0/0/9.32770          0
586          337          ge-0/0/5.32770          0
587          339          ge-0/0/6.32770          0
610          347          xe-100/0/6.0            0
611          349          xe-100/0/7.0            0
612          348          sd-100/0/0.32770        4129    SAT
618          350          xe-100/0/0.0            0
619          351          xe-100/0/1.0            0
620          352          xe-100/0/2.0            0
621          353          xe-100/0/3.0            0
622          354          xe-100/0/4.0            0
…
1061         348          sd-100/0/0.32770        4097    SAT
1062         346          sd-103/0/0.32770        4103    SAT
1068         346          sd-103/0/0.32770        4104    SAT
1069         346          sd-103/0/0.32770        4105    SAT
1070         346          sd-103/0/0.32770        4106    SAT
1071         346          sd-103/0/0.32770        4107    SAT
1074         346          sd-103/0/0.32770        4110    SAT
1075         346          sd-103/0/0.32770        4111    SAT
1076         346          sd-103/0/0.32770        4112    SAT
1077         346          sd-103/0/0.32770        4113    SAT
1078         346          sd-103/0/0.32770        4114    SAT
1079         346          sd-103/0/0.32770        4115    SAT
1080         346          sd-103/0/0.32770        4116    SAT
1081         346          sd-103/0/0.32770        4117    SAT
1082         346          sd-103/0/0.32770        4118    SAT
1085         346          sd-103/0/0.32770        4121    SAT
1097         346          sd-103/0/0.32770        4109    SAT
1189         346          sd-103/0/0.32770        4120    SAT
1190         348          sd-100/0/0.32770        4122    SAT
1363         433          ge-0/0/1.0              0
1364         434          ge-0/0/2.0              0
```

show multicast snooping next-hops satellite

Syntax

show multicast snooping next-hops satellite
<brief | detail | extensive>
<nexthop-id *nexthop-id*>

Release Information

Command introduced in Junos OS Release 16.1.
Command introduced in Junos OS Release 17.2R1 for Junos Fusion Data Center.

Description

Display detailed multicast next-hop information for satellite device destinations.

You can use this command to:

- View the current list of all multicast traffic next hops.
- See details about a specified multicast next hop.
- Follow aggregation device composite next-hop processing as the aggregation device resolves and updates multicast next-hop table entries for extended port destinations.

The aggregation device allocates ECID tags that represent multicast or broadcast destinations behind satellite device extended ports, associates them with the corresponding satellite device virtual interfaces (**sd-*fpc-id*/0/0**), and updates multicast next-hop table entries accordingly. More detailed output from this command shows events that result in next-hop table updates.

Options

brief | detail | extensive—(Optional) Display the specified level of output. The default output level is **brief**.

nexthop-id *nexthop-id*—Display more detailed multicast satellite next-hop information only for the specified next-hop ID.

Required Privilege Level

view

Related Documentation

- Understanding Multicast Replication in a Junos Fusion on page 957
- Egress Multicast Replication on the Satellite Devices on page 963
- **show multicast snooping route satellite on page 999**

List of Sample Output

show multicast snooping next-hops satellite on page 997
show multicast snooping next-hops satellite nexthop-id (detail view for a specified next-hop ID) on page 997
show multicast snooping next-hops satellite nexthop-id (extensive view for a specified next-hop ID) on page 997

Output Fields

Table 52 on page 996 lists the output fields for the **show ethernet-switching flood next-hops satellite** command. Output fields are listed in the approximate order in which they appear.

Table 52: show multicast snooping next-hops satellite Command Output Fields

Field Name	Field Description	Level of Output
Next-hop ID	Multicast next-hop ID (original multicast next hop used with ingress multicast replication).	All
Forwarding Next-Hop Type	Type of next-hop entry. Values include: • COMPOSITE—Composite next hop.	All
Table	Name of routing or forwarding table for the listed entry.	All
Flags	Flags giving additional information about a next-hop entry. Values include: • SAT—The entry is a satellite destination composite next hop for an extended port destination that has been resolved and updated with the corresponding satellite device interface, **sd-*fpc*/0/0**, and the associated ECID shown in the **label** field. • ST—The entry is stale and waiting to be refreshed. • RU—The entry is stale, but is marked to be reused.	All
Mrouter	Next-hop list for multicast routers connected to the bridge domain or VLAN.	detail extensive
aggregation-device	Next-hop IDs and corresponding interfaces for the composite next hop to reach local multicast destination ports on the aggregation device.	detail extensive
satellite-device-id *id*	Satellite device ID with the next-hop IDs and corresponding interface names for the composite next-hop chain to reach extended ports that are multicast destinations on that satellite device. When an ECID has been assigned to destination extended ports on a satellite device, this field lists the satellite next-hop ID, the corresponding virtual satellite device interface (**sd-*fpc-id*/0/0**), and the allocated ECID (**label** field).	detail extensive
AE	Link aggregation group interface next-hop IDs and interface names for multicast destination composite next hops.	detail extensive
label	ECID associated with one or more multicast destination extended ports on the satellite device in the **satellite-device-id** field.	detail extensive
Linked Next-hop	Multicast satellite next-hop ID (next hop used with egress multicast replication).	detail extensive
When	Elapsed time since an event related to a multicast next-hop entry change.	extensive

Table 52: show multicast snooping next-hops satellite Command Output Fields (continued)

Field Name	Field Description	Level of Output
Event	Brief description of the event related to a multicast next-hop entry change.	extensive
Action	Brief description of actions that resulted from the event.	extensive

Sample Output

show multicast snooping next-hops satellite

```
user@host> show multicast snooping next-hops satellite

Next-hop     Forwarding          Table                    Flags
ID           Next-Hop
             Type
2097265      COMPOSITE           inet.0
2097267      COMPOSITE           inet.0
2097270      COMPOSITE           inet.0
2097271      COMPOSITE           inet.0
2094267      COMPOSITE           inet.0                   SAT
```

show multicast snooping next-hops satellite nexthop-id (detail view for a specified next-hop ID)

```
user@host> show multicast snooping next-hops satellite nexthop-id 524296 detail
  Next-hop     Forwarding          Table                    Flags
  ID           Next-Hop
               Type
  524296       COMPOSITE           inet.0                   SAT
      satellite-device-id 106:
          ->1839 sd-106/0/0.32770 label=4104
      MRouter:
        524293
          aggregation-device:
              ->1708 et-0/0/30.0
              ->1826 xe-0/0/28:1.0
          satellite-device-id 100:
              ->1845 sd-100/0/0.32770 label=4101
          satellite-device-id 106:
              ->1847 sd-106/0/0.32770 label=4103
      Linked Next-hop: 524295
```

show multicast snooping next-hops satellite nexthop-id (extensive view for a specified next-hop ID)

```
user@host> show multicast snooping next-hops satellite nexthop-id 1048576 extensive

Next-hop     Forwarding          Table                    Flags
ID           Next-Hop
             Type
1048576      COMPOSITE           default
    satellite-device-id 100:
        ->54297 xe-100/0/12.0
        ->54299 xe-100/0/13.0
    satellite-device-id 101:
        ->54303 xe-101/0/12.0
```

```
        ->54339 xe-101/0/13.0
    Linked Next-hop: 1048578

When            Event                          Action
1w0d 21:07:51.281 Next-hop linking             Linked with satellite nhid:1048578
1w0d 21:07:51.260 Adding satellite Indirect    DB add
1w0d 21:07:51.260 Processing translate Q       Translating Multicast composite INH
                                               sd-100/0/0.32770 ECID:4105 [nhid=627]
                                               sd-101/0/0.32770 ECID:4104 [nhid=626]
1w0d 21:07:51.260 inh dependency               [ECID 4105] nhid:627 --> inhid:1048576
1w0d 21:07:51.260 inh dependency               [ECID 4104] nhid:626 --> inhid:1048576
1w0d 21:07:51.254 inh dependency               [ECID 4105] nhid:627 --> inhid:1048576
1w0d 21:07:51.254 Add to translate Q           inhid:1048576 added
1w0d 21:07:51.254 inh dependency               [ECID 4104] nhid:626 --> inhid:1048576
1w0d 21:07:51.241 Translate Q Skip             inhid:1048576: [ECID=0] Next-hop not ready
1w0d 21:07:51.241 Translate Q Skip             inhid:1048576: [ECID=0] Next-hop not ready
1w0d 21:07:51.241 Processing translate Q       Translating Multicast composite INH
1w0d 21:07:51.241 Add to translate Q           inhid:1048576 added
1w0d 21:07:51.241 Add to translate Q           Original INH decoded - Adding to Translate Q
1w0d 21:07:51.241 ECID reference               Added ECID reference-ID:2
1w0d 21:07:51.241 ECID reference               Added ECID reference-ID:1
1w0d 21:07:51.241 Next-hop add                 Linked to fwd CNH extension: 0xa67a200
                                               list[4]: {54297 54299 54303 54339 }
                                               nhid:1048576 from kernel
                                               fwd nhid[619]:
```

show multicast snooping route satellite

Syntax

show multicast snooping route satellite
<brief | detail | extensive>
<bridge-domain-name *bridge-domain-name* | <vlan-name *vlan-name*>
<group *group-address*>
<source *source-address*>
<vswitch-name *virtual-switch-name*>

Release Information

Command introduced in Junos OS Release 16.1.
Command introduced in Junos OS Release 17.2R1 for Junos Fusion Data Center.

Description

Display Layer 2 multicast routing information (with IGMP snooping) for destination ports on satellite devices.

This command lists multicast routing entries by route prefix and bridge domain name (Junos Fusion Provider Edge) or VLAN name (Junos Fusion Data Center). Each route entry lists the next-hop ID (**NH Index**) used when the aggregation device performs ingress multicast replication. When local replication is enabled and the VLAN has multicast destination extended ports on a satellite device, the aggregation device:

- Creates a satellite device next-hop chain to those multicast destinations through their corresponding satellite device.
- Updates the multicast route entry with a link to the satellite next-hop chain (**Linked NH Index**).

If a multicast route does not have a satellite next-hop chain, **Linked NH Index** is **0**. When the **Linked NH Index** value is non-zero, **NH Index** refers to the *original* next-hop information, but the aggregation device uses the satellite next-hop chain (**Linked NH Index**) for routing multicast traffic to satellite device extended ports. Use the **detail** or **extensive** option to expand the output to include details about the original next-hop and satellite next-hop chains.

Options

brief | detail | extensive—(Optional) Display the specified level of output. The default output level is **brief**. The **detail** output level expands the original and satellite device next-hop chains for each route displayed. The **extensive** output level includes details about multicast next-hop entry update events used mainly for troubleshooting.

bridge-domain-name *bridge-domain-name*—(Junos Fusion Provider Edge only) Filter output to display bridge domain flooding information only for the specified bridge domain name.

vlan-name *vlan-name*—(Junos Fusion Data Center only) Filter output to display VLAN flooding information only for the specified VLAN name.

group *group-address*—Filter output to display flooding information only for the specified multicast group.

source ***source-address***—Filter output to display flooding information only for the specified multicast source.

vswitch-name ***virtual-switch-name***—Filter output to display flooding information only for the specified Layer 2 virtual switch.

Required Privilege Level

view

Related Documentation

- Understanding Multicast Replication in a Junos Fusion on page 957
- Egress Multicast Replication on the Satellite Devices on page 963
- **show multicast snooping next-hops satellite on page 995**

List of Sample Output

show multicast snooping route satellite on page 1001
show multicast snooping route satellite detail on page 1002
show multicast snooping route satellite group on page 1003
show multicast snooping route satellite vlan-name (for specific VLAN on Junos Fusion Data Center) on page 1003
show multicast snooping route satellite bridge-domain-name (for specific bridge domain with detail view on Junos Fusion Provider Edge) on page 1003

Output Fields

Table 53 on page 1000 lists the output fields for the **show multicast snooping route satellite** command. Output fields are listed in the approximate order in which they appear.

Table 53: show multicast snooping route satellite Command Output Fields

Field Name	Field Description	Level of Output
Route	Multicast route information listed by route prefix under this heading.	All
(S, G/m)	Multicast entry state.	All
Bridge Domain	Bridge domain or VLAN name.	All
NH Index	Multicast next-hop ID (original multicast next hop used with ingress multicast replication).	brief
Linked NH Index	Multicast satellite next-hop ID (next hop used with egress multicast replication).	brief
Next-hop information	Detailed list of next-hop chain information for the original and satellite next-hop chains, listed by original next-hop index (**NH Index**) and satellite next-hop chain index (**Linked NH Index**) output field values.	detail extensive
Mrouter	Next-hop chain list for multicast routers connected to the bridge domain or VLAN.	detail extensive

Table 53: show multicast snooping route satellite Command Output Fields (continued)

Field Name	Field Description	Level of Output
aggregation-device	Next-hop IDs and corresponding interfaces for the composite next hop to reach local multicast destination ports on the aggregation device.	detail extensive
satellite-device-id *id*	Satellite device ID with the next-hop IDs and corresponding interface names for the composite next-hop chain to reach extended ports that are multicast destinations on that satellite device. When an ECID has been assigned to destination extended ports on a satellite device, this field lists the satellite next-hop ID, the corresponding virtual satellite device interface (**sd-*fpc-id*/0/0**), and the allocated ECID (**label** field).	detail extensive
AE	Link aggregation group interface next-hop IDs and interface names multicast destination composite next hops.	detail extensive
label	ECID associated with one or more multicast destination extended ports on the satellite device in the **satellite-device-id** field.	
When	Elapsed time since an event related to a multicast next-hop entry addition or update.	extensive
Event	Brief description of the event related to a multicast next-hop entry addition or update.	extensive
Action	Brief description of actions that resulted from the event.	extensive

Sample Output

show multicast snooping route satellite

```
user@host> show multicast snooping route satellite

-----VSwitch Instance: default-switch----
Route: 00.04.00.01.00.00.224.0.0.0.0.0.0.0.00.00/72
  (S, G/m): (*, 224.0.0.0/24)
    Bridge Domain:   bd100
    NH Index:        1048582
    Linked NH Index: 1048620
Route: 00.05.00.01.00.00.224.0.0.0.0.0.0.0.00.00/72
  (S, G/m): (*, 224.0.0.0/24)
    Bridge Domain:   bd1
    NH Index:        1048582
    Linked NH Index: 1048620
Route: 00.06.00.01.00.00.224.0.0.0.0.0.0.0.00.00/72
  (S, G/m): (*, 224.0.0.0/24)
    Bridge Domain:   bd10
    NH Index:        1048582
    Linked NH Index: 1048620
```

show multicast snooping route satellite detail

```
user@host> show multicast snooping route satellite detail

-----VSwitch Instance: default-switch----
  Route: 00.03.00.01.00.00.224.0.0.0.0.0.0.0.00.00/52
      (S, G/m): (*, 224.0.0.0/4)
       Bridge Domain: VLAN800
        Next-hop information:
          524287
            MRouter:
              524286
                aggregation-device:
                    ->1708 et-0/0/30.0
                    ->1826 xe-0/0/28:1.0
                satellite-device-id 100:
                    ->1838 xe-100/0/49:3.0
                satellite-device-id 106:
                    ->1834 xe-106/0/11.0
          524294
            MRouter:
              524293
                aggregation-device:
                    ->1708 et-0/0/30.0
                    ->1826 xe-0/0/28:1.0
                satellite-device-id 100:
                    ->1845 sd-100/0/0.32770 label=4101
                satellite-device-id 106:
                    ->1847 sd-106/0/0.32770 label=4103
  Route: 00.03.00.01.00.00.232.1.1.1.0.0.0.0.00.00/80
      (S, G/m): (*, 232.1.1.1/32)
       Bridge Domain: VLAN800
        Next-hop information:
          524295
            satellite-device-id 106:
                ->1804 xe-106/0/13.0
            MRouter:
              524286
                aggregation-device:
                    ->1708 et-0/0/30.0
                    ->1826 xe-0/0/28:1.0
                satellite-device-id 100:
                    ->1838 xe-100/0/49:3.0
                satellite-device-id 106:
                    ->1834 xe-106/0/11.0
          524296
            satellite-device-id 106:
                ->1839 sd-106/0/0.32770 label=4104
            MRouter:
              524293
                aggregation-device:
                    ->1708 et-0/0/30.0
                    ->1826 xe-0/0/28:1.0
                satellite-device-id 100:
                    ->1845 sd-100/0/0.32770 label=4101
                satellite-device-id 106:
                    ->1847 sd-106/0/0.32770 label=4103
```

show multicast snooping route satellite group

```
user@host> show multicast snooping route satellite group 225.0.0.1
-----VSwitch Instance: default-switch----
Route: 00.04.00.01.00.00.225.0.0.1.0.0.0.0.00.00/80
  (S, G/m): (*, 225.0.0.1/32)
    Bridge Domain:   bd100
    NH Index:        1048585
    Linked NH Index: 1048621
```

show multicast snooping route satellite vlan-name (for specific VLAN on Junos Fusion Data Center)

```
user@host> show multicast snooping route satellite vlan-name VLAN800 group 232.1.1.1
-----VSwitch Instance: default-switch----
  Route: 00.03.00.01.00.00.232.1.1.1.0.0.0.0.00.00/80
    (S, G/m): (*, 232.1.1.1/32)
      Bridge Domain:   VLAN800
      NH Index:        524295
      Linked NH Index: 524296
```

show multicast snooping route satellite bridge-domain-name (for specific bridge domain with detail view on Junos Fusion Provider Edge)

```
user@host> show multicast snooping route satellite bridge-domain-name bd100 group 225.0.0.1
detail
-----VSwitch Instance: default-switch----
Route: 00.04.00.01.00.00.225.0.0.1.0.0.0.0.00.00/80
    (S, G/m): (*, 225.0.0.1/32)
     Bridge Domain: bd100
      Next-hop information:
        1048576
          satellite-device-id 100:
              ->54297 xe-100/0/12.0
              ->54299 xe-100/0/13.0
          satellite-device-id 101:
              ->54303 xe-101/0/12.0
              ->54339 xe-101/0/13.0
        1048578
          satellite-device-id 100:
              ->627 sd-100/0/0.32770 label=4105
          satellite-device-id 101:
              ->626 sd-101/0/0.32770 label=4104
```

show multicast statistics satellite

Syntax show multicast statistics satellite
<brief | detail >

Release Information Command introduced in Junos OS Release 16.1.
Command introduced in Junos OS Release 17.2R1 for Junos Fusion Data Center.

Description Display statistics about multicast satellite routing tables and ECID management.

Options **brief | detail**—(Optional) Display the specified level of output. The default output level is **brief**.

Required Privilege Level view

Related Documentation
- Understanding Multicast Replication in a Junos Fusion on page 957

List of Sample Output show multicast statistics satellite on page 1004

Sample Output

show multicast statistics satellite

```
user@host> show multicast statistics satellite
Multicast Statistics:
    Number of flood route entries:            8000
    Number of satellite flood route entries:  8000
    Number of MCINET route entries:           44000
    Number of satellite MCINET route entries: 36000
    Unicast VPLS next-hops(non-satellite):    32
    Number of satellite ECID next-hops:       12
    Number of VPLS composite next-hops:       12000
    Number of satellite composite next-hops:  12000
    Number of Indirect next-hops:             28002
    Number of Satellite Indirect next-hops:   28001
    Number of ECIDs requested:                14
    Number of ECID responses received:        14
    Number of ECID delete messages:           2
    Number of ECID mapping entries in DB:     12
    Number of ECID mapping entries ready:     12
```


show multicast summary satellite

Syntax show multicast summary satellite

Release Information Command introduced in Junos OS Release 16.1.
Command introduced in Junos OS Release 17.2R1 for Junos Fusion Data Center.

Description Display summary status of multicast replication features in a Junos Fusion.

This command displays whether or not egress multicast replication (also called local replication) is enabled. When local replication is configured, this command displays **Egress replication: Enabled**, and **Egress replication: Disabled** otherwise.

This command also displays the graceful restart state of the satellite management control plane processes for local replication when these processes are first activated or have been restarted. The **Restart phase** output field value indicates the phase where the restart process stalled or failed, or displays a **Complete** message if the restart process completed successfully.

Options This command has no options.

Required Privilege Level view

Related Documentation

- Understanding Multicast Replication in a Junos Fusion on page 957
- Configuring Egress Replication on a Junos Fusion on page 967
- show multicast statistics satellite on page 1004

List of Sample Output show multicast summary satellite on page 1005

Sample Output

show multicast summary satellite

```
user@host>show multicast summary satellite
Multicast:
    Restart phase:      Complete (11/11)
    Egress replication: Enabled
```

CHAPTER 19

Port Mirroring Analyzers on Junos Fusion Data Center

Understanding Port Mirroring on a Junos Fusion Data Center

Port Mirroring Analyzers on a Junos Fusion Data Center Overview

You can use port mirroring (analyzers) on extended ports on satellite devices in a Junos Fusion Data Center. Extended-port port mirroring copies packets entering or exiting a port or entering a VLAN and sends the copies to a VLAN for remote monitoring. Use port mirroring to send traffic to applications that analyze traffic for purposes such as monitoring compliance, enforcing policies, detecting intrusions, monitoring and predicting traffic patterns, correlating events, and so on. When a port is ingress-mirrored, any packet received on that port is mirrored to the destination that you configure in your port mirroring configuration destination. When a port is egress-mirrored, any packet transmitted from that port is mirrored to your configured port-mirroring destination.

Many port mirroring analyzer concepts for standalone switches also apply to port mirroring analyzers on Junos Fusion Data Center. See *Understanding Port Mirroring* for information about port mirroring analyzers on standalone switches.

In Junos Fusion Data Center, you can use analyzers on extended ports for these purposes:

- Mirror aggregation device ports to extended ports
- Mirror extended ports to extended ports
- Mirror extended ports to aggregation device ports

Understanding the Configuration of Analyzers in a Junos Fusion Data Center

Like all features in a Junos Fusion Data Center, port mirroring analyzers are configured from the aggregation devices.

You use the same CLI commands to configure analyzers on a JFDC that you use to configure analyzers on a standalone switch. The following are configuration guidelines that are specific to analyzers on JFDC:

- Configure mirroring on logical ports, not physical ports.
- Configure an explicit firewall filter with a port-mirroring instance.
- Configure mirroring on any of the following:
  - Logical network ports
  - VLANs
  - LAGs
  - Extended ports
- Use either ports or VLANs as binding points for egress port/VLAN and ingress VLAN mirroring. Use firewall filters as binding points for ingress port mirroring.

  NOTE: **Binding points and the output port or VLAN can be in different satellite devices.**

- If mirrored traffic is to be sent to an output VLAN (an analyzer VLAN) and the output VLAN spans extended ports, configure the output VLAN with the following command:

  [edit]
  user@aggregation-device# set forwarding-options satellite analyzer-vlan *vlan-name*

  where ***vlan-name*** is the name of the output VLAN.

Limitations for Port Mirroring Analyzers on a Junos Fusion Data Center

Consider the following limitations when you configure port mirroring analyzers on a JFDC:

- You cannot mirror a cascade port. (See the configuration guidelines in *Understanding Port Mirroring* for other port types that cannot be mirrored.)
- The limitations of the native QFX10000 switch analyzer apply to analyzers on JFDC. See *Understanding Port Mirroring* for those limitations.
- Extended remote port mirroring—that is, remote port mirroring to an IP address (GRE encapsulation)—is not supported for JFDC.

- Ingress sampling on extended ports must be done with filters.
- If the output interface (or “monitor interface”) is on a satellite device, then it must be on the same VLAN and have the same port mode as the input interface (or “mirrored interface”).

Related Documentation
- *Understanding Port Mirroring*

analyzer-vlan (Remote Analyzer)

Syntax
analyzer-vlan *vlan-name*;

Hierarchy Level
[edit forwarding-options satellite]

Release Information
Statement introduced in Junos OS Release 17.2R1 for Junos Fusion Data Center.

Description
Specify the analyzer VLAN (output VLAN) that spans extended ports on the Junos Fusion Data Center.

Options
vlan-name—Name of the analyzer VLAN.

Required Privilege Level
admin—To view this statement in the configuration.
admin-control—To add this statement to the configuration.

Related Documentation
- Understanding Port Mirroring on a Junos Fusion Data Center on page 1007

satellite (Remote Analyzer)

Syntax
```
satellite {
  analyzer-vlan vlan-name;
}
```

Hierarchy Level
[edit forwarding-options]

Release Information
Statement introduced in Junos OS Release 17.2R1 for Junos Fusion Data Center.

Description
Specify that mirrored traffic is to be forwarded on all satellite devices that are connected to the aggregation device.

Required Privilege Level
admin—To view this statement in the configuration.
admin-control—To add this statement to the configuration.

Related Documentation
- Understanding Port Mirroring on a Junos Fusion Data Center on page 1007

CHAPTER 20

Remapping Uplink Traffic Flows on Junos Fusion Data Center

Understanding Remapping Uplink Traffic Flows on a Junos Fusion Data Center

On a Juniper Networks Junos Fusion Data Center, traffic flows are load-balanced by default through the 5-tuple hashing method. This type of load balancing might result in poor usage of network resources. You can configure uplink port pinning and flow-based

uplink selection to improve load balancing of traffic flows across uplink ports. You can use local port mirroring to troubleshoot and monitor applications.

Why 5-Tuple Hashing Might Not Be Enough

A traffic flow is a set of unidirectional packets that share the same 5-tuple packet fields that make up a Transmission Control Protocol/Internet Protocol (TCP/IP) connection. The packet fields include a source IP address/port number, destination IP address/port number and the IP protocol. Based on the contents of these packet fields, traffic flows are load-balanced in a best-effort manner with 5-tuple hashing. However, the unique characteristics of traffic flows in a network outstrip the best efforts of 5-tuple hashing to balance them efficiently.

Applications have varying requirements and constraints on network resources that create disparities in the size of flows. Elephant flows are long-lived flows with a high rate of traffic. They usually originate from applications that use big file transfers or multicast streaming, and they use advance-caching techniques to prevent the flows from being latency-sensitive. In contrast, a mice flow is a highly latency-sensitive and short-lived flow. While the majority of flows are mice flows, best-effort hashing cannot protect them from becoming starved for network resources when elephant flows are aggressively using network resources. Additionally, balancing flows with best-effort hashing can further degrade network performance when available links are underutilized.

To achieve better utilization of network resources, use remapping techniques to reroute, rate-limit, or prioritize elephant flows accordingly. Remapping elephant flows away from link bundles containing mice flows will prevent delays for latency-intensive mice flows and even out the distribution of flows among member links.

NOTE: **This topic does not include information regarding the detection of traffic flows in a Junos Fusion Data Center network.**

How Uplink Port Pinning Improves Load Balancing

Use the uplink port-pinning feature on a Junos Fusion Data Center to enable satellite devices to load-balance traffic across uplink ports according to ingress ports.

By changing the default mapping behavior, uplink port pinning:

- Improves uplink capacity
- Facilitates traffic isolation
- Creates better end-to-end forwarding performance

By default on a Junos Fusion Data Center platform, when the provisioning protocol detects the uplink ports connected to aggregation and satellite devices, all uplink ports are bundled into a single link aggregation group (LAG) for traffic distribution. Consequently, traffic received on a satellite device port is load-balanced on uplink ports across aggregation devices using 5-tuple hashing. Such mapping might not be suitable if traffic received on satellite device ports is not evenly distributed and only a few ports are receiving the majority of forwarded traffic.

With uplink port pinning, you create uplink groups on a satellite device and assign specific ports to the uplink group. When you create uplink groups, instead of all uplink ports being added to a single LAG during the provisioning phase, a LAG is created for each uplink group.

As well as creating uplink groups, you can map a set of ingress interfaces to a given uplink group. To do this, add a port pinning policy configuration under the satellite policy configuration to define the satellite downlink to uplink group mapping for traffic load-balancing purposes.

The same product types can share the same port-pinning policy configuration, as long as their satellite downlink to uplink group mapping is the same.

Uplink port-pinning can be applied to satellite devices in three ways:

- Global policy, where the policy is applied to all the satellite devices connected to the aggregate device.
- Model-based, where the policy is applied to all the satellite devices whose model number match the model number in the configured policy.
- FPC-based, where the policy is applied to certain satellite devices using an FPC number on the satellite device. Configure this option using the **set chassis satellite-management fpc *fpc-number* forwarding-policy *policy-name*** statement.

NOTE: **The port pinning-policy is configured from the aggregation device, so it is possible to get conflicting pinning policies from the aggregation device when it is in a transient state during configuration changes.**

How Flow-Based Uplink Selection Improves Load Balancing

On a Junos Fusion Data Center, you can configure flow-based uplink selection for satellite devices to achieve better utilization of network resources. As noted previously, elephant flows are long-lived flows with a high rate of traffic; the flows are low priority and not latency-sensitive. In a multitenant network in which satellite devices are hard-partitioned, programming the same flow entries on all satellite devices might not scale. Flow-based uplink selection enables you to program flow entries only on source satellite devices on which flows are expected. To remap specified elephant flows from satellite devices to aggregation devices, you can program remapping on all or specific satellite devices to override the default 5-tuple hashing and then distribute those specified flows across uplinks toward aggregation devices. You define specific flows by using flow-based firewall filters statements, and those flows are sent to the uplink port or ports that you define.

The definition of flows for uplink selection depends on the end-applications that are sharing the network resources. You use the satellite firewall filter configuration to specify flow action.

How Local Port Mirroring Is Used for Traffic Analysis and Monitoring

Junos Fusion Data Center supports local port mirroring. Port mirroring copies packets entering or exiting a port or entering a VLAN and sends the copies to a local interface for local monitoring. You can use local port mirroring to troubleshoot and monitor applications. You can mirror packets per port, and you can configure the source and mirror ports on the same satellite device.

Related Documentation

- Configuring Flow-Based Uplink Selection on a Junos Fusion Data Center on page 1016
- Configuring Local Port Mirroring for Satellite Devices on a Junos Fusion Data Center on page 1019
- Configuring Uplink Port Pinning for Satellite Devices on a Junos Fusion Data Center on page 1014

Configuring Uplink Port Pinning for Satellite Devices on a Junos Fusion Data Center

Junos Fusion Data Center supports uplink port pinning. Uplink port pinning lets you redistribute traffic received on satellite devices when the default 5-tuple hashing cannot adequately load-balance the flows.

A satellite device might have a few ports receiving the majority of forwarding traffic. In such cases, the uplink port pinning feature will override the default load balancing and define flow mapping that will yield better link utilization of uplink capacity, traffic isolation, and better end-to-end forwarding performance.

NOTE: **All configuration tasks for satellite devices are done on an aggregation device.**

To configure uplink port pinning for a satellite device:

1. Specify a policy for satellite devices without a specific product model.

   ```
   [edit]
   user@aggregation-device# set policy-options satellite-policies forwarding-policy
     policy-name port-group-extended extended-port-group-name port-group-uplink
     -port-group-uplink-name
   ```

   For example, the forwarding policy **policy-1** is applied to the extended port group **ep1** and the uplink port group **up1**.

   ```
   [edit]
   user@aggregation-device# set policy-options satellite-policies forwarding-policy
     policy-1 port-group-extended ep1 port-group-uplink up1
   ```

2. Specify a policy for satellite devices with a specific product model using the **term** statement.

```
[edit]
user@aggregation-device# set policy-options satellite-policies forwarding-policy
  policy-name term from product-model product-model-name port-group-extended
  extended-port-group-name port-group-uplink port-group-uplink-name
```

For example, the forwarding policy **policy-1** is applied to the extended port group **ep1** and the uplink port group **up2** on all QFX5100 satellite devices.

```
[edit]
user@aggregation-device# set policy-options satellite-policies forwarding-policy
  monitor-traffic product-model QFX5100* port-group-extended ep1 mirror-ingress
  port-group-uplink up2
```

3. Specify ports for the uplink port groups and the extended port groups:

```
[edit]
user@aggregation-device# set policy-options satellite-policies port-group-alias
  alias-name pic pic-number port [list-of-port-numbers]
```

For example:

```
[edit]
  user@aggregation-device# set policy-options satellite-policies port-group-alias ep1
    pic 0 port [10 20]
  user@aggregation-device# set policy-options satellite-policies port-group-alias up1
    pic 0 port 24
user@aggregation-device# set policy-options satellite-policies port-group-alias up2
  pic 0 port 22
```

4. Add the forwarding policy to the chassis configuration. Optionally, include the FPC identifier for a particular satellite device:

```
[edit]
user@aggregation-device# set chassis satellite-management fpc slot-id
  forwarding-policy policy-name
```

For example:

```
[edit]
user@aggregation-device# set chassis satellite-management fpc 102 forwarding-policy
  monitor-traffic
```

Related Documentation

- Configuring Flow-Based Uplink Selection on a Junos Fusion Data Center on page 1016
- Configuring Local Port Mirroring for Satellite Devices on a Junos Fusion Data Center on page 1019
- Understanding Remapping Uplink Traffic Flows on a Junos Fusion Data Center on page 1011

Configuring Flow-Based Uplink Selection on a Junos Fusion Data Center

You can configure flow-based uplink selection for satellite devices to achieve better utilization of network resources on a Junos Fusion Data Center (JFDC)—that is, you remap specified *elephant flows* from satellite devices to aggregation devices. (See "Understanding Remapping Uplink Traffic Flows on a Junos Fusion Data Center" on page 1011 for information about elephant flows.)

You program remapping of the uplink traffic on all or specific satellite devices to:

- Override the default 5-tuple hashing
- Distribute those specified flows across uplinks toward aggregation devices

You define specific traffic flows for uplink selection using flow-based filters, and then direct those traffic flows to a specific uplink port group. Starting in Junos OS Release 17.4R1, you can also direct uplink traffic flows to a specific chassis group.

The flow-based filter is a firewall filter with two components: flow definition and action. To configure the flow definition, you identify the traffic flows for uplink selection using match conditions. Your definition of a flow will depend on the end-applications that share network resources. The flow definition might be as granular as 5-tuple or as simple as vlan/src-mac. See Table 54 on page 1018 for supported packet fields and match conditions.

To configure the filter action, you direct those flows to use a specified uplink port group or chassis group as the next hop. You define the uplink port group or chassis group for the next hop by using the **port-group-alias** stanza under **satellite-policies**. The uplink selection policy is a generic model that represents uplink ports on a variety of satellite devices.

You can enable uplink selection only on a set of ingress ports on a satellite device by using the **port-group-extended** configuration statement. To configure uplink selection on all extended ports, specify **port-group-extended all** (that is, supply the keyword **all** instead of providing a port-group name).

To configure flow-based uplink selection:

1. Define an alias for the extended ports on the satellite device on which uplink selection will be applied:

   [edit]
   user@aggregation-device# **set policy-options satellite-policies** port-group-alias *extended-port-group-name* pic *pic-number* port [*list-of-port-numbers*]

   For example:

   [edit]
   user@aggregation-device# **set policy-options satellite-policies port-group-alias eg1 pic 0 port [10 20]**

2. Define an alias for the uplink port group or chassis group to which the uplink traffic flows will be directed:

   - To define an uplink port group alias:

     ```
     [edit]
     user@aggregation-device# set policy-options satellite-policies port-group-alias
       uplink-port-group-name pic pic-number port [list-of-port-numbers]
     ```

     For example:

     ```
     [edit]
     user@aggregation-device# set policy-options satellite-policies port-group-alias
       ug1 pic 0 port [0 1]
     ```

   - To define a chassis group alias:

     ```
     [edit]
     user@aggregation-device# set policy-options satellite-policies chassis-group-alias
       chassis-group-name chassis-id id
     ```

     For example:

     ```
     [edit]
     user@aggregation-device# set policy-options satellite-policies chassis-group-alias
       c1 chassis-id 1 mode primary
     [edit]
     user@aggregation-device# set policy-options satellite-policies chassis-group-alias
       c1 chassis-id 2 mode backup
     ```

3. Configure a firewall filter and provide the alias of an uplink port group or chassis group as the next-hop group:

   - Specify **ethernet-switching** as the filter family.
   - See Table 54 on page 1018 for supported packet fields and match conditions.

     ```
     [edit]
     user@aggregation-device# set chassis satellite-management firewall family
       family-name filter filter-name term term-name from match-condition then
       next-hop-group (uplink-port-group-name | chassis-group-name)
     ```

     For example:

     ```
     [edit]
     user@aggregation-device# set chassis satellite-management firewall family
       ethernet-switching filter ftp-flows term t1 from ip-protocol ftp then next-hop-group
       ug1
     ```

4. Configure a forwarding policy that applies the firewall filter to the extended port group. Optionally, specify a product model for the satellite devices on which the policy is applied:

   ```
   [edit]
   user@aggregation-device# set policy-options satellite-policies forwarding-policy
     policy-name product-model product-model-name port-group-extended
     extended-port-group-name filter filter-name
   ```

   For example:

```
[edit]
user@aggregation-device# set policy-options satellite-policies forwarding-policy
  elephant-flow-uplink-selection product-model QFX5100* port-group-extended eg1
  filter ftp-flows
```

5. Bind the forwarding policy to all satellite devices or to a specific satellite device:

   To bind the forwarding policy to *all* satellite devices:

   ```
   [edit]
   user@aggregation-device# set chassis satellite-management forwarding-policy
     policy-name
   ```

   For example:

   ```
   [edit]
   user@aggregation-device# set chassis satellite-management forwarding-policy
     elephant-flow-uplink-selection
   ```

   To bind the forwarding policy to a *specific* satellite device:

   ```
   [edit]
   user@aggregation-device# set chassis satellite-management fpc fpc-id
     forwarding-policy policy-name
   ```

   For example:

   ```
   [edit]
   user@aggregation-device# set chassis satellite-management fpc 110 forwarding-policy
     elephant-flow-uplink-selection
   ```

Table 54: Packet Fields and Match Conditions Supported for Flow-based Uplink Selection

Packet Fields	Match Conditions
destination-mac	destination-mac-address *address*
ip-destination-address	ip-destination-address *address*
ip-l4-protocol	ip-protocol *number*
ip-source-address	ip-source-address *address*
l4-destination-port (TCP/UDP)	destination-port *number*
l4-source-port (TCP/UDP)	source-port *number*
source-mac	source-mac-address *address*
vlan-id	user-vlan-id *number*

For details about the match conditions, see *Firewall Filter Match Conditions and Actions for QFX10000 Switches*.

Release History Table

Release	Description
17.4R1	Starting in Junos OS Release 17.4R1, you can also direct uplink traffic flows to a specific chassis group.

Related Documentation

- Configuring Local Port Mirroring for Satellite Devices on a Junos Fusion Data Center on page 1019
- Understanding Remapping Uplink Traffic Flows on a Junos Fusion Data Center on page 1011

Configuring Local Port Mirroring for Satellite Devices on a Junos Fusion Data Center

Junos Fusion Data Center supports local port mirroring. Port mirroring copies packets entering or exiting a port or entering a VLAN and sends the copies to a local interface for local monitoring. You can use local port mirroring to troubleshoot and monitor applications. You can mirror packets per port, and you can configure the source and mirror ports on the same satellite device.

To configure local port mirroring on a satellite device:

1. Add the forwarding policy to the chassis configuration. Optionally, include the FPC identifier for a particular satellite device:

   ```
   [edit]
   user@aggregation-device# set chassis satellite-management fpc slot-id
     forwarding-policy policy-name
   ```

   For example:

   ```
   [edit]
   user@aggregation-device# set chassis satellite-management fpc 102 forwarding-policy
     my-pol102
   ```

2. Specify the mirror port group for the extended port group. Optionally, specify a product model for the satellite devices on which the policy is applied:

   NOTE: You can configure both ingress and egress or just one of the two.

   ```
   [edit]
   user@aggregation-device# set policy-options satellite-policies forwarding-policy
     policy-name product-model product-model-name port-group-extended
     extended-port-group-name mirror-egress port-group-mirror mirror-port-group-name
     mirror-ingress port-group-mirror mirror-port-group-name
   ```

   For example:

   ```
   [edit]
   user@aggregation-device# set policy-options satellite-policies forwarding-policy
     monitor-traffic product-model QFX5100* port-group-extended eg1 mirror-egress
     port-group-mirror mp1 mirror-ingress port-group-mirror mg1
   ```

3. Specify port(s) for the mirroring port group(s) and the extended port group(s):

   ```
   [edit]
   user@aggregation-device# set policy-options satellite-policies port-group-alias
     alias-name pic pic-number port [list-of-port-numbers]
   ```

   For example:

   ```
   [edit]
     user@aggregation-device# set policy-options satellite-policies port-group-alias
       mg1 pic 0 port 24
   user@aggregation-device# set policy-options satellite-policies port-group-alias eg1
     pic 0 port [10 20]
   ```

4. Bind the extended-port forwarding policy to all satellite devices or to a specific satellite device:

   To bind the forwarding policy to *all* satellite devices:

   ```
   [edit]
   user@aggregation-device# set chassis satellite-management forwarding-policy
     policy-name
   ```

   For example:

   ```
   [edit]
   user@aggregation-device# set chassis satellite-management forwarding-policy
     monitor-traffic
   ```

   To bind the forwarding policy to a *specific* satellite device:

   ```
   [edit]
   user@aggregation-device# set chassis satellite-management fpc slot-id
     forwarding-policy policy-name
   ```

   For example:

   ```
   [edit]
   user@aggregation-device# set chassis satellite-management fpc 110 forwarding-policy
     monitor-traffic
   ```

Related Documentation

- Understanding Remapping Uplink Traffic Flows on a Junos Fusion Data Center on page 1011

chassis-group-alias

Syntax

```
chassis-group-alias chassis-group-alias-name {
  chassis-id id-number {
    core-interfaces [list-of-interfaces];
    mode primary/backup;
  }
}
```

Hierarchy Level

[edit policy-options satellite-policies]

Release Information

Statement introduced in Junos OS Release 18.1R2 for Junos Fusion Data Center.

Description

Configure a chassis group alias for flow-based uplink selection in a Junos Fusion. You can configure flow-based uplink selection for satellite devices to achieve better utilization of network resources by remapping specified uplink traffic flows on the satellite device.

When configuring flow-based uplink selection, there are two ways to select the uplink ports towards: using an uplink port group or using a chassis group. The uplink traffic flows, which are defined using a firewall filter, are directed towards the uplink port group or the chassis group.

To configure the chassis group, you assign an alias to a group of chassis IDs. The chassis group alias is then used in the firewall filter configuration as the next-hop group for the uplink traffic flows. You configure the firewall filter at the [**edit chassis satellite-management firewall**] hierarchy level.

You can configure primary and backup chassis groups for uplink traffic flows. Uplink interfaces for the chassis group configured as primary will be the first selected for uplink traffic flows. When connectivity to the primary chassis group is down, the uplink traffic flows will be directed to the backup chassis group. When connectivity to the primary chassis group is restored, the uplink traffic flows won't switch back to the primary chassis group until connectivity to the backup chassis group is lost.

You can also configure a list of core interfaces for the chassis group. The core interfaces are native ports on the aggregation device. The uplink traffic flows are directed to the chassis group when at least one of the core interfaces is up. If all of the core interfaces are down, then the firewall filter is disabled.

Default

If flow-based uplink selection is not configured, traffic flows are load-balanced by default through the 5-tuple hashing method.

Options

chassis-group-alias-name—The user-defined name of the chassis group.

chassis-id *id-number*—The chassis ID found in **set chassis satellite-management redundancy-groups chassis-id *id-number*** on the aggregation device.

primary—Configure the chassis group to be in primary mode. Must be configured along with a backup chassis group using the **backup** option.

backup—Configure the chassis group to be in backup mode. If connectivity to the primary chassis group is down, uplink traffic flows are directed to the backup chassis group. Must be configured along with a primary chassis group using the **primary** option.

core-interfaces ***list-of-interfaces***—Configure the core interfaces for the chassis group so that uplink traffic is directed to the chassis group as long as one of the core interfaces is up.

Required Privilege Level
admin—To view this statement in the configuration.
admin-control—To add this statement to the configuration.

Related Documentation
- Configuring Flow-Based Uplink Selection on a Junos Fusion Data Center on page 1016

filter

Syntax
filter *filter-name*;

Hierarchy Level
[edit chassis satellite-management firewall family *family-name*],
[edit policy-options satellite-policies forwarding-policy *policy-name* term *term-name* fromproduct-model *model-name* port-group-extended *name*],
[edit policy-options satellite-policies forwarding-policy *policy-name* port-group-extended *name*]

Release Information
Statement introduced in Junos OS Release 17.2R1 for Junos Fusion.

Description
On a Junos Fusion Data Center (JFDC), assign a filter for uplink selection for use with satellite policy configurations.

Options
name—Filter name.

Required Privilege Level
admin—To view this statement in the configuration.
admin-control—To add this statement to the configuration.

Related Documentation
- Configuring Flow-Based Uplink Selection on a Junos Fusion Data Center on page 1016
- Configuring Local Port Mirroring for Satellite Devices on a Junos Fusion Data Center on page 1019
- Configuring Uplink Port Pinning for Satellite Devices on a Junos Fusion Data Center on page 1014

forwarding-policy

Syntax

```
forwarding-policy {
  policy-name {
    term term-name {
      from {
        product-model model-name;
        port-group-extended port-group-extended-name {
          filter filter-name;
          mirror-egress port-group-mirror port-group-mirror;
          mirror-ingressport-group-mirror port-group-mirror,
          port-group-uplink port-group-uplnk-name
            holddowntime;
            minimum-links number;
        }
      }
    }
  }
}
```

Hierarchy Level

[edit policy-options satellite-policies]

Release Information

Statement introduced in Junos OS Release 17.2R1 for Junos Fusion.

Description

Configure forwarding satellite policies for Junos Fusion.

The remaining statements are explained separately.

Required Privilege Level

routing—To view this statement in the configuration.
routing—To add this statement to the configuration.

Related Documentation

- *Configuring Junos Fusion Provider Edge*
- *Configuring or Expanding a Junos Fusion Enterprise*
- Configuring Flow-Based Uplink Selection on a Junos Fusion Data Center on page 1016
- Configuring Local Port Mirroring for Satellite Devices on a Junos Fusion Data Center on page 1019
- Configuring Uplink Port Pinning for Satellite Devices on a Junos Fusion Data Center on page 1014
- Understanding Remapping Uplink Traffic Flows on a Junos Fusion Data Center on page 1011

fpc (Junos Fusion)

Syntax

```
fpc slot-id{
   alias alias;
   cascade-ports interface-name;
   description description;
   environment-monitoring-policy policy;
   serial-numberserial-number;
   system-id mac-address;
   uplink-failure-detection {
      candidate-uplink-policy policy;
   }
   local switching;
   selective-vlan-switching{
      routing-instance routing-instance;
   }
}
```

Hierarchy Level

[edit chassis satellite-management]

Release Information

Statement introduced in Junos OS Release 14.2R3 for Junos Fusion Provider Edge.
Statement introduced in Junos OS Release 16.1R1 for Junos Fusion Enterprise.
Statement introduced in Junos OS Release 17.2R1 for Junos Fusion Data Center.
local-switching and **selective-vlan-switching** introduced in Junos OS Release 17.2R1 for Junos Fusion Provider Edge.

Description

Configure an FPC identifier for a satellite device within a Junos Fusion, or modify the configuration of an existing satellite device in a Junos Fusion.

Options

slot-id—Specifies the FPC identifier of the device and functions as the FPC identifier in the interface name when configuring satellite device interfaces.

In a Junos Fusion Data Center, the *slot-id* must have a value in the range of 65 to 254.

In a Junos Fusion Enterprise or Junos Fusion Provider Edge, the *slot-id* must have a value of 34 or greater.

local switching—Enables local-switching for all the ports on the satellite device.

The remaining statements are explained separately.

Required Privilege Level

admin—To view this statement in the configuration.
admin-control—To add this statement to the configuration.

Related Documentation

- *Configuring Junos Fusion Provider Edge*
- *Configuring or Expanding a Junos Fusion Enterprise*

holddown (satellite-policies)

Syntax holddown *time*;

Hierarchy Level [edit policy-options satellite-policies forwarding-policy *name* port-group-extended *port-group-extended-name* port-group-uplink *port-group-uplink-name*]
[edit policy-options satellite-policies forwarding-policy *policy-name* term *name* fromport-group-extended *port-group-extended-name*port-group-uplink *port-group-uplink-name*]

Release Information Statement introduced in Junos OS Release 17.2R for Junos Fusion.

Description On a Junos Fusion Data Center for satellite policy configurations, define the amount of time to hold down after uplink failure.

Options ***time***—Time in seconds. The range is from 1 through 600 seconds.

Required Privilege Level routing—To view this statement in the configuration.
routing—To add this statement to the configuration.

Related Documentation

- *Configuring Junos Fusion Provider Edge*
- *Configuring or Expanding a Junos Fusion Enterprise*
- Configuring Flow-Based Uplink Selection on a Junos Fusion Data Center on page 1016
- Configuring Local Port Mirroring for Satellite Devices on a Junos Fusion Data Center on page 1019
- Understanding Remapping Uplink Traffic Flows on a Junos Fusion Data Center on page 1011

minimum-links (satellite-policies)

Syntax minimum-links *number*;

Hierarchy Level [edit policy-options satellite-policies forwarding-policy *name* port-group-extended *port-group-extended-name* port-group-uplink *port-group-uplink-name*]
[edit policy-options satellite-policies forwarding-policy *policy-name* term *name* fromport-group-extended *port-group-extended-name*port-group-uplink *port-group-uplink-name*]

Release Information Statement introduced in Junos OS Release 17.2R1 for Junos Fusion.

Description On a Junos Fusion Data Center for satellite policy configurations, define the minimum number of child links required to keep extended ports UP.

Options **number**—Number of minimum child links. The range is from 1 through 32 links.

Required Privilege Level routing—To view this statement in the configuration.
routing—To add this statement to the configuration.

Related Documentation

- Understanding Remapping Uplink Traffic Flows on a Junos Fusion Data Center on page 1011
- *Configuring Junos Fusion Provider Edge*
- *Configuring or Expanding a Junos Fusion Enterprise*
- Configuring Flow-Based Uplink Selection on a Junos Fusion Data Center on page 1016
- Configuring Local Port Mirroring for Satellite Devices on a Junos Fusion Data Center on page 1019

mirror-egress

Syntax

```
mirror-egress {
   port-group-mirror port-group-mirror;
}
```

Hierarchy Level

[edit policy-options satellite-policies forwarding-policy *name* port-group-extended *name*],
[edit policy-options satellite-policies forwarding-policy *name* term *name* from
port-group-extended *name*]

Release Information

Statement introduced in Junos OS Release 17.2R1 for Junos Fusion Data Center (JFDC).

Description

Define an egress port mirror for local port mirroring on a satellite device.

Options

The remaining statement is explained separately.

Required Privilege Level

routing

Related Documentation

- Configuring Local Port Mirroring for Satellite Devices on a Junos Fusion Data Center on page 1019

mirror-ingress

Syntax

```
mirror-ingress {
   port-group-mirrorport-group-mirror;
}
```

Hierarchy Level

[edit policy-options satellite-policies forwarding-policy *name* port-group-extended *name*],
[edit policy-options satellite-policies forwarding-policy *name* term *name* from
port-group-extended *name*]

Release Information

Statement introduced in Junos OS Release 17.2R1 for Junos Fusion Data Center (JFDC).

Description

Define an ingress port mirror for local port mirroring on a satellite device.

Options

The remaining statement is explained separately.

Required Privilege Level

routing

Related Documentation

- Configuring Local Port Mirroring for Satellite Devices on a Junos Fusion Data Center on page 1019

port-group-alias (satellite-policies)

Syntax

```
port-group-alias port-group-alias-name {
  pic pic-number {
    port [port-number | port-number-range | all];
  }
}
```

Hierarchy Level

[edit policy-options satellite-policies]

Release Information

Statement introduced in Junos OS Release 14.2R3.

Description

Configure a port group alias for satellite policies in a Junos Fusion.

A port group alias is used to define the candidate uplink ports on satellite devices that use the satellite policy.

CAUTION: **The physically connected uplink ports on a satellite device must be defined as candidate uplink ports in the Junos Fusion configuration. If the uplink ports on a satellite device are not configured as candidate uplink ports, uplink failure detection cannot be enabled on the device, and a system log message is generated.**

A port group alias is associated with a satellite policy using the **set uplink-port-group *uplink-port-group-name*** statement in the [**edit policy-options satellite-policies candidate-uplink-policy *policy-name***] hierarchy.

Default

Each satellite device model has a set of default uplink ports (see "Overview of Uplink Failure Detection on a Junos Fusion" on page 1049). You only need to assign an uplink port group to a satellite device if you do not want to use the default uplink ports.

Options

port-group-alias-name—The user-defined name of the port group alias.

The remaining statements are explained separately.

Required Privilege Level

admin—To view this statement in the configuration.
admin-control—To add this statement to the configuration.

Related Documentation

- *Configuring Junos Fusion Provider Edge*
- *Configuring or Expanding a Junos Fusion Enterprise*

port-group-extended

Syntax

```
port-group-extended name;
  filter filter-name;
  mirror-egress port-group-mirror port-group-mirror;
  mirror-ingressport-group-mirror port-group-mirror,
port-group-uplink holddown seconds minimum-links minimum-links
  port-group-uplink-alias-name;
```

Hierarchy Level

[edit policy-options satellite-policies forwarding-policy *policy-name* term *term-name* fromproduct-model *model-name*],
[edit policy-options satellite-policies forwarding-policy *policy-name*]

Release Information

Statement introduced in Junos OS Release 17.2R1 for Junos Fusion.

Description

On a Junos Fusion Data Center (JFDC), define the satellite device extended port group for use with satellite policy configurations.

In a JFDC environment, extended ports are access ports on satellite devices that connect to end user devices (such as laptops, phones, and printers).

Options

name—Extended port group alias name to which the policy applies.

The remaining statements are explained separately.

Required Privilege Level

admin—To view this statement in the configuration.
admin-control—To add this statement to the configuration.

Related Documentation

- Configuring Flow-Based Uplink Selection on a Junos Fusion Data Center on page 1016
- Configuring Local Port Mirroring for Satellite Devices on a Junos Fusion Data Center on page 1019
- Configuring Uplink Port Pinning for Satellite Devices on a Junos Fusion Data Center on page 1014

port-group-mirror

Syntax port-group-mirror *port-group-mirror*;

Hierarchy Level
[edit policy-options satellite-policies forwarding-policy *name* port-group-extended *name* mirror-egress],
[edit policy-options satellite-policies forwarding-policy *name* term *name* from port-group-extended *name* mirror-egress],
[edit policy-options satellite-policies forwarding-policy *name* port-group-extended *name* mirror-ingress],
[edit policy-options satellite-policies forwarding-policy *name* term *name* from port-group-extended *name* mirror-ingress]

Release Information Statement introduced in Junos OS Release 17.2R1 for Junos Fusion Data Center (JFDC).

Description Specify the mirror port group alias name for local port mirroring on a satellite device.

Required Privilege Level routing

Related Documentation
- Configuring Local Port Mirroring for Satellite Devices on a Junos Fusion Data Center on page 1019

port-group-uplink (satellite-policies)

Syntax

port-group-uplink *port-group-uplnk-name*
  holddown*time*;
  minimum-links *number*;

Hierarchy Level

[edit policy-options satellite-policies forwarding-policy *policy-name* term *term-name*
  fromproduct-model *model-name*]
[edit policy-options satellite-policies forwarding-policy *name* port-group-extended
  port-group-extended-name]
[edit policy-options satellite-policies forwarding-policy *policy-name* term *name*
  fromport-group-extended *port-group-extended-name*]

Release Information

Statement introduced in Junos OS Release 17.2R1 for Junos Fusion.

Description

On a Junos Fusion Data Center, define an uplink port mapping for satellite policy configurations.

Options

name—Name of the uplink port group.

The remaining statements are explained separately.

Required Privilege Level

routing—To view this statement in the configuration.
routing—To add this statement to the configuration.

Related Documentation

- *Configuring Junos Fusion Provider Edge*
- *Configuring or Expanding a Junos Fusion Enterprise*
- Configuring Flow-Based Uplink Selection on a Junos Fusion Data Center on page 1016
- Configuring Local Port Mirroring for Satellite Devices on a Junos Fusion Data Center on page 1019
- Understanding Remapping Uplink Traffic Flows on a Junos Fusion Data Center on page 1011

product-model (Junos Fusion)

Syntax product-model *model-name*;

Hierarchy Level [edit policy-options satellite-policies candidate-uplink–port-policy *policy-name* term *term-name* from]
[edit policy-options satellite-policies candidate-uplink–port-policy *policy-name* term *term-name* from]
[edit policy-options satellite-policies forwarding-policy *policy-name* term *term-name* from]

Release Information Statement introduced in Junos OS Release 14.2R3.

Description Define the satellite device product models that will use the candidate uplink port policy defined in the **from** statement.

The other statements in the same **from** statement are applied to satellite devices that match the **product-model *model-name*** definition. Those configuration statements are not applied to satellite devices that do not match the definition.

Options ***model-name***—Defines the satellite device product models that will use the candidate uplink port policy. It can be a complete device model name, to match that device model exactly. You can also use the wildcard character (*) in the match term to match zero or more of any character.

Some examples of using the wildcard character in the match term:

- To apply the satellite policy to all EX4300 switches in the satellite device role, enter **EX4300*** as the *model-name*.
- To apply the satellite policy to all QFX5100 switches in the satellite device role, enter **QFX5100*** as the *model-name*.
- To apply the satellite policy to QFX5100 switches with model names that start with QFX5100-96, enter **QFX5100-96*** as the *model-name*.

Required Privilege Level admin—To view this statement in the configuration.
admin-control—To add this statement to the configuration.

Related Documentation
- *Configuring Junos Fusion Provider Edge*
- *Configuring or Expanding a Junos Fusion Enterprise*

satellite-policies

Syntax

```
satellite-policies {
  <candidate-uplink-port-profile policy-name> {
    <holddownholddown-time>;
    <minimum-linksnumber-of-links>;
    <uplink-port-group uplink-port-group-name>;
    term term-name {
      from {
        product-model model-name;
        <holddown holddown-time>;
        <minimum-links number-of-links>;
        <uplink-port-group uplink-port-group-name>;
      }
    }
  }
  environment-monitoring-policy policy-name {
    <alarm <linkdown>
    term term-name {
      from {
        product-model model-name;
      }
    }
  }
  forwarding-policy {
    policy-name {
      port-group-extended name;
        filter filter-name;
        mirror-egress port-group-mirror port-group-mirror;
      mirror-ingress port-group-mirror port-group-mirror,
        port-group-uplink port-group-uplnk-name
          holddowntime;
          minimum-links number;
      term term-name {
        from {
          port-group-extended name;
            filter filter-name;
            mirror-egress port-group-mirror port-group-mirror;
          mirror-ingress port-group-mirror port-group-mirror,
            port-group-uplink port-group-uplnk-name
              holddowntime;
              minimum-links number;
          product-model model-name;
          port-group-extended port-group-alias-name {
            port-group-uplink port-group-alias-name;
          }
        }
      }
    }
  }
  port-group-alias port-group-alias-name {
    pic pic-number {
    port [port-number | port-number-range | all];
    }
```

```
}
```

Hierarchy Level [edit policy-options]

Release Information Statement introduced in Junos OS Release 14.2R3 for Junos Fusion.

Description Configure satellite policies for a Junos Fusion.

Options The remaining statements are explained separately.

Required Privilege Level admin—To view this statement in the configuration.
admin-control—To add this statement to the configuration.

Related Documentation

- *Configuring Junos Fusion Provider Edge*
- *Configuring or Expanding a Junos Fusion Enterprise*

satellite-management (Junos Fusion)

Syntax

```
satellite-management {
  aging-timer aging-timer;
  auto-satellite-conversion {
    satellite [slot-id | range | all];
  }
  cluster cluster-name{
    cascade-ports interface-name;
    cluster-id cluster-id-number;
    fpc slot-id{
      alias alias;
      description description;
      member-id member-id-number;
      system-id mac-address;
    }
    }
  designated-event-forwarding
  environment-monitoring-policy policy;
  firewall
    family family-name {
      filter filter-name {
        term term-name {
          from {
            match-conditions;
          }
          then {
            action;
            action-modifiers;
          }
        }
      }
    }
  fpc slot-id{
    alias alias;
    cascade-ports interface-name;
    description description;
    environment-monitoring-policy policy;
    serial-numberserial-number;
    system-id mac-address;
    uplink-failure-detection {
      candidate-uplink-policy policy;
    }
  }
  psu {
    redundancy {
      n-plus-n;
    }
  }
  redundancy-groups {
    chassis-id number;
    redundancy-group-name {
      redundancy-group-id redundancy-group-id-number;
      peer-chassis-id peer-chassis-id-number {
```

```
            inter-chassis-link interface-name;
            no-auto-iccp-provisioning;
            no-auto-vlan-provisioning;
            satellite satellite-device-fpc-IDs;
            }
        }
    }
    single-home {
        satellite [slot-id |slot-id-range | all];
    }
    upgrade-groups upgrade-group-name {
        satellite [slot-id | range | all];
    }
    uplink-failure-detection {
        candidate-uplink-policy policy;
    }
}
```

Hierarchy Level [edit chassis]

Release Information Statement introduced in Junos OS Release 14.2R3 for Junos Fusion Provider Edge.
Statement introduced in Junos OS Release 16.1R1 for Junos Fusion Enterprise.
Statement introduced in Junos OS Release 17.2R1 for Junos Fusion Data Center.

Description Configure and manage a Junos Fusion.

If you enter the **delete chassis satellite-management** command to delete a Junos Fusion configuration, we recommend also rebooting the Routing Engines on your device to maximize device performance.

NOTE: In a Junos Fusion Data Center with EVPN wherein VXLAN encapsulation is used, firewall filters with next-interface or next-ip actions are not supported.

Options The remaining statements are explained separately.

Required Privilege Level admin—To view this statement in the configuration.
admin-control—To add this statement to the configuration.

Related Documentation

- *Configuring or Expanding a Junos Fusion Enterprise*
- *Configuring Junos Fusion Provider Edge*

CHAPTER 21

Class of Service on Junos Fusion Data Center

Understanding CoS in Junos Fusion Data Center

Junos Fusion provides a method of significantly expanding the number of available network interfaces on an *aggregation device* by allowing the aggregation device to add interfaces through interconnections with *satellite devices*. The entire system—the interconnected aggregation device and satellite devices—is called Junos Fusion. Junos Fusion simplifies network administration by appearing in the network topology as a single device, and the single device is managed from a single IP address.

Figure 21 on page 1037 shows the basic Junos Fusion Data Center topology.

Figure 21: Basic Junos Fusion Topology

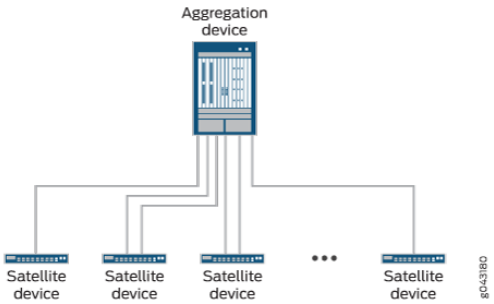

Beginning with Junos OS Release 17.2R1, Junos Fusion Data Center supports CoS on single- or dual- aggregation device configurations. Beginning with Junos OS Release 18.1R2, Junos Fusion Data Center support CoS on quad-aggregation device configurations. CoS configuration is the same on Junos Fusion Data Center regardless of the selected architecture - single, dual, or quad aggregation devices.

This topic describes class of service (CoS) on the different types of ports in Junos Fusion.

This topic covers:

Overview of CoS on Different Types of Ports in Junos Fusion

Figure 22 on page 1038 provides an overview of packet flow through Junos Fusion and how CoS features are applied at the different ports.

Figure 22: Junos Fusion CoS Feature Application

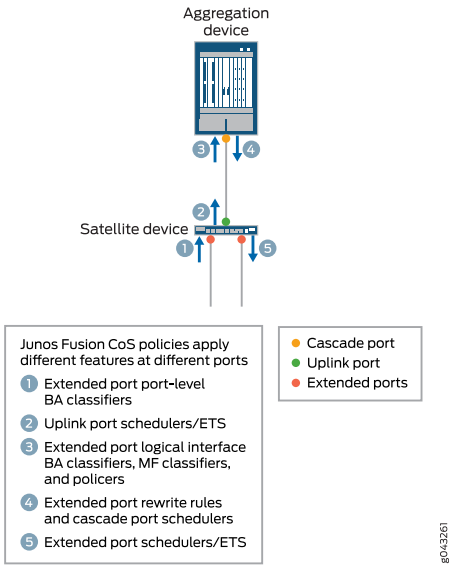

All configuration for CoS policies for Junos Fusion is done on the aggregation device. For CoS policies that you define for extended ports, however, different portions of that policy are applied at different points in a packet's path through Junos Fusion. From Figure 22 on page 1038:

1. As a packet enters an extended port, any port-level (physical interface-level) behavior aggregate (BA) classifier you define for that port is applied to derive a forwarding class and packet loss priority.
2. As that packet exits the uplink port, you can apply schedulers or enhanced transmission selection (ETS) based on the port-level BA classifier assigned at the ingress extended port.
3. As the packet enters the aggregation device at the cascade port, any multifield classifiers, policers, or logical interface-level BA classifiers you define for the ingress extended port are applied.
4. As the packet exits the aggregation device at the cascade port, any rewrite rules you define for the egress extended port, as well as any schedulers you define for the cascade port, are applied. Also, the forwarding class determined in the previous step

is carried in the 801.2BR header to the satellite device and used to select the output queue at the egress extended port.

5. Finally, as the packet exits an extended port, any schedulers or ETS you define for that port are applied based on the forwarding class determined by the multifield classifiers, policers, or logical interface-level BA classifiers defined for the ingress extended port.

The following sections provide further information about implementing CoS on each port type in Junos Fusion.

CoS on Extended Ports and Uplink Ports in Junos Fusion

As with all other software configuration in a Junos Fusion, all class of service (CoS) scheduling policies for extended ports and uplink ports on the satellite devices are provisioned on the aggregation device. Similarly, standard Junos OS CoS commands are issued on the aggregation device for retrieving extended port and uplink port CoS states and queue statistics. The aggregation device supports configuring the following CoS features for each extended port and uplink port on each satellite device:

- Behavior aggregate classifiers
- Multifield classifiers
- Input and output policers
- Forwarding classes
- Priority-based flow control (PFC)
- Enhanced transmission selection (ETS)
- Traffic control profiles
- Schedulers and scheduler maps
- Egress rewrite rules

NOTE: Configuring CoS policies on *satellite devices* (on both extended and uplink ports) has the following restrictions:

- IP precedence classifiers are not supported. DSCP classifiers are supported, however.
- Interpolated drop profiles are not supported.
- The transmit-rate option is supported for schedulers. However, the remainder, rate-limit, and exact options are not supported under transmit-rate.

While CoS features for satellite device ports are configured on the aggregation device, the actual classification, queueing, and scheduling is performed on the satellite devices. Information on actual traffic shaping is not passed back to the aggregation device. Logical interface statistics for the **show interfaces** command are collected on the aggregate

device and do not include shaping rate data. For actual traffic statistics gathered on satellite device interfaces, use the statistics for the physical interface and not the logical interface.

NOTE: CoS statistics are not supported on extended ports.

CoS on Cascade Ports in Junos Fusion

When a cascade port is created, two priority groups are automatically created:

- One in-band management priority group for traffic that only flows between the aggregation device and the satellite devices, such as keepalives, for provisioning information, and for software updates.
- One for data logical priority group for regular traffic that flows into and out of Junos Fusion.

One percent (1%) of bandwidth is reserved for the management priority group. The remaining bandwidth is available to the data priority group.

The default scheduling policy is applied to the data priority group. This reserves 15 percent of the available bandwidth and buffer space for the best effort forwarding class (mapped to queue 0), 35 percent for the fcoe forwarding class (queue 3), 35 percent for the no-loss forwarding class (queue 4) and 15 percent for the network control forwarding class (queue 7). You can create custom forwarding classes and schedulers by applying a custom scheduler map to this priority group.

Release History Table

Release	Description
18.1R2	Beginning with Junos OS Release 18.1R2, Junos Fusion Data Center support CoS on quad-aggregation device configurations.
17.2R1	Beginning with Junos OS Release 17.2R1, Junos Fusion Data Center supports CoS on single- or dual- aggregation device configurations.

Related Documentation

- Junos Fusion Data Center Overview on page 3
- Understanding Junos Fusion Data Center Components on page 6
- Configuring CoS in Junos Fusion Data Center on page 1040

Configuring CoS in Junos Fusion Data Center

Junos Fusion significantly expands the number of available network interfaces on an *aggregation device* by allowing the aggregation device to add interfaces through interconnections with *satellite devices*. The entire system—the interconnected aggregation device and satellite devices—is called Junos Fusion. Junos Fusion simplifies network

administration by appearing in the network topology as a single device, and the single device is managed from a single IP address.

This topic describes how to configure CoS on the different types of ports in Junos Fusion.

This topic covers:

Configuring Behavior Aggregate Classifiers on Satellite Device Extended Ports

Normally, you apply a behavior aggregate (BA) classifier to a logical interface on an aggregation device at the **[edit class-of-service interfaces *interface-name* unit *logical-unit-number*]** hierarchy level. When traffic from a satellite device extended port reaches the aggregation device, the BA classifier configured for the logical interface level of the satellite device extended port is applied the same as it is for traffic from other non-extended ports to help determine the forwarding class of the traffic; policers and multifield classifiers can also factor in determining the forwarding class of the traffic. When the aggregation devices sends the traffic out to the satellite device, the forwarding class is carried in the 801.2BR header. The satellite device then uses the forwarding class to select the output queue at the *egress extended port*.

You can also apply a BA classifier at the physical interface level of an extended port. This classifier is used to determine the output queue at the *uplink port* of the satellite device.

NOTE: **IP precedence classifiers are not supported on extended ports at the physical interface level. DSCP classifiers are supported, however.**

NOTE: **You cannot apply a physical interface-level classifier on an aggregation device local port.**

To add a behavior aggregate classifier to the physical interface level of a satellite device extended port in Junos Fusion:

1. Define the classifier.

```
[edit class-of-service]
user@agg-device#set classifiers dscp dscp-1 forwarding-class best-effort-3
  loss-priority low code-points 001010
```

2. Apply the classifier to the physical extended port.

```
[edit class-of-service]
```

```
user@agg-device#set interfaces xe-100/0/33 classifiers dscp dscp-1
```

3. Commit the changes and then confirm the configuration.

```
[edit class-of-service]
user@agg-device# show
classifiers {
    dscp dscp-1 {
        forwarding-class best-effort-3 {
            loss-priority low code-points 001010;
        }
    }
}
interfaces {
    xe-100/0/33 {
        classifiers {
            dscp dscp-1;
        }
    }
}
```

In the above configuration example, packets entering port xe-100/0/33 with a DSCP value of **001010** will be assigned a forwarding class of **best-effort-3** to select the output queue at the uplink port as the packet travels from the satellite device to the aggregation device.

See Also

- Understanding Junos Fusion Ports on page 12
- *Understanding How Behavior Aggregate Classifiers Prioritize Trusted Traffic*
- *Overview of Assigning Service Levels to Packets Based on Multiple Packet Header Fields*

Configuring Rewrite Rules on Satellite Device Extended Ports

You apply rewrite rules to logical interfaces on satellite device extended ports.

To add a rewrite rule to a satellite device extended port in a Junos Fusion:

1. Define the rewrite rule.

```
[edit class-of-service]
user@agg-device#set rewrite-rules ieee-802.1 rewrite1p forwarding-class best-effort
  loss-priority low code-point 010
```

2. Apply the rewrite rule to a logical interface.

```
[edit class-of-service]
user@agg-device#set interfaces xe-108/0/47 unit 0 rewrite-rules ieee-802.1 rewrite1p
```

3. Commit the changes and then confirm the configuration.

```
[edit class-of-service]
user@agg-device# show
rewrite-rules {
    ieee-802.1 rewrite1p {
```

```
            forwarding-class best-effort {
                loss-priority low code-point 010;
            }
        }
    }
    interfaces {
        xe-108/0/47 {
            unit 0 {
                rewrite-rules {
                    ieee-802.1 rewrite-1p;
                }
            }
        }
    }
```

In Junos OS, rewrite rules only look at the forwarding class and packet loss priority of the packet (as assigned by a behavior aggregate or multifield classifier at ingress), not at the incoming CoS value, to determine the CoS value to write to the packet header at egress. The above configuration means that, for any packet exiting the xe-108/0/47.0 interface that has a forwarding class of **best-effort** and a packet loss priority of **low**, the ieee-802.1 CoS value will be rewritten to **010**.

See Also

- Understanding Junos Fusion Ports on page 12
- *Rewriting Packet Headers to Ensure Forwarding Behavior*

Changing the Default Scheduling Policy on an Aggregated Device Cascade Port

When a cascade port is created, two logical interfaces are automatically created:

- One in-band management logical interface (assigned unit 32769) for traffic that only flows between the aggregation device and the satellite devices, such as keepalives, for provisioning information, and for software updates.
- One for data logical interface (assigned unit 32770) for regular traffic that flows into and out of Junos Fusion.

Let's say, for example, that interface xe-0/0/1 is configured as a cascade port. The command **show interfaces xe-0/0/1 terse** produces output similar to the following:

```
user@agg-device# run show interfaces xe-0/0/1 terse
Interface               Admin Link Proto    Local                 Remote
xe-0/0/1                up    up
xe-0/0/1.32769          up    up   inet     10.0.0.5/30
xe-0/0/1.32770          up    up   bridge
```

The control logical interface (unit 32769) is automatically assigned an internal traffic control profile (__cp_control_tc_prof) that guarantees 50 Mbps of bandwidth for the logical interface, a 10 percent shaping rate, and the default scheduling policy. The default scheduling policy is applied to the data logical interface. For example:

```
user@agg-device# run show class-of-service interface xe-0/0/1
Physical interface: xe-0/0/1, Index: 144
Maximum usable queues: 8, Queues in use: 4
```

```
  Scheduler map: <default>, Index: 2
  Congestion-notification: Disabled

  Logical interface: xe-0/0/1.32769, Index: 344
Object                  Name                    Type                    Index
Traffic-control-profile __cp_control_tc_prof    Output                  17227
Classifier              ipprec-compatibility    ip                         13

  Logical interface: xe-0/0/1.32770, Index: 343
Object                  Name                    Type                    Index
Scheduler-map           <default>               Output                      2
```

and:

```
user@agg-device# run show class-of-service scheduler-hierarchy interface xe-0/0/1

Interface/                    Shaping Guarnteed  Guaranteed/   Queue   Excess
Resource name                    rate      rate       Excess  weight   weight
                                kbits     kbits     priority           high/low
  xe-0/0/1.32770             10000000         0                          1    1
    BE                       10000000         0     Low  Low     118
    NC                       10000000         0     Low  Low       6
  xe-0/0/1.32769              1000000     50000                         62   62
    BE                        1000000     47500     Low  Low     118
    NC                        1000000      2500     Low  Low       6
```

You can create custom forwarding classes and schedulers for the data logical interface by applying a customer scheduler map to that logical interface. For example, to apply a customer scheduler policy to the data logical interface:

1. Create customer schedulers.

   [edit class-of-service]
   user@ex9200-agg-device#set schedulers AF_SCH_CORE transmit-rate percent 40
   user@ex9200-agg-device#set schedulers AF_SCH_CORE buffer-size percent 40
   user@ex9200-agg-device#set schedulers AF_SCH_CORE priority medium-high
   user@ex9200-agg-device#set schedulers BE_SCH_CORE transmit-rate percent 10
   user@ex9200-agg-device#set schedulers BE_SCH_CORE buffer-size percent 10
   user@ex9200-agg-device#set schedulers BE_SCH_CORE priority low
   user@ex9200-agg-device#set schedulers EF_SCH_CORE transmit-rate percent 40
   user@ex9200-agg-device#set schedulers EF_SCH_CORE buffer-size percent 40
   user@ex9200-agg-device#set schedulers EF_SCH_CORE priority medium-low
   user@ex9200-agg-device#set schedulers NC_SCH_CORE transmit-rate percent 10
   user@ex9200-agg-device#set schedulers NC_SCH_CORE buffer-size percent 10
   user@ex9200-agg-device#set schedulers NC_SCH_CORE priority high

2. Create a scheduler map.

   [edit class-of-service]
   user@ex9200-agg-device#set scheduler-maps CORE_SCHED_MAP forwarding-class BE scheduler BE_SCH_CORE
   user@ex9200-agg-device#set scheduler-maps CORE_SCHED_MAP forwarding-class EF scheduler EF_SCH_CORE
   user@ex9200-agg-device#set scheduler-maps CORE_SCHED_MAP forwarding-class AF scheduler AF_SCH_CORE

```
user@ex9200-agg-device#set scheduler-maps CORE_SCHED_MAP forwarding-class
  NC scheduler NC_SCH_CORE
```

3. Apply the scheduler map to the data logical interface.

```
[edit class-of-service]
user@ex9200-agg-device#set interfaces xe-0/0/1 unit 32770 scheduler-map
  CORE_SCHED_MAP
```

4. Commit the changes and then confirm the configuration.

```
[edit class-of-service]
user@agg-device# show
interfaces {
    xe-0/0/1 {
        unit 32770 {
            scheduler-map CORE_SCHED_MAP;
        }
    }
}
scheduler-maps {
    CORE_SCHED_MAP {
        forwarding-class BE scheduler BE_SCH_CORE;
        forwarding-class EF scheduler EF_SCH_CORE;
        forwarding-class AF scheduler AF_SCH_CORE;
        forwarding-class NC scheduler NC_SCH_CORE;
    }
}
schedulers {
    BE_SCH_CORE {
        transmit-rate percent 10;
        buffer-size percent 10;
        priority low;
    }
    EF_SCH_CORE {
        transmit-rate percent 40;
        buffer-size percent 40;
        priority medium-low;
    }
    AF_SCH_CORE {
        transmit-rate percent 40;
        buffer-size percent 40;
        priority medium-high;
    }
    NC_SCH_CORE {
        transmit-rate percent 10;
        buffer-size percent 10;
        priority high;
    }
}
```

5. Verify your changes.

```
user@agg-device# run show class-of-service interface xe-0/0/1
Physical interface: xe-0/0/1, Index: 144
Maximum usable queues: 8, Queues in use: 4
  Scheduler map: <default>, Index: 2
  Congestion-notification: Disabled
```

```
  Logical interface: xe-0/0/1.32769, Index: 344
Object                  Name                    Type                    Index
Traffic-control-profile __cp_control_tc_prof    Output                  17227
Classifier              ipprec-compatibility    ip                         13

  Logical interface: xe-0/0/1.32770, Index: 343
Object                  Name                    Type                    Index
Scheduler-map           CORE_SCHED_MAP          Output                  23433
```

and:

```
user@agg-device# run show class-of-service scheduler-hierarchy interface
xe-0/0/1
Interface/                    Shaping Guarnteed  Guaranteed/   Queue   Excess
Resource name                    rate      rate       Excess  weight   weight

                                kbits     kbits     priority          high/low

  xe-0/0/1.32770             10000000         0                          1
 1
    BE                       10000000         0     Low  Low      12
    EF                       10000000         0  Medium  Low      50
    AF                       10000000         0  Medium  Low      50
    NC                       10000000         0    High High      12
  xe-0/0/1.32769              1000000     50000                         62
62
    BE                        1000000     47500     Low  Low     118
    NC                        1000000      2500     Low  Low       6
```

See Also

- *How Schedulers Define Output Queue Properties*
- *Default Schedulers Overview*

Configuring PFC in Junos Fusion Data Center

Priority-based flow control (PFC) helps ensure lossless transport across data center bridging interfaces by pausing incoming traffic when output queue buffers fill to a certain threshold. PFC is only available in Junos Fusion Data Center on forwarding paths through satellite devices that support PFC and lossless forwarding classes.

To guarantee lossless behavior when configuring PFC in Junos Fusion Data Center:

- PFC must be enabled end to end (including the cascade ports, uplink ports, and extended ports) for the lossless traffic path.
- Redundant cascade links are available and the destination extended port next hop can always be resolved to a *local* PFC-enabled cascade port (so packets are not forwarded through another aggregation device).

PFC is implicitly enabled on cascade ports and uplink ports for all default and custom no-loss forwarding classes. To enable PFC end to end in Junos Fusion Data Center for default forwarding classes, you need only enable PFC on extended ports.

NOTE: **To configure end-to-end PFC with a custom-configured forwarding class, you must also configure a custom scheduler on the cascade ports, and configure classifiers on the extended port physical interface and logical interface to map the traffic to the correct no-loss forwarding queues. (See *Assigning CoS Components to Interfaces*.)**

To apply PFC to a satellite device extended port in Junos Fusion Data Center:

1. Define the congestion notification profile.

   [edit class-of-service]
   user@agg-device#set congestion-notification-profile lossless-cnp input ieee-802.1 code-point 011 pfc
   user@agg-device#set congestion-notification-profile lossless-cnp input ieee-802.1 code-point 100 pfc

2. Apply the congestion notification profile to an extended port interface.

   [edit class-of-service]
   user@agg-device#set interfaces xe-100/0/20 congestion-notification-profile lossless-cnp

3. Commit the changes and then confirm the configuration.

```
[edit class-of-service]
user@agg-device# show
congestion-notification profile {
    lossless-cnp {
        input {
            ieee-802.1 {
                code-point 011 {
                    pfc;
```

```
                    }
                    code-point 100 {
                        pfc;
                    }
                }
            }
        }
    }
    interfaces {
        xe-100/0/20 {
            congestion-notification-profile {
                lossless-cnp;
            }
        }
    }
```

Enable PFC end-to-end.

Related Documentation

- Understanding CoS in Junos Fusion Data Center on page 1037

CHAPTER 22

Uplink Failure Detection on Junos Fusion Data Center

Overview of Uplink Failure Detection on a Junos Fusion

The uplink failure detection feature on a Junos Fusion enables satellite devices to detect link failures on the uplink interfaces used to connect to aggregation devices. When uplink failure detection detects uplink failure on a satellite device, all of the device's extended ports (which connect to host devices) are shut down. Shutting down the extended ports allows downstream host devices to more quickly identify and adapt to the outage. For example, when a host device is connected to two satellite devices, and uplink failure detection shuts down the extended ports on one satellite device, the host device can more quickly recognize the uplink failure and redirect traffic through the other, active satellite device.

You can configure uplink failure detection globally, for all satellite devices of a Junos Fusion, and for individual satellite devices. Uplink failure detection configuration at the satellite device level overrides the global uplink failure detection configuration.

Uplink failure detection configuration allows you to configure these options:

- The minimum number of active uplink ports a satellite device must have to remain active. The default is one active uplink port. You can use this option to specify more minimum active ports.
- The amount of time uplink failure detection waits to try to re-enable disabled extended ports. This wait time is called a hold-down period. It is intended to avoid port flapping on the extended ports when uplink port connectivity is unstable. The default hold-down period is six seconds.

Uplink failure detection must know which ports on a satellite device can be used as uplink ports. These are called candidate uplink ports. Table 55 on page 1050 shows the default set of candidate uplink ports that uplink failure detection selects for failure detection. If you choose not to use the default uplink ports for your satellite devices, you need to specify which uplink ports you want to use for uplink failure detection by creating a candidate uplink port profile and applying it to the satellite device's uplink failure detection configuration.

CAUTION: **The physically connected uplink ports on a satellite device must be defined as candidate uplink ports in the Junos Fusion configuration. If the uplink ports on a satellite device are not configured as candidate uplink ports, uplink failure detection cannot be enabled on the device, and a system log message is generated.**

Table 55: UFD Default Uplink Interfaces for Satellite Devices

Device Type	Default Uplink Interfaces
EX4300-24T (4 ports each on PIC1 and PIC2)	1/0 through 1/3 and 2/0 through 2/3
EX4300-32F (4 ports on PIC 0, 2 ports on PIC 1 and 8 ports on PIC 2)	0/32 through 0/35 1/0 through 1/1 2/0 through 2/7
EX4300-48T (4 ports each on PIC1 and PIC2)	1/0 through 1/3 and 2/0 through 2/3
EX4300-48T-BF (4 ports each on PIC1 and PIC2)	1/0 through 1/3 and 2/0 through 2/3
QFX5100-24Q-2P (4 ports on PIC 0)	0/20 through 0/23
QFX5100-48S-6Q (6 QSFP+ ports)	0/48 through 0/53
QFX5100-48T-6Q (6 QSFP+ ports)	0/48 through 0/53
QFX5100-96S-8Q (8 QSFP+ ports)	0/96 through 0/103

Related Documentation

- Configuring Uplink Failure Detection on a Junos Fusion on page 1051

Configuring Uplink Failure Detection on a Junos Fusion

The uplink failure detection feature on a Junos Fusion enables satellite devices to detect link failures on the uplink interfaces used to connect to aggregation devices. When uplink failure detection detects uplink failure on a satellite device, all of the device's extended ports (which connect to host devices) are shut down.

The following topics describe how to configure uplink failure detection on a Junos Fusion:

- Enabling Uplink Failure Detection on a Junos Fusion on page 1051
- Configuring a Candidate Uplink Port Policy on page 1052
- Configuring an Uplink Port Group on page 1054

Enabling Uplink Failure Detection on a Junos Fusion

You can enable uplink failure detection on a Junos Fusion at the following levels in the configuration hierarchy:

- To enable uplink failure detection globally, for all satellite devices in the Junos Fusion, include the uplink failure detection configuration at the **[edit chassis satellite-management]** level.
- To enable uplink failure detection on a specific satellite device, include the uplink failure detection configuration at the **[edit chassis satellite-management fpc *slot-id*]** level. Uplink failure detection configuration applied to a satellite device overrides the global uplink failure detection configuration.

Uplink failure detection configuration syntax is the same at all hierarchy levels. This topic shows how to configure uplink failure detection at the global level, but you can also apply uplink failure detection configuration at the satellite device level.

To enable uplink failure detection on a Junos Fusion, do the following on the fabric's aggregation device:

1. Enable uplink failure detection with default settings:

   ```
   [edit chassis satellite-management]
   user@switch# set uplink-failure-detection
   ```

   The default configuration parameters are described in Table 56 on page 1052.

2. (Optional) Apply custom uplink failure detection settings by specifying a candidate uplink port policy:

   ```
   [edit chassis satellite-management uplink-failure-detection]
   user@switch# candidate-uplink-policy policy-name
   ```

   For information about configuring candidate uplink policies, see "Configuring a Candidate Uplink Port Policy" on page 1052.

Table 56: Junos Fusion Uplink Failure Detection Default Configuration

Configuration Parameter	Description	Default
holddown	Configures the interval of time uplink failure detection waits before trying to re-enable a satellite device's extended ports after shutting them down due to an uplink port failure.	6 seconds
minimum-links	Configures the minimum number of active uplink ports a satellite device must have. If a satellite device has fewer than this number of active uplink ports, uplink failure detection shuts down its extended ports.	1 link
uplink-port-group	Defines a set of candidate uplink ports to assign to satellite devices.	Each satellite device model has a set of default uplink ports. You only need to assign uplink ports if you do not want to use the default ports. See Table 55 on page 1050 for the default uplink ports by device.

Configuring a Candidate Uplink Port Policy

A candidate uplink port policy contains uplink failure detection uplink port configuration that you can apply to satellite devices to override the default uplink failure detection behavior.

You can enter configuration statements in a candidate uplink port policy at these levels of the hierarchy:

- Enter configuration statements at the level **[edit policy-options satellite-policies candidate-uplink-port-policy *policy-name*]** to override the default uplink failure detection behavior. Statements configured at this level are applied if the policy is applied to a satellite device that does not match a **product-model** statement in any term in the policy. If the policy contains no terms, the statements at this level are applied to every satellite device to which the policy is applied.
- Create terms within the candidate uplink port policy at the level **[edit policy-options satellite-policies candidate-uplink-port-policy *policy-name* term *term-name*]**. Use terms to apply different uplink failure detection configurations to certain satellite devices, based on their product model. Each term contains match criteria that is compared against the model name of each satellite device to which the policy is applied. If the criteria matches the device model, the configuration specified in the term is applied to the device. Terms are evaluated in the order they appear in the configuration. The first term that matches a satellite device is applied to the device.

Configuring a candidate uplink port policy is described in the following sections:

- Configuring Candidate Uplink Port Policy Default Configuration on page 1053
- Configuring Candidate Uplink Port Policy Terms on page 1053

Configuring Candidate Uplink Port Policy Default Configuration

Uplink failure detection has the following default configuration parameters that apply if you enable uplink failure detection with no additional configuration:

- The default configuration settings are described in Table 56 on page 1052.
- The default uplink ports that are assigned to each satellite device type are described in "Overview of Uplink Failure Detection on a Junos Fusion" on page 1049.

A candidate uplink port policy can contain configuration statements that override the defaults if the policy is applied to a satellite device that does not match a **product-model** statement in any term in the policy.

To configure a candidate uplink port policy default configuration:

1. (Optional) Specify the interval of time uplink failure detection waits before trying to re-enable a satellite device's extended ports after shutting them down due to an uplink port failure:

   ```
   [edit policy-options satellite-policies candidate-uplink-port-policy
   policy-name]
   user@switch# set holddown interval
   ```

2. (Optional) Specify the minimum number of active uplink ports a satellite device must have. If a satellite device has fewer than this number of active uplink ports, uplink failure detection shuts down its extended ports:

   ```
   [edit policy-options satellite-policies candidate-uplink-port-policy
   policy-name]
   user@switch# set minimum-links link-count
   ```

3. (Optional) Specify an uplink port group to assign to satellite devices:

   ```
   [edit policy-options satellite-policies candidate-uplink-port-policy
   policy-name]
   user@switch# set uplink-port-group group-name
   ```

   For information about configuring an uplink port group, see "Configuring an Uplink Port Group" on page 1054.

Configuring Candidate Uplink Port Policy Terms

You can configure terms in a candidate uplink port policy to apply uplink failure detection configuration to certain satellite devices, based on their device model. For example, you can create a term that matches all QFX 5100 Series switches. When the policy is applied to a QFX 5100 Series switch, the other configuration statements in the term are applied to the switch. If the policy is applied to satellite devices that are not QFX 5100 Series switches, the configuration statements in the term are not applied. When a candidate uplink port policy has multiple terms, the terms are evaluated in the order they appear in the configuration. The first term that matches a satellite device is applied to that satellite device.

To configure a candidate uplink port policy term:

1. Specify which device models the term will apply to:

   ```
   [edit policy-options satellite-policies candidate-uplink-port-policy policy-name
   term term-name from]
   user@switch# set-product-model model-name
   ```

   The other configuration statements in the term are only applied to satellite devices whose device model matches the match term *model-name*.

   The match term *model-name* can be a complete device model name, to match that device model exactly. You can also use the wildcard character (*) in the match term to match zero or more of any character.

   Some examples of using the wildcard character in the match term:

   - To apply the satellite policy to all EX 4300 Series switches in the satellite device role, enter **EX4300*** as the *model-name*.
   - To apply the satellite policy to all QFX 5100 Series switches in the satellite device role, enter **QFX5100*** as the *model-name*.
   - To apply the satellite policy to QFX 5100 Series switches with model names that start with QFX5100-96, enter **QFX5100-96*** as the *model-name*.

2. (Optional) Specify the interval of time uplink failure detection waits to re-enable a satellite device's extended ports after shutting them down due to an uplink port failure:

   ```
   [edit policy-options satellite-policies candidate-uplink-port-policy policy-name
   term term-name from]
   user@switch# set holddown interval
   ```

3. (Optional) Specify the minimum number of active uplink ports a satellite device must have. If a satellite device has fewer than this number of active uplink ports, uplink failure detection shuts down its extended ports:

   ```
   [edit policy-options satellite-policies candidate-uplink-port-policy
   policy-name]
   user@switch# set minimum-links link-count
   ```

4. (Optional) Specify an uplink port group to assign to satellite devices:

   ```
   [edit policy-options satellite-policies candidate-uplink-port-policy policy-name
   term term-name from]
   user@switch# set uplink-port-group group-name
   ```

   For information about configuring an uplink port group, see "Configuring an Uplink Port Group" on page 1054.

Configuring an Uplink Port Group

An uplink port group defines a set of candidate uplink ports on a satellite device. Uplink port groups are assigned to candidate uplink port policies, which are assigned to satellite devices. Every satellite device type has default candidate uplink ports, which are described

in "Overview of Uplink Failure Detection on a Junos Fusion" on page 1049. You do not need to create uplink ports groups if you want to use the default candidate uplink ports on satellite devices.

CAUTION: The physically connected uplink ports on a satellite device must be defined as candidate uplink ports in the Junos Fusion configuration. If the uplink ports on a satellite device are not configured as candidate uplink ports, uplink failure detection cannot be enabled on the device, and a system log message is generated.

To create an uplink port group:

1. Specify the uplink port group name:

   ```
   [edit policy-options satellite-policies]
   user@switch# set port-group-alias port-group-alias-name
   ```

2. Configure the PICs that will contain ports to be identified as candidate uplink ports:

   ```
   [edit policy-options satellite-policies port-group-alias port-group-alias-name]
   user@switch# set pic pic-number
   ```

3. Configure the ports on the PICs that will be identified as candidate uplink ports:

   ```
   [edit policy-options satellite-policies port-group-alias port-group-alias-name
   pic pic-number]
   user@switch# set port [port-number | port-number-range | all]
   ```

Related Documentation

- Overview of Uplink Failure Detection on a Junos Fusion on page 1049

candidate-uplink-port-policy (satellite-policies)

Syntax

```
candidate-uplink-port-policy policy-name {
  <holddown holddown-time>;
  <minimum-links number-of-links>;
  <uplink-port-group uplink-port-group-name>;
  term term-name {
    from {
      product-model model-name;
      <holddown holddown-time>;
      <minimum-links number-of-links>;
      <uplink-port-group uplink-port-group-name>;
    }
  }
}
```

Hierarchy Level

[edit policy-options satellite-policies]

Release Information

Statement introduced in Junos OS Release 14.2R3.

Description

Configures a candidate uplink port profile, which contains uplink failure detection feature configuration that can be applied to satellite devices in a Junos Fusion.

Default

There is no configured candidate uplink port profile, by default.

Options

policy-name—User-defined name for the policy.

The remaining statements are explained separately.

Required Privilege Level

admin—To view this statement in the configuration.
admin-control—To add this statement to the configuration.

Related Documentation

- *Configuring Junos Fusion Provider Edge*
- *Configuring or Expanding a Junos Fusion Enterprise*

holddown (candidate-uplink-port-profile)

Syntax

holddown *interval*;

Hierarchy Level

[edit policy-options satellite-policies candidate-uplink-port-profile*profile-name*]
[edit policy-options satellite-policies candidate-uplink-port-profile *profile-name* term *term-name* from]

Release Information

Statement introduced in Junos OS Release 14.2R3.

Description

Configures the interval of time uplink failure detection waits before trying to try re-enable a satellite device's extended ports after shutting them down due to an uplink port failure. It is intended to avoid port flapping on the extended ports when uplink port connectivity is unstable.

Default

The default holddown interval is 6 seconds.

Options

interval—The holddown interval, in seconds. Valid values are 1-600 seconds.

Required Privilege Level

admin—To view this statement in the configuration.
admin-control—To add this statement to the configuration.

Related Documentation

- *Configuring Junos Fusion Provider Edge*
- *Configuring or Expanding a Junos Fusion Enterprise*

minimum-links (candidate-uplink-port-profile)

Syntax minimum-links *link-count*;

Hierarchy Level [edit policy-options satellite-policies candidate-uplink-port-profile *profile-name*]
[edit policy-options satellite-policies candidate-uplink-port-profile *profile-name* term *term-name* from]

Release Information Statement introduced in Junos OS Release 14.2R3.

Description Configures the minimum number of active uplink ports a satellite device must have. If a satellite device has fewer than this number of active uplink ports, uplink failure detection shuts down its extended ports.

Default The default number of minimum links is 1.

Options *link-count*—Specifies the minimum number of active uplink ports a satellite device must have. Valid values are 1-32 links.

Required Privilege Level admin—To view this statement in the configuration.
admin-control—To add this statement to the configuration.

Related Documentation

- *Configuring Junos Fusion Provider Edge*
- *Configuring or Expanding a Junos Fusion Enterprise*

pic (satellite-policies port-group-alias)

Syntax

```
pic pic-number {
   port [port-number | port-number-range | all];
}
```

Hierarchy Level

[edit policy-options satellite-policies port-group-alias *port-group-alias-name*]

Release Information

Statement introduced in Junos OS Release 14.2R3.

Description

Specify the PIC number to apply a port group alias for satellite policies in a Junos Fusion.

You must also specify the ports on the PIC when you use this statement.

Options

pic-number—The PIC number on the satellite device.

The remaining statements are explained separately.

Required Privilege Level

admin—To view this statement in the configuration.
admin-control—To add this statement to the configuration.

Related Documentation

- *Configuring Junos Fusion Provider Edge*
- *Configuring or Expanding a Junos Fusion Enterprise*

port (satellite-policies port-group-alias)

Syntax port [*port-number* | *port-number-range* | all];

Hierarchy Level [edit policy-options satellite-policies port-group-alias *port-group-alias-name* pic *pic-number*]

Release Information Statement introduced in Junos OS Release 14.2R3.

Description Specify the port or ports to apply a port group alias for satellite policies in a Junos Fusion.

You must also specify the PIC when you use this statement.

Options ***port-number***—The port number on the PIC on the satellite device.

port-number-range—A range of port numbers on the PIC.

all—All ports on the PIC.

Required Privilege Level admin—To view this statement in the configuration.
admin-control—To add this statement to the configuration.

Related Documentation

- *Configuring Junos Fusion Provider Edge*
- *Configuring or Expanding a Junos Fusion Enterprise*

port-group-alias (satellite-policies)

Syntax

```
port-group-alias port-group-alias-name {
  pic pic-number {
    port [port-number | port-number-range | all];
  }
}
```

Hierarchy Level

[edit policy-options satellite-policies]

Release Information

Statement introduced in Junos OS Release 14.2R3.

Description

Configure a port group alias for satellite policies in a Junos Fusion.

A port group alias is used to define the candidate uplink ports on satellite devices that use the satellite policy.

CAUTION: **The physically connected uplink ports on a satellite device must be defined as candidate uplink ports in the Junos Fusion configuration. If the uplink ports on a satellite device are not configured as candidate uplink ports, uplink failure detection cannot be enabled on the device, and a system log message is generated.**

A port group alias is associated with a satellite policy using the **set uplink-port-group *uplink-port-group-name*** statement in the [**edit policy-options satellite-policies candidate-uplink-policy *policy-name***] hierarchy.

Default

Each satellite device model has a set of default uplink ports (see "Overview of Uplink Failure Detection on a Junos Fusion" on page 1049). You only need to assign an uplink port group to a satellite device if you do not want to use the default uplink ports.

Options

port-group-alias-name—The user-defined name of the port group alias.

The remaining statements are explained separately.

Required Privilege Level

admin—To view this statement in the configuration.
admin-control—To add this statement to the configuration.

Related Documentation

- *Configuring Junos Fusion Provider Edge*
- *Configuring or Expanding a Junos Fusion Enterprise*

product-model (Junos Fusion)

Syntax product-model *model-name*;

Hierarchy Level [edit policy-options satellite-policies candidate-uplink–port-policy *policy-name* term *term-name* from]
[edit policy-options satellite-policies candidate-uplink–port-policy *policy-name* term *term-name* from]
[edit policy-options satellite-policies forwarding-policy *policy-name* term *term-name* from]

Release Information Statement introduced in Junos OS Release 14.2R3.

Description Define the satellite device product models that will use the candidate uplink port policy defined in the **from** statement.

The other statements in the same **from** statement are applied to satellite devices that match the **product-model *model-name*** definition. Those configuration statements are not applied to satellite devices that do not match the definition.

Options ***model-name***—Defines the satellite device product models that will use the candidate uplink port policy. It can be a complete device model name, to match that device model exactly. You can also use the wildcard character (*) in the match term to match zero or more of any character.

Some examples of using the wildcard character in the match term:

- To apply the satellite policy to all EX4300 switches in the satellite device role, enter **EX4300*** as the *model-name*.
- To apply the satellite policy to all QFX5100 switches in the satellite device role, enter **QFX5100*** as the *model-name*.
- To apply the satellite policy to QFX5100 switches with model names that start with QFX5100-96, enter **QFX5100-96*** as the *model-name*.

Required Privilege Level admin—To view this statement in the configuration.
admin-control—To add this statement to the configuration.

Related Documentation
- *Configuring Junos Fusion Provider Edge*
- *Configuring or Expanding a Junos Fusion Enterprise*

satellite-policies

Syntax

```
satellite-policies {
  <candidate-uplink-port-profile policy-name> {
    <holddownholddown-time>;
    <minimum-linksnumber-of-links>;
    <uplink-port-group uplink-port-group-name>;
    term term-name {
      from {
        product-model model-name;
        <holddown holddown-time>;
        <minimum-links number-of-links>;
        <uplink-port-group uplink-port-group-name>;
      }
    }
  }
  environment-monitoring-policy policy-name {
    <alarm <linkdown>
    term term-name {
      from {
        product-model model-name;
      }
    }
  }
  forwarding-policy {
    policy-name {
      port-group-extended name;
        filter filter-name;
        mirror-egress port-group-mirror port-group-mirror;
      mirror-ingress port-group-mirror port-group-mirror,
        port-group-uplink port-group-uplnk-name
          holddowntime;
          minimum-links number;
      term term-name {
        from {
          port-group-extended name;
            filter filter-name;
            mirror-egress port-group-mirror port-group-mirror;
          mirror-ingress port-group-mirror port-group-mirror,
            port-group-uplink port-group-uplnk-name
              holddowntime;
              minimum-links number;
          product-model model-name;
          port-group-extended port-group-alias-name {
            port-group-uplink port-group-alias-name;
          }
        }
      }
    }
  }
  port-group-alias port-group-alias-name {
    pic pic-number {
    port [port-number | port-number-range | all];
    }
```

```
}
```

Hierarchy Level [edit policy-options]

Release Information Statement introduced in Junos OS Release 14.2R3 for Junos Fusion.

Description Configure satellite policies for a Junos Fusion.

Options The remaining statements are explained separately.

Required Privilege Level admin—To view this statement in the configuration.
admin-control—To add this statement to the configuration.

Related Documentation

- *Configuring Junos Fusion Provider Edge*
- *Configuring or Expanding a Junos Fusion Enterprise*

term (candidate-uplink-policy)

Syntax

```
term term-name{
  from {
    product-model model-name;
    <holddown holddown-time>;
    <minimum-links number-of-links>;
    <uplink-port-group uplink-port-group-name>;
  }
}
```

Hierarchy Level

[edit policy-options satellite-policies candidate-uplink-port-profile *policy-name*]

Release Information

Statement introduced in Junos OS Release 14.2R3.

Description

Create and configure a term in a candidate uplink satellite policy within a Junos Fusion.

A term in a candidate uplink port policy in a Junos Fusion is used to apply an uplink failure detection configuration to certain satellite devices, based on their product model only. The more complex options that are available for other policies in Junos OS—such as the terms available for routing policies—are not available for candidate uplink port policies.

Options

term-name—The user-defined name of the term.

A *term* is a named structure in which match conditions and configuration statements are defined. A candidate uplink policy policy can contain multiple terms. The terms are evaluated in the order they appear in the configuration. The first term that matches a satellite device is applied to that satellite device.

from—The statements under the **from** statement define the satellite device model match criteria and uplink failure detection configuration for the term. Each term can contain only one **from** statement.

The remaining statements are explained separately.

Required Privilege Level

admin—To view this statement in the configuration.
admin-control—To add this statement to the configuration.

Related Documentation

- *Configuring Junos Fusion Provider Edge*
- *Configuring or Expanding a Junos Fusion Enterprise*

uplink-failure-detection (Junos Fusion)

Syntax

```
uplink-failure-detection {
   <candidate-uplink-policy policy-name>;
}
```

Hierarchy Level

[edit chassis satellite-management]
[edit chassis satellite-management fpc *slot-id*]

Release Information

Statement introduced in Junos OS Release 14.2R3.

Description

Enables uplink failure detection in a Junos Fusion.

The uplink failure detection feature on a Junos Fusion enables satellite devices to detect link failures on the uplink interfaces used to connect to aggregation devices. When uplink failure detection detects uplink failure on a satellite device, all of the device's extended ports (which connect to host devices) are shut down. Shutting down the extended ports allows downstream host devices to more quickly identify and adapt to the outage. For example, when a host device is connected to two satellite devices, and uplink failure detection shuts down the extended ports on one satellite device, the host device can more quickly recognize the uplink failure and redirect traffic through the other, active satellite device.

You can configure uplink failure detection in a Junos Fusion for a single satellite device using the **fpc *slot-id*** option. If uplink failure detection is enabled without specifying the **fpc *slot-id*** option, uplink failure detection is enabled for all cascade ports on the aggregation device.

If you enable uplink failure detection without the **candidate-uplink-policy** substatement, the default uplink failure detection settings are applied. To configure non-default uplink failure detection settings, include the **candidate-uplink-policy** substatement. Candidate uplink policies are configured under **[edit policy-options satellite-policies candidate-uplink-port-policy]**.

Default

Uplink failure detection is disabled.

Options

The remaining statements are explained separately.

Required Privilege Level

admin—To view this statement in the configuration.
admin-control—To add this statement to the configuration.

Related Documentation

- *Configuring Junos Fusion Provider Edge*
- *Configuring or Expanding a Junos Fusion Enterprise*

uplink-port-group (Junos Fusion)

Syntax

uplink-port-group *group-name*;

Hierarchy Level

[edit policy-options satellite-policies candidate-uplink-port-profile *profile-name*]
[edit policy-options satellite-policies candidate-uplink-port-profile *profile-name* term *term-name* from]

Release Information

Statement introduced in Junos OS Release 14.2R3.

Description

In Junos Fusion configuration, assign an uplink port group to a candidate uplink port policy.

An uplink port group defines a set of candidate uplink ports that are assigned to satellite devices to which the candidate uplink port group is assigned.

CAUTION: The physically connected uplink ports on a satellite device must be defined as candidate uplink ports in the Junos Fusion configuration. If the uplink ports on a satellite device are not configured as candidate uplink ports, uplink failure detection cannot be enabled on the device, and a system log message is generated.

Uplink port groups are defined under **[edit policy-options satellite-policies port-group-alias]**.

Default

Each satellite device model has a set of default uplink ports (see "Overview of Uplink Failure Detection on a Junos Fusion" on page 1049). You only need to assign an uplink port group to a satellite device if you do not want to use the default uplink ports.

Options

group-name—The name of the port group to assign.

Required Privilege Level

admin—To view this statement in the configuration.
admin-control—To add this statement to the configuration.

Related Documentation

- *Configuring Junos Fusion Provider Edge*
- *Configuring or Expanding a Junos Fusion Enterprise*

show chassis satellite

Syntax

show chassis satellite
[device-alias *device-alias* | fpc-slot *fpc-slot* | cluster *cluster-name*]
[brief | detail | extensive | terse]
<since *time*>

Release Information

Command introduced in Junos OS Release 14.2R3 for Junos Fusion Provider Edge.
Command introduced in Junos OS Release 16.1R1 for Junos Fusion Enterprise.
Command introduced in Junos OS Release 17.2R1 for Junos Fusion Data Center.

Description

Display the status of the satellite device connections in a Junos Fusion.

Options

none—(Same as **brief**) Display satellite device connection information

device-alias *device-alias*—(Optional) Display satellite device connection information for the satellite device using the specified device alias only.

fpc-slot *fpc-slot*—(Optional) Display satellite device connection information for the satellite device using the specified FPC slot number only.

cluster *cluster-name*—(Optional) Display satellite device connection information for the satellite devices in the specified satellite device cluster only.

brief | detail | extensive | terse—(Optional) Display the specified level of output.

since *time*—(Optional) Display the satellite devices that have been added to the Junos Fusion on or after a certain date or time, in *YYYY-MM-DD.HH:MM:SS* format.

To display all satellite devices added since a specified date, enter the specific date. For instance, to display all satellite devices added on or after December 22nd, 2015, enter **2015-12-22** as the *time*.

To display all satellite devices added since a specified time, enter the specific date and time. For instance, to display all satellite devices added on or after 11:01AM on December 22nd, 2015, enter **2015-12-22.11:01:00** as the *time*.

Required Privilege Level

view

Related Documentation

- *Configuring or Expanding a Junos Fusion Enterprise*
- *Configuring Junos Fusion Provider Edge*

List of Sample Output

show chassis satellite detail on page 1075

Output Fields Table 20 on page 683 lists the output fields for the **show chassis satellite** command. Output fields are listed in the approximate order in which they appear.

Table 57: show chassis satellite Output Fields

Field Name	Field Description	Level of Output
Fields for Interface		
Alias	The satellite device's alias. The satellite device's alias is configured using the **set chassis satellite-management fpc *slot-id*** alias ***alias*** statement.	brief extensive none
Slot	The slot number of the satellite device. The slot number can be configured using the **set chassis satellite-management fpc *slot-id*** statement..	brief terse extensive none

Table 57: show chassis satellite Output Fields (continued)

Field Name	Field Description	Level of Output
Device State	The state of the satellite device within the Junos Fusion. The most common device states: • **Online**—the satellite device is online and active. This is the satellite device state during normal operating procedure. • **Offline**—the satellite device is offline and not detected. This state is typically seen when the satellite device has been disconnected from the aggregation device, or when all cascade or uplink ports connecting the satellite device to the aggregation device are down. • **Present**—the satellite device is recognized by the aggregation device, but is not online. This state is typically seen before a satellite device goes online, or while satellite device configuration is in progress or finalizing. • **Rebooting**—the satellite device is rebooting. • **Disable**—the satellite device has been disabled. • **Misconfig**—the satellite device is not properly configured. This state is typically seen when the system ID, cascade port, or FPC slot ID defined for the satellite device has a misconfiguration. • **Miswire**—the satellite device is miswired. This state is typically seen when a satellite device is wired to two aggregation devices but is not configured for multihoming. Use **show chassis satellite detail** to gather more information on the issue when the device state is **Miswire**. Other less common device states include: • **ModeChanging**—the device is converting from a standalone device to a satellite device, or from a satellite device to a standalone device. • **ModeChangeFail**—the mode change operation failed. • **MinorUpgradeOn**—A minor satellite software upgrade is in progress. • **MajorUpgradeOn**—A major satellite software upgrade is in progress. • **Upgrade-pending**—the satellite device is waiting for a satellite software upgrade. • **ProvSessionDn**—the provisioning session is down. • **ReconcileState**—the satellite provisioning daemon has restarted and is reconciling the satellite device state.	brief terse extensive none
Cascade Ports	The cascade port or ports. A cascade port is a port on the aggregation device that connects to a satellite device in a Junos Fusion.	brief extensive none

Table 57: show chassis satellite Output Fields (continued)

Field Name	Field Description	Level of Output
Port State	The state of the cascade port on the aggregation device. Port states include: • **online**—the cascade port is online and active. This is the port state during normal operating procedure. • **txUpRxDn**—Tx or Rx forwarding is disabled on the cascade port. This state is often seen when a second aggregation device is added to a Junos Fusion topology, and the devices in the Junos Fusion are synchronizing to the new topology. • **miswire**—the cascade port is miswired. This state is typically seen when a satellite device is interconnected to two aggregation devices but multihoming is not configured. Use **show chassis satellite detail** to gather more information on the issue when the device state is **Miswire**. • **present**—The cascade port recognized the satellite device and is up. • **misconfig**—the cascade port is assigned, but this interface is not working correctly due to a misconfiguration. • **down**—the cascade port is down. • **offline**—the satellite device was previously recognized from this interface, but is no longer present. • **absent**—the cascade port is configured but no satellite device is detected on the interface.	brief extensive none
Extended Ports Total	The total number of extended ports on the satellite device. An extended port is a network-facing port on the satellite device that sends and receives network traffic for the Junos Fusion.	brief none terse
Extended Ports Up	The number of active extended ports.	brief none terse
Model	The hardware model of the satellite device.	terse
Version	The version of satellite device software running on the satellite device.	terse
Satellite Alias	The satellite device's alias. The satellite device's alias is configured using the **set chassis satellite-management fpc *slot-id*** alias ***alias*** statement.	detail
FPC slot	The FPC slot number of the satellite device. The slot number can be configured using the **set chassis satellite-management fpc *slot-id*** statement.	detail

Table 57: show chassis satellite Output Fields (continued)

Field Name	Field Description	Level of Output
Operational State	The operational state of the satellite device. The state UFDDown indicates that uplink failure detection disabled the satellite device's extended ports due to an uplink port failure.	detail
Product Model	The hardware model of the satellite device.	detail
Product Family	The product family of the satellite device.	detail
Serial number	The serial number of the satellite device.	detail
System ID	The system ID of the satellite device. The system ID is also the satellite device's MAC address.	detail
Software package version	The satellite software version running on the satellite device.	detail
Host software version	The host operating system software version running on the satellite device.	detail
Management Address	The management IP address of the satellite device. This management IP address belongs to an internal routing instance. This management address is assigned by the control plane internally based on FPC slot ID and is used for the control plane traffic between the aggregation device and satellite device. All management in a Junos Fusion should be done through the aggregation device. The management IP address of the satellite device is useful for debugging purposes by expert users only.	detail
UFD config state	Uplink failure detection configuration state.	detail
Minimum link	Uplink failure detection minimum active uplink port setting.	detail
Holdddown timer (seconds)	Uplink failure detection holddown timer setting, in seconds.	detail
UFD operational state	Uplink failure detection operational state.	detail

Table 57: show chassis satellite Output Fields (continued)

Field Name	Field Description	Level of Output
Candidate uplink interfaces (pic/port)	Uplink failure detection candidate uplink interfaces.	detail
Extended Ports	The number of extended ports for the satellite device. The number on the left is the total number of extended ports, and the number on the right is the total number of extended ports currently in the up state.	extensive
When	The date and time of the event.	extensive
Event	The event.	extensive
Action	The actions that resulted from the event.	extensive
Fields for Cascade interfaces		
Interface Name	The name of the cascade interface on the aggregation device.	detail
State	The state of the cascade interface.	detail
Uplink Interface	The name of the uplink interface on the satellite device.	detail
Adjacency state	The adjacency state of the cascade to uplink interface link.	detail
Last transition	The amount of time that has passed since the last transition of the cascade to uplink interface link.	detail
Adjacency down count (Interface Name)	The number of times the cascade to uplink interface link has gone into the down state.	detail
RX Packet	The number of packets received on the cascade interface.	detail
Last received packet	The amount of time that has passed since the last packet was received on the cascade interface.	detail
Peer adjacency information	The amount of time that has passed since the last peer adjacency transition.	detail
Adjacency down count (Peer adjacency information)	The number of times the cascade to uplink interface link has gone into the down state.	detail

Table 57: show chassis satellite Output Fields (continued)

Field Name	Field Description	Level of Output
Last down cause	The cause of the last adjacency failure.	detail
SDPD restart detected	The number of times that the satellite device protocol process has restarted.	detail
Fields for Process information		
Process Name	The name of the process.	detail
PID	The process identification number of the process.	detail
State	The current state of the process.	detail
Number of restart detected	The number of times the process has restarted.	detail
Uptime	The amount of time that the process has been running.	detail

Sample Output

show chassis satellite

```
user@aggregation-device> show chassis satellite
                         Device          Cascade      Port       Extended Ports
Alias            Slot    State           Ports        State      Total/Up
qfx5100-24q-01   100     Online          xe-0/0/1     online     9/2
                                         xe-0/3/0     online
qfx5100-24q-02   101     Online          xe-0/0/2     online     20/12
                                         xe-0/3/1     online
qfx5100-24q-03   102     Online          xe-0/0/3     online     16/6
                                         xe-0/3/2     online
qfx5100-24q-04   103     Online          xe-0/0/4     online     16/4
                                         xe-0/3/3     online
qfx5100-24q-05   104     Online          xe-0/0/5     online     13/3
                                         xe-0/3/4     online
qfx5100-24q-06   105     Online          xe-0/0/6     online     24/15
                                         xe-0/3/5     online
qfx5100-24q-07   106     Online          xe-0/0/7     online     24/15
                                         xe-0/3/6     online
qfx5100-24q-08   107     Online          xe-0/0/8     online     21/12
                                         xe-0/3/7     online
ex4300-01        109     Online          xe-1/0/1     online     49/2
ex4300-02        110     Online          xe-1/0/2     online     49/2
ex4300-03        111     Online          xe-1/0/3     online     49/2
ex4300-04        112     Online          xe-1/0/4     online     49/11
ex4300-05        113     Online          xe-1/0/5     online     49/11
ex4300-06        114     Online          xe-1/0/6     online     49/11
ex4300-07        115     Online          xe-1/0/7     online     49/11
ex4300-08        116     Online          xe-1/1/0     online     49/11
ex4300-09        117     Online          xe-1/1/1     online     49/11
ex4300-10        118     Online          xe-1/1/2     online     49/11
```

```
ex4300-11        119    Online          xe-1/1/3     online     49/11
ex4300-12        120    Online          xe-1/1/4     online     49/11
ex4300-13        121    Online          xe-1/1/5     online     49/11
ex4300-14        122    Online          xe-1/1/6     online     49/11
ex4300-15        123    Online          xe-1/1/7     online     49/11
ex4300-16        124    Online          xe-1/2/1     online     49/11
ex4300-17        125    Online          xe-1/2/2     online     49/11
ex4300-18        126    Online          xe-1/2/3     online     49/2
ex4300-19        127    Online          xe-1/2/4     online     49/1
ex4300-20        128    Online          xe-1/2/5     online     49/1
ex4300-21        129    Online          xe-1/2/6     online     49/1
ex4300-22        130    Online          xe-1/2/7     online     49/1
```

Sample Output

show chassis satellite device-alias

```
user@aggregation-device> show chassis satellite device-alias ex4300-22
                         Device          Cascade      Port       Extended Ports
Alias            Slot    State           Ports        State      Total/Up
    ex4300-22    130     Online          xe-0/2/7     online     49/1
```

Sample Output

show chassis satellite fpc-slot 130

```
user@aggregation-device> show chassis satellite fpc-slot 130
                         Device          Cascade      Port       Extended Ports
Alias            Slot    State           Ports        State      Total/Up
ex4300-22        101     Online          xe-0/0/2     online     20/12
                                         xe-0/3/1     online
```

Sample Output

show chassis satellite terse

```
user@aggregation-device> show chassis satellite terse
       Device                                Extended Ports
Slot   State            Model                Total/Up    Version
101    Online           QFX5100-48S-6Q       7/7          3.0R1.1
102    Online           QFX5100-48S-6Q       7/7          3.0R1.1
103    Online           QFX5100-48S-6Q       6/5          3.0R1.1
104    Online           QFX5100-48S-6Q       14/14        3.0R1.1
105    Online           QFX5100-48S-6Q       18/18        3.0R1.1
106    Online           QFX5100-48S-6Q       17/16        3.0R1.1
107    Online           EX4300-48T           52/6         3.0R1.1
108    Online           EX4300-48T           52/15        3.0R1.1
109    Online           EX4300-48T           51/14        3.0R1.1
110    Online           EX4300-48T           51/14        3.0R1.1
111    Online           EX4300-48T           51/13        3.0R1.1
112    Online           EX4300-48T           51/12        3.0R1.1
113    Online           EX4300-48T           51/13        3.0R1.1
114    Online           QFX5100-24Q-2P       17/13        3.0R1.1
```

show chassis satellite detail

```
user@aggregation-device> show chassis satellite detail
Satellite Alias: qfx5100-48s-02
FPC Slot: 101
```

```
Operational State: Online
Product Model: QFX5100-48S-6Q
Product Family: i386
Serial number: ABC123DEF456
System id: 00:11:22:aa:bb:cc
Software package version: 3.0R1.1
Host software version: 1.0.0
Management Address: 172.16.0.101/32
Cascade interfaces:
    Interface Name: xe-0/0/2 State: online
        Uplink Interface: xe-001/0/48:0
        Adjacency state: Two-Way
        Last transition: 00:10:22
        Adjacency down count: 0
        Rx Packet: 65 Last received packet: 00:00:02
        Peer adjacency information: 00:10:22
            Adjacency down count: 3
            Last down cause: Interface Down
            SDPD restart detected: 3
    Interface Name: xe-0/2/1 State: online
        Uplink Interface: xe-001/0/48:1
        Adjacency state: Two-Way
        Last transition: 00:10:22
        Adjacency down count: 0
        Rx Packet: 64 Last received packet: 00:00:02
        Peer adjacency information: 00:10:22
            Adjacency down count: 3
            Last down cause: Interface Down
            SDPD restart detected: 3
    Interface Name: xe-2/0/0 State: online
        Uplink Interface: xe-001/0/48:2
        Adjacency state: Two-Way
        Last transition: 00:10:22
        Adjacency down count: 0
        Rx Packet: 65 Last received packet: 00:00:02
        Peer adjacency information: 00:10:22
            Adjacency down count: 3
            Last down cause: Interface Down
            SDPD restart detected: 3
    Interface Name: xe-2/1/6 State: online
        Uplink Interface: xe-001/0/48:3
        Adjacency state: Two-Way
        Last transition: 00:10:22
        Adjacency down count: 0
        Rx Packet: 65 Last received packet: 00:00:02
        Peer adjacency information: 00:10:22
            Adjacency down count: 3
            Last down cause: Hold timer expire
            SDPD restart detected: 3
Process information:
    Process Name: Provisioning PID: 6716 State: Running
        Number of restart detected: 0
        Uptime: 00:10:22
    Process Name: PFE PID: 3194 State: Running
        Number of restart detected: 0
        Uptime: 00:10:22
UFD config state: Enable (persist), Minimum link: 1,
Holdddown timer (seconds): 6
UFD operational state: Enable
Candidate uplink interfaces (pic/port):
        1/0
```

```
        1/1
        1/2
        1/3
        2/0
        2/1
        2/2
        2/3

Satellite Alias: qfx5100-48s-03
FPC Slot: 102
Operational State: Online
Product Model: QFX5100-48S-6Q
Product Family: i386
Serial number: ABCDEFG12345
System id: 00:11:22:aa:ba:cc
Software package version: 3.0R1.1
Host software version: 1.0.0
Management Address: 172.16.0.102/32
Cascade interfaces:
    Interface Name: xe-0/0/3 State: online
        Uplink Interface: xe-002/0/48:0
        Adjacency state: Two-Way
        Last transition: 00:10:22
        Adjacency down count: 0
        Rx Packet: 65 Last received packet: 00:00:02
        Peer adjacency information: 00:10:22
            Adjacency down count: 3
            Last down cause: Interface Down
            SDPD restart detected: 3
    Interface Name: xe-0/2/2 State: online
        Uplink Interface: xe-002/0/48:1
        Adjacency state: Two-Way
        Last transition: 00:10:22
        Adjacency down count: 0
        Rx Packet: 65 Last received packet: 00:00:02
        Peer adjacency information: 00:10:22
            Adjacency down count: 3
            Last down cause: Interface Down
            SDPD restart detected: 3
    Interface Name: xe-2/0/1 State: online
        Uplink Interface: xe-002/0/48:2
        Adjacency state: Two-Way
        Last transition: 00:10:22
        Adjacency down count: 0
        Rx Packet: 65 Last received packet: 00:00:02
        Peer adjacency information: 00:10:22
            Adjacency down count: 3
            Last down cause: Interface Down
            SDPD restart detected: 3
    Interface Name: xe-2/1/7 State: online
        Uplink Interface: xe-002/0/48:3
        Adjacency state: Two-Way
        Last transition: 00:10:22
        Adjacency down count: 0
        Rx Packet: 65 Last received packet: 00:00:02
        Peer adjacency information: 00:10:22
            Adjacency down count: 3
            Last down cause: Interface Down
            SDPD restart detected: 3
Process information:
    Process Name: Provisioning PID: 6667 State: Running
```

```
        Number of restart detected: 0
        Uptime: 00:10:22
    Process Name: PFE PID: 3155 State: Running
        Number of restart detected: 0
        Uptime: 00:10:22
<additional output removed for brevity>
```