Junos® OS

System Basics: Getting Started Configuration Guide

Release
13.1

Published: 2013-02-22

Juniper Networks, Inc.
1194 North Mathilda Avenue
Sunnyvale, California 94089
USA
408-745-2000
www.juniper.net

Junos® OS System Basics: Getting Started Configuration Guide
13.1

The information in this document is current as of the date on the title page.

YEAR 2000 NOTICE

Juniper Networks hardware and software products are Year 2000 compliant. Junos OS has no known time-related limitations through the year 2038. However, the NTP application is known to have some difficulty in the year 2036.

END USER LICENSE AGREEMENT

The Juniper Networks product that is the subject of this technical documentation consists of (or is intended for use with) Juniper Networks software. Use of such software is subject to the terms and conditions of the End User License Agreement ("EULA") posted at http://www.juniper.net/support/eula.html. By downloading, installing or using such software, you agree to the terms and conditions of that EULA.

Table of Contents

Part 4 Index

List of Figures

List of Tables

About the Documentation

Documentation and Release Notes

To obtain the most current version of all Juniper Networks® technical documentation, see the product documentation page on the Juniper Networks website at http://www.juniper.net/techpubs/.

If the information in the latest release notes differs from the information in the documentation, follow the product Release Notes.

Juniper Networks Books publishes books by Juniper Networks engineers and subject matter experts. These books go beyond the technical documentation to explore the nuances of network architecture, deployment, and administration. The current list can be viewed at http://www.juniper.net/books.

Supported Platforms

For the features described in this document, the following platforms are supported:

- ACX Series
- M Series
- MX Series
- T Series
- J Series
- PTX Series

Using the Examples in This Manual

If you want to use the examples in this manual, you can use the **load merge** or the **load merge relative** command. These commands cause the software to merge the incoming configuration into the current candidate configuration. The example does not become active until you commit the candidate configuration.

If the example configuration contains the top level of the hierarchy (or multiple hierarchies), the example is a *full example*. In this case, use the **load merge** command.

If the example configuration does not start at the top level of the hierarchy, the example is a *snippet*. In this case, use the **load merge relative** command. These procedures are described in the following sections.

Merging a Full Example

To merge a full example, follow these steps:

1. From the HTML or PDF version of the manual, copy a configuration example into a text file, save the file with a name, and copy the file to a directory on your routing platform.

   For example, copy the following configuration to a file and name the file **ex-script.conf**. Copy the **ex-script.conf** file to the **/var/tmp** directory on your routing platform.

   ```
   system {
     scripts {
       commit {
         file ex-script.xsl;
       }
     }
   }
   interfaces {
     fxp0 {
       disable;
       unit 0 {
         family inet {
           address 10.0.0.1/24;
         }
       }
     }
   }
   ```

2. Merge the contents of the file into your routing platform configuration by issuing the **load merge** configuration mode command:

   ```
   [edit]
   user@host# load merge /var/tmp/ex-script.conf
   load complete
   ```

Merging a Snippet

To merge a snippet, follow these steps:

1. From the HTML or PDF version of the manual, copy a configuration snippet into a text file, save the file with a name, and copy the file to a directory on your routing platform.

   For example, copy the following snippet to a file and name the file **ex-script-snippet.conf**. Copy the **ex-script-snippet.conf** file to the **/var/tmp** directory on your routing platform.

   ```
   commit {
     file ex-script-snippet.xsl; }
   ```

2. Move to the hierarchy level that is relevant for this snippet by issuing the following configuration mode command:

   ```
   [edit]
   user@host# edit system scripts
   [edit system scripts]
   ```

3. Merge the contents of the file into your routing platform configuration by issuing the **load merge relative** configuration mode command:

   ```
   [edit system scripts]
   user@host# load merge relative /var/tmp/ex-script-snippet.conf
   load complete
   ```

For more information about the **load** command, see the CLI User Guide.

Documentation Conventions

Table 1 on page xv defines notice icons used in this guide.

Table 1: Notice Icons

Icon	Meaning	Description
	Informational note	Indicates important features or instructions.
	Caution	Indicates a situation that might result in loss of data or hardware damage.
	Warning	Alerts you to the risk of personal injury or death.
	Laser warning	Alerts you to the risk of personal injury from a laser.

Table 2 on page xvi defines the text and syntax conventions used in this guide.

Table 2: Text and Syntax Conventions

Convention	Description	Examples
Bold text like this	Represents text that you type.	To enter configuration mode, type the**configure** command: user@host> **configure**
`Fixed-width text like this`	Represents output that appears on the terminal screen.	`user@host>` **show chassis alarms** `No alarms currently active`
Italic text like this	• Introduces or emphasizes important new terms. • Identifies book names. • Identifies RFC and Internet draft titles.	• A policy *term* is a named structure that defines match conditions and actions. • *Junos OS System Basics Configuration Guide* • RFC 1997, *BGP Communities Attribute*
Italic text like this	Represents variables (options for which you substitute a value) in commands or configuration statements.	Configure the machine's domain name: [edit] root@# **set system domain-name** *domain-name*
Text like this	Represents names of configuration statements, commands, files, and directories; configuration hierarchy levels; or labels on routing platform components.	• To configure a stub area, include the **stub** statement at the**[edit protocols ospf area area-id]** hierarchy level. • The console port is labeled **CONSOLE**.
< > (angle brackets)	Enclose optional keywords or variables.	**stub <default-metric *metric*>;**
| (pipe symbol)	Indicates a choice between the mutually exclusive keywords or variables on either side of the symbol. The set of choices is often enclosed in parentheses for clarity.	**broadcast | multicast** **(*string1* | *string2* | *string3*)**
# (pound sign)	Indicates a comment specified on the same line as the configuration statement to which it applies.	**rsvp { # Required for dynamic MPLS only**
[ ] (square brackets)	Enclose a variable for which you can substitute one or more values.	**community name members [*community-ids*]**

Indention and braces ({ })	Identify a level in the configuration hierarchy.	[edit]
		routing-options {
		static {
		route default {
		nexthop *address*;
		retain;
		}
		}
		}

; (semicolon)	Identifies a leaf statement at a configuration hierarchy level.	

J-Web GUI Conventions

Table 2: Text and Syntax Conventions *(continued)*

Convention	Description	Examples
Bold text like this	Represents J-Web graphical user interface (GUI) items you click or select.	• In the Logical Interfaces box, select **All Interfaces**. • To cancel the configuration, click **Cancel**.
> (bold right angle bracket)	Separates levels in a hierarchy of J-Web selections.	In the configuration editor hierarchy, select **Protocols>Ospf**.

Documentation Feedback

We encourage you to provide feedback, comments, and suggestions so that we can improve the documentation. You can send your comments to **techpubs-comments@juniper.net**, or fill out the documentation feedback form at https://www.juniper.net/cgi-bin/docbugreport/ . If you are using e-mail, be sure to include the following information with your comments:

- Document or topic name
- URL or page number
- Software release version (if applicable)

Requesting Technical Support

Technical product support is available through the Juniper Networks Technical Assistance Center (JTAC). If you are a customer with an active J-Care or JNASC support contract, or are covered under warranty, and need post-sales technical support, you can access our tools and resources online or open a case with JTAC.

- JTAC policies—For a complete understanding of our JTAC procedures and policies, review the *JTAC User Guide* located at http://www.juniper.net/us/en/local/pdf/resource-guides/7100059-en.pdf.
- Product warranties—For product warranty information, visit http://www.juniper.net/support/warranty/.
- JTAC hours of operation—The JTAC centers have resources available 24 hours a day, 7 days a week, 365 days a year.

Self-Help Online Tools and Resources

For quick and easy problem resolution, Juniper Networks has designed an online self-service portal called the Customer Support Center (CSC) that provides you with the following features:

- Find CSC offerings: http://www.juniper.net/customers/support/
- Search for known bugs: http://www2.juniper.net/kb/

- Find product documentation: http://www.juniper.net/techpubs/
- Find solutions and answer questions using our Knowledge Base: http://kb.juniper.net/
- Download the latest versions of software and review release notes: http://www.juniper.net/customers/csc/software/
- Search technical bulletins for relevant hardware and software notifications: https://www.juniper.net/alerts/
- Join and participate in the Juniper Networks Community Forum: http://www.juniper.net/company/communities/
- Open a case online in the CSC Case Management tool: http://www.juniper.net/cm/

To verify service entitlement by product serial number, use our Serial Number Entitlement (SNE) Tool: https://tools.juniper.net/SerialNumberEntitlementSearch/

Opening a Case with JTAC

You can open a case with JTAC on the Web or by telephone.

- Use the Case Management tool in the CSC at http://www.juniper.net/cm/.
- Call 1-888-314-JTAC (1-888-314-5822 toll-free in the USA, Canada, and Mexico).

For international or direct-dial options in countries without toll-free numbers, see http://www.juniper.net/support/requesting-support.html.

PART 1

Overview

CHAPTER 1

Junos OS Overview

Junos OS Overview

Juniper Networks provides high-performance network routers that create a responsive and trusted environment for accelerating the deployment of services and applications over a single network. he Junos operating system (Junos OS) is the foundation of these high-performance networks. Unlike other complex, monolithic software architectures, Junos OS incorporates key design and developmental differences to deliver increased network availability, operational efficiency, and flexibility. These key advantages are:

- One operating system
- One software release
- One modular software architecture

One Operating System

Unlike other network operating systems that share a common name but splinter into many different programs, the Junos© operating system is a single, cohesive operating system that is shared across all routers and product lines. This enables Juniper Networks engineers to develop software features once and share the features across all product lines simultaneously. Because features are common to a single source, generally these features are implemented the same way for all the product lines, thus reducing the training required to learn different tools and methods for each product. Furthermore, because all Juniper Networks products use the same code base, interoperability among products is not an issue.

One Software Release

Each new version of Junos OS is released concurrently for all product lines following a preset schedule. Each new version of software must include all working features released in previous releases of the software and must achieve zero critical regression errors. This discipline ensures reliable operations for the entire release.

One Modular Software

Although individual modules of the Junos OS communicate through well-defined interfaces, each module runs in its own protected memory space, preventing one module from disrupting another. It also enables the independent restart of each module as necessary. This is in contrast to monolithic operating systems for which a malfunction in one module can ripple to others and cause a full system crash or restart. This modular architecture then provides for a high level of performance, high availability, security, and device scalability not found in other operating systems.

The Junos OS is preinstalled on your Juniper Networks router when you receive it from the factory. Thus, when you first power on the router, all software starts automatically. You simply need to configure the software so that the router can participate in the network.

You can upgrade the router software as new features are added or software problems are fixed. You normally obtain new software by downloading the images from the Juniper Networks Support Web page onto your router or onto another system on your local network. Then you install the software upgrade onto the router.

Juniper Networks routers run only binaries supplied by Juniper Networks. Each Junos OS image includes a digitally signed manifest of executables, which are registered with the system only if the signature can be validated. Junos OS will not execute any binary without a registered fingerprint. This feature protects the system against unauthorized software and activity that might compromise the integrity of your router.

Related Documentation

- Junos OS Configuration Basics on page 5
- Junos OS Architecture Overview on page 5
- Router Hardware Components on page 8
- Junos OS Commit Model for Router or Switch Configuration on page 9
- Junos OS Routing Engine Components and Processes on page 10
- Junos OS Support for IPv4 Routing Protocols on page 21

- Junos OS Support for IPv6 Routing Protocols on page 22
- Junos OS Routing and Forwarding Tables on page 23
- Routing Policy Overview on page 24
- Junos OS Support for VPNs on page 25

Junos OS Configuration Basics

Your router comes with Junos OS installed on it. When you power on the router, all software starts automatically. You simply need to configure the software so that the router will be ready to participate in the network.

To configure the Junos OS, you must specify a hierarchy of configuration statements that define the preferred software properties. You can configure all properties of the Junos OS, including interfaces, general routing information, routing protocols, and user access, as well as some system hardware properties. After you have created a candidate configuration, you commit the configuration to be evaluated and activated by the Junos OS.

Related Documentation

- Junos OS Configuration from External Devices on page 25
- Methods for Configuring Junos OS on page 36
- Initial Router or Switch Configuration Using the Junos OS on page 43

Junos OS Architecture Overview

This topic provides an overview of the Junos OS product and routing process architecture:

- Product Architecture on page 5
- Routing Process Architecture on page 6

Product Architecture

The Junos OS provides IP routing protocol software as well as software for interface, network, and chassis management. The Junos OS runs on all Juniper Networks J Series, M Series, MX Series, and T Series routers.

- J Series Services Routers (J2300, J4300, and J6300) are deployed at the remote edge of distributed networks.
- Most M Series routers are deployed in small and medium cores in peering, route reflector, data center applications; or at the IP or Multiprotocol Label Switching (MPLS) edge to support high-performance Layer 2 and Layer 3 services. All M Series routers have redundant power and cooling and the M10i, M20, M40e, M120, M160, and M320 routers have fully redundant hardware, including Routing Engines, switch interface components, and packet forwarding components. The M120 router also supports Forwarding Engine Board (FEB) failover. In the event of a FEB failure, a backup FEB can quickly take over packet forwarding.

- The MX Series 3D Universal Edge Routers are Ethernet-optimized edge routers that provide both switching and carrier-class Ethernet routing. The MX Series routers support two types of Dense Port Concentrators (DPCs) with built-in Ethernet ports: Gigabit Ethernet 40-port and 10-Gigabit Ethernet 4-port.
- T Series routers (T320, T640, T1600, T4000, TX Matrix, and TX Matrix Plus routers) are deployed at the core of provider networks. These routers have fully redundant hardware, including power and cooling, Routing Engines, and Switch Interface Boards.

  A *routing matrix* is a multichassis architecture composed of the combinations listed below. From the perspective of the user interface, the routing matrix appears as a single router. On a routing matrix composed of a TX Matrix router and T640 routers, the TX Matrix router controls all the T640 routers. On a routing matrix composed of a TX Matrix Plus router and T1600 or T4000 routers, the TX Matrix Plus router controls all the T1600 routers.

Routing Process Architecture

The routing process is handled by the following two components (see Figure 1 on page 7):

- Routing Engine
- Packet Forwarding Engine

Because this architecture separates control operations such as routing updates and system management from packet forwarding, the router can deliver superior performance and highly reliable Internet operation.

Figure 1: Product Architecture

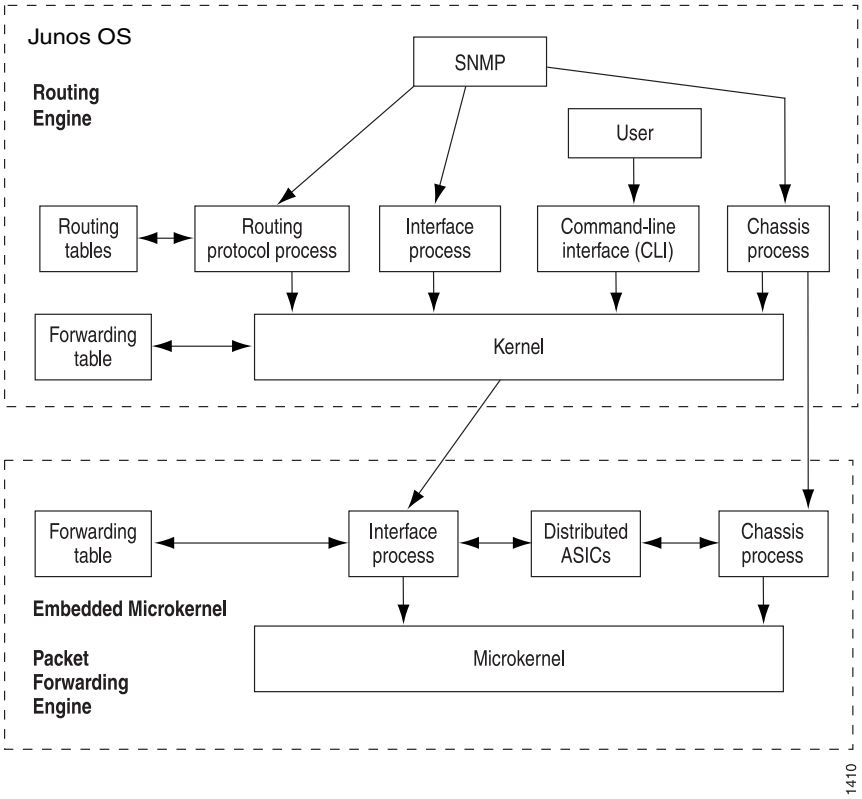

Packet Forwarding Engine

The Packet Forwarding Engine uses application-specific integrated circuits (ASICs) to perform Layer 2 and Layer 3 packet switching, route lookups, and packet forwarding. The Packet Forwarding Engine forwards packets between input and output interfaces. The M Series routers (except the M7i, M40, and M320 routers) have redundant Packet Forwarding Engines. The J Series Services Routers have a software-based Packet Forwarding Engine.

Routing Engine

The Routing Engine controls the routing updates and system management. The Routing Engine consists of routing protocol software processes running inside a protected memory environment on a general-purpose computer platform. The Routing Engine handles all the routing protocol processes and other software processes that control the routers' interfaces, some of the chassis components, system management, and user access to the router. These routers and software processes run on top of a kernel that interacts with the Packet Forwarding Engine. All M Series (except the M7i and M40) routers and T Series routers have redundant Routing Engines.

The Routing Engine has these features:

- Routing protocol packets processing—All routing protocol packets from the network are directed to the Routing Engine, and therefore do not delay the Packet Forwarding Engine unnecessarily.
- Software modularity—Software functions have been divided into separate processes, so a failure of one process has little or no effect on other software processes.
- In-depth IP functionality—Each routing protocol is implemented with a complete set of IP features and provides full flexibility for advertising, filtering, and modifying routes. Routing policies are set according to route parameters, such as prefix, prefix lengths, and Border Gateway Protocol (BGP) attributes.
- Scalability—The Junos routing tables are designed to hold all the routes used in current and near-future networks. Additionally, the Junos OS can efficiently support large numbers of interfaces and virtual circuits.
- Management interfaces—System management is possible with a command-line interface (CLI), a craft interface, and Simple Network Management Protocol (SNMP).
- Storage and change management—Configuration files, system images, and microcode can be held and maintained in one primary and two secondary storage systems, permitting local or remote upgrades.
- Monitoring efficiency and flexibility—Alarms can be generated and packets can be counted without adversely affecting packet forwarding performance.

The Routing Engine constructs and maintains one or more routing tables. From the routing tables, the Routing Engine derives a table of active routes, called the *forwarding table*, which is then copied into the Packet Forwarding Engine. The forwarding table in the Packet Forwarding Engine can be updated without interrupting the router's forwarding.

In a Junos-FIPS environment, hardware configurations with two Routing Engines must use IPsec and a private routing instance for all communications between the Routing Engines. IPsec communication between the Routing Engines and Adaptive Services (AS) II FIPS PICs is also required.

Related Documentation

- Junos OS Overview on page 3
- Routing Matrix with TX Matrix and TX Matrix Plus

Router Hardware Components

The Junos OS runs on the following types of Juniper Networks routers and Packet Transport Switches: ACX Series, J Series, M Series, MX Series, T Series, and PTX Series Packet Transport Switches. Each network device consists of the major hardware components as shown in Table 3 on page 9. One or more of the major hardware components shown is used in each system.

NOTE: The ACX Series router is a single-board router with a built-in Routing Engine and one Packet Forwarding Engine. The “pseudo” FPCs and PICs are described in ACX2000 and ACX2100 Routers Hardware and CLI Terminology Mapping

Table 3: Major Router Hardware Components

	M Series	MX Series	T Series	PTX Series	J Series
Routing Engines	X	X	X	X	X
Control Board	X		X	X	
Switch Interface Board (SIB)	X		X	X	
Forwarding Engine Board (FEB)	X				
Power Supply	X	X	X	X	X
Cooling System	X	X	X	X	X
Dense Port Concentrators (DPC)		X			
Switch Control Board (SCB)		X			
Flexible PIC Concentrators (FPC)	X	X	X	X	
Physical Interface Module (PIM)					X
Physical Interface Card (PIC)	X	X	X	X	

Flexible PIC Concentrators (FPCs) are each populated by PICs for various interface types. On some routers, the PICs are installed directly in the chassis.

For information about specific components in your router, see the hardware guide for your router.

Related Documentation

- Junos OS Architecture Overview on page 5

Junos OS Commit Model for Router or Switch Configuration

The router or switch configuration is saved using a commit model: that is, a candidate configuration is modified as desired and then committed to the system. Once a configuration has been committed, the router or switch checks the configuration for syntax errors, and if no errors are found, the configuration is saved as **juniper.conf.gz** and activated. The former active configuration file is saved as the first rollback configuration

file (**juniper.conf.1.gz**), and all other rollback configuration files are incremented by 1. For example, **juniper.conf.1.gz** is incremented to **juniper.conf.2.gz**, making it the second rollback configuration file. The router or switch can have a maximum of 49 rollback configurations (1–49) saved on the system.

On the router or switch, the active configuration file and the first three rollback files (**juniper.conf.gz.1, juniper.conf.gz.2, juniper.conf.gz.3**) are located in the **/config** directory. If the file **rescue.conf.gz** is saved on the system, this file should also be saved in the **/config** directory. The factory default files are located in the **/etc/config** directory.

There are two mechanisms used to propagate the configurations between Routing Engines within a router or switch:

- Synchronization—Propagates a configuration from one Routing Engine to a second Routing Engine within the same router or switch chassis.

  NOTE: **The QFX3500 switch has only one Routing Engine.**

  To synchronize configurations, use the **commit synchronize** CLI command. If one of the Routing Engines is locked, the synchronization fails. If synchronization fails because of a locked configuration file, you can use the **commit synchronize force** command. This command overrides the lock and synchronizes the configuration files.

- Distribution—Propagates a configuration across the routing plane on a multichassis router or switch. Distribution occurs automatically. There is no user command available to control the distribution process. If a configuration is locked during a distribution of a configuration, the locked configuration does not receive the distributed configuration file, so the synchronization fails. You need to clear the lock before the configuration and resynchronize the routing planes.

  NOTE: **When you use the commit synchronize force CLI command on a multichassis platform, the forced synchronization of the configuration files does not affect the distribution of the configuration file across the routing plane. If a configuration file is locked on a router or switch remote from the router or switch where the command was issued, the synchronization fails on the remote router or switch. You need to clear the lock and reissue the synchronization command.**

Related Documentation

- Configuring Junos OS for the First Time on a Router or Switch with a Single Routing Engine on page 51

Junos OS Routing Engine Components and Processes

The Junos OS runs on the Routing Engine. The Junos OS consists of software processes that support Internet routing protocols, control router interfaces and the router chassis, and enable router system management. The Junos OS processes run on top of a kernel,

which enables communication between processes and provides a direct link to the Packet Forwarding Engine software. The Junos OS can be used to configure routing protocols and router interface properties, as well as to monitor and troubleshoot protocol and network connectivity problems.

The Routing Engine software consists of several software processes that control router functionality and a kernel that provides the communication among all the processes:

Routing Engine Kernel

The Routing Engine kernel provides the underlying infrastructure for all Junos OS processes. In addition, it provides the link between the routing tables and the Routing Engine's forwarding table. It is also responsible for all communication with the Packet Forwarding Engine, which includes keeping the Packet Forwarding Engine's copy of the forwarding table synchronized with the master copy in the Routing Engine.

Initialization Process

Within the Junos OS, an initialization process (init) starts and monitors all the other software processes when the router boots.

If a software process terminates or fails to start when called, the init process attempts to restart it a limited number of times and logs any failure information for further investigation.

Management Process

The management process (mgd) manages the configuration of the router and all user commands. The management process is responsible for notifying other processes when a new configuration is committed. A dedicated management process handles Junos XML protocol XML requests from its client, which may be the command-line interface (CLI) or any Junos XML protocol client.

Process Limits

There are limits to the total number of Junos OS processes that can run simultaneously on a system. There are also limits set for the maximum number of iterations of any single process. The limit for iterations of any single process can only be reached if the limit of overall system processes is not exceeded.

Access methods such as telnet and SSH spawn multiple system processes for each session created. For this reason, it might not be possible to simultaneously support the maximum number of access sessions for multiple services.

Routing Protocol Process

Within the Junos OS, the routing protocol process (rpd) controls the routing protocols that run on the router. The rpd process starts all configured routing protocols and handles all routing messages. It maintains one or more routing tables, which consolidate the routing information learned from all routing protocols. From this routing information, the routing protocol process determines the active routes to network destinations and installs these routes into the Routing Engine's forwarding table. Finally, it implements routing policy, which enables you to control the routing information that is transferred between

the routing protocols and the routing table. Using routing policy, you can filter and limit the transfer of information as well as set properties associated with specific routes.

Interface Process

The Junos interface process enables you to configure and control the physical interface devices and logical interfaces present in a router. You can configure interface properties such as the interface location (which slot the Flexible PIC Concentrator [FPC] is installed in and which location on the FPC the Physical Interface Card [PIC] is installed in), the interface encapsulation, and interface-specific properties. You can configure the interfaces currently present in the router, as well as interfaces that are not present but that you might add later.

The Junos interface process communicates through the Junos kernel with the interface process in the Packet Forwarding Engine, enabling the Junos OS to track the status and condition of the router's interfaces.

Chassis Process

The Junos chassis process enables you to configure and control the properties of the router, including conditions that trigger alarms. The chassis process (chassisd) on the Routing Engine communicates directly with its peer processes running on the Packet Forwarding Engine.

SNMP and MIB II Processes

The Junos OS supports the Simple Network Management Protocol (SNMP), which helps administrators monitor the state of a router. The software supports SNMP version 1 (SNMPv1), version 2 (SNMPv2, also known as version 2c, or v2c), and version 3 (SNMPv3). The Junos implementation of SNMP does not include any of the security features that were originally included in the IETF SNMP drafts but were later dropped. The SNMP software is controlled by the Junos SNMP and Management Information Base II (MIB II) processes, which consist of an SNMP master agent and various subagents.

Related Documentation

- Junos OS Architecture Overview on page 5

Understanding the Junos Configuration Groups

This topic provides you an overview of the configuration groups feature and the inheritance model in Junos OS, and contains the following sections:

Configuration Groups Overview

The configuration groups feature in Junos OS enables you to create a group containing configuration statements and to direct the inheritance of that group's statements in the rest of the configuration. The same group can be applied to different sections of the

configuration, and different sections of one group's configuration statements can be inherited in different places in the configuration.

Configuration groups enable you to create smaller, more logically constructed configuration files, making it easier to configure and maintain Junos OS. For example, you can group statements that are repeated in many places in the configuration, such as when configuring interfaces, and thereby limit updates to just the group.

You can also use wildcards in a configuration group to allow configuration data to be inherited by any object that matches a wildcard expression.

The configuration group mechanism is separate from the grouping mechanisms used elsewhere in the configuration, such as BGP groups. Configuration groups provide a generic mechanism that can be used throughout the configuration but that are known only to Junos OS command-line interface (CLI). The individual software processes that perform the actions directed by the configuration receive the expanded form of the configuration; they have no knowledge of configuration groups.

Inheritance Model

Configuration groups use true inheritance, which involves a dynamic, ongoing relationship between the source of the configuration data and the target of that data. Data values changed in the configuration group are automatically inherited by the target. The target need not contain the inherited information, although the inherited values can be overridden in the target without affecting the source from which they were inherited.

This inheritance model allows you to see only the instance-specific information without seeing the inherited details. A command pipe in configuration mode allows you to display the inherited data.

Configuring Configuration Groups

For areas of your configuration to inherit configuration statements, you must first put the statements into a configuration group and then apply that group to the levels in the configuration hierarchy that require the statements.

To configure configuration groups and inheritance, you can include the **groups** statement at the **[edit]** hierarchy level:

```
[edit]
groups {
  group-name {
    configuration-data;
  }
}
```

Include the **apply-groups [** *group-names* **]** statement anywhere in the configuration that the configuration statements contained in a configuration group are needed.

Related Documentation

- Creating a Junos Configuration Group on page 97

Using Conditions to Apply Configuration Groups Overview

You can use the **when** statement at the **[edit groups *group-name*]** hierarchy level to define conditions under which a configuration group should be applied.

You can configure a group to be applied based on the type of chassis, model, or routing-engine, virtual chassis member, cluster node, and start and optional end time of day or date.

For example, you could use the **when** statement to create a generic configuration group for each type of node and then apply the configuration based on certain node properties, such as chassis or model.

Related Documentation

- Example: Configuring Conditions for Applying Configuration Groups on page 101

List of Junos OS Processes

Junos OS consists of multiple processes that run on different platforms and have unique functions. The separation of functions provides operational stability, because each process accesses its own protected memory space.

Table 4 on page 14 describes the processes that run only on MX Series 3D Universal Edge Routers.

Table 4: Junos OS Processes on MX Series Platform Only

Process	Name	Description
Clksync process (RE)	clksyncd	Defines the operation of synchronous Ethernet and Precision Time Protocol (PTP) on a Juniper MX Series router. The operation includes communication with the Packet Forwarding Engine (clock-sync module) to program and process clock events from the EEC clock. Operates the PTP stack, exchanges packets, and handles the configuration changes for the modular MX Series (MX80). Controls the configuration and monitoring of the overall operation of the PTP functionality for chassis-based MX platforms (MX240, MX480, and so on).
Clock-sync process (PFE)	clock-sync	Programs and monitors the modular interface card (MIC), the CPLD, and the EEC clock. Peer of the clksyncd process module. Captures all PTP and Synchronous Ethernet statistics on the Packet Forwarding Engine and provides them to the Routing Engine.

Table 4: Junos OS Processes on MX Series Platform Only *(continued)*

Process	Name	Description
Interchassis communication process	iccpd	Exchanges proprietary Junos OS messages between two Juniper MX Series routers that take part in a multi-chassis link aggregation group (LAG).
Statistics agent process	stats-agentd	Acts as a relay process to collect interface statistics for all software development kit (SDK) applications. Interacts with the pfed process to collect the logical interface statistics for SDK applications.

Table 5 on page 15 lists all the other processes that are common across platforms.

Table 5: Junos OS Processes

Name	Process	Description
Adaptive services process	adaptive-services	Manages the configuration for stateful firewall, Network Address Translation (NAT), intrusion detection service (IDS), and IP Security (IPsec) services on the Adaptive Services PIC.
Alarm control process	alarm-control	Configures the system alarm.
Access Node Control Protocol (ANCP) process	ancpd-service	Works with a special Internet Group Management Protocol (IGMP) session to collect outgoing interface mapping events in a scalable manner.
Application identification process	application-identification	Identifies an application using intrusion detection and prevention (IDP) to allow or deny traffic based on applications running on standard or nonstandard ports.
RADIUS accounting process	audit-process	Gathers statistical data that can be used for general network monitoring, analyzing, and tracking usage patterns, for billing a user based upon the amount of time or type of services accessed.
Auto-configuration process	auto-configuration	Configures interfaces automatically.
Boot process	bootp	Enables a router, switch, or interface to act as a Dynamic Host Configuration Protocol (DHCP) or bootstrap protocol (BOOTP) relay agent. DHCP relaying is disabled.
Captive portal content delivery process	captive-portal-content-delivery	Specifies the location to which a subscriber's initial Web browser session is redirected, enabling initial provisioning and service selection for the subscriber.

Table 5: Junos OS Processes *(continued)*

Name	Process	Description
Universal Edge Layer 2 Tunneling Protocol process	ce-l2tp-service	(M10, M10i, M7i, and MX Series routers only) Establishes L2TP tunnels and Point-to-Point Protocol (PPP) sessions through L2TP tunnels.
Ethernet OAM connectivity fault management process	cfm	Monitors the physical link between two switches.
Chassis control process	chassis-control	Manages the chassis.
Class of service process	class-of-service	Controls the router's or switch's CoS configuration.
Ethernet clock synchronization process	clksyncd-service	Uses Synchronous Ethernet (SyncE) for external clock synchronization .
Craft interface I/O control process	craft-control	Controls the I/O of the craft interface.
Database replication process	database-replication	(EX Series switches and MX Series routers only) Manages the replication of updates from the master to the slave in the database management system.
Datapath trace process	datapath-trace-service	Traces the path taken by the packet through the network.
Dynamic Host Configuration Protocol process	dhcp-service	(EX Series switches and MX Series routers only) Enables a DHCP server to allocate network IP addresses and deliver configuration settings to client hosts without user intervention.
Diameter process	diameter-service	Implements the Diameter protocol which uses the Transmission Control Protocol (TCP) and Stream Control Transmission Protocol (SCTP) instead of User Datagram Protocol (UDP), for monitoring the network.
Disk monitoring process	disk-monitoring	Checks the health of the hard disk drive on the Routing Engine.
Dynamic flow capture (DFC) process	dynamic-flow-capture	Controls the DFC configurations on Monitoring Services III PICs.
ECC parity errors logging process	ecc-error-logging	Logs the ECC parity errors into the memory on the Routing Engine.
Connectivity fault management (CFM) process	ethernet-connectivity-fault-management	Provides IEEE 802.1ag OAM CFM database information for CFM maintenance association end points (MEPs) in a CFM session.
Ethernet OAM Link-Fault-Management process	ethernet-link-fault-management	(EX Series switches and MX Series routers only) Provides the OAM link fault management (LFM) information for Ethernet interfaces.

Table 5: Junos OS Processes *(continued)*

Name	Process	Description
Event processing process	event-processing or eventd	Configures the application to handle all generated events.
Firewall process	firewall	Manages the firewall configuration and enables accepting or rejecting packets that are transiting an interface on a router or switch.
General authentication process	general-authentication-service	(EX Series switches and MX Series routers only) Manages general authentication of a user.
Inter-Chassis Communication Protocol (ICCP) process	iccp-service	Synchronizes data within a set of two (or more) PEs that form a redundancy group (RG).
IDP policy process	idp-policy	Enables various attack detection and prevention techniques on traffic traversing the network.
Integrated Local Management Interface process	ilmi	Provides bidirectional exchange of management information between two Asynchronous Transfer Mode (ATM) interfaces across a physical connection.
Inet process	inet-process	Configures the IP multicast family.
Init process	init	Initializes the USB modem.
Interface control process	interface-control	Controls the router's or switch's physical interface devices and logical interfaces.
Kernel replication process	kernel-replication	Replicates the state of the backup Routing Engine when graceful Routing Engine switchover (GRES) is configured.
Layer 2 address flooding and learning process	l2-learning	Enables a router to: • Learn unicast media access control (MAC) addresses to avoid flooding the packets to all the ports in a bridge domain. • Create a source MAC entry in its source and destination MAC tables for each MAC address learned from packets received on ports that belong to the bridge domain.
Layer 2 Control Protocol process	l2cpd-service	Enables features such as Layer 2 protocol tunneling and nonstop bridging.

Table 5: Junos OS Processes *(continued)*

Name	Process	Description
Link Aggregation Control Protocol process	lacp	The process: • Provides a standardized means for exchanging information between partner systems on a link. • Allows the link aggregation control instances to reach agreement on the identity of the Link Aggregation Group (LAG) to which the link belongs, and then to move the link to that LAG. • Enables the transmission and reception processes for the link to function in an orderly manner.
Link management process	link-management	Manages traffic engineering links.
Local policy decision function process	local-policy-decision-function	Regulates the collection of statistics related to applications and application groups and tracking of information about dynamic subscribers and static interfaces.
Logical system multiplexer process	logical-system-mux or lrmuxd	Manages multiple instances of the routing protocols process (rpd) on a machine running logical routers.
MAC validation process	mac-validation	Configures MAC address validation that enables a router to validate if received packets contain a trusted IP source and an Ethernet MAC source address.
Management Information Base II process	mib-process	Provides the router's MIB II agent.
Mobile IP process	mobile-ip	Configures Junos OS Mobile IP features.
NFS mount requests process	mountd-service	(EX Series switches and MX Series routers only) Completes NFS mount requests.
MPLS Periodic Traceroute process	mpls-traceroute	Enables tracing of forwarding equivalence classes (FECs) for LDP Layered Service Providers (LSPs).
Multiservice process	mspd	Configures mutliservice edge routers.
Multicast Snooping process	multicast-snooping	(EX Series switches and MX Series routers only) Makes Layer 3 information, such as the MAC addresses of members of a multicast group, known to Layer 2 devices, such as VLAN switches.
DNS server process	named-service	Enables a router or a switch to resolve hostnames into addresses.
Bidirectional Forwarding Detection process	neighbor-liveness	Displays the process, which specifies the maximum length of time that the router waits for its neighbor to re-establish an LDP session.

Table 5: Junos OS Processes *(continued)*

Name	Process	Description
Remote NFS server process	nfsd-service	Provides remote file access for applications that need NFS-based transport.
Network time process	ntp	Provides the mechanisms to synchronize time and coordinate time distribution in a large, diverse network.
Packet-triggered dynamic subscribers and policy control (PTCP) process	packet-triggered-subscribers	Enables the application of policies to dynamic subscribers that are controlled by a subscriber termination device.
Peer selection service process	peer-selection-service	Enables peer selection.
Periodic packet management process	periodic-packet-services	Processes a variety of time-sensitive periodic tasks so that other processes can more optimally direct their resources.
Packet Forwarding Engine process	pfed	Gathers and reports Packet Forwarding Engine statistics.
Packet gateway service process	pgcp-service or pgcpd	Configures the Packet Gateway Control Protocol (PGCP) that is required for the border gateway function (BGF) feature.
Pragmatic General Multicast process	pgm	Enables a reliable transport layer for multicast applications.
PIC services logging process	pic-services-logging or fsad (the file system access daemon)	Enables PICs to send special logging information to the Routing Engine for archiving on the hard disk.
Point-to-Point Protocol (PPP) process	ppp	Enables transporting IP traffic across point-to-point links.
Universal edge PPP process	ppp-service	Enables transporting IP traffic across universal edge routers.
Point-to-Point Protocol over Ethernet process	pppoe	Allows users to connect to a network of hosts over a bridge or access concentrator.
Process health monitor process	process-monitor or pmond	Extends the SNMP RMON alarm infrastructure to provide predefined monitoring for a selected set of object instances (such as file system usage, CPU usage, and memory usage) and dynamic object instances (such as Junos OS processes).

Table 5: Junos OS Processes *(continued)*

Name	Process	Description
Redundancy interface management process	redundancy-interface-process	Serves as an active or backup process of an application server and can be configured to process traffic for more than one logical application server.
Remote operations process	remote-operations	Provides the ping and traceroute MIBs.
Resource cleanup process	resource-cleanup	Enables cleaning of resources by entities other than the application itself.
Routing process	routing	Directs forwarding on the basis of routing tables, which maintain a record of the routes to various network destinations.
Traffic sampling control process	sampling	Performs packet sampling based on particular input interfaces and various fields in the packet header.
Session Border Control SBC configuration process	sbc-configuration-process	Configures the session border controller functionality that enables delivery of voice, video, and other multimedia services with assured quality and security.
SDK service process	sdk-service	Runs on the Routing Engine and enables communication between the SDK application and Junos OS. Although the SDK service process is present on the router, it is turned off by default.
Secure Neighbor Discovery (SND) protocol process	secure-neighbor-discovery or send	(EX Series switches and MX Series routers only) Provides support for protecting NDP messages.
Service Deployment System (SDX) process	service-deployment	Enables Junos OS to work with the Session and Resource Control (SRC) software.
Simple Network Management Protocol process	snmp	Enables the monitoring of network devices from a central location, and provides the router's or switch's SNMP master agent.
SONET Automatic Protection Switching (APS) process	sonet-aps	Monitors any SONET interface that participates in APS.
Static subscribers process	static-subscribers	Associates subscribers with statically configured interfaces, and provides dynamic service activation and activation for these subscribers.
Tunnel OAM process	tunnel-oamd	Enables the Operations, Administration, and Maintenance of Layer 2 tunneled networks.

Table 5: Junos OS Processes *(continued)*

Name	Process	Description
Virtual Router Redundancy Protocol (VRRP) process	vrrp	(EX Series switches and MX Series routers only) Enables hosts on a LAN to make use of redundant routing platforms on that LAN without requiring more than the static configuration of a single default route on the hosts.
Watchdog timer process	watchdog	Enables the watchdog timer when Junos OS encounters a problem.

Junos OS Support for IPv4 Routing Protocols

The Junos operating system (Junos OS) implements full IP routing functionality, providing support for IP version 4 (IPv4). The routing protocols are fully interoperable with existing IP routing protocols, and they have been developed to provide the scale and control necessary for the Internet core.

Junos OS provides the following routing and Multiprotocol Label Switching (MPLS) applications protocols:

- Unicast routing protocols:
  - BGP—Border Gateway Protocol, version 4, is an exterior gateway protocol (EGP) that guarantees loop-free exchange of routing information between routing domains (also called autonomous systems). BGP, in conjunction with Junos routing policy, provides a system of administrative checks and balances that can be used to implement peering and transit agreements.
  - ICMP—Internet Control Message Protocol router discovery enables hosts to discover the addresses of operational routers on the subnet.
  - IS-IS—Intermediate System-to-Intermediate System is a link-state interior gateway protocol (IGP) for IP networks that uses the shortest-path-first (SPF) algorithm, which also is referred to as the Dijkstra algorithm, to determine routes. The Junos IS-IS software is a new and complete implementation of the protocol, addressing issues of scale, convergence, and resilience.
  - OSPF—Open Shortest Path First, version 2, is an IGP that was developed for IP networks by the Internet Engineering Task Force (IETF). OSPF is a link-state protocol that makes routing decisions based on the SPF algorithm. The Junos OSPF software is a new and complete implementation of the protocol, addressing issues of scale, convergence, and resilience.
  - RIP—Routing Information Protocol, version 2, is a distance-vector IGP for IP networks based on the Bellman-Ford algorithm. RIP dynamically routes packets between a subscriber and a service provider without the subscriber having to configure BGP or participate in the service provider's IGP discovery process.
- Multicast routing protocols:

  - DVMRP—Distance Vector Multicast Routing Protocol is a dense-mode (flood-and-prune) multicast routing protocol.
  - IGMP—Internet Group Management Protocol, versions 1 and 2, is used to manage membership in multicast groups.
  - MSDP—Multicast Source Discovery Protocol enables multiple Protocol Independent Multicast (PIM) sparse mode domains to be joined. A rendezvous point (RP) in a PIM sparse mode domain has a peer relationship with an RP in another domain, enabling it to discover multicast sources from other domains.
  - PIM sparse mode and dense mode—Protocol-Independent Multicast is a multicast routing protocol. PIM sparse mode routes to multicast groups that might span wide-area and interdomain internets. PIM dense mode is a flood-and-prune protocol.
  - SAP/SDP—Session Announcement Protocol and Session Description Protocol handle conference session announcements.
- MPLS applications protocols:
  - LDP—The Label Distribution Protocol provides a mechanism for distributing labels in non-traffic-engineered applications. LDP enables routers to establish label-switched paths (LSPs) through a network by mapping network layer routing information directly to data-link layer switched paths. LSPs created by LDP can also traverse LSPs created by the Resource Reservation Protocol (RSVP).
  - MPLS—Multiprotocol Label Switching, formerly known as tag switching, enables you to manually or dynamically configure LSPs through a network. It lets you direct traffic through particular paths rather than rely on the IGP's least-cost algorithm to choose a path.
  - RSVP—The Resource Reservation Protocol, version 1, provides a mechanism for engineering network traffic patterns that is independent of the shortest path decided upon by a routing protocol. RSVP itself is not a routing protocol; it operates with current and future unicast and multicast routing protocols. The primary purpose of the Junos RSVP software is to support dynamic signaling for MPLS LSPs.

Related Documentation

- Junos OS Overview on page 3
- Junos OS Support for IPv6 Routing Protocols on page 22

Junos OS Support for IPv6 Routing Protocols

The Junos OS implements IP routing functionality, providing support for IP version 6 (IPv6). The routing protocols have been developed to provide the scale and control necessary for the Internet core.

The software supports the following unicast routing protocols:

- BGP—Border Gateway Protocol version 4, is an EGP that guarantees loop-free exchange of routing information between routing domains (also called autonomous systems). BGP, in conjunction with Junos routing policies, provides a system of administrative checks and balances that can be used to implement peering and transit agreements.
- ICMP—Internet Control Message Protocol router discovery enables hosts to discover the addresses of operational routers on the subnet.
- IS-IS—Intermediate System-to-Intermediate System is a link-state IGP for IP networks that uses the SPF algorithm, which also is referred to as the Dijkstra algorithm, to determine routes. The Junos OS supports a new and complete implementation of the protocol, addressing issues of scale, convergence, and resilience.
- OSPF version 3 (OSPFv3) supports IPv6. The fundamental mechanisms of OSPF such as flooding, designated router (DR) election, area-based topologies, and the SPF calculations remain unchanged. Some differences exist either because of changes in protocol semantics between IPv4 and IPv6, or because of the need to handle the increased address size of IPv6.
- RIP—Routing Information Protocol version 2 is a distance-vector IGP for IP networks based on the Bellman-Ford algorithm. RIP dynamically routes packets between a subscriber and a service provider without the subscriber having to configure BGP or to participate in the service provider's IGP discovery process.

Related Documentation

- Junos OS Overview on page 3
- Junos OS Support for IPv4 Routing Protocols on page 21

Junos OS Routing and Forwarding Tables

A major function of the Junos OS routing protocol process is to maintain the Routing Engine's routing tables and use these tables to determine the active routes to network destinations. The routing protocol process then installs these routes into the Routing Engine's forwarding table. The Junos OS kernel then copies this forwarding table to the Packet Forwarding Engine.

The routing protocol process maintains multiple routing tables. By default, it maintains the following three routing tables. You can configure additional routing tables to suit your requirements.

- Unicast routing table—Stores routing information for all unicast routing protocols running on the router. BGP, IS-IS, OSPF, and RIP all store their routing information in this routing table. You can configure additional routes, such as static routes, to be included in this routing table. BGP, IS-IS, OSPF, and RIP use the routes in this routing table when advertising routing information to their neighbors.
- Multicast routing table (cache)—Stores routing information for all the running multicast protocols. DVMRP and PIM both store their routing information in this routing table, and you can configure additional routes to be included in this routing table.
- MPLS routing table—Stores MPLS path and label information.

With each routing table, the routing protocol process uses the collected routing information to determine active routes to network destinations.

For unicast routes, the routing protocol process determines active routes by choosing the most preferred route, which is the route with the lowest preference value. By default, the route's preference value is simply a function of how the routing protocol process learned about the route. You can modify the default preference value using routing policy and with software configuration parameters.

For multicast traffic, the routing protocol process determines active routes based on traffic flow and other parameters specified by the multicast routing protocol algorithms. The routing protocol process then installs one or more active routes to each network destination into the Routing Engine's forwarding table.

Related Documentation

- Routing Policy Overview on page 24

Routing Policy Overview

By default, all routing protocols place their routes into the routing table. When advertising routes, the routing protocols by default advertise only a limited set of routes from the routing table. Specifically, each routing protocol exports only the active routes that were learned by that protocol. In addition, the interior gateway protocols (IS-IS, OSPF, and RIP) export the direct (interface) routes for the interfaces on which they are explicitly configured.

You can control the routes that a protocol places into each table and the routes from that table that the protocol advertises. You do this by defining one or more routing policies and then applying them to the specific routing protocol.

Routing policies applied when the routing protocol places routes into the routing table are referred to as *import policies* because the routes are being imported into the routing table. Policies applied when the routing protocol is advertising routes that are in the routing table are referred to as *export policies* because the routes are being exported from the routing table. In other words, the terms *import* and *export* are used with respect to the routing table.

A routing policy enables you to control (filter) which routes a routing protocol imports into the routing table and which routes a routing protocol exports from the routing table. A routing policy also enables you to set the information associated with a route as it is being imported into or exported from the routing table. Filtering imported routes enables you to control the routes used to determine active routes. Filtering routes being exported from the routing table enables you to control the routes that a protocol advertises to its neighbors.

You implement routing policy by defining policies. A policy specifies the conditions to use to match a route and the action to perform on the route when a match occurs. For example, when a routing table imports routing information from a routing protocol, a routing policy might modify the route's preference, mark the route with a color to identify it and allow it to be manipulated later, or prevent the route from even being installed in a routing table. When a routing table exports routes into a routing protocol, a policy might

assign metric values, modify the BGP community information, tag the route with additional information, or prevent the route from being exported altogether. You also can define policies for redistributing the routes learned from one protocol into another protocol.

Related Documentation

- Junos OS Routing and Forwarding Tables on page 23
- Junos OS Support for IPv4 Routing Protocols on page 21
- Junos OS Support for IPv6 Routing Protocols on page 22

Junos OS Support for VPNs

The Junos OS supports several types of virtual private networks (VPNs):

- Layer 2 VPNs—A Layer 2 VPN links a set of sites that share routing information, and whose connectivity is controlled by a collection of policies. A Layer 2 VPN is not aware of routes within a customer's network. It simply provides private links between a customer's sites over the service provider's existing public Internet backbone.
- Layer 3 VPNs—A Layer 3 VPN is the same thing as a Layer 2 VPN, but it is aware of routes within a customer's network, requiring more configuration on the part of the service provider than a Layer 2 VPN. The sites that make up a Layer 3 VPN are connected over a service provider's existing public Internet backbone.
- Interprovider VPNs—An interprovider VPN supplies connectivity between two VPNs in separate autonomous systems (ASs). This functionality can be used by a VPN customer with connections to several Internet service providers (ISPs), or different connections to the same ISP in various geographic regions.
- Carrier-of-carrier VPNs—Carrier-of-carrier VPNs allow a VPN service provider to supply VPN service to a customer who is also a service provider. The latter service provider supplies Internet or VPN service to an end customer.

Related Documentation

- Junos OS Overview on page 3

Junos OS Configuration from External Devices

You can configure the router from a system console connected to the router's console port or by using Telnet to access the router remotely. The router provides three ports on the craft interface for connecting external management devices to the Routing Engine and the Junos OS:

- Console port—Connects a system console using an RS-232 serial cable.
- Auxiliary port—Connects a laptop or modem using an RS-232 serial cable.
- Ethernet management port—Connects the Routing Engine to a management LAN (or any other device that plugs into an Ethernet connection) for remote management through a PC or other client device. The Ethernet port is 10/100 megabits per second (Mbps) autosensing and requires an RJ-45 connector.

Related Documentation

- Methods for Configuring Junos OS on page 36
- Configuring the Junos OS to Set Console and Auxiliary Port Properties on page 83

Junos OS Tracing and Logging Operations

Tracing and logging operations allow you to track events that occur in the router—both normal router operations and error conditions—and to track the packets that are generated by or passed through the router. The results of tracing and logging operations are placed in files in the **/var/log** directory on the router.

The Junos OS provides an option to do remote tracing for specific processes, which greatly reduces use of the router's internal storage for tracing and is analogous to remote system logging. You configure remote tracing system-wide using the **tracing** statement at the **[edit system]** hierarchy level. By default, remote tracing is not configured. You can disable remote tracing for specific processes using the **no-remote-trace** statement at the **[edit *process-name* traceoptions]** hierarchy level. This feature does not alter local tracing functionality in any way, and logging files are stored on the router.

The Junos OS supports remote tracing for the following processes:

- chassisd—Chassis-control process
- eventd—Event-processing process
- cosd—Class-of-service process
- spd—Adaptive-services process

Logging operations use a system logging mechanism similar to the UNIX syslogd utility to record systemwide, high-level operations, such as interfaces going up or down and users logging in to or out of the router. You configure these operations by using the **syslog** statement at the **[edit system]** hierarchy level, as described in Junos OS System Log Configuration Overview, and by using the **options** statement at the **[edit routing-options]** hierarchy level, as described in the Junos OS Routing Protocols Configuration Guide.

Tracing operations record more detailed messages about the operation of routing protocols, such as the various types of routing protocol packets sent and received, and routing policy actions. You configure tracing operations using the **traceoptions** statement. You can define tracing operations in different portions of the router configuration:

- Global tracing operations—Define tracing for all routing protocols. You define these tracing operations at the **[edit routing-options]** hierarchy level of the configuration.
- Protocol-specific tracing operations—Define tracing for a specific routing protocol. You define these tracing operations in the **[edit protocol]** hierarchy when configuring the individual routing protocol. Protocol-specific tracing operations override any equivalent operations that you specify in the global **traceoptions** statement. If there are no equivalent operations, they supplement the global tracing options. If you do not specify any protocol-specific tracing, the routing protocol inherits all the global tracing operations.

- Tracing operations within individual routing protocol entities—Some protocols allow you to define more granular tracing operations. For example, in Border Gateway Protocol (BGP), you can configure peer-specific tracing operations. These operations override any equivalent BGP-wide operations or, if there are no equivalents, supplement them. If you do not specify any peer-specific tracing operations, the peers inherit, first, all the BGP-wide tracing operations and, second, the global tracing operations.
- Interface tracing operations—Define tracing for individual router interfaces and for the interface process itself. You define these tracing operations at the **[edit interfaces]** hierarchy level of the configuration as described in the Junos® OS Network Interfaces.
- Remote tracing—To enable system-wide remote tracing, include the **destination-override syslog host** statement at the **[edit system tracing]** hierarchy level. This specifies the remote host running the system log process (syslogd), which collects the traces. Traces are written to file(s) on the remote host per the syslogd configuration in **/etc/syslog.conf**. By default remote tracing is *not* configured.

  To override the system-wide remote tracing configuration for a particular process, include the **no-remote-trace** statement at the **[edit** ***process-name*** **traceoptions]** hierarchy. When **no-remote-trace** is enabled, the process does local tracing.

  NOTE: **When remote tracing is configured, traces will go to the remote host.**

  To collect traces, use the **local0** facility as the selector in **/etc/syslog.conf** on the remote host. To separate traces from various processes into different files, include the process name or trace-file name if it is specified at the [edit *process-name* traceoptions file] hierarchy level, in the Program field in **/etc/syslog.conf**. If your syslog server supports parsing hostname and program-name, then you can separate traces from the various processes.

Related Documentation

- Junos OS System Log Configuration Overview

CHAPTER 2

Junos OS Security Overview

Junos OS Default Settings for Router Security

The Junos OS protects against common router security weaknesses with the following default settings:

- The Junos OS does not forward directed broadcast messages. Directed broadcast services send ping requests from a spoofed source address to a broadcast address and can be used to attack other Internet users. For example, if broadcast ping messages were allowed on the 200.0.0.0/24 network, a single ping request could result in up to 254 responses to the supposed source of the ping. The source would actually become the victim of a denial-of-service (DoS) attack.
- Only console access to the router is enabled by default. Remote management access to the router and all management access protocols, including Telnet, FTP, and SSH (Secure Shell), are disabled by default.
- The Junos OS does not support the SNMP set capability for editing configuration data. Although the software supports the SNMP set capability for monitoring and troubleshooting the network, this support exposes no known security issues. (You can configure the software to disable this SNMP set capability.)
- The Junos OS ignores martian addresses that contain the following prefixes: 0.0.0.0/8, 127.0.0.0/8, 128.0.0.0/16, 191.255.0.0/16, 192.0.0.0/24, 223.255.55.0/24, and 240.0.0.0/4. Martian addresses are reserved host or network addresses about which all routing information should be ignored.

Junos OS Features for Router Security

Router security consists of three major elements: physical security of the router, operating system security, and security that can be effected through configuration. Physical security involves restricting access to the router. Exploits that can easily be prevented from remote locations are extremely difficult or impossible to prevent if an attacker can gain access to the router's management port or console. The inherent security of the Junos operating system also plays an important role in router security. The Junos OS is extremely stable

and robust. The Junos OS also provides features to protect against attacks, allowing you to configure the router to minimize vulnerabilities.

The following are Junos OS features available to improve router security:

Methods of Remote Access for Router Management

When you first install the Junos OS, all remote access to the router is disabled, thereby ensuring that remote access is possible only if deliberately enabled by an authorized user. You can establish remote communication with a router in one of the following ways:

- Out-of-band management—Enables connection to the router through an interface dedicated to router management. Juniper Networks routers support out-of-band management with a dedicated management Ethernet interface, as well as EIA-232 console and auxiliary ports. On all routers other than the TX Matrix Plus router, T1600 router, T1600 or T4000 routers connected to a TX Matrix Plus router in a routing matrix, T640 routers with a Routing Engine supporting 64-bit Junos OS, and PTX Series Transport switches, the management interface is fxp0. On a TX Matrix Plus router, T1600 router, T1600 or T4000 routers in a routing matrix, T640 routers with a Routing Engine supporting 64-bit Junos OS, and PTX Series Transport switches, the management Ethernet Interface is labeled em0. The management Ethernet interface connects directly to the Routing Engine. No transit traffic is allowed through this interface, providing complete separation of customer and management traffic and ensuring that congestion or failures in the transit network do not affect the management of the router.
- Inband management—Enables connection to the routers using the same interfaces through which customer traffic flows. Although this approach is simple and requires no dedicated management resources, it has some disadvantages:
  - Management flows and transit traffic flows are mixed together. Any attack traffic that is mixed with the normal traffic can affect the communication with the router.
  - The links between router components might not be totally trustworthy, leading to the possibility of wiretapping and replay attacks.

For management access to the router, the standard ways to communicate with the router from a remote console are with Telnet and SSH. SSH provides secure encrypted communications and is therefore useful for inband router management. Telnet provides unencrypted, and therefore less secure, access to the router.

Junos OS Supported Protocols and Methods for User Authentication

On a router, you can create local user login accounts to control who can log in to the router and the access privileges they have. A password, either an SSH key or a Message Digest 5 (MD5) password, is associated with each login account. To define access privileges, you create login classes into which you group users with similar jobs or job functions. You use these classes to explicitly define what commands their users are and are not allowed to issue while logged in to the router.

The management of multiple routers by many different personnel can create a user account management problem. One solution is to use a central authentication service to simplify account management, creating and deleting user accounts only on a single, central server. A central authentication system also simplifies the use of one-time password systems such as SecureID, which offer protection against password sniffing and password replay attacks (attacks in which someone uses a captured password to pose as a router administrator).

The Junos OS supports two protocols for central authentication of users on multiple routers:

- Remote Authentication Dial-In User Service (RADIUS) and Terminal Access Controller Access Control System Plus (TACACS+).
- RADIUS, a multivendor IETF standard whose features are more widely accepted than those of TACACS+ or other proprietary systems. All one-time-password system vendors support RADIUS.

The Junos OS also supports the following authentication methods:

- Internet Protocol Security (IPsec). IPsec architecture provides a security suite for the IPv4 and IPv6 network layers. The suite provides such functionality as authentication of origin, data integrity, confidentiality, replay protection, and nonrepudiation of source. In addition to IPsec, the Junos OS also supports the Internet Key Exchange (IKE), which defines mechanisms for key generation and exchange, and manages security associations (SAs).
- MD5 authentication of MSDP peering sessions. This authentication provides protection against spoofed packets being introduced into a peering session.
- SNMPv3 authentication and encryption. SNMPv3 uses the user-based security model (USM) for message security and the view-based access control model (VACM) for access control. USM specifies authentication and encryption. VACM specifies access-control rules.

Junos OS Plain-Text Password Requirements

The Junos OS has special requirements when you create plain-text passwords on a router. The default requirements for plain-text passwords are as follows:

- The password must be between 6 and 128 characters long.

- You can include uppercase letters, lowercase letters, numbers, punctuation marks, and any of the following special characters:
  ! @ # $ % ^ & * , + = < > : ;
  Control characters are not recommended.
- The password must contain at least one change of case or character class.

You can change the requirements for plain-text passwords.

You can include the **plain-text-password** statement at the following hierarchy levels:

- **[edit system diag-port-authentication]**
- **[edit system pic-console-authentication]**
- **[edit system root-authentication]**
- **[edit system login user *username* authentication]**

Junos OS Support for Routing Protocol Security Features and IPsec

The main task of a router is to forward user traffic toward its intended destination based on the information in the router's routing and forwarding tables. You can configure routing policies that define the flows of routing information through the network, controlling which routes the routing protocols place in the routing tables and which routes they advertise from the tables. You can also use routing policies to change specific route characteristics, change the BGP route flap-damping values, perform per-packet load balancing, and enable class of service (CoS).

Attackers can send forged protocol packets to a router with the intent of changing or corrupting the contents of its routing table or other databases, which can degrade the functionality of the router. To prevent such attacks, you must ensure that routers form routing protocol peering or neighboring relationships with trusted peers. One way to do this is by authenticating routing protocol messages. The Junos BGP, IS-IS, OSPF, RIP, and RSVP protocols support HMAC-MD5 authentication, which uses a secret key combined with the data being protected to compute a hash. When the protocols send messages, the computed hash is transmitted with the data. The receiver uses the matching key to validate the message hash.

The Junos OS supports the IPsec security suite for the IPv4 and IPv6 network layers. The suite provides such functionality as authentication of origin, data integrity, confidentiality, replay protection, and nonrepudiation of source. The Junos OS also supports IKE, which defines mechanisms for key generation and exchange, and manages SAs.

Junos OS Support for Firewall Filters

Firewall filters allow you to control packets transiting the router to a network destination and packets destined for and sent by the router. You can configure firewall filters to control which data packets are accepted on and transmitted from the physical interfaces, and which local packets are transmitted from the physical interfaces and the Routing Engine. Firewall filters provide a means of protecting your router from excessive traffic. Firewall filters that control local packets can also protect your router from external aggressions, such as DoS attacks.

To protect the Routing Engine, you can configure a firewall filter only on the router's loopback interface. Adding or modifying filters for each interface on the router is not necessary. You can design firewall filters to protect against ICMP and Transmission Control Protocol (TCP) connection request (SYN) floods and to rate-limit traffic being sent to the Routing Engine.

Junos OS Auditing Support for Security

The Junos OS logs significant events that occur on the router and within the network. Although logging itself does not increase security, you can use the system logs to monitor the effectiveness of your security policies and router configurations. You can also use the logs when reacting to a continued and deliberate attack as a means of identifying the source address, router, or port of the attacker's traffic. You can configure the logging of different levels of events, from only critical events to all events, including informational events. You can then inspect the contents of the system log files either in real time or later.

Debugging and troubleshooting are much easier when the timestamps in the system log files of all routers are synchronized, because events that span the network might be correlated with synchronous entries in multiple logs. The Junos OS supports the Network Time Protocol (NTP), which you can enable on the router to synchronize the system clocks of routers and other networking equipment. By default, NTP operates in an unauthenticated mode. You can configure various types of authentication, including an HMAC-MD5 scheme.

Related Documentation

- IPsec Overview
- Junos OS System Log Configuration Overview

CHAPTER 3

Junos OS Configuration Overview

Methods for Configuring Junos OS

You can use any of the methods shown in Table 6 on page 36 to configure Junos OS:

Table 6: Methods for Configuring Junos OS

Method	Description
Command-line interface (CLI)	Create the configuration for the device using the CLI. You can enter commands from a single command line, and scroll through recently executed commands.
ASCII file	Load an ASCII file containing a configuration that you created earlier, either on this system or on another system. You can then activate and run the configuration file, or you can edit it using the CLI and then activate it.
J-Web graphical user interface (GUI)	Use the J-Web graphical user interface (GUI) to configure the device. J-Web enables you to monitor, configure, troubleshoot, and manage the router on a client by means of a Web browser. The J-Web GUI is preinstalled on J Series Services Routers and is an optional software package that can be installed on M Series and T Series routers. J-Web is not available for the QFX Series.
Junos XML management protocol (API)	Use Junos XML protocol Perl client modules to develop custom applications for configuring information on devices that run Junos OS. Client applications use the Junos XML management protocol to request and change configuration information on Juniper Networks J Series, M Series, and T Series routers. The Junos XML management protocol is customized for Junos OS, and operations in the API are equivalent to those in the Junos OS CLI.
NETCONF application programming interface (API)	Use NETCONF Perl client modules to develop custom applications for configuring information on devices that run Junos OS. Client applications use the NETCONF XML management protocol to request and change configuration information on Juniper Networks J Series, M Series, and T Series routers. The NETCONF XML management protocol includes features that accommodate the configuration data models of multiple vendors.
Configuration commit scripts	Create scripts that run at commit time to enforce custom configuration rules. Commit scripts are written in Extensible Stylesheet Language Transformations (XSLT). Commit scripts are not available for the QFX Series.

The following sections contain complete descriptions of the methods you can use to configure Junos OS:

- Junos OS Command-Line Interface (CLI) on page 37
- ASCII File on page 37
- J-Web Package on page 37
- Junos XML Management Protocol Software on page 38

- NETCONF XML Management Protocol Software on page 38
- Configuration Commit Scripts on page 38

Junos OS Command-Line Interface (CLI)

The Junos OS CLI is a straightforward command interface. You use Emacs-style keyboard sequences to move around on a command line and scroll through a buffer that contains recently executed commands. You type commands on a single line, and the commands are executed when you press the Enter key. The CLI also provides command help and command completion. For more information about the CLI, see the CLI User Guide and Junos OS Operational Mode Commands.

ASCII File

You can load an ASCII file containing a configuration that you created earlier, either on this system or another system. You can then activate and run the configuration file as is, or you can edit it using the CLI and then activate it.

J-Web Package

As an alternative to entering CLI commands, the Junos OS supports the J-Web graphical user interface (GUI). The J-Web user interface enables you to monitor, configure, troubleshoot, and manage the router on a client by means of a Web browser with Hypertext Transfer Protocol (HTTP) or HTTP over Secure Sockets Layer (HTTPS) enabled.

The J-Web user interface is preinstalled on J Series Services Routers. It is provided as an optional, licensed software package (jweb package) on M Series and T Series routers. The jweb package is not included in jinstall and jbundle software bundles. It must be installed separately. To install the package on M Series and T Series routers, follow the procedure described in the Installation and Upgrade Guide.

J-Web supports weak (56-bit) encryption by default. This enables international customers to install J-Web and use HTTPS connections for J-Web access. Domestic customers can also install the jcrypto strong encryption package. This package automatically overrides the weak encryption. For more information about the J-Web GUI, see the *J-Web Interface User Guide*.

NOTE: Because the J-Web package is bundled separately from other packages, it is possible to have a version mismatch between J-Web and other Junos OS packages you have installed.

To check for a version mismatch, use the **show system alarms** CLI command. If the version number does not match exactly, a system alarm appears. For example, if you install the 7.4R1.2 jroute package and the 7.4R1.1 jweb package, an alarm is activated. For more information on the **show system alarms** command, see the Junos OS Operational Mode Commands.

Junos XML Management Protocol Software

The Junos XML management protocol is an Extensible Markup Language (XML) application that client applications use to request and change configuration information on Juniper Networks J Series, M Series, MX Series, and T Series routers. This API is customized for Junos OS, and operations in the API are equivalent to Junos OS CLI configuration mode commands. The Junos XML management protocol includes a set of Perl modules that enable client applications to communicate with a Junos XML protocol server on the router. The Perl modules are used to develop custom applications for configuring and monitoring Junos OS.

For a complete description of how to use Junos XML and Junos XML management protocol software, see the *Junos XML Management Protocol Guide*.

NETCONF XML Management Protocol Software

The NETCONF XML management protocol is an Extensible Markup Language (XML) application that client applications can use to request and change configuration information on Juniper Networks J Series, M Series, MX Series, and T Series routers. This API is customized for Junos OS, and includes features that accommodate the configuration data models of multiple vendors. The NETCONF XML management protocol includes a set of Perl modules that enable client applications to communicate with a NETCONF server on the router. The Perl modules are used to develop custom applications for configuring and monitoring Junos OS.

For a complete description of how to use Junos XML and NETCONF XML management protocol software, see the *NETCONF XML Management Protocol Guide*.

Configuration Commit Scripts

You can create and use scripts that run at commit time to enforce custom configuration rules. If a configuration breaks the custom rules, the script can generate actions that the Junos OS performs. These actions include:

- Generating custom error messages
- Generating custom warning messages
- Generating custom system log messages
- Making changes to the configuration

Configuration commit scripts also enable you to create macros, which expand simplified custom aliases for frequently used configuration statements into standard Junos configuration statements. Commit scripts are written in Extensible Stylesheet Language Transformations (XSLT). For more information, see the Junos OS Configuration and Operations Automation Guide.

Related Documentation

- Junos OS Configuration from External Devices on page 25

Junos OS Configuration Using the CLI

You configure the Junos OS using the Junos OS command-line interface (CLI). The CLI is described in detail in the CLI User Guide.

After completing the initial minimal configuration, you can configure software properties. If you configure the software interactively using the CLI, you enter software configuration statements to create a candidate configuration that contains a hierarchy of statements. At any hierarchy level, you generally can enter statements in any order. While you are configuring the software, you can display all or portions of the candidate configuration, and you can insert or delete statements. Any changes you make affect only the candidate configuration, not the active configuration that is running on the router.

The configuration hierarchy logically groups related functions, which results in configuration statements that have a consistent syntax. For example, you configure routing protocols, routing policies, interfaces, and SNMP management in their own separate portions of the configuration hierarchy.

At each level of the hierarchy, you can display a list of the statements available at that level, along with short descriptions of the statements' functions. To have the CLI complete the statement name if it is unambiguous or to provide a list of possible completions, you can type a partial statement name followed by a space or tab.

More than one user can edit a router's configuration simultaneously. All changes made by all users are visible to everyone editing the configuration.

Related Documentation

- Disk Space Management for Junos OS Installation on page 94
- Creating and Activating a Candidate Configuration on page 39

Creating and Activating a Candidate Configuration

You enter software configuration statements using the CLI to create a candidate configuration that contains a hierarchy of statements. To have a candidate configuration take effect, you commit the changes. At this point, the candidate file is checked for proper syntax, activated, and marked as the current, operational software configuration file. If multiple users are editing the configuration, when you commit the candidate configuration, all changes made by all the users take effect.

The CLI always maintains a copy of previously committed versions of the software configuration. If you need to return to a previous configuration, you can do this from within the CLI.

Related Documentation

- Junos OS Commit Model for Router or Switch Configuration on page 9

Format for Specifying IP Addresses, Network Masks, and Prefixes in Junos OS Configuration Statements

Many statements in the Junos OS configuration include an option to specify an IP address or route prefix. This option is represented in one of the following ways:

- ***network/prefix-length***—Network portion of the IP address, followed by a slash and the destination prefix length (previously called the subnet mask). For example, 10.0.0.1/8.
- ***network***—IP address. For example, 10.0.0.2.
- ***destination-prefix/prefix-length***—Route prefix, followed by a slash and the destination prefix length. For example, 192.168.1.10/32.

You enter all IP addresses in classless mode. You can enter the IP address with or without a prefix length, in standard dotted notation (for example, 1.2.3.4), or hexadecimal notation as a 32-bit number in network-byte order (for example, 0x01020304). If you omit any octets, they are assumed to be zero. Specify the prefix length as a decimal number from 1 through 32.

Related Documentation

- Format for Specifying Filenames and URLs in Junos OS CLI Commands on page 40

Format for Specifying Filenames and URLs in Junos OS CLI Commands

In some command-line interface (CLI) commands and configuration statements—including **file copy**, **file archive**, **load**, **save**, **set system login user** ***username*** **authentication** ***load-key-file***, and **request system software add**—you can include a filename. On a routing matrix, you can include chassis information (for example, **lcc0**, **lcc0-re0**, or **lcc0-re1**) as part of the filename.

A *routing matrix* is a multichassis architecture composed of either one TX Matrix router and from one to four T640 routers connected to the TX Matrix router, or one TX Matrix Plus router and from one to four T1600 routers connected to the TX Matrix Plus router. From the perspective of the user interface, the routing matrix appears as a single router. On a routing matrix composed of the TX Matrix router and T640 routers, the TX Matrix router controls all the T640 routers. On a routing matrix composed of a TX Matrix Plus router and T1600 routers, the TX Matrix Plus router controls all the T1600 routers.

You can specify a filename or URL in one of the following ways:

- ***filename***—File in the user's current directory on the local CompactFlash card (not applicable on the QFX Series). You can use wildcards to specify multiple source files or a single destination file. Wildcards are not supported in Hypertext Transfer Protocol (HTTP) or FTP.

  NOTE: **Wildcards are supported only by the file (compare | copy | delete | list | rename | show) commands. When you issue the file show command with a wildcard, it must resolve to one filename.**

- ***path/filename***—File on the local flash disk.
- **/var/*filename*** or **/var/*path/filename***—File on the local hard disk. You can also specify a file on a local Routing Engine for a specific T640 router or a T1600 router in a routing matrix:

  ```
  user@host>  file delete lcc0-re0:/var/tmp/junk
  ```

- **a:*filename*** or **a:*path/filename***—File on the local removable media. The default path is **/** (the root-level directory). The removable media can be in MS-DOS or UNIX (UFS) format.
- ***hostname*:*/path/filename***, ***hostname*:*filename***, ***hostname*:*path/filename***, or "**scp:*//hostname/path/filename***"—File on an **scp/ssh** client. This form is not available in the worldwide version of the Junos OS. The default path is the user's home directory on the remote system. You can also specify ***hostname*** as ***username*@*hostname***.
- **ftp:*//hostname/path/filename***—File on an FTP server. You can also specify ***hostname*** as ***username*@*hostname*** or ***username*:*password*@*hostname***. The default path is the user's home directory. To specify an absolute path, the path must start with **%2F**; for example, **ftp:*//hostname/%2Fpath/filename***. To have the system prompt you for the password, specify **prompt** in place of the password. If a password is required and you do not specify the password or **prompt**, an error message is displayed:

  ```
  user@host>  file copy ftp://username@ftp.hostname.net/filename
  file copy ftp.hostname.net: Not logged in.
  ```

  ```
  user@host> file copy ftp://username:prompt@ftp.hostname.net/filename
  Password for username@ftp.hostname.net:
  ```

- **re0:*/path/filename*** or **re1:*/path/filename***—File on a local Routing Engine. You can also specify a file on a local Routing Engine for a specific T640 router or a T1600 router in a routing matrix:

  ```
  user@host>  show log lcc0-re1:chassisd
  ```

  NOTE: **You cannot specify a URL for a file on a Hypertext Transfer Protocol (HTTP) server, because HTTP URLs are not writable.**

Related Documentation

- Format for Specifying IP Addresses, Network Masks, and Prefixes in Junos OS Configuration Statements on page 40
- Default Directories for Junos OS File Storage on the Router or Switch on page 42

Default Directories for Junos OS File Storage on the Router or Switch

Junos OS files are stored in the following directories on the router or switch:

- **/altconfig**—When you back up the currently running and active file system partitions on the router or switch to standby partitions using the **request system snapshot** command, the **/config** directory is backed up to **/altconfig**. Normally, the **/config** directory is on the CompactFlash card and **/altconfig** is on the hard disk.
- **/altroot**—When you back up the currently running and active file system partitions on the router to standby partitions using the **request system snapshot** command, the root file system (**/**) is backed up to **/altroot**. Normally, the root directory is on the CompactFlash card and **/altroot** is on the hard disk.
- **/config**—This directory is located on the primary boot device, that is, on the device from which the router or switch booted (generally the CompactFlash card (device **wd0**) or internal flash storage. This directory contains the current operational router or switch configuration and the last three committed configurations, in the files **juniper.conf**, **juniper.conf.1**, **juniper.conf.2**, and **juniper.conf.3**, respectively.
- **/var**—This directory is located either on the hard disk (device **wd2**) or internal flash storage. It contains the following subdirectories:
  - **/home**—Contains users' home directories, which are created when you create user access accounts. For users using SSH authentication, their **.ssh** file, which contains their SSH key, is placed in their home directory. When a user saves or loads a configuration file, that file is loaded from the user's home directory unless the user specifies a full pathname.
  - **/db/config**—Contains up to 46 additional previous versions of committed configurations, which are stored in the files **juniper.conf.4.gz** through **juniper.conf.49.gz**.
  - **/log**—Contains system log and tracing files.
  - **/tmp**—Contains core files. The software saves up to five core files, numbered from 0 through 4. File number 0 is the oldest core file and file number 4 is the newest core file. To preserve the oldest core files, the software overwrites the newest core file, number 4, with any subsequent core file.

Each router or switch ships with removable media (device **wfd0**) that contains a backup copy of the Junos OS.

Directories on the Logical System

In addition to saving the configuration of logical systems in the current **juniper.conf** file, each logical system has an individual directory structure created in the **/var/logical-systems/*logical-system-name*** directory.

The **/var/logical-systems/*logical-system-name*** directory contains the following subdirectories:

- **/config**—Contains the current operational configuration specific to the logical system.

- **/log**—Contains system log and tracing files specific to the logical system.

  To maintain backward compatibility for the log files with previous versions of Junos OS, a symbolic link (symlink) from the **/var/logs/*logical-system-name*** directory to the **/var/logical-systems/*logical-system-name*** directory is created when a logical system is configured.

- **/tmp**—Contains temporary files specific to the logical system.

This file system for each logical system enables logical system users to view trace logs and modify logical system files. Logical system administrators have full access to view and modify all files specific to the logical system.

Logical system users and administrators can save and load configuration files at the logical-system hierarchy level using the **save** and **load** configuration mode commands. In addition, they can also issue the **show log**, **monitor**, and **file** operational mode commands at the logical-system hierarchy level.

Related Documentation

- Format for Specifying Filenames and URLs in Junos OS CLI Commands on page 40

Initial Router or Switch Configuration Using the Junos OS

This topic provides an overview of initial router or switch configuration tasks using the Junos OS.

When you turn on a router or switch for the first time, the Junos OS automatically boots and starts. You must enter basic configuration information so that the router or switch is on the network and you can log in to it over the network.

To configure the router or switch initially, you must connect a terminal or laptop computer to the router or switch through the console port—a serial port on the front of the router or switch. Only console access to the router or switch is enabled by default. Remote management access to the router or switch and all management access protocols, including Telnet, FTP, and SSH, are disabled by default.

When you first connect to the router or switch console, you must log in as the user **root**. At first, the root account requires no password. You see that you are the user **root,** because the command prompt shows the username **root@#**.

You must start the Junos OS command-line interface (CLI) using the command **cli**. The command prompt **root@>** indicates that you are the user root and that you are in the Junos OS operational mode. Enter the Junos OS configuration mode by typing the command **configure**. The command prompt **root@#** indicates that you are in the Junos OS configuration mode.

When you first configure a router or switch, you must configure the following basic properties:

- Router or switch hostname
- Domain name

- IP address of the router or switch management Ethernet interface—To find the management Ethernet interface that you should use for configuration, see Supported Routing Engines by Chassis.
- IP address of a backup router
- IP address of one or more DNS name servers on your network
- Password for the root account

Related Documentation

- Configuring Junos OS for the First Time on a Router or Switch with a Single Routing Engine on page 51
- Configuring Junos OS for the First Time on a Device with Dual Routing Engines on page 55
- Supported Routing Engines by Chassis
- Junos OS Configuration Using the CLI on page 39

CHAPTER 4

Junos OS Monitoring Tools Overview

Junos OS Tools for Monitoring the Router

The primary method of monitoring and troubleshooting the Junos OS, routing protocols, network connectivity, and the router hardware is to enter commands from the CLI. The CLI enables you to display information in the routing tables and routing protocol-specific data, and to check network connectivity using **ping** and **traceroute** commands.

The J-Web graphical user interface (GUI) is a Web-based alternative to using CLI commands to monitor, troubleshoot, and manage the router.

The Junos OS includes SNMP software, which enables you to manage routers. The SNMP software consists of an SNMP master agent and a MIB II agent, and supports MIB II SNMP version 1 traps and version 2 notifications, SNMP version 1 **Get** and **GetNext** requests, and version 2 **GetBulk** requests.

The software also supports tracing and logging operations so that you can track events that occur in the router—both normal router operations and error conditions—and track the packets that are generated by or pass through the router. Logging operations use a syslog-like mechanism to record system-wide, high-level operations, such as interfaces going up or down and users logging in to or out of the router. Tracing operations record more detailed messages about the operation of routing protocols, such as the various types of routing protocol packets sent and received, and routing policy actions.

Related Documentation

- Methods for Configuring Junos OS on page 36
- Junos OS Features for Router Security on page 29

PART 2

Configuration

CHAPTER 5

Configuring Basic System Management Features

Configuring CLI Tips

The Junos OS CLI provides the option of configuring CLI tips for the user. By default, the **tip** command is not enabled when a user logs in.

- To enable tips, include the **login-tip** statement at the **[edit system login class *class-name*]** hierarchy level:

  [edit system login class *class-name*]
  login-tip;

Adding this statement enables the **tip** command for the class specified, provided the user logs in using the CLI.

Related Documentation

- CLI User Interface Overview
- Defining Junos OS Login Classes
- login-tip

Configuring Junos OS for the First Time on a Router or Switch with a Single Routing Engine

When you turn on a router the first time, Junos OS automatically boots and starts. You must enter basic configuration information so that the router is on the network and you can log in to it over the network.

To configure the router initially, you must connect a terminal or laptop computer to the router through the console port—a serial port on the front of the router. Only console access to the router is enabled by default. Remote management access to the router and all management access protocols, including Telnet, FTP, and SSH, are disabled by default.

To configure the Junos OS for the first time on a router with a single Routing Engine, follow these steps:

1. Connect a terminal or laptop computer to the router through the console port—a serial port on the front of the router. Only console access to the router is enabled by default.
2. Power on the router and wait for it to boot.

   The Junos OS boots automatically. The boot process is complete when you see the **login:** prompt on the console.
3. Log in as the user **root**.

   Initially, the **root** user account requires no password. You can see that you are the **root** user, because the prompt on the router shows the username **root@#**.
4. Start the Junos OS command-line interface (CLI):

   root@# **cli**
   root@>
5. Enter Junos OS configuration mode:

   cli> **configure**
   [edit]
   root@#
6. Configure the name of the router (the router hostname). We do not recommend spaces in the router name. However, if the name does include spaces, enclose the entire name in quotation marks (" ").

   [edit]
   root@# **set system host-name** ***hostname***
7. Configure the router's domain name:

   [edit]
   root@# **set system domain-name** ***domain-name***

NOTE: Before you begin Step 8, see Supported Routing Engines by Chassis to find the management Ethernet interface that you should use to perform this configuration.

8. Configure the IP address and prefix length for the router management Ethernet interface. The management Ethernet interface provides a separate out-of-band management network for the router.

   - For devices that use management Ethernet interface fxp0:

     [edit]
     root@# **set interfaces fxp0 unit 0 family inet address** ***address/prefix-length***

   - For devices that use management Ethernet interface em0:

     [edit]
     root@# **set interfaces em0 unit 0 family inet address** ***address/prefix-length***

   To use em0 as an out-of-band management Ethernet interface, you must configure its logical port, em0.0, with a valid IP address.

9. Configure the IP address of a backup or default router. This device is called the backup router, because it is used only while the routing protocol process is not running. Choose a router that is directly connected to the local router by way of the management interface. The router uses this backup router only when it is booting and only or when the Junos routing software (the routing protocol process, rpd) is not running.

   For routers with two Routing Engines, the backup Routing Engine, **RE1**, uses the backup router as a default gateway after the router boots. This enables you to access the backup Routing Engine. (**RE0** is the default master Routing Engine.)

   NOTE: The backup router Routing Engine does not support more than 16 destinations. If you configure more than 16 destinations on the backup Routing Engine, the Junos OS ignores any destination addresses after the sixteenth address and displays a commit-time warning message to this effect.

   [edit]
   root@# **set system backup-router** ***address***

10. Configure the IP address of a DNS server. The router uses the DNS name server to translate hostnames into IP addresses.

    [edit]
    root@# **set system name-server** ***address***

11. Set the root password, entering either a clear-text password that the system will encrypt, a password that is already encrypted, or an SSH public key string.

    Choose one of the following:

    a. To enter a clear-text password, use the following command:

       [edit]
       root@# **set system root-authentication plain-text-password**
       New password: *type password*
       Retype new password: *retype password*

    b. To enter a password that is already encrypted, use the following command:

       [edit]

```
root@# set system root-authentication encrypted-password encrypted-password
```

c. To enter an SSH public key, use the following command:

```
[edit]
root@# set system root-authentication ssh-rsa key
```

12. Optionally, display the configuration statements:

```
[edit]
root@ show
system {
  host-name hostname;
  domain-name domain.name;
  backup-router address;
  root-authentication {
    (encrypted-password "password" | public-key);
    ssh-dsa "public-key";
    ssh-ecdsa "public-key";
    ssh-rsa "public-key";
  }
  name-server {
    address;
  }
  interfaces {
    fxp0 {
      unit 0 {
        family inet {
          address address ;
        }
      }
    }
  }
}
```

On routers that use management Ethernet interface em0, you will see em0 in place of fxp0 in the **show** command output.

13. Commit the configuration, which activates the configuration on the router:

```
[edit]
root@# commit
```

After committing the configuration, you see the newly configured hostname appear after the username in the prompt—for example, **user@host#**.

The defaults for Junos OS are now set on the router.

If you want to configure additional Junos OS properties at this time, remain in the CLI configuration mode and add the necessary configuration statements. You need to commit your configuration changes to activate them on the router.

14. Exit from the CLI configuration mode.

```
[edit]
root@hostname# exit
root@hostname>
```

15. Back up the configuration on the hard drive.

After you have installed the software on the router, committed the configuration, and are satisfied that the new configuration is successfully running, you should issue the **request system snapshot** command to back up the new software to the **/altconfig** file system. If you do not issue the **request system snapshot** command, the configuration on the alternate boot device will be out of sync with the configuration on the primary boot device.

The **request system snapshot** command causes the root file system to be backed up to **/altroot**, and **/config** to be backed up to **/altconfig**. The root and **/config** file systems are on the router's CompactFlash card, and the **/altroot** and **/altconfig** file systems are on the router's hard disk.

NOTE: After you issue the **request system snapshot** command, you cannot return to the previous version of the software, because the running copy and the backup copy of the software are identical.

Related Documentation

- Initial Router or Switch Configuration Using the Junos OS on page 43
- Supported Routing Engines by Chassis
- Format for Specifying IP Addresses, Network Masks, and Prefixes in Junos OS Configuration Statements on page 40
- Default Directories for Junos OS File Storage on the Router or Switch on page 42
- Configuring Basic Router or Switch Properties on page 61
- Configuring Automatic Mirroring of the CompactFlash Card on the Hard Disk Drive on page 71

Configuring Junos OS for the First Time on a Device with Dual Routing Engines

If a router has dual Routing Engines, you can create configuration groups and use the same configuration for both Routing Engines. This ensures that the configuration will not change during a failover scenario because of the identical configuration shared between the Routing Engines.

Configure the hostnames and addresses of the two Routing Engines using configuration groups at the **[edit groups]** hierarchy level. Use the reserved configuration group **re0** for the Routing Engine in slot 0 and **re1** for the Routing Engine in slot 1 to define Routing Engine-specific parameters. Configuring **re0** and **re1** groups enables both Routing Engines to use the same configuration file.

Use the **apply-groups** statement to reproduce the configuration group information in the main part of the configuration.

The **commit synchronize** command commits the same configuration on both Routing Engines. The command makes the active or applied configuration the same for both Routing Engines with the exception of the groups, **re0** being applied to only **RE0** and **re1** being applied only to **RE1**. If you do not synchronize the configurations between two Routing Engines and one of them fails, the router may not forward traffic correctly, because the backup Routing Engine may have a different configuration.

To initially configure a router with dual Routing Engines, follow these steps:

1. Go to *"Configuring Junos OS for the First Time on a Router or Switch with a Single Routing Engine" on page 51* and follow Step 1 through Step 5 to initially configure the backup Routing Engine.
2. Create the configuration group **re0**. The **re0** group is a special group designator that is only used by **RE0** in a redundant routing platform.

   [edit]
   root@host# **set groups re0**

3. Navigate to the **groups re0** level of the configuration hierarchy.

   [edit]
   root@host# **edit groups re0**

4. Specify the router hostname.

   [edit groups re0]
   root@host# **set system host-name** ***host-name***

   NOTE: The hostname specified in the router configuration is not used by the DNS server to resolve to the correct IP address. This hostname is used to display the name of the Routing Engine in the CLI. For example, the hostname appears at the command-line prompt when the user is logged in to the CLI:

   user-name@host-name>

NOTE: Before you begin Step 5, see *Supported Routing Engines by Chassis* to find the management Ethernet interface that you should use to perform this configuration.

5. Configure the IP address and prefix length for the router management Ethernet interface. The management Ethernet interface provides a separate out-of-band management network for the router.

   - For routers that use management Ethernet interface fxp0:

     ```
     [edit groups]
     root@host# set interfaces fxp0 unit 0 family inet address address/prefix-length
     ```

   - For routers that use management Ethernet interface em0:

     ```
     [edit groups]
     root@host# set interfaces em0 unit 0 family inet address address/prefix-length
     ```

   To use em0 as an out-of-band management Ethernet interface, you must configure its logical port, em0.0, with a valid IP address.

6. Set the loopback interface address for the **re0** configuration group:

   ```
   [edit groups]
   root@host# set re0 interfaces lo0 unit 0 family inet address address/prefix-length
   ```

7. Return to the top level of the hierarchy.

   ```
   [edit groups re0]
   root@host# top
   ```

8. Create the configuration group **re1**.

   ```
   [edit]
   root@host# set groups re1
   ```

9. Navigate to the **groups re1** level of the configuration hierarchy.

   ```
   [edit]
   root@host# edit groups re1
   ```

10. Specify the router hostname.

    ```
    [edit groups re1]
    root@host# set system host-name host-name
    ```

NOTE: Before you begin Step 11, see *Supported Routing Engines by Chassis* to find the management Ethernet interface that you should use to perform this configuration.

11. Configure the IP address and prefix length for the router management Ethernet interface.

    - For routers that use management Ethernet interface fxp0:

      ```
      [edit groups]
      root@host# set interfaces fxp0 unit 0 family inet address address/prefix-length
      ```

- For routers that use management Ethernet interface em0:

  ```
  [edit groups]
  root@host# set interfaces em0 unit 0 family inet address address/prefix-length
  ```

  To use em0 as an out-of-band management Ethernet interface, you must configure its logical port, em0.0, with a valid IP address.

12. Set the loopback interface address for **re1** configuration group:

    ```
    [edit groups]
    root@host# set re1 interfaces lo0 unit 0 family inet address address/prefix-length
    ```

13. Return to the top level of the hierarchy.

    ```
    [edit groups re0]
    root@host# top
    ```

14. Configure the **apply-groups** statement to reproduce the configuration group information to the main part of the configuration and to specify the group application order.

    ```
    [edit]
    root@host# set apply-groups [ re0 re1 ]
    ```

15. Configure Routing Engine redundancy:

    ```
    [edit]
    root@host# set chassis redundancy routing-engine 0 master
    root@host# set chassis redundancy routing-engine 1 backup
    ```

16. Save the configuration change on both Routing Engines:

    ```
    [edit]
    user@host> commit synchronize
    ```

After the configuration changes are saved, complete the management console configuration.

1. Configure the IP address of the DNS server.

   ```
   [edit ]
   root@host# set system name-server address
   ```

2. Configure the router domain name:

   ```
   [edit ]
   root@host# set system domain-name domain-name
   ```

3. Configure the IP address of a backup or default router. A backup router is used only while the routing protocol process is not running. Choose a router that is directly connected to the local router by way of the management interface. The router uses this backup router only when it is booting and or when the Junos routing software (the routing protocol process, rpd) is not running. For more information, see "Configuring a Backup Router" on page 69.

   For routers with two Routing Engines, the backup Routing Engine, **RE1**, uses the backup router as a default gateway after the router boots. This enables you to access the backup Routing Engine. (**RE0** is the default master Routing Engine.)

NOTE: The backup router Routing Engine does not support more than 16 destinations. If you configure more than 16 destinations on the backup Routing Engine, the Junos OS ignores any destination addresses after the sixteenth address and displays a commit-time warning message to this effect.

```
[edit]
root@host# set system backup-router address
```

4. Set the root password by choosing one of the following:

   a. To enter a clear-text password, use the following command:

   ```
   [edit]
   root@host# set system root-authentication plain-text-password
   New password: type password
   Retype new password: retype password
   ```

   b. To enter a password that is already encrypted, use the following command:

   ```
   [edit]
   root@host# set system root-authentication encrypted-password
     encrypted-password
   ```

   c. To enter an SSH public key, use the following command:

   ```
   [edit]
   root@host# set system root-authentication ssh-rsa key
   ```

5. Optionally, display the configuration statements:

```
[edit]
root@ show
system {
  host-name hostname;
  domain-name domain.name;
  backup-router address;
  root-authentication {
    (encrypted-password "password" | public-key);
    ssh-dsa "public-key";
    ssh-ecdsa "public-key";
    ssh-rsa "public-key";
  }
  name-server {
    address;
  }
  interfaces {
    fxp0 {
      unit 0 {
        family inet {
          address address ;
        }
      }
    }
  }
}
```

On routers that use management Ethernet interface em0, you will see em0 in place of fxp0 in the **show** command output.

6. After you have installed the new software and are satisfied that it is successfully running, issue the **request system snapshot** command to back up the new software on both master and backup Routing Engines.

   ```
   {master}
   user@host> request system snapshot
   ```

   The root file system is backed up to **/altroot**, and **/config** is backed up to **/altconfig**. The root and **/config** file systems are on the router's CompactFlash card, and the **/altroot** and **/altconfig** file systems are on the router's hard disk.

   NOTE: After you issue the **request system snapshot** command, you cannot return to the previous version of the software, because the running copy and backup copy of the software are identical.

For information about creating configuration groups, see CLI User Guide.

For information about configuring high availability features for redundant Routing Engine systems and the **re0** group, see Junos OS High Availability Configuration Guide.

Related Documentation

- Configuring Junos OS for the First Time on a Router or Switch with a Single Routing Engine on page 51
- Supported Routing Engines by Chassis
- Initial Router or Switch Configuration Using the Junos OS on page 43
- Format for Specifying IP Addresses, Network Masks, and Prefixes in Junos OS Configuration Statements on page 40
- Default Directories for Junos OS File Storage on the Router or Switch on page 42
- Configuring Basic Router or Switch Properties on page 61
- Configuring Automatic Mirroring of the CompactFlash Card on the Hard Disk Drive on page 71

Set Up Routing Engine Configuration Groups

In a router with two Routing Engines, one configuration should be shared between both Routing Engines. This ensures that both Routing Engine configurations are identical. Within this configuration, create two Routing Engine groups, one for each Routing Engine. Within these groups, you specify the Routing Engine–specific parameters.

For more information about creating configuration groups, see CLI User Guide.

For more information about the initial configuration for redundant Routing Engine systems and the re0 group, see *Junos OS High Availability Configuration Guide*.

1. Create the configuration group **re0**. The **re0** group is a special group designator that is only used by **RE0** in a redundant routing platform.

   ```
   [edit]
   root# set groups re0
   ```

2. Navigate to the **groups re0** level of the configuration hierarchy.

   ```
   [edit]
   root#  edit groups re0
   ```

3. Specify the router hostname.

   ```
   [edit groups re0]
   root# set system host-name host-name
   ```

   NOTE: The hostname specified in the router configuration is not used by the DNS server to resolve to the correct IP address. This hostname is used to display the name of the Routing Engine in the CLI. For example, the hostname appears at the command-line prompt when the user is logged in to the CLI:

   user-name@host-name>

4. Configure the IP address and prefix length for the router Ethernet interface.

   - For all devices *except* the TX Matrix Plus router, T1600 or T4000 routers in a routing matrix, and PTX Series Packet Transport Switches:

     ```
     [edit]
     root@# set interfaces fxp0 unit 0 family inet address address/prefix-length
     ```

   - For TX Matrix Plus router, and T1600 or T4000 routers in a routing matrix only, and PTX Series Packet Transport Switches:

     ```
     [edit]
     root@# set interfaces em0 unit 0 family inet address address/prefix-length
     ```

     To use **em0** as an out-of-band management Ethernet interface, you must configure its logical port, **em0.0**, with a valid IP address.

   - For a T1600 or T4000 standalone router (not connected to a TX Matrix Plus router and not in a routing matrix):

```
[edit]
root@# set interfaces fxp0 unit 0 family inet address address/prefix-length
```

5. Return to the top level of the hierarchy.

```
[edit groups re0]
root# top
```

6. Create the configuration group **re1**.

```
[edit]
root# set groups re1
```

7. Navigate to the **groups re1** level of the configuration hierarchy.

```
[edit]
root# edit groups re1
```

8. Specify the router hostname.

```
[edit groups re1]
root# set system host-name host-name
```

9. Configure the IP address and prefix length for the router Ethernet interface.

   - For all devices *except* the TX Matrix Plus router, T1600 or T4000 routers in a routing matrix, and PTX Series Packet Transport Switches:

     ```
     [edit]
     root@# set interfaces fxp0 unit 0 family inet address address/prefix-length
     ```

   - For TX Matrix Plus router, and T1600 or T4000 routers in a routing matrix only:

     ```
     [edit]
     root@# set interfaces em0 unit 0 family inet address address/prefix-length
     ```

     To use **em0** as an out-of-band management Ethernet interface, you must configure its logical port, **em0.0**, with a valid IP address.

   - For a T1600 or T4000 standalone router (not connected to a TX Matrix Plus router, and not in a routing matrix):

     ```
     [edit]
     root@# set interfaces fxp0 unit 0 family inet address address/prefix-length
     ```

10. Return to the top level of the hierarchy.

```
[edit groups re0]
root# top
```

11. Specify the group application order.

```
[edit]
root# set apply-groups [ re0 re1 ]
```

Configuring Basic Router or Switch Properties

When you configure the router initially, you must configure the basic properties of a router, such as the router's hostname, IP addresses, and the name of the domain in which the router is located.

To configure basic router properties:

1. Configure the router's hostname.

   See "Configuring the Hostname of the Router or Switch" on page 62

2. Map the router's hostname to IP addresses.

   See "Mapping the Name of the Router to IP Addresses" on page 62.

3. Configure an ISO system identifier for the router.

   See "Configuring an ISO System Identifier for the Router" on page 63.

4. Configure the router's domain name.

   See "Configuring the Domain Name for the Router or Switch" on page 64.

Related Documentation

- Example: Configuring the Name of the Router, IP Address, and System ID on page 63
- Configuring Junos OS for the First Time on a Router or Switch with a Single Routing Engine on page 51
- Configuring Junos OS for the First Time on a Device with Dual Routing Engines on page 55
- Configuring the Physical Location of the Router or Switch on page 75
- Configuring a Backup Router on page 69

Configuring the Hostname of the Router or Switch

To configure the name of the router or switch, include the **host-name** statement at the **[edit system]** hierarchy level:

```
[edit system]
host-name hostname;
```

The name value must be less than 256 characters.

Related Documentation

- Example: Configuring the Name of the Router, IP Address, and System ID on page 63
- Example: Configuring the Name of the Switch, IP Address, and System ID
- Configuring Basic Router or Switch Properties on page 61
- Mapping the Hostname of the Switch to IP Addresses
- host-name

Mapping the Name of the Router to IP Addresses

To map a router's hostname to one or more IP addresses, include the **inet** statement at the **[edit system static-host-mapping *hostname*]** hierarchy level:

```
[edit system]
static-host-mapping {
```

```
    hostname {
        inet [ addresses ];
        alias [ aliases ];
    }
}
```

hostname is the name specified by the **host-name** statement at the **[edit system]** hierarchy level.

For each host, you can specify one or more aliases.

Related Documentation

- Configuring Basic Router or Switch Properties on page 61
- Example: Configuring the Name of the Router, IP Address, and System ID on page 63
- Configuring the Domain Name for the Router or Switch on page 64

Configuring an ISO System Identifier for the Router

For IS-IS to operate on the router, you must configure a system identifier (system ID). The system identifier is commonly the media access control (MAC) address or the IP address expressed in binary-coded decimal (BCD).

To configure an International Organization for Standardization (ISO) system ID, include the **sysid** statement at the **[edit system static-host-mapping *hostname*]** hierarchy level:

```
[edit system]
static-host-mapping {
    hostname {
        sysid system-identifier;
    }
}
```

hostname is the name specified by the **host-name** statement at the **[edit system]** hierarchy level.

system-identifier is the ISO system identifier. It is the 6-byte system ID portion of the IS-IS network service access point (NSAP). We recommend that you use the host's IP address represented in BCD format. For example, the IP address 192.168.1.77 is 1921.6800.1077 in BCD.

Related Documentation

- Configuring Basic Router or Switch Properties on page 61
- Example: Configuring the Name of the Router, IP Address, and System ID on page 63

Example: Configuring the Name of the Router, IP Address, and System ID

The following example shows how to configure the router's name, map the name to an IP address and alias, and configure a system identifier:

```
[edit]
user@host# set system host-name router-sj1
[edit]
user@host# set system static-host-mapping router-sj1 inet 192.168.1.77
```

```
[edit]
user@host# set system static-host-mapping router-sj1 alias sj1
[edit]
user@host# set system static-host-mapping router-sj1 sysid 1921.6800.1077
[edit]
user@host# show
system {
   host-name router-sj1;
   static-host-mapping {
      router-sj1 {
         inet 192.168.1.77;
         alias sj1;
         sysid 1921.6800.1077;
      }
   }
}
```

Related Documentation

- Configuring Basic Router or Switch Properties on page 61

Configuring the Domain Name for the Router or Switch

For each router or switch, you should configure the name of the domain in which the router or switch is located. This is the default domain name that is appended to hostnames that are not fully qualified.

To configure the domain name, include the **domain-name** statement at the **[edit system]** hierarchy level:

```
[edit system]
domain-name domain-name;
```

The following example shows how to configure the domain name:

```
[edit]
user@host# set system domain-name company.net
[edit]
user@host# show
system {
   domain-name company.net;
}
```

Related Documentation

- domain-name on page 128
- domain-name
- Example: Configuring the Domain Name for the Router or Switch on page 64

Example: Configuring the Domain Name for the Router or Switch

The following example shows how to configure the router or switch domain name:

```
[edit]
user@host# set system domain-name company.net
[edit]
```

```
user@host# show
system {
   domain-name company.net;
}
```

Related Documentation

- domain-name
- Configuring the Domain Name for the Router or Switch on page 64

Configuring the Domains to Search When a Router or Switch Is Included in Multiple Domains

If your router or switch is included in several different domains, you can configure those domain names to be searched.

To configure more than one domain to be searched, include the **domain-search** statement at the **[edit system]** hierarchy level:

```
[edit system]
domain-search [ domain-list ];
```

The domain list can contain up to six domain names, with a total of up to 256 characters.

The following example shows how to configure two domains to be searched:

```
[edit system]
domain-search [ domainone.net domainonealternate.com ]
```

Related Documentation

- Example: Configuring the Domain Name for the Router or Switch on page 64
- Configuring a DNS Name Server for Resolving a Hostname into Addresses on page 65

  Configuring a DNS Name Server for Resolving a Hostname into Addresses

Configuring a DNS Name Server for Resolving a Hostname into Addresses

To have the router or switch resolve hostnames into addresses, you must configure one or more Domain Name System (DNS) name servers by including the **name-server** statement at the **[edit system]** hierarchy level:

```
[edit system]
name-server {
   address;
}
```

The following example shows how to configure two DNS name servers:

```
[edit]
user@host# set system name-server 192.168.1.253
[edit]
user@host# set system name-server 192.168.1.254
[edit]
user@host# show
system {
   name server {
```

```
        192.168.1.253;
        192.168.1.254;
    }
}
```

Related Documentation

- Configuring the Domains to Search When a Router or Switch Is Included in Multiple Domains on page 65
- name-server on page 141

Example: Configuring a Proxy Server for License Updates

Requirements

This example uses the following hardware and software components:

- An M Series, MX Series, PTX Series, SRX Series device
- Junos OS Release 11.4 running on the device

Overview

In Junos OS Release 11.4 and later, you can download Juniper Networks license updates using a proxy server. This feature is supported on M Series and SRX Series devices. In earlier releases, downloading license updates was only possible by directly connecting to the Juniper Networks License Management System.

In an enterprise, there might be devices in a private network that might be restricted from connecting to the Internet directly for security reasons. In such scenarios, you can configure a proxy server in the private network to connect to the LMS and download the license updates, and have the routers or devices in the private network connect to the proxy server to download the licenses or license updates. In Figure 2 on page 66, R0 is the router in the private network. P represents the proxy server and LMS represents the Juniper Networks License Management System.

Figure 2: Proxy Server Example

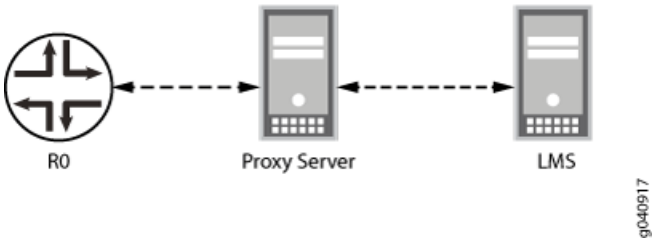

To enable this feature, you configure the device with details of the proxy server at the **[edit system proxy]** hierarchy level.

Configuration

CLI Quick Configuration

To quickly configure this example, copy the following commands, paste them into a text file, remove any line breaks, change any details necessary to match your network configuration, and then copy and paste the commands into the CLI at the **[edit]** hierarchy level.

Router R0

```
set system proxy server 192.168.1.10
set system proxy port 3128
set system proxy username user1
set system proxy password user123
set system license traceoptions file license.log
set system license traceoptions flag all
```

Step-by-Step Procedure

The following example requires you to navigate various levels in the configuration hierarchy. For information about navigating the CLI, see the CLI User Guide.

To configure the proxy server properties on the device:

1. Configure the proxy server IP address or hostname.

   ```
   [edit system proxy]
   user@hostR0# set server 192.168.1.10
   ```

2. Configure a port number (ranging from 0 through 65535) used to connect to the proxy server.

   ```
   [edit system proxy]
   user@hostR0# set port 3128
   ```

3. Configure the password as configured on the proxy server.

   ```
   [edit system proxy]
   user@R0# set password user123
   ```

4. Configure the username as configured on the proxy server.

   ```
   [edit system proxy]
   user@R0# set username user1
   ```

5. Configure trace options for licenses.

   ```
   [edit system license]
   user@R0# set traceoptions file license.log
   user@R0# set traceoptions flag all
   ```

Results

From configuration mode, confirm your configuration by entering the **show system** command. If the output does not display the intended configuration, repeat the instructions in this example to correct the configuration.

```
user@R0# show system
proxy {
   server 192.168.1.10;
   port 3128;
   username user1;
```

```
    password "$9$nLHU/t0B1hyeMIEML7V4okqm"; ## SECRET-DATA
  }
  license {
    traceoptions {
      file license.log;
      flag all;
    }
  }
```

If you are done configuring the router, enter **commit** from configuration mode.

Verification

Confirm that the configuaration is working properly.

Verifying That the License Is Downloaded

Purpose Verify that the license is downloaded using the proxy server.

Action

1. Delete the existing license using the **request system license delete *license-filename*** command.
2. Download the license using the **request system license update** command.

```
user@R0> request system license update
Request to automatically update license keys from https://ae1.juniper.net has
 been sent, use 'show system license' to check status.
```

3. Verify the license using the **show system license** command.

```
user@R0> show system license
License usage:
                                 Licenses     Licenses    Licenses    Expiry
  Feature name                       used    installed      needed
  av_key_kaspersky_engine               0            1           0
2011-11-17 16:00:00 PST
  idp-sig                               1            1           0
2011-11-17 16:00:00 PST
  ax411-wlan-ap                        0            2           0    permanent

Licenses installed:
  License identifier: JUNOS282725
  License version: 2
  Valid for device: AG2909AA0014
  Features:
    av_key_kaspersky_engine - Kaspersky AV
      date-based, 2010-11-21 16:00:00 PST - 2011-11-17 16:00:00 PST
```

4. Check the system log file to verify that the license is downloaded using the proxy server.

```
user@R0> show /var/log/license.log
Nov 18 08:14:14 Received SIGHUP signal
Nov 18 08:14:17 GRES not enabled.
Nov 18 08:14:17 License download proxy server configured.
Nov 18 08:14:17 License download proxy server: 192.168.1.10
Nov 18 08:14:17 License download proxy server port: 3128
Nov 18 08:14:17 License download proxy user name: user1
```



```
Nov 18 08:14:17 License download proxy user password: xxx
Nov 18 08:14:18 Access configuration autoupdate url: ae1.juniper.net
Nov 18 08:14:18 Access configuration renew-before-expiration: 60 days
Nov 18 08:14:18 Access configuration renew-interval: 1 hours
Nov 18 08:16:53 Received SIGUSR1 signal, license download start...
Nov 18 08:16:58 env HTTP_PROXY=http://192.168.1.10/
Nov 18 08:16:58 env HTTP_PROXY_AUTH="basic:*:abc:xxx"
HTTP_PROXY_AUTH="basic:*:regress:MaRtInI" /usr/sbin/license_fetch -o
/tmp/license.keys.1053
'https://ae1.juniper.net/junos/key_retrieval?serial=AG2909AA0014=11.4I'
2> /tmp/license.status.1053
Nov 18 08:17:03 /tmp/license.keys.1053                                505 kB
505 kBps
```

Related Documentation

- password (Proxy Systems) on page 141
- port on page 143
- proxy on page 146
- server on page 150
- username on page 154

Configuring a Backup Router

When a router or switch is booting, the routing protocol process (rpd) is not running; therefore, the router or switch has no static or default routes. To ensure the router or switch is reachable over the network while it boots or if the rpd fails to start properly, configure a backup router (running IP version 4 [IPv4] or IP version 6 [IPv6]), which is a router that is directly connected to the local router or switch (that is, on the same subnet) through its private management interface (e.g., fxp0).

By default, all hosts (default route) are reachable through the backup router. To achieve network reachability while loading, configuring, and recovering the router or switch, but without installing a default route in the forwarding table, include the **destination** option, specifying an address that is reachable through the backup router. Specify the address in the format ***network/mask-length*** so that the entire network is reachable through the backup router.

Any destinations defined by the backup router are not visible in the routing table, they are only visible in the local forwarding table when rpd is not running. Therefore, a recommended best practice is to also include the destinations of the backup router configured as static routes with the retain flag at the **[edit routing-options]** hierarchy level. The retain flag is necessary to allow the static route to remain in the forwarding table when rpd stops running, because the routing table does not exist if rpd is not running.

On systems with dual redundant Routing Engines, the backup Routing Engine's reachability through the private management interface is based only on the functionality of the **backup-router** configuration, it is not based on whether the rpd is running. The backup router adds the destination prefix upon bootup, whereas configuring a static route requires rpd to run first before installing the destination prefix. If rpd is allowed to run on the backup

Routing Engine, then a destination can be ad ded in the routing table and the forwarding table by configuring static route with retain.

NOTE: Active routes and more specific routes take precedence over destination prefixes defined with the backup-router statement.

The following topics describe how to configure a backup router running IPv4 and IPv6, respectively:

1. Configuring a Backup Router Running IPv4 on page 70
2. Configuring a Backup Router Running IPv6 on page 71

Configuring a Backup Router Running IPv4

To configure a backup router running IPv4, include the **backup-router** statement at the **[edit system]** hierarchy level:

```
[edit system]
backup-router address <destination destination-address>;
```

NOTE: The Routing Engine on the backup router only supports 16 destination addresses. If you configure more than 16 destination addresses, the Junos OS ignores destination addresses after the sixteenth address and displays a commit-time warning message to this effect.

The address defined in the **backup-router** statement is not installed into the routing table, it is only installed to the forwarding table. To install the destination address definition in the routing table, you can also configure a static route with the same destination configuration as the backup-router. Both the backup-router and the static route will install the destination address into the forwarding table, however, because using only a static route requires rpd to run, the preferred method is to use the backup-router configuration.

Use this example to configure a backup router running IPv4 and have its address remain in the routing and forwarding tables:

```
[edit]
system {
   backup-router 192.168.1.254 destination 208.197.1.0/24;
}
routing-options {
   static {
      route 208.197.1.0/24 {
         next-hop 192.168.1.254;
         retain;
      }
   }
}
```

Configuring a Backup Router Running IPv6

To configure a backup router running IPv6, include the **inet6-backup-router** statement at the **[edit system]** hierarchy level:

```
[edit system]
inet6-backup-router "address <destination destination-address>";
```

The following example shows how to configure a backup router running IPv6 and have its address remain in the routing and forwarding tables:

```
[edit]
system {
   inet6-backup-router 8:3::1 destination abcd::/48;
}
routing-options {
   rib inet6.0 {
      static {
         route abcd::/48 {
            next-hop 8:3::1;
            retain;
         }
      }
   }
}
```

Related Documentation

- Configuring Junos OS for the First Time on a Router or Switch with a Single Routing Engine on page 51
- Configuring Junos OS for the First Time on a Device with Dual Routing Engines on page 55
- Requirements for Routers with a Backup Router Configuration.

Configuring Automatic Mirroring of the CompactFlash Card on the Hard Disk Drive

You can direct the hard disk to automatically mirror the contents of the CompactFlash card. When you include the **mirror-flash-on-disk** statement, the hard disk maintains a synchronized mirror copy of the CompactFlash card contents. Data written to the CompactFlash card is simultaneously updated in the mirrored copy of the hard disk. If the CompactFlash card fails to read data, the hard disk automatically retrieves its mirrored copy of the CompactFlash card. This feature is not available on the J Series routers.

CAUTION: We recommend that you disable flash-to-disk mirroring when you upgrade or downgrade the router.

You cannot issue the **request system snapshot** command while flash-to-disk mirroring is enabled.

To configure the mirroring of the CompactFlash card to the hard disk, include the **mirror-flash-on-disk** statement at the **[edit system]** hierarchy level:

```
[edit system]
mirror-flash-on-disk;
```

NOTE: After you have enabled or disabled the **mirror-flash-on-disk** statement, you must reboot the router for your changes to take effect. To reboot, issue the **request system reboot** command.

Related Documentation

- Using Junos OS to Specify the Number of Configurations Stored on the CompactFlash Card on page 72
- Configuring Junos OS for the First Time on a Router or Switch with a Single Routing Engine on page 51

Using Junos OS to Specify the Number of Configurations Stored on the CompactFlash Card

By default, the Junos OS saves the current configuration and three previous versions of the committed configuration on the CompactFlash card. The currently operational Junos OS configuration is stored in the file **juniper.conf.gz**, and the last three committed configurations are stored in the files **juniper.conf.1.gz**, **juniper.conf.2.gz**, and **juniper.conf.3.gz**. These four files are located in the router or switch'sCompactFlash card in the directory **/config**.

In addition to saving the current configuration and the current operational version, you can also specify how many previous versions of the committed configurations you want stored on the CompactFlash card in the directory **/config**. The remaining previous versions of committed configurations are stored in the directory **/var/db/config** on the hard disk. This is useful when you have very large configurations that might not fit on the CompactFlash card.

To specify how many previous versions of the committed configurations you want stored on the CompactFlash card, include the **max-configurations-on-flash** statement at the **[edit system]** hierarchy level:

```
[edit system]
max-configurations-on-flash number;
```

number is a value from 0 through 49.

Related Documentation

- Configuring Automatic Mirroring of the CompactFlash Card on the Hard Disk Drive on page 71
- max-configurations-on-flash

Using Junos OS to Configure a Router or Switch to Transfer Its Configuration to an Archive Site

You can configure a router or switch to transfer its configuration to an archive file periodically. The following tasks describe how to transfer the configuration to an archive site:

1. Configuring the Router or Switch to Transfer Its Currently Active Configuration to an Archive on page 73
2. Configuring the Transfer Interval for Periodic Transfer of the Active Configuration to an Archive Site on page 73
3. Configuring Transfer of the Current Active Configuration When a Configuration Is Committed on page 74
4. Configuring Archive Sites for Transfer of Active Configuration Files on page 74

Configuring the Router or Switch to Transfer Its Currently Active Configuration to an Archive

If you want to back up your device's current configuration to an archive site, you can configure the router or switch to transfer its currently active configuration by FTP or secure copy (SCP) periodically or after each commit.

To configure the router or switch to transfer its currently active configuration to an archive site, include statements at the **[edit system archival configuration]** hierarchy level:

```
[edit system archival configuration]
archive-sites {
   ftp://username<:password>@host-address<:port>/url-path;
   scp://username<:password>@host-address<:port>/url-path;
}
transfer-interval interval;
transfer-on-commit;
```

NOTE: When specifying a URL in a Junos OS statement using an IPv6 host address, you must enclose the entire URL in quotation marks ("") and enclose the IPv6 host address in brackets ([ ]). For example, "ftp://*username*<:*password*>@[*ipv6-host-address*]<:*port*>/*url-path*"

Configuring the Transfer Interval for Periodic Transfer of the Active Configuration to an Archive Site

To configure the router or switch to periodically transfer its currently active configuration to an archive site, include the **transfer-interval** statement at the **[edit system archival configuration]** hierarchy level:

```
[edit system archival configuration]
transfer-interval interval;
```

The ***interval*** is a period of time ranging from 15 through 2880 minutes.

Configuring Transfer of the Current Active Configuration When a Configuration Is Committed

To configure the router or switch to transfer its currently active configuration to an archive site each time you commit a candidate configuration, include the **transfer-on-commit** statement at the **[edit system archival configuration]** hierarchy level:

```
[edit system archival configuration]
transfer-on-commit;
```

NOTE: When specifying a URL in a Junos OS statement using an IPv6 host address, you must enclose the entire URL in quotation marks ("") and enclose the IPv6 host address in brackets ([ ]). For example, "scp:*//username<:password>@[ipv6-host-address]<:port>/url-path*"

Configuring Archive Sites for Transfer of Active Configuration Files

When you configure the router or switch to transfer its configuration files, you specify an archive site to which the files are transferred. If you specify more than one archive site, the router or switch attempts to transfer files to the first archive site in the list, moving to the next site only if the transfer fails.

When you use the **archive-sites** statement, you can specify a destination as an FTP URL, or SCP-style remote file specification. The URL type **file://** is also supported.

To configure the archive site, include the **archive-sites** statement at the **[edit system archival configuration]** hierarchy level:

```
[edit system archival configuration]
archive-sites {
   ftp://username@host:<port>url-path password password;
   scp://username@host:<port>url-path password password;
   file:///<path>/<filename>;
}
```

NOTE: When specifying a URL in a Junos OS statement using an IPv6 host address, you must enclose the entire URL in quotation marks ("") and enclose the IPv6 host address in brackets ([ ]). For example, "scp:*//username<:password>@[ipv6-host-address]<:port>/url-path*"

When you specify the archive site, do not add a forward slash (/) to the end of the URL.

The destination filename is saved in the following format, where *n* corresponds to the number of the compressed configuration rollback file that has been archived:

*<router-name>*_juniper.conf.*n*.gz_*YYYYMMDD_HHMMSS*

NOTE: The time included in the destination filename is always in Coordinated Universal Time (UTC) regardless of whether the time on the router is configured as UTC or the local time zone. The default time zone on the router or switch is UTC.

Configuring the Physical Location of the Router or Switch

To configure the physical location of the router or switch, you can configure the following options for the **location** statement at the **[edit system]** hierarchy level:

- **altitude** ***feet***—Number of feet above sea level.
- **building** ***name***—Name of the building, 1 to 28 characters in length. If the string contains spaces, enclose it in quotation marks (" ").
- **country-code** ***code***—Two-letter country code.
- **floor** ***number***—Floor in the building.
- **hcoord** ***horizontal-coordinate***—Bellcore Horizontal Coordinate.
- **lata** ***service-area***—Long-distance service area.
- **latitude** ***degrees***—Latitude in degree format.
- **longitude** ***degrees***—Longitude in degree format.
- **npa-nxx** ***number***—First six digits of the phone number (area code and exchange).
- **postal-code** ***postal-code***—Postal code.
- **rack** ***number***—Rack number.
- **vcoord** ***vertical-coordinate***—Bellcore Vertical Coordinate.

The following example shows how to configure the physical location of the router or switch:

```
[edit system]
location {
    altitude feet;
    building name;
    country-code code;
    floor number;
    hcoord horizontal-coordinate;
    lata service-area;
    latitude degrees;
    longitude degrees;
    npa-nxx number;
    postal-code postal-code;
    rack number;
    vcoord vertical-coordinate;
}
```

Related Documentation

- Configuring Basic Router or Switch Properties on page 61

Configuring the Root Password

The Junos OS is preinstalled on the router or switch. When the router or switch is powered on, it is ready to be configured. Initially, you log in as the user “root” with no password.

NOTE: If you configure a blank password using the **encrypted-password** statement at the **[edit system root-authentication]** hierarchy level for root authentication, you can commit a configuration, but you are *not* able to log in as superuser and gain root level access to the router or switch.

After you log in, you should configure the root (superuser) password by including the **root-authentication** statement at the **[edit system]** hierarchy level and configuring one of the password options:

```
[edit system]
root-authentication {
   (encrypted-password "password"| plain-text-password);
   load-key-file URL filename;
   ssh-dsa “public-key” <from hostname>;
   ssh-ecdsa “public-key” <from hostname>;
   ssh-rsa “public-key” <from hostname>;
}
```

If you configure the **plain-text-password** option, you are prompted to enter and confirm the password:

```
[edit system]
user@host# set root-authentication plain-text-password
New password: type password here
Retype new password: retype password here
```

The default requirements for plain-text passwords are:

- The password must be between 6 and 128 characters long
  - You can include most character classes in a password (uppercase letters, lowercase letters, numbers, punctuation marks, and other special characters). Control characters are not recommended.
  - Valid passwords must contain at least one change of case or character class.

You can use the **load-key-file** *URL filename* statement to load an SSH key file that was previously generated using **ssh-keygen**. The *URL filename* is the path to the file’s location and name. When using this option, the contents of the key file are copied into the configuration immediately after entering the **load-key-file** *URL* statement. This command loads RSA (SSH version 1 and SSH version 2) and DSA (SSH version 2) public keys.

Optionally, you can use the **ssh-dsa**, **ssh-ecdsa**, or **ssh-rsa** statements to directly configure SSH RSA, DSA, or ECDSA keys to authenticate root logins. You can configure more than

one public key for SSH authentication of root logins as well as for user accounts. When a user logs in as root, the public keys are referenced to determine whether the private key matches any of them.

To view the SSH keys entries, use the configuration mode **show** command. For example:

```
[edit system]
user@host# set root-authentication load-key-file my-host:.ssh/id_dsa.pub
.file.19692 | 0 KB | 0.3 kB/s | ETA: 00:00:00 | 100%
[edit system]
user@host# show
root-authentication {
   ssh-rsa "1024 35 9727638204084251055468226757249864241630322
      2074049625283903820386901415845349641700196106083587229 6
      1563475749182736033612764418742659468932077391083448101 2
      6831259577226254616679992783161235004386609158662838224 8
      9746732605661192148953981396556156378621194032768780653 8
      1696020274916416373591326939634400844 3 boojum@juniper.net"; #
      SECRET-DATA
}
```

Junos-FIPS software has special password requirements. FIPS passwords must be between 10 and 20 characters in length. Passwords must use at least three of the five defined character sets (uppercase letters, lowercase letters, digits, punctuation marks, and other special characters). If Junos-FIPS is installed on the router or switch, you cannot configure passwords unless they meet this standard. If you use the **encrypted-password** option, then a null-password (empty) is not permitted.

You cannot configure a blank password for **encrypted-password** using blank quotation marks (" "). You must configure a password whose number of characters range from 1 through 128 characters and enclose the password in quotation marks.

Related Documentation

- Example: Configuring the Root Password
- Example: Configuring a Plain-Text Password for Root Logins on page 78
- Example: Configuring SSH Authentication for Root Logins on page 78
- Example: Changing the Requirements for Junos OS Plain-Text Passwords on page 81
- Recovering the Root Password

Example: Configuring the Root Password

The following example shows how to configure the root password:

```
[edit]
user@switch# set system root-authentication encrypted-password
   "$1$14c5.$sBopasddsdfs0"
[edit]
user@switch# show
system {
   root-authentication {
      encrypted-password "$1$14c5.$sBopasddsdfs0";
   }
```

```
}
```

Related Documentation

- Configuring the Root Password on page 76
- Example: Configuring a Plain-Text Password for Root Logins on page 78
- Configuring the Root Password

Example: Configuring a Plain-Text Password for Root Logins

The following example shows how to set a plain-text password for root logins:

```
[edit]
user@switch# set system root-authentication plain-text-password
New password: type root password
Retype new password: retype root password
[edit]
user@switch# show
system {
   root-authentication {
      encrypted-password "$1$14c5.$sBopasddsdfs0";
   }
}
```

Related Documentation

- Configuring the Root Password on page 76

Example: Configuring SSH Authentication for Root Logins

The following example shows how to configure two public DSA keys for SSH authentication of root logins:

```
[edit system]
root-authentication {
   encrypted-password "$1$1wp5tqMX$uy/u5H7OdXTwfWTmeJWXe/";
   ## SECRET-DATA;
   ssh-dsa "2354 95 9304@boojum.per";
   ssh-dsa "0483 02 8362@ecbatana.per";
}
```

Related Documentation

- Configuring the Root Password on page 76
- Special Requirements for Junos OS Plain-Text Passwords on page 78

Special Requirements for Junos OS Plain-Text Passwords

Junos OS has special requirements when you create plain-text passwords on a router or switch. Table 7 on page 79 shows the default requirements.

Table 7: Special Requirements for Plain-Text Passwords

Junos OS	Junos-FIPS
The password must be between 6 and 128 characters long.	FIPS passwords must be between 10 and 20 characters long
You can include most character classes in a password (uppercase letters, lowercase letters, numbers, punctuation marks, and other special characters). Control characters are not recommended.	You can include most character classes in a password (uppercase letters, lowercase letters, numbers, punctuation marks, and other special characters). Control characters are not recommended.
Valid passwords must contain at least one change of case or character class.	Passwords must use at least three of the five defined character classes (uppercase letters, lowercase letters, numbers, punctuation marks, and other special characters).

You can change the requirements for plain-text passwords.

Junos OS supports the following five character classes for plain-text passwords:

- Lowercase letters
- Uppercase letters
- Numbers
- Punctuation
- Special characters: ! @ # $ % ^ & * , +< > : ;

Control characters are not recommended.

You can include the **plain-text-password** statement at the following hierarchy levels:

- **[edit system diag-port-authentication]**
- **[edit system pic-console-authentication]**
- **[edit system root-authentication]**
- **[edit system login user *username* authentication]**

  The **change-type** statement specifies whether the password is checked for the following:

  - The total number of character sets used (**character-set**)
  - The total number of character set changes (**set-transitions**)

  For example, the following password:

  MyPassWd@2

  has four character sets (uppercase letters, lowercase letters, special characters, and numbers) and seven character set changes (**M–y**, **y–P**, **P–a**, **s–W**, **W–d**, **d–@**, and **@–2**).

The **change-type** statement is optional. If you omit the **change-type** option, Junos-FIPS plain-text passwords are checked for character sets, and Junos OS plain-text passwords are checked for character set changes.

The **minimum-changes** statement specifies how many character sets or character set changes are required for the password. This statement is optional. If you do not use the **minimum-changes** statement, character sets are not checked for Junos OS. If the **change-type** statement is configured for the **character-set** option, then the **minimum-changes** value must be **5** or less, because Junos OS only supports five character sets.

The **format** statement specifies the hash algorithm (**md5**, **sha1** or **des**) for authenticating plain-text passwords. This statement is optional. For Junos OS, the default format is **md5**. For Junos-FIPS, only **sha1** is supported.

The **maximum-length** statement specifies the maximum number of characters allowed in a password. This statement is optional. By default, Junos OS passwords have no maximum; however, only the first 128 characters are significant. Junos-FIPS passwords must be 20 characters or less. The range for Junos OS maximum-length passwords is from 20 to 128 characters.

The **minimum-length** statement specifies the minimum number of characters required for a password. This statement is optional. By default, Junos OS passwords must be at least 6 characters long, and Junos-FIPS passwords must be at least 10 characters long. The range is from 6 to 20 characters.

Changes to password requirements do not take effect until the configuration is committed. When requirements change, only newly created, plain-text passwords are checked; existing passwords are not checked against the new requirements.

The default configuration for Junos OS plain-text passwords is:

```
[edit system login]
passwords {
   change-type character-sets;
   format md5;
   minimum-changes 1;
   minimum-length 6;
}
```

The default configuration for Junos-FIPS plain-text passwords is:

```
[edit system login]
passwords {
   change-type set-transitions;
   format sha1;
   maximum-length 20;
   minimum-changes 3;
   minimum-length 10;
}
```

Related Documentation

- Changing the Requirements for Junos OS Plain-Text Passwords on page 81
- Configuring the Root Password on page 76
- Changing the Requirements for Junos OS Plain-Text Passwords

- Configuring the Root Password

Changing the Requirements for Junos OS Plain-Text Passwords

To change the requirements for plain-text passwords, include the **password** statement at the **[edit system login]** hierarchy level:

```
[edit system login]
password {
   change-type (set-transitions | character-set);
   format (md5 | sha1);
   maximum-length length;
   minimum-changes number;
   minimum-length length;
   minimum-lower-cases number;
   minimum-numerics number;
   minimum-punctuations number;
   minimum-upper-cases number;
}
```

NOTE: These statements apply to plain-text passwords only, not encrypted passwords.

Related Documentation

- Special Requirements for Junos OS Plain-Text Passwords on page 78
- Configuring the Root Password on page 76
- Example: Changing the Requirements for Junos OS Plain-Text Passwords on page 81

Example: Changing the Requirements for Junos OS Plain-Text Passwords

This example shows how to set various maximum and minimum requirements for plain-text passwords to increase password strength.

Requirements

This example requires a device running Junos 12.2 or greater. The **minimum-length** and **maximum-length** password requirements statements are available in earlier releases, however, you must have Junos OS Release 12.2 or greater to configure **minimum-lower-cases**, **minimum-numerics**, **minimum-punctuations**, or **minimum-upper-cases**.

Overview

You can use a variety of requirements to strengthen plain-text passwords for greater security. Junos OS provides a number of possible configurations at the **[edit system login password]** hierarchy level that allow you to require users to create plain-text passwords that conform to a particular set of requirements that may include such things as length, number of changes, type of characters, numbers, or letter case.

Configuration

CLI Quick Configuration

To quickly configure this example, copy the following commands, paste them into a text file, remove any line breaks, change any details necessary to match your network configuration, and then copy and paste the commands into the CLI at the **[edit]** hierarchy level.

```
set system login password minimum-length 12

set system login password maximum-length 22

set system login password minimum-numerics 1

set system login password minimum-upper-cases 1

set system login password minimum-lower-cases 1

set system login password minimum-punctuations 1
```

Configuring Requirements for Plain-Text Passwords

Step-by-Step Procedure

This example configures password requirements that require the user to creat a password that has a minimum length of 12 characters, a maximum length of 22 characters, and that includes at least one lower-case letter, at least one upper-case letter, at least one punctuation character, and at least one numeric character.

1. Navigate to configuration mode in the [system login password] hierarchy level.

   ```
   user@host> edit
   [edit]
   user@host# edit system login password
   ```

2. Set a minimum length requirement of 12 characters and a maximum length requirement of 22 characters for user passwords.

   ```
   [edit system login password]
   user@host# set minimum-length 12
   [edit system login password]
   ```

```
user@host# set maximum-length 22
```

3. Require users to set a password that has at least one lower-case letter and at least one upper-case letter.

```
[edit system login password]
user@host# set minimum-lower-cases 1
[edit system login password]
user@host# set minimum-upper-cases 1
```

4. Require users to set a password that has at least one punctuation-class character and at least one number.

```
[edit system login password]
user@host# set minimum-punctuations 1
[edit system login password]
user@host# set minimum-numerics 1
```

Results

From configuration mode, confirm your configuration by entering the show command at the edit system login password hierarchy level. if the output does not display the intended configuration, repeat the instructions in this example to correct the configuration.

```
[edit system login password]
user@host# show
minimum-length 12;
maximum-length 22;
minimum-numerics 1;
minimum-upper-cases 1;
minimum-lower-cases 1;
```

Related Documentation

- Special Requirements for Junos OS Plain-Text Passwords on page 78
- password (Login)

Configuring the Junos OS to Set Console and Auxiliary Port Properties

Each router or switch has a console port and an auxiliary port for connecting terminals to the router or switch. The console port is enabled by default, and its speed is 9600 baud. The auxiliary port is disabled by default.

To configure the properties for the console and auxiliary ports, include the **ports** statement at the **[edit system]** hierarchy level:

```
[edit system]
ports {
   auxiliary {
      disable;
      insecure;
      type terminal-type;
   }
   console {
      disable;
```

```
        insecure;
        log-out-on-disconnect;
        type terminal-type;
    }
}
```

By default, the terminal type is unknown, and the terminal speed is 9600 baud for both the console and auxiliary ports. To change the terminal type, include the **type** statement, specifying a ***terminal-type*** of **ansi**, **vt100**, **small-xterm**, or **xterm**. The first three terminal types set a screen size of 80 columns by 24 lines. The last type, **xterm**, sets the size to 80 columns by 65 rows.

By default, the console session is not logged out when the data carrier is lost on the console modem control lines. To log out the session when the data carrier on the console port is lost, include the **log-out-on-disconnect** statement. You can use the **show system users** command to verify the console session is logged out.

NOTE: **The log-out-on-disconnect statement is not operational on MX80 routers. On MX80 routers you must manually log out from the console with the request system logout u0 command.**

By default, terminal connections to the console and auxiliary ports are secure. When you configure the console as insecure, root logins are not allowed to establish terminal connections. In addition, superusers and anyone with a user identifier (UID) of 0 are not allowed to establish terminal connections in multiuser mode when you configure the console as insecure. To disable root login connections to the console and auxiliary ports, include the **insecure** statement. This option can be used to prevent a user from attempting password recovery by booting into single-user mode, if the user does not know the root password.

To disable console login, include the **disable** statement. By default, console login is enabled.

For Common Criteria compliance, the console port must be disabled.

Related Documentation

- Methods for Configuring Junos OS on page 36
- console
- ports on page 144

Configuring Multiple Routing Engines to Synchronize Committed Configurations Automatically

If your router or switch has multiple Routing Engines, you can manually direct one Routing Engine to synchronize its configuration with the others by issuing the **commit synchronize** command.

To make the Routing Engines synchronize automatically whenever a configuration is committed, include the **commit synchronize** statement at the **[edit system]** hierarchy level:

```
[edit system]
commit synchronize;
```

The Routing Engine on which you execute the **commit** command (requesting Routing Engine) copies and loads its candidate configuration to the other (responding) Routing Engines. All Routing Engines then perform a syntax check on the candidate configuration file being committed. If no errors are found, the configuration is activated and becomes the current operational configuration on all Routing Engines.

For the commit synchronization process, the master Routing Engine commits the configuration and sends a copy of the configuration to the backup Routing Engine. Then the backup Routing Engine loads and commits the configuration. So, the commit synchronization between the master and backup Routing Engines takes place one Routing Engine at a time. If the configuration has a large text size or many apply-groups, commit times can be longer than desired.

You can use the **commit fast-synchronize** statement to have the synchronization between the master and backup Routing Engines occur simultaneously instead of sequentially. This can reduce the time needed for synchronization because the commits on the master and backup Routing Engines occur in parallel.

Include the **fast-synchronize** statement at the **[edit system]** hierarchy level to have synchronize occur simultaneously between the master and the backup Routing Engines:

```
[edit system]
commit fast-synchronize
```

NOTE: **If commit fails on either Routing Engine, the commit process is rolled back on the other Routing Engine as well. This ensures that both Routing Engines have the same configuration.**

Related Documentation

- Junos OS Commit Model for Router or Switch Configuration on page 9

Compressing the Current Configuration File

By default, the current operational configuration file is compressed, and is stored in the file **juniper.conf.gz**, in the **/config** file system, along with the last three committed versions of the configuration. If you have large networks, the current configuration file might exceed the available space in the **/config** file system. Compressing the current configuration file enables the file to fit in the file system, typically reducing the size of the file by 90 percent. You might want to compress your current operation configuration files when they reach 3 megabytes (MB) in size.

When you compress the current configuration file, the names of the configuration files change. To determine the size of the files in the **/config** file system, issue the **file list /config detail** command.

NOTE: We recommend that you compress the configuration files (this is the default) to minimize the amount of disk space that they require.

- If you want to compress the current configuration file, include the **compress-configuration-files** statement at the **[edit system]** hierarchy level:

  ```
  [edit system]
  compress-configuration-files;
  ```

  Commit the current configuration file to include the **compression-configuration-files** statement. Commit the configuration again to compress the current configuration file:

  ```
  [edit system]
  user@host# set compress-configuration-files
  user@host# commit
  commit complete
  user@host# commit
  commit complete
  ```

- If you do not want to compress the current operational configuration file, include the **no-compress-configuration-files** statement at the **[edit system]** hierarchy level:

  ```
  [edit system]
  no-compression-configuration-files;
  ```

Commit the current configuration file to include the **no-compress-configuration-files** statement. Commit the configuration again to uncompress the current configuration file:

```
[edit system]
user@host# commit
commit complete
user@host# commit
commit complete
```

Related Documentation

- Junos OS Commit Model for Router or Switch Configuration on page 9
- compress-configuration-files

Configuring the Junos OS to Make the Router or Interface Act as a DHCP or BOOTP Relay Agent

To configure a router or interface to act as a bootstrap protocol (DHCP or BOOTP) relay agent, you include statements at the **[edit forwarding-options helpers]** hierarchy level.

For J Series Services Routers, you can configure a router or interface as a DHCP server by including statements at the **[edit system services]** hierarchy level.

NOTE: You cannot configure a router or interface as a DHCP server and a BOOTP relay agent at the same time.

Disabling Junos OS Processes

CAUTION: Never disable any of the software processes unless instructed to do so by a Customer Support engineer.

To disable a software process, specify the appropriate option in the **processes** statement at the **[edit system]** hierarchy level:

```
[edit system]
processes {
  process-name (enable | disable);
}
```

NOTE: The *process-name* variable is one of the valid process names. You can obtain a complete list of process names by using the CLI command completion feature. For additional information, see processes.

Related Documentation

- Configuring Failover to Backup Media if a Junos OS Process Fails on page 88
- Configuring Password Authentication for the Diagnostics Port
- Viewing Core Files from Junos OS Processes on page 87

Viewing Core Files from Junos OS Processes

When an internal Junos process generates a core file, the output found at **/var/crash/** and **/var/tmp/** can now be viewed. This provides a quick method of finding core issues across large networks.

Use the CLI command **show system core-dumps** to view core files.

```
root@host> show system core-dumps
-rw-------  1 root  wheel  268369920 Jun 18 17:59 /var/crash/vmcore.0
-rw-rw----  1 root  field    3371008 Jun 18 17:53 /var/tmp/rpd.core.0
-rw-r--r--  1 root  wheel   27775914 Jun 18 17:59 /var/crash/kernel.0
```

Related Documentation

- Saving Core Files from Junos OS Processes on page 88
- Saving Core Files Generated by Junos OS Processes

Saving Core Files from Junos OS Processes

By default, when an internal Junos process generates a core file, the file and associated context information are saved for debugging purposes in a compressed tar file named **/var/tmp/*process-name*.core.*core-number*.tgz**. The contextual information includes the configuration and system log message files.

To disable the saving of core files and associated context information, include the **no-saved-core-context** statement at the **[edit system]** hierarchy level:

```
[edit system]
no-saved-core-context;
```

To save the core files only, include the **saved-core-files** statement at the **[edit system]** hierarchy level and specify the number of files to save:

```
[edit system]
saved-core-files number;
```

number is the number of core files to save and can be a value from 1 through 10.

To save the core files along with the contextual information, include the **saved-core-context** statement at the **[edit system]** hierarchy level:

```
[edit system]
saved-core-context;
```

Related Documentation

- Viewing Core Files from Junos OS Processes on page 87

Configuring Failover to Backup Media if a Junos OS Process Fails

For routers or switches with redundant Routing Engines, you can configure the router or switch to switch to backup media that contains a version of the system if a software process fails repeatedly. You can configure the router or switch to fail over either to backup media or to the other Routing Engine. To configure automatic switchover to backup media if a software process fails, include the **failover** statement at the **[edit system processes *process-name*]** hierarchy level:

```
[edit system processes]
process-name failover (alternate-media | other-routing-engine);
```

process-name is one of the valid process names. If this statement is configured for a process, and that process fails four times within 30 seconds, the router reboots from either the alternative media or the other Routing Engine.

Related Documentation

- Disabling Junos OS Processes on page 87
- Saving Core Files from Junos OS Processes on page 88
- **processes on page 145**

Configuring the Junos OS to Display a System Login Message

By default, no login message is displayed. To configure a system login message, include the **message** statement at the **[edit system login]** hierarchy level:

```
[edit system login]
message text;
```

If the message text contains any spaces, enclose it in quotation marks.

You can format the message using the following special characters:

- \n—New line
- \t—Horizontal tab
- \'—Single quotation mark
- \"—Double quotation mark
- \\—Backslash

The following is a sample login message configuration:

```
[edit]
system {
    login {
        message "\n\n\n\tUNAUTHORIZED USE OF THIS SYSTEM\n
                 \tIS STRICTLY PROHIBITED!\n\n\tPlease contact
                 \'company-noc@company.com\' to gain\authorization
                 to this equipment if you need access.\n\n\n";
        }
    }
}
```

The preceding login message configuration example produces a login message similar to the following:

```
server% telnet router1
Trying 1.1.1.1...
Connected to router1.
Escape character is '^]'.



          UNAUTHORIZED USE OF THIS SYSTEM
          IS STRICTLY PROHIBITED!

          Please contact 'company-noc@company.com' to gain
          authorization to this equipment if you need access.



router1 (ttyp0)

login:
```

A system login message appears before the user logs in. A system login announcement appears after the user logs in. See "Configuring the Junos OS to Display a System Login Announcement" on page 90.

Related Documentation

- Configuring the Junos OS to Display a System Login Announcement on page 90
- Defining Junos OS Login Classes

Configuring the Junos OS to Display a System Login Announcement

By default, no login announcement is displayed. To configure a system login announcement, include the **announcement** statement at the **[edit system login]** hierarchy level:

```
[edit system login]
announcement text;
```

If the announcement text contains any spaces, enclose it in quotation marks.

A system login announcement appears after the user logs in. A system login message appears before the user logs in. See "Configuring the Junos OS to Display a System Login Message" on page 89.

TIP: You can use the same special characters described in "Configuring the Junos OS to Display a System Login Message" on page 89 to format your system login announcement.

Related Documentation

- Configuring the Junos OS to Display a System Login Message on page 89

Upgrading to 64-bit Junos OS

Just like any other operating system, the 64-bit version of Junos OS can address more memory than the 32-bit version of the operating system. In order to support larger Routing Engine memory sizes, an upgrade from the 32-bit to the 64-bit Junos OS running on the Routing Engine hardware is necessary. The upgrade path is relatively straightforward and another form of Routing Engine hardware and software upgrade. However, there are three different and distinct Routing Engine configurations that must be taken into account when upgrading to the 64-bit Junos OS. This topic covers all three.

The In Service Software Upgrade (ISSU) procedure is not supported while upgrading from the 32-bit version of Junos OS to the 64-bit version of Junos OS. The upgrade process involves some downtime, so traffic will be affected.

NOTE:

The 64-bit Junos OS is supported on the following Routing Engines only:

- RE-DUO-C1800-8G
- RE-DUO-C2600-16G
- RE-A-1800x2-16G
- RE-S-1800x4-16G
- RE-DUO-C1800-16G
- RE-JCS1200-1x2330

For a list of which routers support each Routing Engine, see http://www.juniper.net/techpubs/en_US/release-independent/junos/topics/reference/general/routing-engine-m-mx-t-series-support-by-chassis.html.

Before you begin, you must have:

- A properly configured and functional router
- One or two Routing Engines installed that support the 64-bit Junos OS
- Decided to allow single Routing Engines systems to use either slot 0 or slot 1 as master or not (this decision will determine which upgrade path to follow for single Routing Engine systems)

When you upgrade a Routing Engine to the 64-bit Junos OS, you can support larger Routing Engine memory sizes. However, the exact procedure depends on whether there are one or two Routing Engines installed. For systems with a single Routing Engine, the procedure varies based on whether the master Routing Engine must always be in slot 0 or not.

To upgrade a system with two Routing Engines, refer to Figure 3 on page 92 and perform the following steps:

Figure 3: Upgrading to the 64-bit Junos OS with Dual Routing Engines

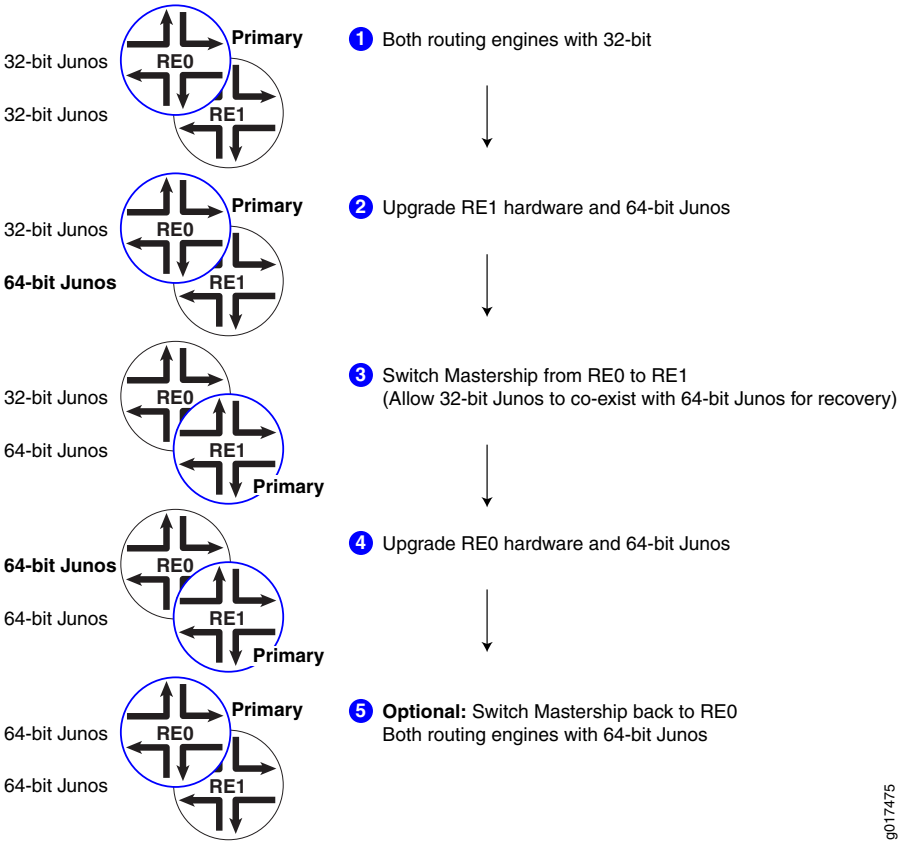

1. In the initial state, both Routing Engines are running the 32-bit Junos OS, and slot 0 has the master Routing Engine.
2. Upgrade the slot 1 Routing Engine hardware and install the 64-bit Junos OS.

   For instructions on replacing a Routing Engine, see the hardware guide for your router.
3. Switch the master Routing Engine from slot 0 to slot 1 (allow the 32-bit Junos OS to co-exist with the 64-bit Junos OS).
4. Upgrade the slot 0 routing engine hardware and install the 64-bit Junos OS.
5. Both Routing Engines now run the 64-bit Junos OS. Optionally, you can switch the master Routing Engine back to slot 0.

NOTE: Mixing the 32-bit Junos OS with the 64-bit Junos OS is only supported temporarily during the upgrade process. Mixing the two operating systems is not supported for normal operations.

Figure 4: Upgrading to the 64-bit Junos OS with a Single Routing Engine (Master in Either Slot)

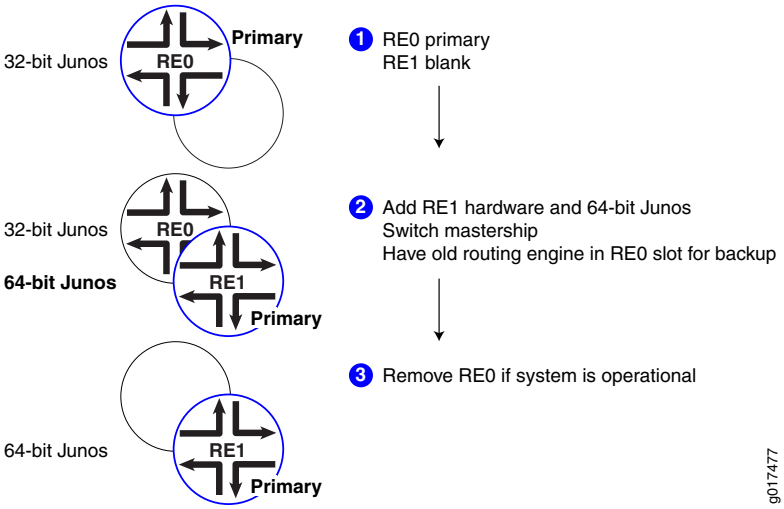

To upgrade a system with a single Routing Engine, where the master Routing Engine can be in either slot 0 or slot 1, refer to Figure 3 on page 92and perform the following steps:

1. In the initial state, the slot 0 Routing Engine is running the 32-bit Junos OS and slot 1 is blank.
2. Install the upgraded Routing Engine hardware in slot 1 and install the 64-bit Junos OS.

   For instructions on installing a Routing Engine, see the hardware guide for your router.
3. When the 64-bit Junos OS is configured properly, remove the slot 0 Routing Engine running the 32-bit Junos OS.

To upgrade a system with a single Routing Engine, where the master Routing Engine must be in slot 0, refer to Figure 5 on page 94 and perform the following steps:

Figure 5: Upgrading to the 64-bit Junos OS with a Single Routing Engine (Master Must Be in Slot 0)

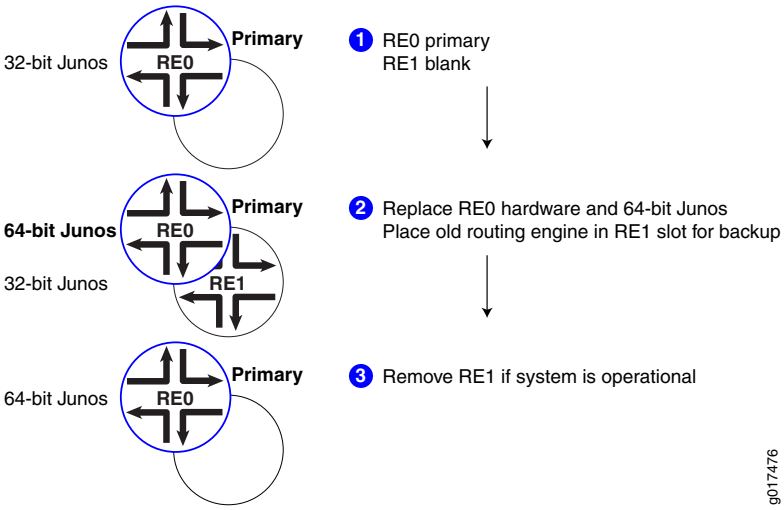

1. In the initial state, the slot 0 Routing Engine is running the 32-bit Junos OS and slot 1 is blank.
2. Install the slot 0 Routing Engine hardware in slot 1. Install the upgraded Routing Engine hardware in slot 0 and install the 64-bit Junos OS.

   For instructions on installing a Routing Engine, see the hardware guide for your router.
3. When the 64-bit Junos OS is configured properly, remove the slot 1 routing engine running the 32-bit Junos OS.

Related Documentation

- Checklist for Reinstalling Junos OS

Disk Space Management for Junos OS Installation

A Junos OS installation or upgrade may fail if your router has a shortage of disk space. If a disk space error occurs, use one or more of the following options to complete the installation:

- Use the **request system storage cleanup** command to delete unnecessary files and increase storage space on the router.
- Specify the **unlink** option when you use the **request system software add** command to install the Junos OS:
  - On the J Series routers, the **unlink** option removes the software package at the earliest opportunity to create enough disk space for the installation to finish.
  - On the M Series, MX Series, and T Series routers, the **unlink** option removes the software package after a successful upgrade.

- Download the software packages you need from the Juniper Networks Support Web site, **http://www.juniper.net/support/**. The download program provides intelligent disk space management to enable installation.

NOTE: If you are upgrading the J Series router from a remote location, the installation program automatically checks for enough disk space for the process to finish.

Related Documentation

- Junos OS Configuration Using the CLI on page 39

CHAPTER 6

Using Configuration Groups

Creating a Junos Configuration Group

To create a configuration group, include the **groups** statement at the **[edit]** hierarchy level:

```
[edit]
groups {
  group-name {
    configuration-data;
  }
  lccn-re0 {
    configuration-data;
  }
  lccn-re1 {
    configuration-data;
  }
}
```

group-name is the name of a configuration group. You can configure more than one configuration group by specifying multiple ***group-name*** statements. However, you cannot use the prefix **junos-** in a group name because it is reserved for use by Junos OS. Similarly, the configuration group **juniper-ais** is reserved exclusively for Juniper Advanced Insight Solutions (AIS)-related configuration. For more information on the **juniper-ais** configuration group, see the Juniper Networks *Advanced Insight Solutions Guide*.

One reason for the naming restriction is a configuration group called **junos-defaults**. This preset configuration group is applied to the configuration automatically. You cannot

modify or remove the **junos-defaults** configuration group. For more information about the Junos default configuration group, see Using Junos OS Defaults Groups.

On routers that support multiple Routing Engines, you can also specify two special group names:

- **re0**—Configuration statements applied to the Routing Engine in slot 0.
- **re1**—Configuration statements applied to the Routing Engine in slot 1.

The configuration specified in group **re0** is only applied if the current Routing Engine is in slot 0; likewise, the configuration specified in group **re1** is only applied if the current Routing Engine is in slot 1. Therefore, both Routing Engines can use the same configuration file, each using only the configuration statements that apply to it. Each **re0** or **re1** group contains at a minimum the configuration for the hostname and the management interface (fxp0). If each Routing Engine uses a different management interface, the group also should contain the configuration for the backup router and static routes.

In addition, the TX Matrix router supports group names for the Routing Engines in each T640 router attached to the routing matrix. Providing special group names for all Routing Engines in the routing matrix allows you to configure the individual Routing Engines in each T640 router differently. Parameters that are not configured at the **[edit groups]** hierarchy level apply to all Routing Engines in the routing matrix.

configuration-data contains the configuration statements applied elsewhere in the configuration with the **apply-groups** statement. To have a configuration inherit the statements in a configuration group, include the **apply-groups** statement. For information about the **apply-groups** statement, see "Applying a Junos Configuration Group" on page 99.

The group names for Routing Engines on the TX Matrix router have the following formats:

- **lcc*n*-re0**—Configuration statements applied to the Routing Engine in slot 0 in a specified T640 router.
- **lcc*n*-re1**—Configuration statements applied to the Routing Engine in slot 1 in a specified T640 router.

n identifies the T640 router and can be from 0 through 3. For example, to configure Routing Engine 1 properties for **lcc3**, you include statements at the **[edit groups lcc3–re1]** hierarchy level. For information about the TX Matrix router and routing matrix, see the Junos OS System Basics Configuration Guide.

NOTE: **The management Ethernet interface used for the TX Matrix Plus router, T1600 or T4000 routers in a routing matrix, and PTX Series Packet Transport Switches, is em0. Junos OS automatically creates the router's management Ethernet interface, em0.**

Related Documentation

- Applying a Junos Configuration Group on page 99
- Using Junos OS Defaults Groups

Applying a Junos Configuration Group

To have a Junos configuration inherit the statements from a configuration group, include the **apply-groups** statement:

apply-groups [*group-names*];

If you specify more than one group name, list them in order of inheritance priority. The configuration data in the first group takes priority over the data in subsequent groups.

For routers that support multiple Routing Engines, you can specify **re0** and **re1** group names. The configuration specified in group **re0** is only applied if the current Routing Engine is in slot 0; likewise, the configuration specified in group **re1** is only applied if the current Routing Engine is in slot 1. Therefore, both Routing Engines can use the same configuration file, each using only the configuration statements that apply to it. Each **re0** or **re1** group contains at a minimum the configuration for the hostname and the management interface (**fxp0**). If each Routing Engine uses a different management interface, the group also should contain the configuration for the backup router and static routes.

NOTE: The management Ethernet interface used for the TX Matrix Plus router, T1600 or T4000 routers in a routing matrix, and PTX Series Packet Transport Switches, is em0.

You can include only one **apply-groups** statement at each specific level of the configuration hierarchy. The **apply-groups** statement at a specific hierarchy level lists the configuration groups to be added to the containing statement's list of configuration groups.

Values specified at the specific hierarchy level override values inherited from the configuration group.

Groups listed in nested **apply-groups** statements take priority over groups in outer statements. In the following example, the BGP neighbor **10.0.0.1** inherits configuration data from group **one** first, then from groups **two** and **three**. Configuration data in group **one** overrides data in any other group. Data from group **ten** is used only if a statement is not contained in any other group.

```
apply-groups [ eight nine ten ];
protocols {
   apply-groups seven;
   bgp {
      apply-groups [ five six ];
      group some-bgp-group {
```

```
            apply-groups four;
            neighbor 10.0.0.1 {
               apply-groups [ one two three ];
            }
         }
      }
   }
```

When you configure a group defined for the root level—that is, in the default logical system–you cannot successfully apply that group to a nondefault logical system under the **[edit logical-systems *logical-system-name*]** hierarchy level. Although the router accepts the commit if you apply the group, the configuration group does not take effect for the nondefault logical system. You can instead create an additional configuration group at the root level and apply it within the logical system. Alternatively, you can modify the original group so that it includes configuration for both the default and nondefault logical system hierarchy levels.

Related Documentation

- Example: Configuring and Applying Junos Configuration Groups on page 104
- Disabling Inheritance of a Junos OS Configuration Group on page 107
- Creating a Junos Configuration Group on page 97
- Using Wildcards with Configuration Groups on page 109
- Example: Configuring Sets of Statements with Configuration Groups on page 100

Example: Configuring Sets of Statements with Configuration Groups

When sets of statements exist in configuration groups, all values are inherited. For example:

```
[edit]
user@host# show
groups {
   basic {
      snmp {
         interface so-1/1/1.0;
      }
   }
}
apply-groups basic;
snmp {
   interface so-0/0/0.0;
}
[edit]
user@host# show | display inheritance
snmp {
   ##
   ## 'so-1/1/1.0' was inherited from group 'basic'
   ##
   interface [ so-0/0/0.0 so-1/1/1.0 ];
}
```

For sets that are not displayed within brackets, all values are also inherited. For example:

```
[edit]
user@host# show
groups {
   worldwide {
      system {
         name-server {
            10.0.0.100;
            10.0.0.200;
         }
      }
   }
}
apply-groups worldwide;
system {
   name-server {
      10.0.0.1;
      10.0.0.2;
   }
}
[edit]
user@host# show | display inheritance
system {
   name-server {
      ##
      ## '10.0.0.100' was inherited from group 'worldwide'
      ##
      10.0.0.100;
      ##
      ## '10.0.0.200' was inherited from group 'worldwide'
      ##
      10.0.0.200;
      10.0.0.1;
      10.0.0.2;
   }
}
```

Related Documentation

- Understanding the Junos Configuration Groups on page 12
- Creating a Junos Configuration Group on page 97
- Applying a Junos Configuration Group on page 99

Example: Configuring Conditions for Applying Configuration Groups

This example shows how to configure conditions under which a specified configuration group is to be applied.

Requirements

No special configuration beyond device initialization is required before you configure this example.

Overview

You can configure your group configuration data at the **[edit groups *group-name*]** hierarchy level, then use the **when** statement to have the group applied based on conditions including: type of **chassis**, **model**, or **routing-engine**, virtual chassis **member**, cluster **node**, and start and optional end **time** of day or date.

If you specify multiple conditions in a single configuration group, all conditions must be met before the configuration group is applied.

You can specify the start time or the time duration for the configuration group to be applied. If only the start time is specified, the configuration group is applied at the specified time and it remains in effect until the time is changed. If the end time is specified, then on each day, the applied configuration group is started and stopped at the specified times.

This example sets conditions in a configuration group, **test1**, such that this group is applied only when all of the following conditions are met: the router is a model MX240 router with chassis type LCC0, with a Routing Engine operating as RE0, is member0 of the virtual chassis on node0, and the configuration group will only be in effect from 9:00 a.m. until 5:00 p.m. each day. The configuration data has not yet been added to the **test1** group in this example.

Configuration

CLI Quick Configuration

To quickly configure this example, copy the following commands, paste them into a text file, remove any line breaks, change any details necessary to match your network configuration, and then copy and paste the commands into the CLI at the **[edit]** hierarchy level.

```
set groups test1 when model mx240
set groups test1 when chassis lcc0
set groups test1 when routing-engine re0
set groups test1 when member member0
set groups test1 when node node0
set groups test1 when time 9 to 5
```

Step-by-Step Procedure

The following example requires you to navigate various levels in the configuration hierarchy. For information about navigating the CLI, see Using the CLI Editor in Configuration Mode in the CLI User Guide.

To configure conditions for configuration group **test1**:

1. Set the condition that identifies the model MX240 router.

```
[edit groups test1 when]
user@host# set model mx240
```

2. Set the condition that identifies the chassis type as LCC0.

```
[edit groups test1 when]
user@host# set chassis lcc0
```

3. Set the condition that identifies the Routing Engine operating as **RE0**.

```
[edit groups test1 when]
user@host# set routing-engine re0
```

4. Set the condition that identifies the virtual chassis **member0**.

```
[edit groups test1 when]
user@host# set member member0
```

5. Set the condition that identifies the cluster **node0**.

```
[edit groups test1 when]
user@host# set node node0
```

6. Set the condition that applies the group only between the hours of 9:00 a.m. and 5:00 p.m. daily.

```
[edit groups test1 when]
user@host# set time 9 to 5
```

NOTE: The syntax for specifying the time is: **time** *<start-time>* **[to** *<end-time>***]** using the time format yyyy-mm-dd.hh:mm, hh:mm, or hh.

7. Commit the configuration.

Results From configuration mode, confirm your configuration by entering the **show groups** command. If the output does not display the intended configuration, repeat the instructions in this example to correct the configuration.

```
user@host# show groups test1
when {
   time 9 to 5;
   chassis lcc0;
   model mx240;
   routing-engine re0;
   member member0;
   node node0;
}
```

Verification

Confirm that the configuration is working properly.

- Checking Group Inheritance with Conditional Data on page 103

Checking Group Inheritance with Conditional Data

Purpose Verify that conditional data from a configuration group is inherited when applied.

Action The **show | display inheritance** operational command can be issued with the **when** data to display the conditional inheritance. Using this example, you could issue one of these commands to determine that the conditional data was inherited:

```
user@host> show | display inheritance when model mx240
user@host> show | display inheritance when chassis lcc0
user@host> show | display inheritance when routing-engine re0
user@host> show | display inheritance when member member0
user@host> show | display inheritance when node node0
user@host> show | display inheritance when time 9 to 5
```

Related Documentation

- Understanding the Junos Configuration Groups on page 12
- Creating a Junos Configuration Group on page 97
- Applying a Junos Configuration Group on page 99
- Using Conditions to Apply Configuration Groups Overview on page 14

Example: Configuring and Applying Junos Configuration Groups

In this example, the SNMP configuration is divided between the group **basic** and the normal configuration hierarchy.

There are a number of advantages to placing the system-specific configuration (SNMP contact) into a configuration group and thus separating it from the normal configuration hierarchy—the user can replace (using the **load replace** command) either section without discarding data from the other.

In addition, setting a contact for a specific box is now possible because the group data would be hidden by the router-specific data.

```
[edit]
groups {
   basic { # User-defined group name
      snmp { # This group contains some SNMP data
         contact "My Engineering Group";
         community BasicAccess {
            authorization read-only;
         }
      }
   }
}
apply-groups basic; # Enable inheritance from group "basic"
snmp { # Some normal (non-group) configuration
   location "West of Nowhere";
}
```

This configuration is equivalent to the following:

```
[edit]
snmp {
   location "West of Nowhere";
   contact "My Engineering Group";
```



```
    community BasicAccess {
      authorization read-only;
    }
  }
```

For information about how to disable inheritance of a configuration group, see "Disabling Inheritance of a Junos OS Configuration Group" on page 107.

Related Documentation

- Example: Creating and Applying Configuration Groups on a TX Matrix Router
- Example: Configuring Interfaces Using Junos OS Configuration Groups on page 105
- Example: Configuring Peer Entities
- Example: Referencing the Preset Statement From the Junos defaults Group
- Example: Viewing Default Statements That Have Been Applied to the Configuration
- Example: Configuring Sets of Statements with Configuration Groups on page 100
- Example: Configuring a Consistent IP Address for the Management Interface
- Creating a Junos Configuration Group on page 97

Example: Configuring Interfaces Using Junos OS Configuration Groups

You can use configuration groups to separate the common interface media parameters from the interface-specific addressing information. The following example places configuration data for ATM interfaces into a group called **atm-options**:

```
[edit]
user@host# show
groups {
  atm-options {
    interfaces {
      <at-*> {
        atm-options {
          vpi 0 maximum-vcs 1024;
        }
        unit <*> {
          encapsulation atm-snap;
          point-to-point;
          family iso;
        }
      }
    }
  }
}
apply-groups atm-options;
interfaces {
  at-0/0/0 {
    unit 100 {
      vci 0.100;
      family inet {
        address 10.0.0.100/30;
      }
```

```
        }
        unit 200 {
            vci 0.200;
            family inet {
                address 10.0.0.200/30;
            }
        }
    }
}
[edit]
user@host# show | display inheritance
interfaces {
    at-0/0/0 {
        ##
        ## "atm-options" was inherited from group "atm-options"
        ##
        atm-options {
            ##
            ## "1024" was inherited from group "atm-options"
            ##
            vpi 0 maximum-vcs 1024;
        }
        unit 100 {
            ##
            ## "atm-snap" was inherited from group "atm-options"
            ##
            encapsulation atm-snap;
            ##
            ## "point-to-point" was inherited from group "atm-options"
            ##
            point-to-point;
            vci 0.100;
            family inet {
                address 10.0.0.100/30;
            }
            ##
            ## "iso" was inherited from group "atm-options"
            ##
            family iso;
        }
        unit 200 {
            ##
            ## "atm-snap" was inherited from group "atm-options"
            ##
            encapsulation atm-snap;
            ##
            ## "point-to-point" was inherited from group "atm-options"
            ##
            point-to-point;
            vci 0.200;
            family inet {
                address 10.0.0.200/30;
            }
            ##
            ## "iso" was inherited from group "atm-options"
            ##
```

```
            family iso;
        }
    }
}
[edit]
user@host# show | display inheritance | except ##
interfaces {
    at-0/0/0 {
        atm-options {
            vpi 0 maximum-vcs 1024;
        }
        unit 100 {
            encapsulation atm-snap;
            point-to-point;
            vci 0.100;
            family inet {
                address 10.0.0.100/30;
            }
            family iso;
        }
        unit 200 {
            encapsulation atm-snap;
            point-to-point;
            vci 0.200;
            family inet {
                address 10.0.0.200/30;
            }
            family iso;
        }
    }
}
```

Related Documentation

- Understanding the Junos Configuration Groups on page 12
- Creating a Junos Configuration Group on page 97
- Interface Naming Conventions Used in the Junos OS Operational Commands
- Example: Configuring a Consistent IP Address for the Management Interface

Disabling Inheritance of a Junos OS Configuration Group

To disable inheritance of a configuration group at any level except the top level of the hierarchy, include the **apply-groups-except** statement:

```
apply-groups-except [ group-names ];
```

This statement is useful when you use the **apply-group** statement at a specific hierarchy level but also want to override the values inherited from the configuration group for a specific parameter.

Example: Disabling Inheritance on Interface so-1/1/0

In the following example, the **apply-groups** statement is applied globally at the interfaces level. The **apply-groups-except** statement is also applied at interface **so-1/1/0** so that it uses the default values for the **hold-time** and **link-mode** statements.

```
[edit]
```

```
groups { # "groups" is a top-level statement
   global { # User-defined group name
      interfaces {
         <*> {
            hold-time down 640;
            link-mode full-duplex;
         }
      }
   }
}
apply-groups global;
interfaces {
   so-1/1/0 {
      apply-groups-except global;  # Disables inheritance from group "global"
      # so-1/1/0 uses default value for “hold-time”
      # and "link-mode"
   }
}
```

For information about applying a configuration group, see “Applying a Junos Configuration Group” on page 99.

Configuration groups can add some confusion regarding the actual values used by the router, because configuration data can be inherited from configuration groups. To view the actual values used by the router, use the **display inheritance** command after the pipe (|) in a **show** command. This command displays the inherited statements at the level at which they are inherited and the group from which they have been inherited.

```
[edit]
user@host# show | display inheritance
snmp {
   location "West of Nowhere";
   ##
   ## 'My Engineering Group' was inherited from group 'basic'
   ##
   contact "My Engineering Group";
   ##
   ## 'BasicAccess' was inherited from group 'basic'
   ##
   community BasicAccess {
      ##
      ## 'read-only' was inherited from group 'basic'
      ##
      authorization read-only;
   }
}
```

To display the expanded configuration (the configuration, including the inherited statements) without the ## lines, use the **except** command after the pipe in a **show** command:

```
[edit]
user@host# show | display inheritance | except ##
snmp {
   location "West of Nowhere";
```

```
    contact "My Engineering Group";
    community BasicAccess {
      authorization read-only;
    }
  }
```

NOTE: Using the **display inheritance | except ##** option removes all the lines with **##**. Therefore, you might also not be able to view information about passwords and other important data where **##** is used. To view the complete configuration details with all the information without just the comments marked with **##**, use the **no-comments** option with the **display inheritance** command:

```
[edit]
user@host# show | display inheritance no-comments
snmp {
  location "West of Nowhere";
  contact "My Engineering Group";
  community BasicAccess {
    authorization read-only;
  }
}
```

Related Documentation

- Applying a Junos Configuration Group on page 99
- Understanding the Junos Configuration Groups on page 12

Using Wildcards with Configuration Groups

You can use wildcards to identify names and allow one statement to provide data for a variety of statements. For example, grouping the configuration of the **sonet-options** statement over all SONET/SDH interfaces or the dead interval for OSPF over all Asynchronous Transfer Mode (ATM) interfaces simplifies configuration files and eases their maintenance.

Using wildcards in normal configuration data is done in a style that is consistent with that used with traditional UNIX shell wildcards. In this style, you can use the following metacharacters:

- Asterisk (*****)—Matches any string of characters.
- Question mark (**?**)—Matches any single character.
- Open bracket (**[**)—Introduces a character class.
- Close bracket (**]**)—Indicates the end of a character class. If the close bracket is missing, the open bracket matches a **[** rather than introduce a character class.
- A character class matches any of the characters between the square brackets. Within a configuration group, an interface name that includes a character class must be enclosed in quotation marks.

- Hyphen (**-**)—Specifies a range of characters.
- Exclamation point (**!**)—The character class can be complemented by making an exclamation point the first character of the character class. To include a close bracket (**]**) in a character class, make it the first character listed (after the **!**, if any). To include a minus sign, make it the first or last character listed.

Wildcarding in configuration groups follows the same rules, but any term using a wildcard pattern must be enclosed in angle brackets <*pattern*> to differentiate it from other wildcarding in the configuration file.

```
[edit]
groups {
   sonet-default {
      interfaces {
         <so-*> {
            sonet-options {
               payload-scrambler;
               rfc-2615;
            }
         }
      }
   }
}
```

Wildcard expressions match (and provide configuration data for) existing statements in the configuration that match their expression only. In the previous example, the expression **<so-*>** passes its **sonet-options** statement to any interface that matches the expression **so-***.

The following example shows how to specify a range of interfaces:

```
[edit]
groups {
   gigabit-ethernet-interfaces {
      interfaces {
         "<ge-1/2/[5-8]>" {
            description "These interfaces reserved for Customer ABC";
         }
      }
   }
}
```

Angle brackets allow you to pass normal wildcarding through without modification. In any matching within the configuration, whether it is done with or without wildcards, the first item encountered in the configuration that matches is used. In the following example, data from the wildcarded BGP groups is inherited in the order in which the groups are listed. The preference value from **<*a*>** overrides the preference in **<*b*>**, just as the **p** value from **<*c*>** overrides the one from **<*d*>**. Data values from any of these groups override the data values from **abcd**.

```
[edit]
user@host# show
groups {
   one {
```



```
        protocols {
          bgp {
            group <*a*> {
              preference 1;
            }
            group <*b*> {
              preference 2;
            }
            group <*c*> {
              out-delay 3;
            }
            group <*d*> {
              out-delay 4;
            }
            group abcd {
              preference 10;
              hold-time 10;
              out-delay 10;
            }
          }
        }
      }
    }
    protocols {
      bgp {
        group abcd {
          apply-groups one;
        }
      }
    }
    [edit]
    user@host# show | display inheritance
    protocols {
      bgp {
        group abcd {
          ##
          ## '1' was inherited from group 'one'
          ##
          preference 1;
          ##
          ## '10' was inherited from group 'one'
          ##
          hold-time 10;
          ##
          ## '3' was inherited from group 'one'
          ##
          out-delay 3;
        }
      }
    }
```

Related Documentation

- Selecting Wildcard Names
- Applying a Junos Configuration Group on page 99
- Creating a Junos Configuration Group on page 97

- Understanding the Junos Configuration Groups on page 12

CHAPTER 7

Configuration Statements

System Management Configuration Statements

This topic lists all the configuration statements that you can include at the **[edit system]** hierarchy level to configure system management features:

```
system {
  accounting {
    events [ login change-log interactive-commands ];
    destination {
      radius {
        server {
          server-address {
            accounting-port port-number;
            retry number;
            secret password;
            source-address address;
            timeout seconds;
          }
        }
      }
      tacplus {
        server {
          server-address {
            port port-number;
            secret password;
            single-connection;
            timeout seconds;
          }
        }
      }
    }
  }
  archival {
    configuration {
      archive-sites {
        ftp://<username>:<password>@<host>:<port>/<url-path>;
        ftp://<username>:<password>@<host>:<port>/<url-path>;
      }
      transfer-interval interval;
```

```
    transfer-on-commit;
  }
}
allow-v4mapped-packets;
arp {
  aging-timer minutes;
  gratuitous-arp-delay;
  gratuitous-arp-on-ifup;
  interfaces;
  passive-learning;
  purging;
}
authentication-order [ authentication-methods ];
backup-router address <destination destination-address>;
commit synchronize;
(compress-configuration-files | no-compress-configuration-files);
default-address-selection;
dump-device (compact-flash | remove-compact | usb);
diag-port-authentication (encrypted-password "password" | plain-text-password);
dynamic-profile-options {
  versioning;
}
domain-name domain-name;
domain-search [ domain-list ];
host-name hostname;
inet6-backup-router address <destination destination-address>;
internet-options {
  tcp-mss mss-value;
  (gre-path-mtu-discovery | no-gre-path-mtu-discovery);
  icmpv4-rate-limit bucket-size bucket-size packet-rate packet-rate;
  icmpv6-rate-limit bucket-size bucket-size packet-rate packet-rate;
  (ipip-path-mtu-discovery | no-ipip-path-mtu-discovery);
  (ipv6-path-mtu-discovery | no-ipv6-path-mtu-discovery);
  ipv6-path-mtu-discovery-timeout;
  no-tcp-rfc1323-paws;
  no-tcp-rfc1323;
  (path-mtu-discovery | no-path-mtu-discovery);
  source-port upper-limit <upper-limit>;
  (source-quench | no-source-quench);
  tcp-drop-synfin-set;
}
location {
  altitude feet;
  building name;
  country-code code;
  floor number;
  hcoord horizontal-coordinate;
  lata service-area;
  latitude degrees;
  longitude degrees;
  npa-nxx number;
  postal-code postal-code;
  rack number;
  vcoord vertical-coordinate;
}
login {
```

```
    announcement text;
    class class-name {
        access-end;
        access-start;
        allow-commands "regular-expression";
        ( allow-configuration | allow-configuration-regexps) "regular expression 1" "regular
            expression 2";
        allowed-days;
        deny-commands "regular-expression";
        ( deny-configuration | deny-configuration-regexps )  "regular expression 1" "regular
            expression 2 ";
        idle-timeout minutes;
        login-script
        login-tip;
        permissions [ permissions ];
    }
    message text;
    password {
        change-type (set-transitions | character-set);
        format (md5 | sha1 | des);
        maximum-length length;
        minimum-changes number;
        minimum-length length;
    }
    retry-options {
        backoff-threshold number;
        backoff-factor seconds;
        minimum-time seconds;
        tries-before-disconnect number;
    }
    user username {
        full-name complete-name;
        uid uid-value;
        class class-name;
        authentication {
            (encrypted-password "password" | plain-text-password);
            ssh-rsa "public-key";
            ssh-dsa "public-key";
        }
    }
}
login-tip number;
mirror-flash-on-disk;
name-server {
    address;
}
no-multicast-echo;
no-redirects;
no-ping-record-route;
no-ping-time-stamp;
ntp {
    authentication-key key-number type type value password;
    boot-server address;
    broadcast <address> <key key-number> <version value> <ttl value>;
    broadcast-client;
    multicast-client <address>;
```

```
    peer address <key key-number> <version value> <prefer>;
    source-address source-address;
    server address <key key-number> <version value> <prefer>;
    trusted-key [ key-numbers ];
  }
  ports {
    auxiliary {
      type terminal-type;
    }
    pic-console-authentication {
      encrypted-password encrypted-password;
      plain-text-password;
      console {
        insecure;
        log-out-on-disconnect;
        type terminal-type;
        disable;
      }
    }
    processes {
      process--name (enable | disable) failover (alternate-media | other-routing-engine);
      timeout seconds;
    }
  }
  radius-server server-address {
    accounting-port port-number;
    port port-number;
    retry number;
    secret password;
    source-address source-address;
    timeout seconds;
  }
  radius-options {
    password-protocol mschap-v2;
    }
    attributes {
      nas-ip-address ip-address;
  root-authentication {
    (encrypted-password "password" | plain-text-password);
    ssh-rsa "public-key";
    ssh-dsa "public-key";
  }
  (saved-core-context | no-saved-core-context);
  saved-core-files saved-core-files;
  scripts {
    commit {
      allow-transients;
      file filename {
        optional;
        refresh;
        refresh-from url;
        source url;
      }
      traceoptions {
        file <filename> <files number> <size size> <world-readable | no-world-readable>;
        flag flag;
```

```
            no-remote-trace;
        }
        op {
            file filename {
                arguments {
                    argument-name {
                        description descriptive-text;
                    }
                }
                command filename-alias;
                description descriptive-text;
                refresh;
                refresh-from url;
                source url;
            }
            refresh;
            refresh-from url;
            traceoptions {
                file <filename> <files number> <size size> <world-readable | no-world-readable>;
                flag flag;
                no-remote-trace;
            }
        }
    }
    services {
        finger {
            connection-limit limit;
            rate-limit limit;
        }
        flow-tap-dtcp {
            ssh {
                connection-limit limit;
                rate-limit limit;
            }
        }
        ftp {
            connection-limit limit;
            rate-limit limit;
        }
        service-deployment {
            servers server-address {
                port port-number;
            }
            source-address source-address;
        }
        ssh {
            root-login (allow | deny | deny-password);
            protocol-version [v1 v2];
            connection-limit limit;
            rate-limit limit;
        }
        telnet {
            connection-limit limit;
            rate-limit limit;
        }
        web-management {
```

```
        http {
            interfaces [ interface-names ];
            port port;
        }
        https {
            interfaces [ interface-names ];
            local-certificate name;
            port port;
        }
        session {
            idle-timeout [ minutes ];
            session-limit [ session-limit ];
        }
    }
    xnm-clear-text {
        connection-limit limit;
        rate-limit limit;
    }
    xnm-ssl {
        connection-limit limit;
        local-certificate name;
        rate-limit limit;
    }
}
static-host-mapping {
    hostname {
        alias [ alias ];
        inet [ address ];
        sysid system-identifier;
    }
}
syslog {
    archive <files number> <size size> <world-readable | no-world-readable>;
    console {
        facility severity;
    }
    file filename {
        facility severity;
        archive <archive-sites {ftp-url <password password>}> <files number> <size size>
            <start-time "YYYY-MM-DD.hh:mm"> <transfer-interval minutes> <world-readable |
            no-world-readable>;
        explicit-priority;
        match "regular-expression";
        structured-data {
            brief;
        }
    }
    host (hostname | other-routing-engine | scc-master) {
        facility severity;
        explicit-priority;
        facility-override facility;
        log-prefix string;
        match "regular-expression";
        source-address source-address;
        structured-data {
            brief;
```

```
        }
      }
      source-address source-address;
      time-format (year | millisecond | year millisecond);
      user (username | *) {
        facility severity;
        match "regular-expression";
      }
    }
    tacplus-options {
      service-name service-name;
      (no-cmd-attribute-value | exclude-cmd-attribute);
    }
    tacplus-server server-address {
      secret password;
      single-connection;
      source-address source-address;
      timeout seconds;
    }
    time-zone (GMThour-offset | time-zone);
    }
    tracing {
      destination-override {
      syslog host;
      }
    }
    use-imported-time-zones;
  }
```

announcement

Syntax announcement *text*;

Hierarchy Level [edit system login]

Release Information Statement introduced before Junos OS Release 7.4.
Statement introduced in Junos OS Release 9.0 for EX Series switches.

Description Configure a system login announcement. This announcement appears after a user logs in.

Options ***text***—Text of the announcement. If the text contains any spaces, enclose it in quotation marks.

Required Privilege Level system—To view this statement in the configuration.
system-control—To add this statement to the configuration

Related Documentation

- Configuring the Junos OS to Display a System Login Announcement on page 90
- message on page 139

archival

Syntax

```
archival {
  configuration {
    archive-sites {
      file://<path>/<filename>;
      ftp://username@host:<port>url-path password password;
      http://username@host:<port>url-path password password;
      pasvftp://username@host:<port>url-path password password;
      scp://username@host:<port>url-path password password;
    }
    transfer-interval interval;
    transfer-on-commit;
  }
}
```

Hierarchy Level [edit system]

Release Information

Statement introduced before Junos OS Release 7.4.
Statement introduced in Junos OS Release 9.0 for EX Series switches.
Statement introduced in Junos OS Release 11.1 for the QFX Series.

Description Configure copying of the currently active configuration to an archive site. An archive site can be a file, or an FTP or SCP location.

NOTE: The **edit system archival** hierarchy is not available on QFabric systems.

Options The remaining statements are explained separately.

NOTE: The **[edit system archival]** hierarchy is not available on QFabric systems.

Required Privilege Level

admin—To view this statement in the configuration.
admin-control—To add this statement to the configuration.

Related Documentation

- Using Junos OS to Configure a Router or Switch to Transfer Its Configuration to an Archive Site on page 73

archive-sites (Configuration File)

Syntax

```
archive-sites {
   file://<path>/<filename>;
   ftp://username@host:<port>url-path password password;
   http://username@host:<port>url-path password password;
   pasvftp://username@host:<port>url-path password password;
   scp://username@host:<port>url-path password password;
}
```

Hierarchy Level

[edit system archival configuration]

Release Information

Statement introduced before Junos OS Release 7.4.
Statement introduced in Junos OS Release 9.0 for EX Series switches.
Statement introduced in Junos OS Release 11.1 for the QFX Series.

Description

Specify where to transfer the current configuration files. When specifying a URL in a Junos OS statement using an IPv6 host address, you must enclose the entire URL in quotation marks (" ") and enclose the IPv6 host address in brackets ([ ]). For example, **"scp://*username*<:*password*>@[*ipv6-host-address*]<:*port*>/*url-path*"**

If you specify more than one archive site, the router or switch attempts to transfer the configuration files to the first archive site in the list, moving to the next only if the transfer fails.

The destination filename is saved in the following format, where *n* corresponds to the number of the compressed configuration rollback file that has been archived:

router-name_juniper.conf.*n*.gz_*YYYYMMDD_HHMMSS*.

NOTE: The time included in the destination filename is always in Coordinated Universal Time (UTC) regardless of whether the time on the router or switch is configured as UTC or the local time zone. The default time zone on the router or switch is UTC.

NOTE: The **[edit system archival]** hierarchy is not available on QFabric systems.

Options

The prefix used in the configuration statement determines the form of transfer:

file:// —transfer on a path to a named file

ftp:// —transfer using active FTP server

pasvftp:// —transfer to a device that only accepts passive FTP services

scp:// —transfer to a known host using background SCP file transfers

Required Privilege Level

system—To view this statement in the configuration.
system-control—To add this statement to the configuration.

Related Documentation

- Configuring Archive Sites for Transfer of Active Configuration Files on page 74
- Junos OS Commit Model for Router or Switch Configuration on page 9
- **configuration on page 127**
- **transfer-on-commit on page 153**

autoinstallation

Syntax

```
autoinstallation {
  configuration-servers {
    url;
  }
  interfaces {
    interface-name {
      bootp;
      rarp;
    }
  }
}
```

Hierarchy Level

[edit system]

Release Information

Statement introduced before Junos OS Release 7.4.
Statement introduced in Junos OS Release 9.1 for EX Series switches.
Statement introduced in Junos OS Release 12.2 for ACX Series Universal Access Routers.

Description

For ACX Series routers, J Series Services routers, and EX Series switches only. Download a configuration file automatically from an FTP, Hypertext Transfer Protocol (HTTP), or Trivial FTP (TFTP) server. When you power on a router or switch configured for autoinstallation, it requests an IP address from a Dynamic Host Configuration Protocol (DHCP) server. Once the router or switch has an address, it sends a request to a configuration server and downloads and installs a configuration.

Options

The remaining statements are explained separately.

Required Privilege Level

system—To view this statement in the configuration.
system-control—To add this statement to the configuration.

Related Documentation

- ACX Series Autoinstallation Overview
- Before You Begin Autoinstallation on an ACX Series Universal Access Router
- Autoinstallation Configuration of ACX Series Universal Access Routers
- USB Autoinstallation on ACX Series Routers
- Verifying Autoinstallation on ACX Series Universal Access Routers
- show system autoinstallation status
- Upgrading Software Using Automatic Software Download
- *J Series Services Router Basic LAN and WAN Access Configuration Guide*
- configuration-servers on page 128
- idle-timeout

backup-router

Syntax backup-router *address* <destination *destination-address*>;

Hierarchy Level [edit system]

Release Information Statement introduced before Junos OS Release 7.4.

Description Set a default router (running IP version 4 [IPv4]) to use while the local router (running IPv4) is booting and if the routing protocol processes fail to start. The Junos OS removes the route to this router as soon as the software starts.

Options ***address***—Address of the default router.

destination *destination-address*—(Optional) Destination address that is reachable through the backup router. You can include this option to achieve network reachability while loading, configuring, and recovering the router, but without the risk of installing a default route in the forwarding table.

Default: All hosts (default route) are reachable through the backup router.

Required Privilege Level system—To view this statement in the configuration.
system-control—To add this statement to the configuration.

Related Documentation
- Configuring a Backup Router on page 69

commit fast-synchronize

Syntax commit fast-synchronize;

Hierarchy Level [edit system]

Release Information Statement introduced in Junos OS Release 12.2.

Description Configure the commits to run in parallel on both the master and backup Routing Engines to reduce the time taken for commit synchronization. Valid only on systems with two Routing Engines.

Required Privilege Level system—To view this statement in the configuration.
system-control—To add this statement to the configuration.

Related Documentation
- Configuring Multiple Routing Engines to Synchronize Committed Configurations Automatically on page 84
- **commit synchronize on page 125**

commit synchronize

Syntax commit synchronize;

Hierarchy Level [edit system]

Release Information Statement introduced in Junos OS Release 7.4.
Statement introduced in Junos OS Release 10.4 for EX Series switches.

Description (For devices with multiple Routing Engines only) Configure the **commit** command to automatically result in a **commit synchronize** action between dual Routing Engines within the same chassis. The Routing Engine on which you execute the **commit** command (the requesting Routing Engine) copies and loads its candidate configuration to the other (the responding) Routing Engine. Each Routing Engine then performs a syntax check on the candidate configuration file being committed. If no errors are found, the configuration is activated and becomes the current operational configuration on both Routing Engines.

NOTE: **When you configure nonstop active routing (NSR), you must include the commit synchronize statement. Otherwise, the commit operation fails.**

On the TX Matrix router, synchronization only occurs between the Routing Engines within the same chassis and when synchronization is complete, the new configuration is then distributed to the Routing Engines on the T640 routers. That is, the master Routing Engine on the TX Matrix router distributes the configuration to the master Routing Engine on each T640 router. Likewise, the backup Routing Engine on the TX Matrix router distributes the configuration to the backup Routing Engine on each T640 router.

On the TX Matrix Plus router, synchronization only occurs between the Routing Engines within the switch-fabric chassis and when synchronization is complete, the new configuration is then distributed to the Routing Engines on the line-card chassis (LCC). That is, the master Routing Engine on the TX Matrix Plus router distributes the configuration to the master Routing Engine on each LCC. Likewise, the backup Routing Engine on the TX Matrix Plus router distributes the configuration to the backup Routing Engine on each LCC.

In EX Series Virtual Chassis configurations:

- On EX4200 switches in Virtual Chassis, synchronization occurs between the switch in the master role and the switch in the backup role.
- On EX8200 switches in a Virtual Chassis, synchronization occurs only between the master and backup XRE200 External Routing Engines.

Options **and-quit**—(Optional) (EX Series only) Quit configuration mode if the commit synchronization succeeds.

comment—(Optional) (EX Series only) Write a message to the commit log.

and-force—(Optional) (EX Series only) Force a commit synchronization on the other Routing Engine (ignore warnings).

Required Privilege Level
system—To view this statement in the configuration.
system-control—To add this statement to the configuration.

Related Documentation
- Synchronizing the Routing Engine Configuration
- Configuring Multiple Routing Engines to Synchronize Committed Configurations Automatically on page 84

compress-configuration-files (System)

Syntax
(compress-configuration-files | no-compress-configuration-files);

Hierarchy Level
[edit system]

Release Information
Statement introduced before Junos OS Release 7.4.

Description
Compress the current operational configuration file. By default, the current operational configuration file is compressed, and is stored in the file **juniper.conf**, in the **/config** file system, along with the last three committed versions of the configuration. However, with large networks, the current configuration file might exceed the available space in the **/config** file system. Compressing the current configuration file allows the file to fit in the file system, typically reducing the size of the file by 90 percent. The current configuration file is compressed on the second commit of the configuration after the first commit is made to include the **compress-configuration-files** statement.

NOTE: **We recommend that you enable compression of the router configuration files to minimize the amount of disk space that they require.**

Default
The current operational configuration file is uncompressed.

Required Privilege Level
system—To view this statement in the configuration.
system-control—To add this statement to the configuration.

Related Documentation
- Compressing the Current Configuration File on page 85

configuration

Syntax

```
configuration {
  transfer-interval interval;
  transfer-on-commit;
  archive-sites {
    file://<path>/<filename>;
    ftp://username@host:<port>url-path password password;
    http://username@host:<port>url-path password password;
    pasvftp://username@host:<port>url-path password password;
    scp://username@host:<port>url-path password password;
  }
}
```

Hierarchy Level

[edit system archival]

Release Information

Statement introduced before Junos OS Release 7.4.
Statement introduced in Junos OS Release 9.0 for EX Series switches.
Statement introduced in Junos OS Release 11.1 for the QFX Series.

Description

Configure the router or switch to periodically transfer its currently active configuration (or after each commit).

NOTE: The **[edit system archival]** hierarchy is not available on QFabric systems.

Options

The remaining statements are explained separately.

Required Privilege Level

system—To view this statement in the configuration.
system-control—To add this statement to the configuration.

Related Documentation

- Using Junos OS to Configure a Router or Switch to Transfer Its Configuration to an Archive Site on page 73
- archive
- archive-sites on page 121
- transfer-interval on page 152
- transfer-on-commit on page 153

configuration-servers

Syntax

```
configuration-servers {
   url;
}
```

Hierarchy Level [edit system autoinstallation]

Release Information

Statement introduced before Junos OS Release 7.4.
Statement introduced in Junos OS Release 9.0 for EX Series switches.

Description For J Series Services Routers and EX Series switches only, configure the URL address of a server from which to obtain configuration files. Examples of URLs:

tftp:*//hostname/path/filename*

ftp:*//username:prompt@ftp.hostname.net/filename /*

Required Privilege Level

system—To view this statement in the configuration.
system-control—To add this statement to the configuration.

Related Documentation

- Upgrading Software Using Automatic Software Download
- Getting Started Guide for your router model
- autoinstallation on page 123
- idle-timeout

domain-name

Syntax domain-name *domain-name*;

Hierarchy Level [edit system]

Release Information

Statement introduced before Junos OS Release 7.4.
Statement introduced in Junos OS Release 9.0 for EX Series switches.

Description Configure the name of the domain in which the router or switch is located. This is the default domain name that is appended to hostnames that are not fully qualified.

Options *domain-name*—Name of the domain.

Required Privilege Level

system—To view this statement in the configuration.
system-control—To add this statement to the configuration.

Related Documentation

- Configuring the Domain Name for the Router or Switch on page 64

domain-search

Syntax domain-search [*domain-list*];

Hierarchy Level [edit system],
[edit system services dhcp],
[edit system services dhcp],
[edit system services dhcp pool],
[edit system services dhcp static-binding]

Release Information Statement introduced before Junos OS Release 7.4.
Statement introduced in Junos OS Release 9.0 for EX Series switches.

Description Configure a list of domains to be searched.

Options ***domain-list***—A list of domain names to search. The list can contain up to six domain names, with a total of up to 256 characters.

Required Privilege Level system—To view this statement in the configuration.
system-control—To add this statement to the configuration.

Related Documentation

- Configuring the Domains to Search When a Router or Switch Is Included in Multiple Domains on page 65
- Configuring the Router or Interface to Act as a DHCP Server on J Series Services Routers
- Configuring a DHCP Server on EX Series Switches (CLI Procedure)

dump-device

Syntax

```
dump-device {
   compact-flash;
   removable-compact-flash;
   usb;
}
```

Hierarchy Level

[edit system]

Release Information

Statement introduced before Junos OS Release 7.4.

Description

For J Series Services Routers only. Configure the medium used for storing memory snapshots of system failure. When you specify the storage and an operating system fails, the operating system writes a snapshot of the state of the router when it failed to the storage medium. When the operating system is rebooted, the storage device is checked for a snapshot. If found, the snapshot of memory is written to the **/var/crash** directory on the router and can be examined by Juniper Networks customer support to help determine the cause of failure.

If the swap partition on the device medium is not large enough for the system memory snapshot, the snapshot is not successfully written to the directory. Use the **request system snapshot** command to specify the swap partition.

Options

compact-flash—The primary CompactFlash card.

removable-compact-flash—The CompactFlash card on the front of the router (J4300 and J6300 only) as the system software failure memory snapshot device.

usb—The device attached to the universal serial bus (USB) port.

Required Privilege Level

system—To view this statement in the configuration.
system-control—To add this statement to the configuration.

Related Documentation

- Getting Started Guide for your router model

events

Syntax events [*events*];

Hierarchy Level [edit system accounting]

Release Information Statement introduced before Junos OS Release 7.4.
Statement introduced in Junos OS Release 9.0 for EX Series switches.

Description Configure the types of events to track and log.

Options ***events***—Event types; can be one or more of the following:

- **change-log**—Audit configuration changes.
- **interactive-commands**—Audit interactive commands (any command-line input).
- **login**—Audit logins.

Required Privilege Level system—To view this statement in the configuration.
system-control—To add this statement to the configuration.

Related Documentation
- Configuring TACACS+ System Accounting

groups

Syntax

```
groups {
  group-name {
    configuration-data;
    when {
      chassis chassis-id;
      member member-id;
      model model-id;
      node node-id;
      routing-engine routing-engine-id;
      time <start-time> [to <end-time>];
    }
      conditional-data;
  }
  lccn-re0 {
    configuration-data;
  }
  lccn-re1 {
    configuration-data;
  }
}
```

Hierarchy Level [edit]

Release Information Statement introduced before Junos OS Release 7.4.

Description Create a configuration group.

Options —

group-name——Name of the configuration group. To configure multiple groups, specify more than one ***group-name***.

configuration-data—The configuration statements that are to be applied elsewhere in the configuration with the **apply-groups** statement, to have the target configuration inherit the statements in the group.

when *conditional-data*—Option introduced in Junos 11.3. The conditional statements that are to be applied when this configuration group is applied.

On routers that support multiple Routing Engines, you can also specify two special group names:

re0—Configuration statements that are to be applied to the Routing Engine in slot 0.

re1—Configuration statements that are to be applied to the Routing Engine in slot 1.

The configuration specified in group **re0** is applied only if the current Routing Engine is in slot 0; likewise, the configuration specified in group **re1** is applied only if the current Routing Engine is in slot 1. Therefore, both Routing Engines can use the same configuration file, each using only the configuration statements that apply to it. Each **re0** or **re1** group contains at a minimum the configuration for the hostname and the

management interface (**fxp0**). If each Routing Engine uses a different management interface, the group also should contain the configuration for the backup router and static routes.

(Routing matrix only) The TX Matrix router supports group names for the Routing Engines in each connected T640 router in the following formats:

NOTE: **The management Ethernet interface used for the TX Matrix Plus router, T1600 routers in a routing matrix, and PTX Series Packet Transport Switches, is em0. Junos OS automatically creates the router's management Ethernet interface, em0.**

- **lcc*n*-re0**—Configuration statements applied to the Routing Engine in slot 0 of the specified T640 router that is connected to a TX Matrix router.
- **lcc*n*-re1**—Configuration statements applied to the specified to the Routing Engine in slot 1 of the specified T640 router that is connected to a TX Matrix router.

  n identifies the T640 router and can be from 0 through 3.

The remaining statements are explained separately.

Required Privilege Level configure—To enter configuration mode.

Related Documentation
- Creating a Junos Configuration Group on page 97
- apply-groups
- apply-groups-except

host-name

Syntax host-name *hostname*;

Hierarchy Level [edit system]

Release Information Statement introduced before Junos OS Release 7.4.
Statement introduced in Junos OS Release 9.0 for EX Series switches.

Description Set the hostname of the router or switch.

Options ***hostname***—Name of the router or switch.

Required Privilege Level system—To view this statement in the configuration.
system-control—To add this statement to the configuration.

Related Documentation
- Configuring the Hostname of the Router or Switch on page 62

inet6-backup-router

Syntax inet6-backup-router *address* <destination *destination-address*>;

Hierarchy Level [edit system]

Release Information Statement introduced before Junos OS Release 7.4.
Statement introduced in Junos OS Release 9.0 for EX Series switches.

Description Set a default router (running IP version 6 [IPv6]) to use while the local router or switch (running IPv6) is booting and if the routing protocol processes fail to start. The Junos OS removes the route to this router or switch as soon as the software starts.

Options ***address***—Address of the default router.

destination ***destination-address***—(Optional) Destination address that is reachable through the backup router. You can include this option to achieve network reachability while loading, configuring, and recovering the router or switch, but without the risk of installing a default route in the forwarding table.

Default: All hosts (default route) are reachable through the backup router.

Required Privilege Level system—To view this statement in the configuration.
system-control—To add this statement to the configuration.

Related Documentation

- Configuring a Backup Router on page 69

interfaces

Syntax

```
interfaces {
  interface-name {
    bootp;
    rarp;
    slarp;
  }
}
```

Hierarchy Level

[edit system autoinstallation]

Release Information

Statement introduced before Junos OS Release 7.4.
Statement introduced in Junos OS Release 9.0 for EX Series switches.

Description

For J Series Services Routers and EX Series switches only. Configure the interface on which to perform autoinstallation. A request for an IP address is sent from the interface. Specify the IP address procurement protocol.

Options

rarpbootp—Send requests over serial interfaces with Frame Relay.

rarp—Send requests over Ethernet interfaces.

slarp—(On J Series Services Routers only) Send requests over serial interfaces with HDLC.

Required Privilege Level

system—To view this statement in the configuration.
system-control—To add this statement to the configuration.

Related Documentation

- Upgrading Software Using Automatic Software Download
- *J Series Services Router Basic LAN and WAN Access Configuration Guide*
- autoinstallation on page 123

load-key-file

Syntax load-key-file *URL filename*;

Hierarchy Level [edit system root-authentication],
[edit system login user *username* authentication]

Release Information Statement introduced before Junos OS Release 7.4.
Statement introduced in Junos OS Release 9.0 for EX Series switches.
Statement introduced in Junos OS Release 11.1 for the QFX Series.

Description Load RSA (SSH version 1 and SSH version 2) and DSA or ECDSA (SSH version 2) public keys from a previously-generated named file at a specified URL location. The file contains one or more SSH keys that are copied into the configuration when the command is issued.

Required Privilege Level admin—To view this statement in the configuration.
admin-control—To add this statement to the configuration.

Related Documentation

- Configuring the Root Password on page 76
- Configuring the Root Password
- Configuring Junos OS User Accounts
- Configuring Junos OS User Accounts

location (System)

Syntax

```
location {
   altitude feet;
   building name;
   country-code code;
   floor number;
   hcoord horizontal-coordinate;
   lata service-area;
   latitude degrees;
   longitude degrees;
   npa-nxx number;
   postal-code postal-code;
   rack number;
   vcoord vertical-coordinate;
}
```

Hierarchy Level

[edit system]

Release Information

Statement introduced before Junos OS Release 7.4.
Statement introduced in Junos OS Release 9.0 for EX Series switches.

Description

Configure the system location in various formats.

Options

altitude *feet*—Number of feet above sea level.

building *name*—Name of building. The name of the building can be 1 to 28 characters in length. If the string contains spaces, enclose it in quotation marks (" ").

country-code *code*—Two-letter country code.

floor *number*—Floor in the building.

hcoord *horizontal-coordinate*—Bellcore Horizontal Coordinate.

lata *service-area*—Long-distance service area.

latitude *degrees*—Latitude in degree format.

longitude *degrees*—Longitude in degree format.

npa-nxx *number*—First six digits of the phone number (area code and exchange).

postal-code *postal-code*—Postal code.

rack *number*—Rack number.

vcoord *vertical-coordinate*—Bellcore Vertical Coordinate.

Required Privilege Level

system—To view this statement in the configuration.
system-control—To add this statement to the configuration.

Related Documentation
- Configuring the Physical Location of the Router or Switch on page 75

login-tip

Syntax login-tip;

Hierarchy Level [edit system login class *class-name*]

Release Information Statement introduced before Junos OS Release 7.4.
Statement introduced in Junos OS Release 9.0 for EX Series switches.

Description Enable CLI tips at login.

Default Disabled.

Required Privilege Level system—To view this statement in the configuration.
system-control—To add this statement to the configuration.

Related Documentation
- Configuring CLI Tips on page 50

max-configurations-on-flash

Syntax max-configurations-on-flash *number*;

Hierarchy Level [edit system]

Release Information Statement introduced before Junos OS Release 7.4.

Description Specify the number of configurations stored on the CompactFlash card.

Options *number*—The number of configurations stored on the CompactFlash card.

Range: 0 through 49. The most recently saved configuration is number 0, and the oldest saved configuration is number 49.

Required Privilege Level system—To view this statement in the configuration.
system-control—To add this statement to the configuration.

Related Documentation
- Using Junos OS to Specify the Number of Configurations Stored on the CompactFlash Card on page 72

message

Syntax message *text*;

Hierarchy Level [edit system login]

Release Information Statement introduced before Junos OS Release 7.4.
Statement introduced in Junos OS Release 9.0 for EX Series switches.

Description Configure a system login message. This message appears before a user logs in.

You can format the message using the following special characters:

- \n—New line
- \t—Horizontal tab
- \'—Single quotation mark
- \"—Double quotation mark
- \\—Backslash

Options ***text***—Text of the message.

Required Privilege Level system—To view this statement in the configuration.
system-control—To add this statement to the configuration

Related Documentation

- Configuring the Junos OS to Display a System Login Message on page 89
- **announcement on page 119**

mirror-flash-on-disk

Syntax mirror-flash-on-disk;

Hierarchy Level [edit system]

Release Information Statement introduced before Junos OS Release 7.4.

Description Configure the hard disk to automatically mirror the contents of the CompactFlash card. The hard disk maintains a synchronized mirror copy of the CompactFlash card contents. Data written to the CompactFlash card is simultaneously updated in the mirrored copy of the hard disk. If the CompactFlash card fails to read data, the hard disk automatically retrieves its mirrored copy of the CompactFlash card. This command is not available on the J Series routers.

CAUTION: We recommend that you disable flash disk mirroring when you upgrade or downgrade the router.

You cannot issue the **request system snapshot** command while the **mirror-flash-on-disk** statement is enabled.

NOTE: After you have enabled or disabled the **mirror-flash-on-disk** statement, you must reboot the router for your changes to take effect. To reboot, issue the **request system reboot** command.

Required Privilege Level system—To view this statement in the configuration.
system-control—To add this statement to the configuration.

Related Documentation

- Configuring Automatic Mirroring of the CompactFlash Card on the Hard Disk Drive on page 71

name-server

Syntax

```
name-server {
  address;
}
```

Hierarchy Level

[edit system],
[edit system services dhcp],
[edit system services dhcp],
[edit system services dhcp pool],
[edit system services dhcp static-binding]

Release Information

Statement introduced before Junos OS Release 7.4.
Statement introduced in Junos OS Release 9.0 for EX Series switches.

Description

Configure one or more Domain Name System (DNS) name servers.

Options

address—Address of the name server. To configure multiple name servers, include multiple ***address*** options.

Required Privilege Level

system—To view this statement in the configuration.
system-control—To add this statement to the configuration.

Related Documentation

- Configuring a DNS Name Server for Resolving a Hostname into Addresses on page 65
- Configuring the Router or Interface to Act as a DHCP Server on J Series Services Routers
- Configuring a DHCP Server on EX Series Switches (CLI Procedure)

password (Proxy Systems)

Syntax

password *password*;

Hierarchy Level

[edit system proxy]

Release Information

Statement introduced in Junos OS Release 11.4.

Description

Configure the proxy server parameters for a device.

Required Privilege Level

system—To view this statement in the configuration.
system-control—To add this statement to the configuration.

Related Documentation

- Example: Configuring a Proxy Server for License Updates on page 66

pic-console-authentication

Syntax

```
pic-console authentication {
   (encrypted-password "password" | plain-text-password);
}
```

Hierarchy Level [edit system]

Release Information Statement introduced before Junos OS Release 7.4.

Description Configure console access to Physical Interface Cards (PICs).

Default Disabled. By default, there is no password setting for console access.

Options

encrypted-password " *password*"—Use MD5 or other encrypted authentication. Specify the MD5 or other password. You can specify only one encrypted password.

You cannot configure a blank password for **encrypted-password** using blank quotation marks (" "). You must configure a password whose number of characters range from 1 through 128 characters and enclose the password in quotation marks.

plain-text-password—Use a plain-text password. The CLI prompts you for the password and then encrypts it. The CLI displays the encrypted version, and the software places the encrypted version in its user database. You can specify only one plain-text password.

The default requirements for plain-text passwords are:

- The password must be between 6 and 128 characters long
- You can include most character classes in a password (uppercase letters, lowercase letters, numbers, punctuation marks, and other special characters). Control characters are not recommended.
- Valid passwords must contain at least one change of case or character class.

Required Privilege Level
admin—To view this statement in the configuration.
admin-control—To add this statement to the configuration.

Related Documentation

- Configuring the Junos OS to Set Console and Auxiliary Port Properties on page 83
- Configuring Password Authentication for Console Access to PICs

port (Syslog)

Syntax port *port number*;

Hierarchy Level [edit system syslog host *hostname* | other-routing-engine| scc-master)]

Release Information Statement introduced in Junos OS Release 11.3.

Description Specify the port number for the remote syslog server.

Options ***port number***—Port number of the remote syslog server.
Range: 0 through 65535
Default: 514

Required Privilege Level system—To view this statement in the configuration.
system-control—To add this statement to the configuration.

Related Documentation
- syslog
- host

port (Proxy Server)

Syntax port *port-number*;

Hierarchy Level [edit system proxy]

Release Information Statement introduced in Junos OS Release 11.4.

Description Configure the port number for the proxy server ranging from **0** through **65535**.

Required Privilege Level system—To view this statement in the configuration.
system-control—To add this statement to the configuration.

Related Documentation
- Example: Configuring a Proxy Server for License Updates on page 66

ports

Syntax

```
ports {
  auxiliary {
    disable;
    insecure;
    type terminal-type;
    port-type (mini-usb | rj45);
  }
  console {
    disable;
    insecure;
    log-out-on-disconnect;
    type terminal-type;
  }
}
```

Hierarchy Level

[edit system]

Release Information

Statement introduced before Junos OS Release 7.4.
Statement introduced in Junos OS Release 9.0 for EX Series switches.

Description

Configure the properties of the console and auxiliary ports. The ports are located on the router's craft interface.

See the switch's hardware documentation for port locations.

The remaining statements are explained separately.

Required Privilege Level

system—To view this statement in the configuration.
system-control—To add this statement to the configuration.

Related Documentation

- Configuring the Junos OS to Set Console and Auxiliary Port Properties on page 83

processes

Syntax

```
processes {
  process-name (enable | disable) failover (alternate-media | other-routing-engine);
  timeout seconds;
}
```

Hierarchy Level [edit system]

Release Information Statement introduced before Junos OS Release 7.4.
Statement introduced in Junos OS Release 9.0 for EX Series switches.

Description Configure which Junos OS processes are running on the router or switch.

CAUTION: **Never disable any of the software processes unless instructed to do so by a customer support engineer.**

Default All processes are enabled by default.

Options

(enable | disable)—(Optional) Enable or disable a specified process.

failover (alternate-media | other-routing-engine)—(Optional) For routers or switches with redundant Routing Engines only, switch to backup media if a process fails repeatedly. If a process fails four times within 30 seconds, the router or switch reboots from the alternate media or the other Routing Engine.

process-name—One of the valid process names. You can obtain a complete list of process names by using the CLI command completion feature. After specifying a process name, command completion also indicates any additional options for that process.

timeout *seconds*—(Optional) How often the system checks the watchdog timer, in seconds. If the watchdog timer has not been checked in the specified number of seconds, the system reloads. If you set the time value too low, it is possible for the system to reboot immediately after it loads.

Values: 15, 60, or 180

Default: 180 seconds (rounded up to 291 seconds by the Junos kernel)

Required Privilege Level
system—To view this statement in the configuration.
system-control—To add this statement to the configuration.

Related Documentation

- Disabling Junos OS Processes on page 87

proxy (System)

Syntax

```
proxy {
   server (hostname | ip-address);
   port port-number;
   username username;
   password password;
}
```

Hierarchy Level [edit system]

Release Information Statement introduced in Junos OS Release 11.4.

Description Configure the proxy server properties for a device.

The remaining statements are explained separately.

Required Privilege Level system—To view this statement in the configuration.
system-control—To add this statement to the configuration.

Related Documentation

- Example: Configuring a Proxy Server for License Updates on page 66

root-authentication

Syntax

```
root-authentication {
   (encrypted-password "password" | plain-text-password);
   ssh-dsa "public-key";
   ssh-ecdsa "public-key";
   ssh-rsa "public-key";
}
```

Hierarchy Level

[edit system]

Release Information

Statement introduced before Junos OS Release 7.4.
Statement introduced in Junos OS Release 9.0 for EX Series switches.

Description

Configure the authentication methods for the root-level user, whose username is **root**.

Options

encrypted-password "*password*"— MD5 or other encrypted authentication. Specify the MD5 or other password. You can specify only one encrypted password.

You cannot configure a blank password for **encrypted-password** using blank quotation marks (" "). You must configure a password whose number of characters range from 1 through 128 characters and enclose the password in quotation marks.

plain-text-password—Plain-text password. The CLI prompts you for the password and then encrypts it. The CLI displays the encrypted version, and the software places the encrypted version in its user database. You can specify only one plain-text password.

ssh-dsa "*public-key*"—SSH version 2 authentication. Specify the DSA (SSH version 2) public key. You can specify one or more public keys.

ssh-rsa "*public-key*"—SSH version 1 authentication. Specify the RSA (SSH version 1 and SSH version 2) public key. You can specify one or more public keys.

Required Privilege Level

admin—To view this statement in the configuration.
admin-control—To add this statement to the configuration.

Related Documentation

- Configuring the Root Password on page 76
- authentication

root-login

Syntax root-login (allow | deny | deny-password);

Hierarchy Level [edit system services ssh]

Release Information Statement introduced before Junos OS Release 7.4.
Statement introduced in Junos OS Release 9.0 for EX Series switches.
Statement introduced in Junos OS Release 11.1 for the QFX Series.

Description Control user access through SSH.

Default Allow user access through SSH.

Options **allow**—Allow users to log in to the router or switch as root through SSH.

deny—Disable users from logging in to the router or switch as root through SSH.

deny-password—Allow users to log in to the router or switch as root through SSH when the authentication method (for example, RSA authentication) does not require a password.

Required Privilege Level admin—To view this statement in the configuration.
admin-control—To add this statement to the configuration.

Related Documentation

- Configuring SSH Service for Remote Access to the Router or Switch

saved-core-context

Syntax (saved-core-context | no-saved-core-context);

Hierarchy Level [edit system]

Release Information Statement introduced before Junos OS Release 7.4.

Description Configure whether the router saves core files generated by internal Junos processes, along with contextual information (system log files and a copy of the current configuration):

- **saved-core-context**—The router saves each cores file and its associated context in a compressed tar file named **/var/tmp/*process-name*.core.*core-number*.tgz**.
- **no-saved-core-context**—The router does not save cores files and their associated context.

The router saves core files.

Required Privilege Level admin—To view this statement in the configuration.
admin-control—To add this statement to the configuration.

Related Documentation
- Saving Core Files from Junos OS Processes on page 88
- saved-core-files on page 149

saved-core-files

Syntax saved-core-files *number*;

Hierarchy Level [edit system]

Release Information Statement introduced before Junos OS Release 7.4.

Description Save core files generated by internal Junos processes, but not the associated contextual information (configuration and system log files).

Options *number*—Maximum number of core files to save.
Range: 1 through 10

Required Privilege Level admin—To view this statement in the configuration.
admin-control—To add this statement to the configuration.

Related Documentation
- Saving Core Files from Junos OS Processes on page 88
- saved-core-context on page 149

server (Proxy)

Syntax server (*hostname* | *ip-address*);

Hierarchy Level [edit system proxy]

Release Information Statement introduced in Junos OS Release 11.4.

Description Configure the proxy server name or IP address.

Required Privilege Level system—To view this statement in the configuration.
system-control—To add this statement to the configuration.

Related Documentation
- Example: Configuring a Proxy Server for License Updates on page 66

static-host-mapping

Syntax

```
static-host-mapping {
  hostname {
    alias [ aliases ];
    inet [ addresses ];
    sysid system-identifier;
  }
}
```

Hierarchy Level [edit system]

Release Information Statement introduced before Junos OS Release 7.4.

Description Map a hostname to one or more IP addresses and aliases, and configure an International Organization for Standardization (ISO) system identifier (system ID).

Options **alias *alias***—Alias for the hostname.

hostname—Fully qualified hostname.

inet *address*—IP address. You can specify one or more IP addresses for the host.

sysid *system-identifier*—ISO system identifier (system ID). This is the 6-byte portion of the Intermediate System-to-Intermediate System (IS-IS) network service access point (NSAP). We recommend that you use the host's IP address represented in binary-coded decimal (BCD) format. For example, the IP address 208.197.169.18 is 2081.9716.9018 in BCD.

Required Privilege Level system—To view this statement in the configuration.
system-control—To add this statement to the configuration.

Related Documentation
- Configuring the Hostname of the Router or Switch on page 62

system

Syntax system { ... }

Hierarchy Level [edit]

Release Information Statement introduced before Junos OS Release 7.4.
Statement introduced in Junos OS Release 9.0 for EX Series switches.

Description Configure system management properties.

Required Privilege Level system—To view this statement in the configuration.
system-control—To add this statement to the configuration.

Related Documentation

- System Management Configuration Statements on page 113

transfer-interval (Configuration)

Syntax transfer-interval *interval*;

Hierarchy Level [edit system archival configuration]

Release Information Statement introduced before Junos OS Release 7.4.
Statement introduced in Junos OS Release 9.0 for EX Series switches.
Statement introduced in Junos OS Release 11.1 for the QFX Series.

Description Configure the router or switch to periodically transfer its currently active configuration to an archive site.

NOTE: **The edit system archival hierarchy is not available on QFabric systems.**

Options ***interval***—Interval at which to transfer the current configuration to an archive site.

Range: 15 through 2880 minutes

NOTE: **The [edit system archival] hierarchy is not available on QFabric systems.**

Required Privilege Level system—To view this statement in the configuration.
system-control—To add this statement to the configuration.

Related Documentation

- Configuring the Transfer Interval for Periodic Transfer of the Active Configuration to an Archive Site on page 73
- archive
- configuration on page 127
- transfer-on-commit on page 153

transfer-on-commit

Syntax transfer-on-commit;

Hierarchy Level [edit system archival configuration]

Release Information Statement introduced before Junos OS Release 7.4.
Statement introduced in Junos OS Release 9.0 for EX Series switches.
Statement introduced in Junos OS Release 11.1 for the QFX Series.

Description Configure the router or switch to transfer its currently active configuration to an archive site each time you commit a candidate configuration.

NOTE: When specifying a URL in a Junos OS statement using an IPv6 host address, you must enclose the entire URL in quotation marks (" ") and enclose the IPv6 host address in brackets ([ ]). For example, "ftp:*//username<:password>@[ipv6-host-address]<:port>/url-path*" .

NOTE: The **[edit system archival]** hierarchy is not available on QFabric systems.

Required Privilege Level system—To view this statement in the configuration.
system-control—To add this statement to the configuration.

Related Documentation

- Configuring Transfer of the Current Active Configuration When a Configuration Is Committed on page 74
- archive
- configuration on page 127
- transfer-interval on page 152

trusted-key

Syntax trusted-key [*key-numbers*];

Hierarchy Level [edit system ntp]

Release Information Statement introduced before Junos OS Release 7.4.
Statement introduced in Junos OS Release 9.0 for EX Series switches.

Description For NTP, configure the keys you are allowed to use when you configure the local router or switch to synchronize its time with other systems on the network.

Options ***key-numbers***—One or more key numbers. Each key can be any 32-bit unsigned integer except 0.

Required Privilege Level system—To view this statement in the configuration.
system-control—To add this statement to the configuration.

Related Documentation

- Configuring NTP Authentication Keys
- authentication-key
- broadcast
- peer
- server

username (System)

Syntax username *username*;

Hierarchy Level [edit system proxy]

Release Information Statement introduced in Junos OS Release 11.4.

Description Configure the username as configured in the proxy server.

Required Privilege Level system—To view this statement in the configuration.
system-control—To add this statement to the configuration.

Related Documentation

- Example: Configuring a Proxy Server for License Updates on page 66

PART 3

Administration

CHAPTER 8

File Management Commands

file archive

Syntax

file archive destination *destination* source *source*
<compress>

Release Information

Command introduced before Junos OS Release 7.4.
Command introduced in Junos OS Release 9.0 for EX Series switches.
Command introduced in Junos OS Release 11.1 for the QFX Series.

Description

Archive, and optionally compress, one or multiple local system files as a single file, locally or at a remote location.

Options

destination ***destination***—Destination of the archived file or files. Specify the destination as a URL or filename. The Junos OS adds one of the following suffixes if the destination filename does not already have it:

- For archived files—The suffix **.tar**
- For archived and compressed files—The suffix **.tgz**

source ***source***—Source of the original file or files. Specify the source as a URL or filename.

compress—(Optional) Compress the archived file with the GNU zip (gzip) compression utility. The compressed files have the suffix **.tgz**.

Required Privilege Level

maintenance

List of Sample Output

file archive (Multiple Files) on page 159
file archive (Single File) on page 159
file archive (with Compression) on page 159

Output Fields

When you enter this command, you are provided feedback on the status of your request.

Sample Output

file archive (Multiple Files)

The following sample command archives all message files in the local directory **/var/log/messages** as the single file **messages-archive.tar**.

```
user@host> file archive source /var/log/messages* destination /var/log/messages-archive.tar
/usr/bin/tar: Removing leading / from absolute path names in the archive.

user@host>
```

file archive (Single File)

The following sample command archives one message file in the local directory **/var/log/messages** as the single file **messages-archive.tar**.

```
user@host> file archive source /var/log/messages destination /var/log/messages-archive.tar
/usr/bin/tar: Removing leading / from absolute path names in the archive.
user@host
```

file archive (with Compression)

The following sample command archives and compresses all message files in the local directory **/var/log/messages** as the single file **messages-archive.tgz**.

```
user@host> file archive compress source /var/log/messages* destination
/var/log/messages-archive.tgz
/usr/bin/tar: Removing leading / from absolute path names in the archive.
```

file checksum md5

Syntax file checksum md5 <*pathname*> *filename*

Release Information Command introduced before Junos OS Release 7.4.
Command introduced in Junos OS Release 9.0 for EX Series switches.
Command introduced in Junos OS Release 11.1 for the QFX Series.

Description Calculate the Message Digest 5 (MD5) checksum of a file.

Options ***pathname***—(Optional) Path to a filename.

filename—Name of a local file for which to calculate the MD5 checksum.

Required Privilege Level maintenance

Related Documentation

- Configuring Checksum Hashes for a Commit Script in the *Junos OS Configuration and Operations Automation Guide*
- Configuring Checksum Hashes for an Event Script in the *Junos OS Configuration and Operations Automation Guide*
- Configuring Checksum Hashes for an Op Script in the *Junos OS Configuration and Operations Automation Guide*
- Executing an Op Script from a Remote Site in the *Junos OS Configuration and Operations Automation Guide*
- file checksum sha-256 on page 162
- file checksum sha1 on page 161
- op

List of Sample Output file checksum md5 on page 160

Output Fields When you enter this command, you are provided feedback on the status of your request.

Sample Output

file checksum md5

```
user@host> file checksum md5 jbundle-5.3R2.4-export-signed.tgz
MD5 (jbundle-5.3R2.4-export-signed.tgz) = 2a3b69e43f9bd4893729cc16f505a0f5
```


file checksum sha1

Syntax file checksum sha1 <*pathname*> *filename*

Release Information Command introduced in Junos OS Release 9.5.
Command introduced in Junos OS Release 9.5 for EX Series switches.
Command introduced in Junos OS Release 11.1 for the QFX Series.

Description Calculate the Secure Hash Algorithm (SHA-1) checksum of a file.

Options ***pathname***—(Optional) Path to a filename.

filename—Name of a local file for which to calculate the SHA-1 checksum.

Required Privilege Level maintenance

Related Documentation

- Configuring Checksum Hashes for a Commit Script in the *Junos OS Configuration and Operations Automation Guide*
- Configuring Checksum Hashes for an Event Script in the *Junos OS Configuration and Operations Automation Guide*
- Configuring Checksum Hashes for an Op Script in the *Junos OS Configuration and Operations Automation Guide*
- Executing an Op Script from a Remote Site in the *Junos OS Configuration and Operations Automation Guide*
- file checksum md5 on page 160
- file checksum sha-256 on page 162
- op

List of Sample Output file checksum sha1 on page 161

Output Fields When you enter this command, you are provided feedback on the status of your request.

Sample Output

file checksum sha1

```
user@host> file checksum sha1 /var/db/scripts/opscript.slax

SHA1 (/var/db/scripts/commitscript.slax) = ba9e47120c7ce55cff29afd73eacd370e162c676
```

file checksum sha-256

Syntax file checksum sha-256 <*pathname*> *filename*

Release Information Command introduced in Junos OS Release 9.5.
Command introduced in Junos OS Release 9.5 for EX Series switches.
Command introduced in Junos OS Release 11.1 for the QFX Series.

Description Calculate the Secure Hash Algorithm 2 family (SHA-256) checksum of a file.

Options ***pathname***—(Optional) Path to a filename.

filename—Name of a local file for which to calculate the SHA-256 checksum.

Required Privilege Level maintenance

Related Documentation

- Configuring Checksum Hashes for a Commit Script in the *Junos OS Configuration and Operations Automation Guide*
- Configuring Checksum Hashes for an Event Script in the *Junos OS Configuration and Operations Automation Guide*
- Configuring Checksum Hashes for an Op Script in the *Junos OS Configuration and Operations Automation Guide*
- Executing an Op Script from a Remote Site in the *Junos OS Configuration and Operations Automation Guide*
- file checksum md5 on page 160
- file checksum sha1 on page 161
- op

List of Sample Output file checksum sha-256 on page 162

Output Fields When you enter this command, you are provided feedback on the status of your request.

Sample Output

file checksum sha-256

```
user@host> file checksum sha-256 /var/db/scripts/commitscript.slax

SHA256 (/var/db/scripts/commitscript.slax) =
94c2b061fb55399e15babd2529453815601a602b5c98e5c12ed929c9d343dd71
```


file compare

Syntax

file compare (files *filename filename*)
<context | unified>
<ignore-white-space>

Release Information

Command introduced before Junos OS Release 7.4.
Command introduced in Junos OS Release 9.0 for EX Series switches.
Command introduced in Junos OS Release 11.1 for the QFX Series.

Description

Compare two local files and describe the differences between them in default, context, or unified output styles:

- **Default**—In the first line of output, **c** means lines were changed between the two files, **d** means lines were deleted between the two files, and **a** means lines were added between the two files. The numbers preceding this alphabetical marker represent the first file, and the lines after the alphabetical marker represent the second file. A left angle bracket (**<**) in front of output lines refers to the first file. A right angle bracket (**>**) in front of output lines refers to the second file.
- **Context**—The display is divided into two parts. The first part is the first file; the second part is the second file. Output lines preceded by an exclamation point (**!**) have changed. Additions are marked with a plus sign (**+**), and deletions are marked with a minus sign (**-**).
- **Unified**—The display is preceded by the line number from the first and the second file (*xx*,*xxx*,*x*). Before the line number, additions to the file are marked with a plus sign (**+**), and deletions to the file are marked with a minus sign (**-**). The body of the output contains the affected lines. Changes are viewed as additions plus deletions.

Options

files *filename*—Names of two local files to compare.

context—(Optional) Display output in context format.

ignore-white-space—(Optional) Ignore changes in the amount of white space.

unified—(Optional) Display output in unified format.

Required Privilege Level

none

List of Sample Output

file compare files on page 164
file compare files context on page 164
file compare files unified on page 164
file compare files unified ignore-white-space on page 164

Output Fields

When you enter this command, you are provided feedback on the status of your request.

Sample Output

file compare files

```
user@host> file compare files /tmp/one /tmp/two
100c100
<             full-name "File 1";
---
>             full-name "File 2";
102c102
<             class foo; # 'foo' is not defined
---
>             class super-user;
```

file compare files context

```
user@host> file compare files /tmp/one /tmp/two context
*** /tmp/one    Wed Dec  3 17:12:50 2003
--- /tmp/two    Wed Dec  3 09:13:14 2003
***************
*** 97,104 ****
              }
          }
          user bill {
!             full-name "Bill Smith";
!             class foo; # 'foo' is not defined
              authentication {
                  encrypted-password SECRET;
              }
--- 97,105 ----
              }
          }
          user bill {
!             full-name "Bill Smith";
!             uid 1089;
!             class super-user;
              authentication {
                  encrypted-password SECRET;
              }
```

file compare files unified

```
user@host> file compare files /tmp/one /tmp/two unified
--- /tmp/one    Wed Dec  3 17:12:50 2003
+++ /tmp/two    Wed Dec  3 09:13:14 2003
@@ -97,8 +97,9 @@
             }
         }
         user bill {
-            full-name "Bill Smith";
-            class foo; # 'foo' is not defined
+            full-name "Bill Smith";
+            uid 1089;
+            class super-user;
             authentication {
                 encrypted-passwordSECRET;
             }
```

file compare files unified ignore-white-space

```
user@host> file compare files /tmp/one /tmp/two unified ignore-white-space
--- /tmp/one    Wed Dec  3 09:13:10 2003
+++ /tmp/two    Wed Dec  3 09:13:14 2003
@@ -99,7 +99,7 @@
         user bill {
```

```
                full-name "Bill Smith";
                uid 1089;
-               class foo; # 'foo' is not defined
+               class super-user;
                authentication {
                     encrypted-password <SECRET>; # SECRET-DATA
                }
```

file copy

Syntax

file copy *source destination*
<source-address *address*>

Release Information

Command introduced before Junos OS Release 7.4.
source-address option added in Junos OS Release 7.4.
Command introduced in Junos OS Release 9.0 for EX Series switches.
Command introduced in Junos OS Release 11.1 for QFX Series switches.

Description

Copy files from one place to another on the local router or switch or between the local router or switch and a remote system.

Options

source—Source of the original file. Specify this as a URL or filename.

destination—Destination of the copied file. Specify this as a URL or filename. If you are copying a file to the current directory (your home directory on the local router or switch) and are not renaming the file, specify the destination with a period (.).

source-address *address*—(Optional) Source IP host address. This option is useful for specifying the source address of a secure copy (scp) file transfer.

Required Privilege Level

maintenance

Related Documentation

- Format for Specifying Filenames and URLs in Junos OS CLI Commands on page 40
- Default Directories for Junos OS File Storage on the Router or Switch on page 42

List of Sample Output

Output Fields

When you enter this command, you are provided feedback on the status of your request.

Sample Output

file copy (A File from the Router or Switch to a PC)

```
user@host> file copy /var/tmp/rpd.core.4 berry:/c/junipero/tmp

...transferring.file...... |          0 KB |   0.3 kB/s | ETA: 00:00:00 | 100%
```

file copy (A Configuration File

The following sample command copies a configuration file from Routing Engine 0 to Routing Engine 1:

Between Routing Engines)

```
user@host> file copy /config/juniper.conf re1:/var/tmp/copied-juniper.conf
```

file copy (A Log File Between Routing Engines)

The following sample command copies a log file from Routing Engine 0 to Routing Engine 1:

```
user@host> file copy lcc0-re0:/var/log/chassisd lcc0-re1:/var/tmp
```

file copy (A File from the TX Matrix Plus Router to a T1600 Router Connected to the TX Matrix Plus Router)

The following sample command copies a text file from Routing Engine 1 on the switch-fabric chassis sfc0 to Routing Engine 1 on the line-card chassis lcc0:

```
user@host> file copy sfc0-re1:/tmp/sample.txt lcc0-re1:/var/tmp
```

Sample Output

file delete

Syntax

file delete *filename*
<purge>

Release Information

Command introduced before Junos OS Release 7.4.
Command introduced in Junos OS Release 9.0 for EX Series switches.
Command introduced in Junos OS Release 11.1 for the QFX Series.

Description

Delete a file on the local router or switch.

Options

filename—Name of the file to delete. For a routing matrix, include chassis information in the filename if the file to be deleted is not local to the Routing Engine from which the command is issued.

purge—(Optional) Overwrite regular files before deleting them.

Required Privilege Level

maintenance

List of Sample Output

file delete on page 168
file delete (Routing Matrix) on page 168

Output Fields

When you enter this command, you are provided feedback on the status of your request.

Sample Output

file delete

```
user@host> file list /var/tmp
dcd.core
rpd.core
snmpd.core

user@host> file delete /var/tmp/snmpd.core
user@host> file list /var/tmp
dcd.core
rpd.core
```

file delete (Routing Matrix)

```
user@host> file list lcc0-re0:/var/tmp
dcd.core
rpd.core
snmpd.core

user@host> file delete lcc0-re0:/var/tmp/snmpd.core
user@host> file list /var/tmp
dcd.core
rpd.core
```

file list

Syntax

file list
<detail | recursive>
<*filename*>

Release Information

Command introduced before Junos OS Release 7.4.
Command introduced in Junos OS Release 9.0 for EX Series switches.
Command introduced in Junos OS Release 11.1 for the QFX Series.

Description

Display a list of files on the local router or switch.

Options

none—Display a list of all files for the current directory.

detail | recursive—(Optional) Display detailed output or descend recursively through the directory hierarchy, respectively.

filename—(Optional) Display a list of files. For a routing matrix, the filename must include the chassis information.

Additional Information

The default directory is the home directory of the user logged in to the router or switch. To view available directories, enter a space and then a backslash (/) after the **file list** command. To view files within a specific directory, include a backslash followed by the directory and, optionally, subdirectory name after the **file list** command.

Required Privilege Level

maintenance

List of Sample Output

file list on page 170
file list (Routing Matrix) on page 170

Output Fields

When you enter this command, you are provided feedback on the status of your request.

Sample Output

file list

```
user@host> file list /var/tmp
dcd.core
rpd.core
snmpd.core
```

file list (Routing Matrix)

```
user@host> file list lcc0-re0:var/tmp
lcc0-re0:
--------------------------------------------------------------------------
/var/tmp/:
.gdbinit
.pccardd
Test/
chassisd*
chassisd.nathan*
check_time*
cores/
diagTestPrep*
diagtest*
diagtest.regress*
do_switchovers*
dump_test*
err.manoj.log
esw_clearstats*
esw_counter*
esw_debug*
esw_debug_ge*
esw_filt_test*
esw_filter_tnp_addr*
esw_getstats*
esw_phy*
esw_stats*
```

file rename

Syntax file rename *source destination*

Release Information Command introduced before Junos OS Release 7.4.
Command introduced in Junos OS Release 9.0 for EX Series switches.
Command introduced in Junos OS Release 11.1 for the QFX Series.

Description Rename a file on the local router or switch.

Options ***destination***—New name for the file.

source—Original name of the file. For a routing matrix, the filename must include the chassis information.

Required Privilege Level maintenance

List of Sample Output file rename on page 172
file rename (Routing Matrix) on page 172

Output Fields When you enter this command, you are provided feedback on the status of your request.

Sample Output

file rename

The following example lists the files in **/var/tmp**, renames one of the files, and then displays the list of files again to reveal the newly named file.

```
user@host> file list /var/tmp
dcd.core
rpd.core
snmpd.core

user@host> file rename /var/tmp/dcd.core /var/tmp/dcd.core.990413
user@host> file list /var/tmp
dcd.core.990413
rpd.core
snmpd.core
```

file rename (Routing Matrix)

The following example lists the files in **/var/tmp**, renames one of the files, and then displays the list of files again to reveal the newly named file.

```
user@host> file list lcc0-re1:/var/tmp
lcc0-re1:
--------------------------------------------------------------------------

/var/tmp:
.pccardd
sartre.conf
snmpd
syslogd.core-tarball.0.tgz

user@host> file rename lcc0-re0:/var/tmp/snmpd /var/tmp/snmpd.rr
user@host> file list lcc0-re1:/var/tmp
lcc0-re1:
--------------------------------------------------------------------------

/var/tmp:
.pccardd
sartre.conf
snmpd.rr
syslogd.core-tarball.0.tgz
```

file show

Syntax

file show *filename*
<encoding (base64 | raw)>

Release Information

Command introduced before Junos OS Release 7.4.
Command introduced in Junos OS Release 9.0 for EX Series switches.
Command introduced in Junos OS Release 11.1 for the QFX Series.

Description

Display the contents of a file.

Options

filename—Name of a file. For a routing matrix, the filename must include the chassis information.

encoding (base64 | raw)—(Optional) Encode file contents with base64 encoding or show raw text.

Required Privilege Level

maintenance

List of Sample Output

file show on page 174
file show (Routing Matrix) on page 174

Output Fields

When you enter this command, you are provided feedback on the status of your request.

Sample Output

file show

```
user@host> file show /var/log/messages
Apr 13 21:00:08 romney /kernel: so-1/1/2: loopback suspected; going to standby.
Apr 13 21:00:40 romney /kernel: so-1/1/2: loopback suspected; going to standby.
Apr 13 21:02:48 romney last message repeated 4 times
Apr 13 21:07:04 romney last message repeated 8 times
Apr 13 21:07:13 romney /kernel: so-1/1/0: Clearing SONET alarm(s) RDI-P
Apr 13 21:07:29 romney /kernel: so-1/1/0: Asserting SONET alarm(s) RDI-P
...
```

file show (Routing Matrix)

```
user@host> file show lcc0-re0:/var/tmp/.gdbinit
lcc0-re0:
--------------------------------------------------------------------------
#####################################################################
# Settings
#####################################################################

set print pretty

#####################################################################
# Basic stuff
#####################################################################

define msgbuf
        printf "%s", msgbufp->msg_ptr
end
# hex dump of a block of memory
# usage: dump address length
define dump
   p $arg0, $arg1
   set $ch = $arg0
   set $j = 0
   set $n = $arg1
   while ($j < $n)
        #printf "%x %x ",&$ch[$j],$ch[$j]
        printf "%x ",$ch[$j]
        set $j = $j + 1
        if (!($j % 16))
                printf "\n"
        end
   end
end
```

CHAPTER 9

System Software Administrative Commands

clear system commit

Syntax clear system commit

Release Information Command introduced before Junos OS Release 7.4.
Command introduced in Junos OS Release 9.0 for EX Series switches.
Command introduced in Junos OS Release 11.1 for the QFX Series.

Description Clear any pending commit operation.

Options This command has no options.

Required Privilege Level maintenance (or the actual user who scheduled the commit)

Related Documentation

- show system commit on page 234

List of Sample Output

Output Fields When you enter this command, you are provided feedback on the status of your request.

Sample Output

clear system commit

```
user@host> clear system commit
Pending commit cleared.
```

clear system commit (None Pending)

```
user@host> clear system commit
No commit scheduled.
```

clear system commit (User Does Not Have Required Privilege Level)

```
user@host> clear system commit
error: Permission denied
```

clear system reboot

Syntax

clear system reboot
<both-routing-engines>

Syntax (EX Series Switches)

clear system reboot
<all-members>
<both-routing-engines>
<local>
<member *member-id*>

Syntax (TX Matrix Router)

clear system reboot
<both-routing-engines>
<all-chassis | all-lcc | lcc *number* | scc>

Syntax (TX Matrix Plus Router)

clear system reboot
<both-routing-engines>
<all-chassis | all-lcc | lcc *number* | sfc *number*>

Syntax (QFX Series)

clear system reboot
<infrastructure *name*>
<interconnect-device *name*>
<node-group *name*>

Release Information

Command introduced before Junos OS Release 7.4.
Command introduced in Junos OS Release 9.0 for EX Series switches.
sfc option introduced for the TX Matrix Plus router in Junos OS Release 9.6.
Command introduced in Junos OS Release 11.1 for the QFX Series.

Description

Clear any pending system software reboots or halts. When issued on a TX Matrix router without any options, the default behavior clears all pending system software reboots or halts on all T640 routers connected to the TX Matrix router. When issued on a TX Matrix Plus router without any options, the default behavior clears all pending system software reboots or halts on all T1600 or T4000 routers connected to the TX Matrix Plus router.

Options

none—Clear all pending system software reboots or halts.

all-chassis—(TX Matrix routers and TX Matrix Plus routers only) (Optional) Clear all halt or reboot requests for all the Routing Engines in the chassis.

all-lcc—(TX Matrix routers and TX Matrix Plus routers only) (Optional) On a TX Matrix router, clear all halt or reboot requests for all T640 routers (or line-card chassis) connected to the TX Matrix router. On a TX Matrix Plus router, clear all halt or reboot requests on the l connected T1600 or T4000 LCCs.

all-members—(EX4200 switches only) (Optional) Clear all halt or reboot requests on all members of the Virtual Chassis configuration.

both-routing-engines—(Systems with multiple Routing Engines) (Optional) Clear all halt or reboot requests on both Routing Engines. On a TX Matrix router, clear both Routing Engines on all chassis connected to the TX Matrix router. Likewise, on a TX Matrix

Plus router, clear both Routing Engines on all chassis connected to the TX Matrix Plus router.

infrastructure ***name***—(QFabric systems) (Optional) Clear all halt or reboot requests on the fabric control Routing Engines or fabric manager Routing Engines.

interconnect-device ***name***—(QFabric systems) (Optional) Clear all halt or reboot requests on the Interconnect device.

lcc ***number***—(TX Matrix routers and TX Matrix Plus routers only) (Optional) On a TX Matrix router, clear all halt or reboot requests for a specific T640 router that is connected to the TX Matrix router. On a TX Matrix Plus router, clear all halt or reboot requests for a specific router that is connected to the TX Matrix Plus router.

Replace *number* with the following values depending on the LCC configuration:

- 0 through 3, when T640 routers are connected to a TX Matrix router in a routing matrix.
- 0 through 3, when T1600 routers are connected to a TX Matrix Plus router in a routing matrix.
- 0 through 7, when T1600 routers are connected to a TX Matrix Plus router with 3D SIBs in a routing matrix.
- 0, 2, 4, or 6, when T4000 routers are connected to a TX Matrix Plus router with 3D SIBs in a routing matrix.

local—(EX4200 switches only) (Optional) Clear all halt or reboot requests on the local Virtual Chassis member.

member ***member-id***—(EX4200 switches only) (Optional) Clear all halt or reboot requests on the specified member of the Virtual Chassis configuration. Replace ***member-id*** with a value from 0 through 9.

node-group ***name***—(QFabric systems) (Optional) Clear all halt or reboot requests on the Node group.

scc—(TX Matrix routers only) (Optional) Clear all halt or reboot requests for the TX Matrix router (or switch-card chassis).

sfc ***number***—(TX Matrix Plus routers only) (Optional) Clear all halt or reboot requests for the TX Matrix Plus router. Replace ***number*** with 0.

Required Privilege Level

maintenance

Related Documentation

- request system reboot on page 203
- request system reboot
- Rebooting and Halting a QFX Series Product
- *Routing Matrix with a TX Matrix Plus Router Solutions Page*

List of Sample Output

clear system reboot on page 180
clear system reboot (TX Matrix Router) on page 180
clear system reboot (QFX Series) on page 180

Output Fields When you enter this command, you are provided feedback on the status of your request.

Sample Output

clear system reboot

```
user@host> clear system reboot
reboot requested by root at Sat Dec 12 19:37:34 1998
[process id 17855]
Terminating...
```

clear system reboot (TX Matrix Router)

```
user@host> clear system reboot
scc-re0:
--------------------------------------------------------------------------
No shutdown/reboot scheduled.
lcc0-re0:
--------------------------------------------------------------------------
No shutdown/reboot scheduled.
lcc2-re0:
--------------------------------------------------------------------------
No shutdown/reboot scheduled.
```

clear system reboot (QFX Series)

```
user@switch> clear system reboot node-group node1
No shutdown/reboot scheduled.
```

configure

Syntax

configure
<dynamic>
<exclusive>
<private>

Release Information

Command introduced before Junos OS Release 7.4.
Command introduced in Junos OS Release 9.0 for EX Series switches.

Description

Enter configuration mode. When this command is entered without any optional keywords, everyone can make configuration changes and commit all changes made to the configuration.

Options

none—Enter configuration mode.

dynamic—(Optional) Configure routing policies and certain routing policy objects in a dynamic database that is not subject to the same verification required in the standard configuration database. As a result, the time it takes to commit changes to the dynamic database is much shorter than for the standard configuration database. You can then reference these policies and policy objects in routing policies you configure in the standard database.

exclusive—(Optional) Lock the candidate configuration for as long as you remain in configuration mode, allowing you to make changes without interference from other users. Other users can enter and exit configuration mode, but they cannot change the configuration.

private—(Optional) Allow multiple users to edit different parts of the configuration at the same time and to commit only their own changes, or to roll back without interfering with one another's changes. You cannot commit changes in configure private mode when another user is in configure exclusive mode.

Additional Information

For more information about the different methods of entering configuration mode and the restrictions that apply, see the Junos OS System Basics Configuration Guide.

Required Privilege Level

configure

Related Documentation

- show configuration on page 230

List of Sample Output

configure on page 182

Output Fields

When you enter this command, you are placed in configuration mode and the system prompt changes from ***hostname>*** to ***hostname#***.

Sample Output

configure

```
user@host> configure
Entering configuration mode
[edit]
user@host#
```

request system configuration rescue delete

Syntax request system configuration rescue delete

Release Information Command introduced before Junos OS Release 7.4.
Command introduced in Junos OS Release 9.0 for EX Series switches.
Command introduced in Junos OS Release 11.1 for the QFX Series.

Description Delete an existing rescue configuration.

NOTE: The **[edit system configuration]** hierarchy is not available on QFabric systems.

Options This command has no options.

Required Privilege Level maintenance

Related Documentation

- request system configuration rescue save on page 184
- request system software rollback
- show system commit on page 234

List of Sample Output request system configuration rescue delete on page 183

Output Fields This command produces no output.

Sample Output

request system configuration rescue delete

```
user@host> request system configuration rescue delete
```

request system configuration rescue save

Syntax request system configuration rescue save

Release Information Command introduced before Junos OS Release 7.4.
Command introduced in Junos OS Release 9.0 for EX Series switches.
Command introduced in Junos OS Release 11.1 for the QFX Series.

Description Save the most recently committed configuration as the rescue configuration so that you can return to it at any time by using the **rollback** command.

NOTE: The **[edit system configuration]** hierarchy is not available on QFabric systems.

Options This command has no options.

Required Privilege Level maintenance

Related Documentation

- request system software delete
- request system software rollback
- show system commit on page 234

List of Sample Output request system configuration rescue save on page 184

Output Fields This command produces no output.

Sample Output

request system configuration rescue save

```
user@host> request system configuration rescue save
```

request system halt

Syntax

```
request system halt
<at time>
<both-routing-engines>
<other-routing-engine>
<in minutes>
<media (compact-flash | disk | removable-compact-flash | usb)>
<message "text">
```

Syntax (EX Series Switches)

```
request system halt
<all-members>
<at time>
<both-routing-engines>
<in minutes>
<local>
<media (external | internal)>
<member member-id>
<message "text">
<other-routing-engine>
<slice slice>
```

Syntax (PTX Series)

```
request system halt
<at time>
<both-routing-engines>
<other-routing-engine>
<in minutes>
<media (compact-flash | disk)>
<message "text">
```

Syntax (TX Matrix Router)

```
request system halt
<all-lcc | lcc number | scc>
<at time>
<both-routing-engines>
<other-routing-engine>
<in minutes>
<media (compact-flash | disk)>
<message "text">
```

Syntax (TX Matrix Plus Router)

```
request system halt
<all-chassis | all-lcc | lcc number | sfc number>
<at time>
<both-routing-engines>
<other-routing-engine>
<in minutes>
<media (compact-flash | disk)>
<message "text">
```

Syntax (MX Series Router)

```
request system halt
<all-members>
<at time>
<both-routing-engines>
<in minutes>
```

<local>
<media (external | internal)>
<member *member-id*>
<message "*text*">
<other-routing-engine>

Syntax (QFX Series)

request system halt
<all-members>
<at *time*>
<director-device *director-device-id*>
<in *minutes*>
<local>
<media >
<member *member-id*>
<message "*text*">
<slice *slice*>

Release Information

Command introduced before Junos OS Release 7.4.
other-routing-engine option introduced in Junos OS Release 8.0.
Command introduced in Junos OS Release 9.0 for EX Series switches.
sfc option introduced for the TX Matrix Plus router in Junos OS Release 9.6.
Command introduced in Junos OS Release 11.1 for the QFX Series.
director-device option introduced for QFabric systems in Junos OS Release 12.2.

Description

Stop the router or switch software.

NOTE: When you issue this command on an individual component in a QFabric system, you will receive a warning that says "Hardware-based members will halt, Virtual Junos Routing Engines will reboot." If you want to halt only one member of a Node group, use the member option from the Node group CLI. You cannot issue this command from the QFabric CLI.

Options

none—Stop the router or switch software immediately.

all-chassis—(TX Matrix routers and TX Matrix Plus routers only) (Optional) Halt all chassis.

all-lcc—(TX Matrix routers and TX Matrix Plus routers only) (Optional) On a TX Matrix router, halt all T640 routers (or line-card chassis) connected to the TX Matrix router. On a TX Matrix Plus router, halt all T1600 or T4000 routers connected to the TX Matrix Plus router.

all-members—(EX4200 switches and MX Series routers only) (Optional) Halt all members of the Virtual Chassis configuration.

at *time* —(Optional) Time at which to stop the software, specified in one of the following ways:

- **now**—Stop the software immediately. This is the default.
- ***+minutes***—Number of minutes from now to stop the software.

- ***yymmddhhmm***—Absolute time at which to stop the software, specified as year, month, day, hour, and minute.
- ***hh:mm***—Absolute time on the current day at which to stop the software.

both-routing-engines—(Optional) Halt both Routing Engines at the same time.

director-device *director-device-id*—(QFabric systems only) Halt a specific Director device.

lcc *number*—(TX Matrix routers and TX Matrix Plus routers only) (Optional) On a TX Matrix router, halt a specific T640 router that is connected to the TX Matrix router. On a TX Matrix Plus router, halt a specific router that is connected to the TX Matrix Plus router. Replace ***number*** with the following values depending on the LCC configuration:

Replace *number* with the following values depending on the LCC configuration:

- 0 through 3, when T640 routers are connected to a TX Matrix router in a routing matrix.
- 0 through 3, when T1600 routers are connected to a TX Matrix Plus router in a routing matrix.
- 0 through 7, when T1600 routers are connected to a TX Matrix Plus router with 3D SIBs in a routing matrix.
- 0, 2, 4, or 6, when T4000 routers are connected to a TX Matrix Plus router with 3D SIBs in a routing matrix.

local—(EX4200 switches and MX Series routers only) (Optional) Halt the local Virtual Chassis member.

in *minutes*—(Optional) Number of minutes from now to stop the software. This option is an alias for the at *+minutes* option.

media (compact-flash | disk | removable-compact-flash | usb)—(Optional) Boot medium for the next boot. (The options **removable-compact-flash** and **usb** pertain to J Series routers only.)

media (external | internal)—(EX Series and QFX Series switches and MX Series routers only) (Optional) Halt the boot media:

- **external**—Halt the external mass storage device.
- **internal**—Halt the internal flash device.

member *member-id*—(EX4200 switches and MX Series routers only) (Optional) Halt the specified member of the Virtual Chassis configuration. For EX4200 switches, replace ***member-id*** with a value from 0 through 9. For an MX Series Virtual Chassis, replace ***member-id*** with a value of 0 or 1.

message "*text*"—(Optional) Message to display to all system users before stopping the software.

other-routing-engine—(Optional) Halt the other Routing Engine from which the command is issued. For example, if you issue the command from the master Routing Engine, the backup Routing Engine is halted. Similarly, if you issue the command from the backup Routing Engine, the master Routing Engine is halted.

scc—(TX Matrix routers only) (Optional) Halt the TX Matrix router (or switch-card chassis).

sfc ***number***—(TX Matrix Plus routers only) (Optional) Halt the TX Matrix Plus router (or switch-fabric chassis). Replace *number* with 0.

slice ***slice***—(EX Series and QFX Series switches only) (Optional) Halt a partition on the boot media. This option has the following suboptions:

- 1—Halt partition 1.
- 2—Halt partition 2.
- **alternate**—Reboot from the alternate partition.

Additional Information

On the M7i router, the **request system halt** command does not immediately power down the Packet Forwarding Engine. The power-down process can take as long as 5 minutes.

On a TX Matrix router and TX Matrix Plus router if you issue the **request system halt** command on the master Routing Engine, all the master Routing Engines connected to the routing matrix are halted. If you issue this command on the backup Routing Engine, all the backup Routing Engines connected to the routing matrix are halted.

NOTE: If you have a router or switch with two Routing Engines and you want to shut the power off to the router or switch or remove a Routing Engine, you must first halt the backup Routing Engine (if it has been upgraded), and then halt the master Routing Engine. To halt a Routing Engine, issue the **request system halt** command. You can also halt both Routing Engines at the same time by issuing the **request system halt both-routing-engines** command.

Required Privilege Level

maintenance

Related Documentation

- clear system reboot on page 177
- request system power-off on page 199
- Rebooting and Halting a QFX Series Product
- *Routing Matrix with a TX Matrix Plus Router Solutions Page*

List of Sample Output

request system halt on page 190
request system halt (In 2 Hours) on page 190
request system halt (Immediately) on page 190
request system halt (At 1:20 AM) on page 190

Output Fields When you enter this command, you are provided feedback on the status of your request.

Sample Output

request system halt

```
user@host> request system halt
Halt the system ? [yes,no] (no) yes

*** FINAL System shutdown message from root@section2 ***
System going down IMMEDIATELY
Terminated
...
syncing disks... 11 8 done
The operating system has halted.
Please press any key to reboot.
```

request system halt (In 2 Hours)

The following example, which assumes that the time is 5 PM (1700), illustrates three different ways to request that the system stop 2 hours from now:

```
user@host> request system halt at +120
user@host> request system halt in 120
user@host> request system halt at 19:00
```

request system halt (Immediately)

```
user@host> request system halt at now
```

request system halt (At 1:20 AM)

To stop the system at 1:20 AM, enter the following command. Because 1:20 AM is the next day, you must specify the absolute time.

```
user@host> request system halt at yymmdd120
request system halt at 120
Halt the system at 120? [yes,no] (no) yes
```

request system license add

Syntax request system license add (*filename* | terminal)

Release Information Command introduced before Junos OS Release 7.4.
Command introduced in Junos OS Release 9.0 for EX Series switches.
Command introduced in Junos OS Release 11.1 for the QFX Series.

Description Add a license key.

Options ***filename***—License key from a file or URL. Specify the filename or the URL where the key is located.

terminal—License key from the terminal.

Required Privilege Level maintenance

Related Documentation
- Adding New Licenses (CLI Procedure)

List of Sample Output request system license add on page 191

Output Fields When you enter this command, you are provided feedback on the status of your request.

Sample Output

request system license add

```
user@host> request system license add terminal
```

request system license delete

Syntax request system license delete *license-id*

Syntax (QFX Series) request system license delete *license-identifier*

Release Information Command introduced before Junos OS Release 7.4.
Command introduced in Junos OS Release 9.0 for EX Series switches.
Command introduced in Junos OS Release 11.1 for the QFX Series.

Description Delete a license key. You can delete only one license at a time.

Options ***license-id***—License ID that uniquely identifies a license key.

license-identification—(QFX Series) License ID that uniquely identifies a license key.

Required Privilege Level maintenance

Related Documentation
- Deleting a License (CLI Procedure)

List of Sample Output request system license delete on page 192

Output Fields When you enter this command, you are provided feedback on the status of your request.

Sample Output

request system license delete

```
user@host> request system license delete G03000002223
```

request system license save

Syntax request system license save (*filename* | terminal)

Release Information Command introduced before Junos OS Release 7.4.
Command introduced in Junos OS Release 9.0 for EX Series switches.
Command introduced in Junos OS Release 11.1 for the QFX Series.

Description Save installed license keys to a file or URL.

Options ***filename***—License key from a file or URL. Specify the filename or the URL where the key is located.

terminal—License key from the terminal.

Required Privilege Level maintenance

Related Documentation
- Saving License Keys

List of Sample Output request system license save on page 193

Output Fields When you enter this command, you are provided feedback on the status of your request.

Sample Output

request system license save

```
user@host> request system license save ftp://user@host/license.conf
```

request system logout

Syntax

request system logout (pid *pid* | terminal *terminal* | user *username*)
<all>

Release Information

Command introduced before Junos OS Release 7.4.
Command introduced in Junos OS Release 9.0 for EX Series switches.
Command introduced in Junos OS Release 11.1 for the QFX Series.

Description

Log out users from the router or switch and the configuration database. If a user held the **configure exclusive** lock, this command clears the exclusive lock.

Options

all—(Optional) Log out all sessions owned by a particular PID, terminal session, or user. (On a TX Matrix or TX Matrix Plus router, this command is broadcast to all chassis.)

pid ***pid***—Log out the user session using the specified management process identifier (PID). The PID type must be management process.

terminal ***terminal***—Log out the user for the specified terminal session.

user ***username***—Log out the specified user.

Required Privilege Level

configure

Related Documentation

- Junos OS System Basics Configuration Guide

List of Sample Output

request system logout on page 194

Output Fields

When you enter this command, you are provided feedback on the status of your request.

Sample Output

request system logout

```
user@host> request system logout user tammy all
Connection closed by foreign host.
```

request system partition abort

Syntax

request system partition abort

Syntax (TX Matrix Router)

request system partition abort
<all-chassis | all-lcc | lcc *number* | scc>

Syntax (TX Matrix Plus Router)

request system partition abort
<all-chassis | all-lcc | lcc *number* | sfc *number*>

Syntax (MX Series Router)

request system partition abort
<all-members>
<local>
<member *member-id*>

Release Information

Command introduced before Junos OS Release 7.4.
sfc option introduced for the TX Matrix Plus router in Junos OS Release 9.6.

Description

Terminate a previously scheduled storage media partition operation. If the command is issued between the time of a partition request and a reboot, the partition request is aborted and the storage media is not affected.

Options

all-chassis—(TX Matrix and TX Matrix Plus routers only) (Optional) Abort a previously scheduled partition operation for all chassis.

all-lcc—(TX Matrix and TX Matrix Plus routers only) (Optional) On a TX Matrix router, abort a previously scheduled partition operation on all T640 routers (or line-card chassis) connected to the TX Matrix router. On a TX Matrix Plus router, abort a previously scheduled partition operation on all T1600 routers (or line-card chassis) connected to the TX Matrix Plus router.

all-members—(MX Series routers only) (Optional) Abort a previously scheduled partition operation for all members of the Virtual Chassis configuration.

lcc *number*—(TX Matrix and TX Matrix Plus routers only) (Optional) On a TX Matrix Plus router, abort a previously scheduled partition operation on a specific T640 router that is connected to the TX Matrix router. On a TX Matrix Plus router, abort a previously scheduled partition operation on a specific T1600 router that is connected to the TX Matrix Plus router. Replace ***number*** with a value from 0 through 3.

local—(MX Series routers only) (Optional) Abort a previously scheduled partition operation for the local Virtual Chassis member.

member *member-id*—(MX Series routers only) (Optional) Abort a previously scheduled partition operation for the specified member of the Virtual Chassis configuration. Replace ***member-id*** with a value of 0 or 1.

scc—(TX Matrix routers only) (Optional) Abort a previously scheduled partition operation on the TX Matrix router (or switch-card chassis).

sfc *number*—(TX Matrix Plus routers only) (Optional) Abort a previously scheduled partition operation on the TX Matrix Plus router (or switch-fabric chassis). Replace *number* with 0.

Required Privilege Level maintenance

Related Documentation
- request system partition hard-disk on page 197

List of Sample Output request system partition abort on page 196

Output Fields When you enter this command, you are provided feedback on the status of your request.

Sample Output

request system partition abort

```
user@host> request system partition abort
The hard disk is no longer scheduled to be partitioned.
```


request system partition hard-disk

Syntax

request system partition hard-disk

Syntax (TX Matrix Router)

request system partition hard-disk
<all-chassis | all-lcc | lcc *number* | scc>

Syntax (TX Matrix Plus Router)

request system partition hard-disk
<all-chassis | all-lcc | lcc *number* | sfc *number*>

Syntax (MX Series Router)

request system partition hard-disk
<all-members>
<local>
<member *member-id*>

Release Information

Command introduced before Junos OS Release 7.4.
sfc option introduced for the TX Matrix Plus router in Junos OS Release 9.6.

Description

Set up the hard disk for partitioning. After this command is issued, the hard disk is partitioned the next time the system is rebooted. When the hard disk is partitioned, the contents of **/altroot** and **/altconfig** are saved and restored. All other data on the hard disk is at risk of being lost.

Options

all-chassis—(TX Matrix routers and TX Matrix Plus routers only) (Optional) Schedule a partition of the hard disk for all routers in the chassis at its next reboot.

all-lcc—(TX Matrix and TX Matrix Plus routers only) (Optional) On a TX Matrix router, schedule a partition of the hard disk on all T640 routers connected to the TX Matrix router at their next reboot. On a TX Matrix Plus router, schedule a partition of the hard disk on all connected LCCs.

all-members—(MX Series routers only) (Optional) Schedule a partition of the hard disk for all members of the Virtual Chassis configuration.

lcc *number*—(TX Matrix routers and TX Matrix Plus routers only) (Optional) On a TX Matrix Plus router, schedule a partition of the hard disk on a specific T640 router connected to the TX Matrix router. On a TX Matrix Plus router, schedule a partition of the hard disk on a specific router that is connected to the TX Matrix Plus router.

Replace *number* with the following values depending on the LCC configuration:

- 0 through 3, when T640 routers are connected to a TX Matrix router in a routing matrix.
- 0 through 3, when T1600 routers are connected to a TX Matrix Plus router in a routing matrix.
- 0 through 7, when T1600 routers are connected to a TX Matrix Plus router with 3D SIBs in a routing matrix.
- 0, 2, 4, or 6, when T4000 routers are connected to a TX Matrix Plus router with 3D SIBs in a routing matrix.

local—(MX Series routers only) (Optional) Schedule a partition of the hard disk for the local member of the Virtual Chassis.

member ***member-id***—(MX Series routers only) (Optional) Schedule a partition of the hard disk for the specified member of the Virtual Chassis configuration. Replace ***member-id*** with a value of 0 or 1.

scc—(TX Matrix routers only) (Optional) Schedule a partition of the hard disk on the T640 router connected to the TX Matrix router (or switch-card chassis).

sfc ***number***—(TX Matrix Plus routersonly) (Optional) Schedule a partition of the hard disk on the connected T1600 or T4000 LCCs connected to the TX Matrix Plus router . Replace ***number*** with 0.

Additional Information

To immediately partition the hard disk, use the **request system reboot** command. To cancel the partition request, use the **request system partition abort** command.

Required Privilege Level

maintenance

Related Documentation

- request system partition abort on page 195
- *Routing Matrix with a TX Matrix Plus Router Solutions Page*

List of Sample Output

request system partition hard-disk on page 198

Output Fields

When you enter this command, you are provided feedback on the status of your request.

Sample Output

request system partition hard-disk

```
user@host> request system partition hard-disk
WARNING:   The hard disk is about to be partitioned.  The contents
WARNING:   of /altroot and /altconfig will be saved and restored.
WARNING:   All other data is at risk.  This is the setup stage, the
WARNING:   partition happens during the next reboot.

Setting up to partition the hard disk ...

WARNING:   A REBOOT IS REQUIRED TO PARTITION THE HARD DISK.  Use the
WARNING:   'request system reboot' command when you are ready to proceed
WARNING:   with the partitioning.  To abort the partition of the hard disk
WARNING:   use the 'request system partition abort' command.
```

request system power-off

Syntax

```
request system power-off
<both-routing-engines>
<other-routing-engine>
<at time>
<in minutes>
<media (compact-flash | disk | removable-compact-flash | usb)>
<message "text">
```

Syntax (EX Series Switches)

```
request system power-off
<all-members>
<at time>
<both-routing-engines>
<in minutes>
<local>
<media (external | internal)>
<member member-id>
<message "text">
<other-routing-engine>
<slice slice>
```

Syntax (TX Matrix Router)

```
request system power-off
<all-chassis | all-lcc | lcc number |  scc>
<both-routing-engines>
<other-routing-engine>
<at time>
<in minutes>
<media (compact-flash | disk)>
<message "text">
```

Syntax (TX Matrix Plus Router)

```
request system power-off
<all-chassis | all-lcc | lcc number |  sfc number>
<both-routing-engines>
<other-routing-engine>
<at time>
<in minutes>
<media (compact-flash | disk)>
<message "text">
```

Syntax (MX Series Router)

```
request system power-off
<all-members>
<at time>
<both-routing-engines>
<in minutes>
<local>
<media (external | internal)>
<member member-id>
<message "text">
<other-routing-engine>
```

Syntax (QFX Series)

```
request system power-off
<at time>
```

<in *minutes*>
<media (external | internal)>
<message "*text*">
<slice *slice*>

Release Information Command introduced in Junos OS Release 8.0.
Command introduced in Junos OS Release 9.0 for EX Series switches.
Command introduced in Junos OS Release 11.1 for the QFX Series.

Description Power off the software.

NOTE: When you issue this command on an individual component in a QFabric system, you will receive a warning that says "Hardware-based members will halt, Virtual Junos Routing Engines will reboot." If you want to halt only one member, use the member option. You cannot issue this command from the QFabric CLI.

Options **none**—Power off the router or switch software immediately.

all-chassis—(Optional) (TX Matrix and TX Matrix Plus router only) Power off all Routing Engines in the chassis.

all-lcc—(Optional) (TX Matrix and TX Matrix Plus router only) On a TX Matrix router, power off all T640 routers (or line-card chassis) connected to the TX Matrix router. On a TX Matrix Plus router, power off all T1600 routers (or line-card chassis) connected to the TX Matrix Plus router.

all-members—(EX4200 switches and MX Series routers only) (Optional) Power off all members of the Virtual Chassis configuration.

at *time*—(Optional) Time at which to power off the software, specified in one of the following ways:

- **now**—Power off the software immediately. This is the default.
- ***+minutes***—Number of minutes from now to power off the software.
- ***yymmddhhmm***—Absolute time at which to power off the software, specified as year, month, day, hour, and minute.
- ***hh:mm***—Absolute time on the current day at which to power off the software.

both-routing-engines—(Optional) Power off both Routing Engines at the same time.

in *minutes*—(Optional) Number of minutes from now to power off the software. This option is an alias for the **at +*minutes*** option.

lcc *number*—(Optional) (TX Matrix and TX Matrix Plus router only) On a TX Matrix router, power off a T640 router that is connected to the TX Matrix router. On a TX Matrix Plus router, power off a T1600 router that is connected to the TX Matrix Plus router. Replace ***number*** with a value from 0 through 3.

local—(EX4200 switches and MX Series routers only) (Optional) Power off the local Virtual Chassis member.

media (compact-flash | disk | removable-compact-flash | usb)—(Optional) Boot medium for the next boot. (The options **removable-compact-flash** and **usb** pertain to the J Series routers only.)

media (external | internal)—(EX Series and QFX Series switches and MX Series routers only) (Optional) Power off the boot media:

- **external**—Power off the external mass storage device.
- **internal**—Power off the internal flash device.

member ***member-id***—(EX4200 switches and MX Series routers only) (Optional) Power off the specified member of the Virtual Chassis configuration. For EX4200 switches, replace ***member-id*** with a value from 0 through 9. For an MX Series Virtual Chassis, replace ***member-id*** with a value of 0 or 1.

message "*text*"—(Optional) Message to display to all system users before powering off the software.

other-routing-engine—(Optional) Power off the other Routing Engine from which the command is issued. For example, if you issue the command from the master Routing Engine, the backup Routing Engine is halted. Similarly, if you issue the command from the backup Routing Engine, the master Routing Engine is halted.

scc—(Optional) (TX Matrix router only) Power off only the master Routing Engine or the backup Routing Engine on the TX Matrix router (or switch-card chassis). If you issue the command from the master Routing Engine, the master SCC is powered off. If you issue the command from the backup Routing Engine, the backup SCC is powered off.

sfc ***number***—(Optional) (TX Matrix Plus router only) Power off only the master Routing Engine or the backup Routing Engine on the TX Matrix Plus router (or switch-fabric chassis). If you issue the command from the master Routing Engine, the master SFC is powered off. If you issue the command from the backup Routing Engine, the backup SFC is powered off. Replace *number* with zero.

slice ***slice***—(EX Series and QFX Series switches only) (Optional) Power off a partition on the boot media. This option has the following suboptions:

- **1**—Power off partition 1.
- **2**—Power off partition 2.
- **alternate**—Reboot from the alternate partition.

Additional Information

On a routing matrix composed of a TX Matrix router and T640 routers, if you issue the **request system power-off** command on the TX Matrix master Routing Engine, all the master Routing Engines connected to the routing matrix are powered off. If you issue this command on the backup Routing Engine, all the backup Routing Engines connected to the routing matrix are powered off.

Likewise, on a routing matrix composed of a TX Matrix Plus router and T1600 routers, if you issue the **request system power-off** command on the TX Matrix Plus master Routing Engine, all the master Routing Engines connected to the routing matrix are powered off. If you issue this command on the backup Routing Engine, all the backup Routing Engines connected to the routing matrix are powered off.

If you issue the **request system power-off both-routing-engines** command on the TX Matrix or TX Matrix Plus router, all the Routing Engines on the routing matrix are powered off.

Required Privilege Level maintenance

List of Sample Output request system power-off on page 202

Output Fields When you enter this command, you are provided feedback on the status of your request.

Sample Output

request system power-off

```
user@host> request system power-off message "This router will be powered off in 30 minutes.
Please save your data and log out immediately."
warning: This command will not halt the other routing-engine.
If planning to switch off power, use the both-routing-engines option.
Power Off the system ? [yes,no] (no) yes

*** FINAL System shutdown message from remote@nutmeg ***
System going down IMMEDIATELY

This router will be powered off in 30 minutes. Please save your data and log out
immediately.

Shutdown NOW!
[pid 5177]
```


request system reboot

Syntax

```
request system reboot
<at time>
<both-routing-engines>
<in minutes>
<media (compact-flash | disk | removable-compact-flash | usb)>
<message "text">
<other-routing-engine>
```

Syntax (EX Series Switches)

```
request system reboot
<all-members>
<at time>
<both-routing-engines>
<in minutes>
<local>
<media (external | internal)>
<member member-id>
<message "text">
<other-routing-engine>
<slice slice>
```

Syntax (TX Matrix Router)

```
request system reboot
<all-chassis | all-lcc | lcc number |  scc>
<at time>
<both-routing-engines>
<in minutes>
<media (compact-flash | disk)>
<message "text">
<other-routing-engine>
```

Syntax (TX Matrix Plus Router)

```
request system reboot
<all-chassis | all-lcc | lcc number | sfc number>
<at time>
<both-routing-engines>
<in minutes>
<media (compact-flash | disk)>
<message "text">
<other-routing-engine>
<partition (1 | 2 | alternate)>
```

Syntax (MX Series Router)

```
request system reboot
<all-members>
<at time>
<both-routing-engines>
<in minutes>
<local>
<media (external | internal)>
<member member-id>
<message "text">
<other-routing-engine>
```

Release Information

Command introduced before Junos OS Release 7.4.

Option **other-routing-engine** introduced in Junos OS Release 8.0.
Command introduced in Junos OS Release 9.0 for EX Series switches.
Option **sfc** introduced for the TX Matrix Plus router in Junos OS Release 9.6.
Option **both-routing-engines** introduced in Junos OS Release 12.1.

Description Reboot the software.

Options **none**—Reboot the software immediately.

all-chassis—(TX Matrix routers and TX Matrix Plus routers only) (Optional) On a TX Matrix router or TX Matrix Plus router, reboot all routers connected to the TX Matrix or TX Matrix Plus router, respectively.

all-lcc—(TX Matrix routers andTX Matrix Plus routers only) (Optional) On a TX Matrix router or TX Matrix Plus router, reboot all line card chassis connected to the TX Matrix or TX Matrix Plus router, respectively.

all-members—(EX4200 switches and MX Series routers only) (Optional) Reboot the software on all members of the Virtual Chassis configuration.

at *time*—(Optional) Time at which to reboot the software, specified in one of the following ways:

- **now**—Stop or reboot the software immediately. This is the default.
- ***+minutes***—Number of minutes from now to reboot the software.
- ***yymmddhhmm***—Absolute time at which to reboot the software, specified as year, month, day, hour, and minute.
- ***hh:mm***—Absolute time on the current day at which to stop the software, specified in 24-hour time.

both-routing-engines—(Optional) Reboot both Routing Engines at the same time.

in *minutes*—(Optional) Number of minutes from now to reboot the software. This option is an alias for the **at *+minutes*** option.

lcc *number*——(TX Matrix routers and TX Matrix Plus routers only) (Optional) Line-card chassis number.

Replace *number* with the following values depending on the LCC configuration:

- 0 through 3, when T640 routers are connected to a TX Matrix router in a routing matrix.
- 0 through 3, when T1600 routers are connected to a TX Matrix Plus router in a routing matrix.
- 0 through 7, when T1600 routers are connected to a TX Matrix Plus router with 3D SIBs in a routing matrix.
- 0, 2, 4, or 6, when T4000 routers are connected to a TX Matrix Plus router with 3D SIBs in a routing matrix.

local—(EX4200 switches and MX Series routers only) (Optional) Reboot the software on the local Virtual Chassis member.

media (compact-flash | disk | removable-compact-flash | usb)—(Optional) Boot medium for next boot. (The options **removable-compact-flash** and **usb** pertain to the J Series routers only.)

media (external | internal)—(EX Series switches and MX Series routers only) (Optional) Reboot the boot media:

- **external**—Reboot the external mass storage device.
- **internal**—Reboot the internal flash device.

member ***member-id***—(EX4200 switches and MX Series routers only) (Optional) Reboot the software on the specified member of the Virtual Chassis configuration. For EX4200 switches, replace ***member-id*** with a value from 0 through 9. For an MX Series Virtual Chassis, replace ***member-id*** with a value of 0 or 1.

message "*text*"—(Optional) Message to display to all system users before stopping or rebooting the software.

other-routing-engine—(Optional) Reboot the other Routing Engine from which the command is issued. For example, if you issue the command from the master Routing Engine, the backup Routing Engine is rebooted. Similarly, if you issue the command from the backup Routing Engine, the master Routing Engine is rebooted.

partition—(TX Matrix Plus routers only) (Optional) Reboot using the specified partition on the boot media. This option has the following suboptions:

- **1**—Reboot from partition 1.
- **2**—Reboot from partition 2.
- **alternate**—Reboot from the alternate partition.

scc—(TX Matrix routers only) (Optional) Reboot the Routing Engine on the TX Matrix switch-card chassis. If you issue the command from re0, re0 is rebooted. If you issue the command from re1, re1 is rebooted.

sfc ***number***—(TX Matrix Plus routers only) (Optional) Reboot the Routing Engine on the TX Matrix Plus switch-fabric chassis. If you issue the command from re0, re0 is rebooted. If you issue the command from re1, re1 is rebooted. Replace *number* with 0.

slice ***slice***—(EX Series switches only) (Optional) Reboot a partition on the boot media. This option has the following suboptions:

- **1**—Power off partition 1.
- **2**—Power off partition 2.
- **alternate**—Reboot from the alternate partition.

Additional Information

Reboot requests are recorded in the system log files, which you can view with the **show log** command (see show log). Also, the names of any running processes that are scheduled to be shut down are changed. You can view the process names with the **show system processes** command (see show system processes).

On a TX Matrix or TX Matrix Plus router, if you issue the **request system reboot** command on the master Routing Engine, all the master Routing Engines connected to the routing matrix are rebooted. If you issue this command on the backup Routing Engine, all the backup Routing Engines connected to the routing matrix are rebooted.

NOTE: Before issuing the **request system reboot** command on a TX Matrix Plus router with no options or the **all-chassis**, **all-lcc**, **lcc** *number*, or **sfc** options, verify that master Routing Engine for all routers in the routing matrix are in the same slot number. If the master Routing Engine for a line-card chassis is in a different slot number than the master Routing Engine for a TX Matrix Plus router, the line-card chassis might become logically disconnected from the routing matrix after the **request system reboot** command.

NOTE: To reboot a router that has two Routing Engines, reboot the backup Routing Engine (if you have upgraded it) first, and then reboot the master Routing Engine.

Required Privilege Level

maintenance

Related Documentation

- clear system reboot on page 177
- request system halt on page 185
- request system reboot
- Rebooting and Halting a QFX Series Product
- *Routing Matrix with a TX Matrix Plus Router Solutions Page*

List of Sample Output

Output Fields

When you enter this command, you are provided feedback on the status of your request.

Sample Output

request system reboot

```
user@host> request system reboot
Reboot the system ? [yes,no] (no)
```

request system reboot (at 2300)

```
user@host> request system reboot at 2300 message ?Maintenance time!?
Reboot the system ? [yes,no] (no) yes

shutdown: [pid 186]
*** System shutdown message from root@berry.network.net ***
System going down at 23:00
```

request system reboot (in 2 Hours)

The following example, which assumes that the time is 5 PM (17:00), illustrates three different ways to request the system to reboot in two hours:

```
user@host> request system reboot at +120
user@host> request system reboot in 120
user@host> request system reboot at 19:00
```

request system reboot (Immediately)

```
user@host> request system reboot at now
```

request system reboot (at 1:20 AM)

To reboot the system at 1:20 AM, enter the following command. Because 1:20 AM is the next day, you must specify the absolute time.

```
user@host> request system reboot at 06060120
request system reboot at 120
Reboot the system at 120? [yes,no] (no) yes
```

request system snapshot

Syntax

request system snapshot
<partition>

Syntax (ACX Series Routers)

request system snapshot
<media *type*>
<partition>

Syntax (EX Series Switches)

request system snapshot
<all-members | local | member *member-id*>
<media *type*>
<partition>
<re0 | re1 | routing-engine *routing-engine-id*>
<slice alternate>

Syntax (J Series Routers)

request system snapshot
<as-primary>
<config-size *size*>
<data-size *size*>
<factory>
<media *type*>
<partition>
<root-size *size*>
<swap-size *size*>

Syntax (MX Series Routers)

request system snapshot
<all-members>
<config-partition>
<local>
<member *member-id*>
<partition>
<root-partition>

Syntax (TX Matrix Routers)

request system snapshot
<all-chassis | all-lcc | lcc *number* | scc>
<config-partition>
<partition>
<root-partition>

Syntax (TX Matrix Plus Routers)

request system snapshot
<all-chassis | all-lcc | lcc *number* | sfc *number*>
<config-partition>
<partition>
<root-partition>

Release Information

Command introduced before Junos OS Release 7.4.
Command introduced in Junos OS Release 10.0 for EX Series switches.
Command introduced in Junos OS Release 12.2 for ACX Series switches.
Options **<config-partition>** and **<root-partition>** introduced in Junos OS Release 13.1 for M, MX, T, TX Series switches.

Description

- On the router, back up the currently running and active file system partitions to standby partitions that are not running. Specifically, the root file system (/) is backed up to **/altroot**, and **/config** is backed up to **/altconfig**. The root and **/config** file systems are on the router's flash drive, and the **/altroot** and **/altconfig** file systems are on the router's hard drive.
- On the switch, take a snapshot of the files currently used to run the switch—the complete contents of the root (/) , **/altroot**, **/config**, **/var**, and **/var-tmp** directories, which include the running Junos OS, the active configuration, and log files.

CAUTION: **After you run the request system snapshot command, you cannot return to the previous version of the software, because the running and backup copies of the software are identical.**

Options The specific options available depend upon the router or switch:

none—Back up the currently running software as follows:

- On the router, back up the currently running and active file system partitions to standby partitions that are not running. Specifically, the root file system (/) is backed up to **/altroot**, and **/config** is backed up to **/altconfig**. The root and **/config** file systems are on the router's flash drive, and the **/altroot** and **/altconfig** file systems are on the router's hard drive.
- On the switch, take a snapshot of the files currently used to run the switch and copy them to the media that the switch did not boot from. If the switch is booted from internal media, the snapshot is copied to external (USB) media. If the switch is booted from external (USB) media, the snapshot is copied to internal media.
  - If the snapshot destination is external media but a USB flash drive is not connected, an error message is displayed.
  - If the automatic snapshot procedure is already in progress, the command returns the following error: **Snapshot already in progress. Cannot start manual snapshot.** For additional information about the automatic snapshot feature, see Understanding Resilient Dual-Root Partitions on Switches.

all-chassis | all-lcc | lcc *number* —(TX Matrix and TX Matrix Plus router only) (Optional)

- **all-chassis**—On a TX Matrix router, archive data and executable areas for all Routing Engines in the chassis. On a TX Matrix Plus router, archive data and executable areas for all Routing Engines in the chassis.
- **all-lcc**—On a TX Matrix router, archive data and executable areas for all T640 routers (or line-card chassis) connected to a TX Matrix router. On a TX Matrix Plus router, archive data and executable areas for all routers (or line-card chassis) connected to a TX Matrix Plus router.
- **lcc *number***—On a TX Matrix router, archive data and executable areas for a specific T640 router (or line-card chassis) that is connected to a TX Matrix router. On a

TX Matrix Plus router, archive data and executable areas for a specific router (line-card chassis) that is connected to a TX Matrix Plus router.

Replace *number* with the following values depending on the LCC configuration:

- 0 through 3, when T640 routers are connected to a TX Matrix router in a routing matrix.
- 0 through 3, when T1600 routers are connected to a TX Matrix Plus router in a routing matrix.
- 0 through 7, when T1600 routers are connected to a TX Matrix Plus router with 3D SIBs in a routing matrix.
- 0, 2, 4, or 6, when T4000 routers are connected to a TX Matrix Plus router with 3D SIBs in a routing matrix.

all-members | local | member *member-id*—(EX Series switch Virtual Chassis and MX Series routers only) (Optional) Specify where to place the snapshot (archive data and executable areas) in a Virtual Chassis:

- **all-members**—Create a snapshot (archive data and executable areas) for all members of the Virtual Chassis.
- **local**—Create a snapshot (archive data and executable areas) on the member of the Virtual Chassis that you are currently logged into.
- **member *member-id***—Create a snapshot (archive data and executable areas) for the specified member of the Virtual Chassis.

as-primary—(J Series routers only) (Optional) Create a snapshot that can be used to replace the medium in the primary compact flash drive. This option can be used on the removable compact flash only. The option copies the default files that were loaded on the primary compact flash drive when it was shipped from the factory, plus the rescue configuration if one has been set. This option is useful if you have multiple routers and want to use the same software and configuration on each router. After a boot device is created as a primary compact flash drive, it can operate in only a primary compact flash drive slot. This option causes the boot medium to be partitioned.

config-partition—(M, MX, T, TX Series routers only) Create a snapshot of the configuration partition only and store it onto the default **/altconfig** on the hard disk device or an **/altconfig** on a USB device.

config-size *size*—(J Series routers only) (Optional) Specify the size of the config partition, in megabytes. The default value is 10 percent of physical memory on the boot partition. The config partition is mounted on **/config**, and the configuration files are stored in this partition. This option causes the boot medium to be partitioned.

data-size *size*—(J Series routers only) (Optional) Specify the size of the data partition, in megabytes. The default value is 0 MB. The data partition is mounted on **/data**. This space is not used by the router, and can be used for extra storage. This option causes the boot medium to be partitioned.

factory—(J Series routers only) (Optional) Copy only default files that were loaded on the primary compact flash drive when it was shipped from the factory, plus the rescue configuration if one has been set. After the boot medium is created with the factory option, it can operate in only the primary compact flash drive.

media ***type***—(J Series routers and EX Series switches only)(Optional) Specify the boot device the software is copied to:

- **compact-flash**—Copy software to the primary compact flash drive.
- **external**—(Switches only) Copy software to an external mass storage device, such as a USB flash drive. If a USB drive is not connected, the switch displays an error message.
- **internal**—(Switches only) Copy software to an internal flash drive.
- **removable-compact-flash**—Copy software to the removable compact flash drive.
- **usb**—(ACX Series, M320, T640, MX960, and J Series routers only) Copy software to the device connected to the USB port.

partition—(Optional) Repartition the flash drive before a snapshot occurs. If the partition table on the flash drive is corrupted, the **request system snapshot** command fails and reports errors. The partition option is only supported for restoring the software image from the hard drive to the flash drive.

(Routers only) You cannot issue the request system snapshot command when you enable flash disk mirroring. We recommend that you disable flash disk mirroring when you upgrade or downgrade the software. For more information, see the Junos OS System Basics Configuration Guide.

(EX Series switches only) If the snapshot destination is the media that the switch did not boot from, you must use the **partition** option.

re0 | re1 | routing-engine ***routing-engine-id***—(EX6200 and EX8200 switches only) Specify where to place the snapshot in a redundant Routing Engine configuration.

- **re0**—Create a snapshot on Routing Engine 0.
- **re1**—Create a snapshot on Routing Engine 1.
- **routing-engine** *routing-engine-id*—Create a snapshot on the specified Routing Engine.

root-partition—(M, MX, T, TX Series routers only) Create a snapshot of the root partition only and store it onto the default **/altroot** on the hard disk device or an **/altroot** on a USB device.

root-size ***size***—(J Series routers only) (Optional) Specify the size of the root partition, in megabytes. The default value is one-third of the physical memory minus the config, data, and swap partitions. The root partition is mounted on / and does not include configuration files. This option causes the boot medium to be partitioned.

slice alternate—(EX Series switches only) (Optional) Take a snapshot of the active root partition and copy it to the alternate slice on the boot media.

scc—(TX Matrix router only) (Optional) Archive data and executable areas for a TX Matrix router (or switch-card chassis).

sfc *number*—(TX Matrix Plus router only) (Optional) Archive data and executable areas for a TX Matrix Plus router (or switch-fabric chassis). Replace *number* with 0.

swap-size *size*—(J Series router only) (Optional) Specify the size of the swap partition, in megabytes. The default value is one-third of the physical memory on a boot medium larger than 128 MB, or 0 MB on a smaller boot device. The swap partition is used for swap files and software failure memory snapshots. Software failure memory snapshots are saved to the boot medium only if it is specified as the dump device in the system dump-device configuration hierarchy. This option causes the boot medium to be partitioned.

Additional Information

- (Routers only) Before upgrading the software on the router, when you have a known stable system, issue the **request system snapshot** command to back up the software, including the configuration, to the **/altroot** and **/altconfig** file systems. After you have upgraded the software on the router and are satisfied that the new packages are successfully installed and running, issue the **request system snapshot** command again to back up the new software to the **/altroot** and **/altconfig** file systems.
- (Routers only) You cannot issue the **request system snapshot** command when you enable flash disk mirroring. We recommend that you disable flash disk mirroring when you upgrade or downgrade the software. For more information, see the Junos OS System Basics Configuration Guide
- (TX Matrix and TX Matrix Plus router only) On a routing matrix, if you issue the **request system snapshot** command on the master Routing Engine, all the master Routing Engines connected to the routing matrix are backed up. If you issue this command on the backup Routing Engine, all the backup Routing Engines connected to the routing matrix are backed up.

Required Privilege Level

maintenance

Related Documentation

- show system snapshot on page 278
- show system auto-snapshot

List of Sample Output

request system snapshot (Routers) on page 213
request system snapshot (EX Series Switches) on page 213
request system snapshot (When the Partition Flag Is On) on page 213
request system snapshot (When Mirroring Is Enabled) on page 213
request system snapshot all-lcc (Routing Matrix) on page 213
request system snapshot all-members (Virtual Chassis) on page 213

Output Fields

When you enter this command, you are provided feedback on the status of your request.

Sample Output

request system snapshot (Routers)

```
user@host> request system snapshot
umount: /altroot: not currently mounted
Copying / to /altroot.. (this may take a few minutes)
umount: /altconfig: not currently mounted
Copying /config to /altconfig.. (this may take a few minutes)

The following filesystems were archived: / /config
```

request system snapshot (EX Series Switches)

```
user@switch> request system snapshot partition
Clearing current label...
Partitioning external media (/dev/da1) ...
Partitions on snapshot:

  Partition  Mountpoint  Size    Snapshot argument
      s1a    /altroot    179M    none
      s2a    /           180M    none
      s3d    /var/tmp    361M    none
      s3e    /var        121M    none
      s4d    /config     60M     none
Copying '/dev/da0s1a' to '/dev/da1s1a' .. (this may take a few minutes)
Copying '/dev/da0s2a' to '/dev/da1s2a' .. (this may take a few minutes)
Copying '/dev/da0s3d' to '/dev/da1s3d' .. (this may take a few minutes)
Copying '/dev/da0s3e' to '/dev/da1s3e' .. (this may take a few minutes)
Copying '/dev/da0s4d' to '/dev/da1s4d' .. (this may take a few minutes)
The following filesystems were archived: /altroot / /var/tmp /var /config
```

request system snapshot (When the Partition Flag Is On)

```
user@host> request system snapshot partition
Performing preliminary partition checks ...
Partitioning ad0 ...
umount: /altroot: not currently mounted
Copying / to /altroot.. (this may take a few minutes)

The following filesystems were archived: / /config
```

request system snapshot (When Mirroring Is Enabled)

```
user@host> request system snapshot
Snapshot is not possible since mirror-flash-on-disk is configured.
```

request system snapshot all-lcc (Routing Matrix)

```
user@host> request system snapshot all-lcc
lcc0-re0:
--------------------------------------------------------------------------
Copying '/' to '/altroot' .. (this may take a few minutes)
Copying '/config' to '/altconfig' .. (this may take a few minutes)
The following filesystems were archived: / /config

lcc2-re0:
--------------------------------------------------------------------------
Copying '/' to '/altroot' .. (this may take a few minutes)
Copying '/config' to '/altconfig' .. (this may take a few minutes)
The following filesystems were archived: / /config
```

request system

```
user@switch> request system snapshot all-members media internal
fpc0:
```

snapshot all-members (Virtual Chassis)

```
--------------------------------------------------------------------------
Copying '/dev/da0s2a' to '/dev/da0s1a' .. (this may take a few minutes)
The following filesystems were archived: /

fpc1:
--------------------------------------------------------------------------
Copying '/dev/da0s2a' to '/dev/da0s1a' .. (this may take a few minutes)
The following filesystems were archived: /

fpc2:
--------------------------------------------------------------------------
Copying '/dev/da0s2a' to '/dev/da0s1a' .. (this may take a few minutes)
The following filesystems were archived: /

fpc3:
--------------------------------------------------------------------------
Copying '/dev/da0s2a' to '/dev/da0s1a' .. (this may take a few minutes)
The following filesystems were archived: /

fpc4:
--------------------------------------------------------------------------
Copying '/dev/da0s2a' to '/dev/da0s1a' .. (this may take a few minutes)
The following filesystems were archived: /

fpc5:
--------------------------------------------------------------------------
Copying '/dev/da0s2a' to '/dev/da0s1a' .. (this may take a few minutes)
The following filesystems were archived: /
```

request system software add

Syntax

```
request system  software add package-name
<best-effort-load>
<delay-restart>
<force>
<no-copy>
<no-validate>
<re0 | re1>
<reboot>
<set [package-name package-name]>
<unlink>
<validate>
```

Syntax (EX Series Switches)

```
request system  software add package-name
<best-effort-load>
<delay-restart>
<force>
<no-copy>
<no-validate>
<re0 | re1>
<reboot>
<set [package-name package-name]>
<validate>
```

Syntax (TX Matrix Router)

```
request system software add package-name
<best-effort-load>
<delay-restart>
<force>
<lcc number | scc>
<no-copy>
<no-validate>
<re0 | re1>
<reboot>
<set [package-name package-name]>
<unlink>
<validate>
```

Syntax (TX Matrix Plus Router)

```
request system software add package-name
<best-effort-load>
<delay-restart>
<force>
<lcc number | sfc number>
<no-copy>
<no-validate>
<re0 | re1>
<reboot>
<set [package-name package-name]>
<unlink>
<validate>
```

Syntax (MX Series Router)

```
request system  software add package-name
<best-effort-load>
<delay-restart>
```

<force>
<member *member-id*>
<no-copy>
<no-validate>
<re0 | re1>
<reboot>
<set [*package-name package-name*]>
<unlink>
<validate>

Syntax (QFX Series)

request system software add *package-name*
<best-effort-load>
<component all>
<delay-restart>
<force>
<no-copy>
<no-validate>
<partition>
<reboot>
<unlink>
<validate>

Release Information

Command introduced before Junos OS Release 7.4.
best-effort-load and **unlink** options added in Junos OS Release 7.4.
Command introduced in Junos OS Release 9.0 for EX Series switches.
sfc option introduced for the TX Matrix Plus router in Junos OS Release 9.6.
Command introduced in Junos OS Release 11.1 for the QFX Series.
set [*package-name package-name*] option added in Junos OS Release 11.1 for EX Series switches.
set [*package-name package-name*] option added in Junos OS Release 12.2 for M Series, MX Series, T Series routers, and Branch SRX Series Services Gateways.

NOTE: On EX Series switches, the **set [*package-name package-name*]** option allows you to install only two software packages on a mixed EX4200 and EX4500 Virtual Chassis, whereas, on M Series, MX Series, T Series routers, and Branch SRX Series Services Gateways, the **set [*package-name package-name*]** option allows you to install multiple software packages and software add-on packages at the same time.

Description

Install a software package or bundle on the router or switch.

Options

package-name—Location from which the software package or bundle is to be installed. For example:

- **/var/tmp/*package-name***—For a software package or bundle that is being installed from a local directory on the router or switch.
- ***protocol://hostname/pathname/package-name***—For a software package or bundle that is to be downloaded and installed from a remote location. Replace ***protocol*** with one of the following:

- **ftp**—File Transfer Protocol.
  Use **ftp***://hostname/pathname/package-name*. To specify authentication credentials, use **ftp***://<username>:<password>@hostname/pathname/package-name*. To have the system prompt you for the password, specify **prompt** in place of the password. If a password is required, and you do not specify the password or **prompt**, an error message is displayed.
- **http**—Hypertext Transfer Protocol.
  Use **http***://hostname/pathname/package-name*. To specify authentication credentials, use **http***://<username>:<password>@hostname/pathname/package-name*. If a password is required and you omit it, you are prompted for it.
- **scp**—Secure copy (available only for Canada and U.S. version).
  Use **scp***://hostname/pathname/package-name*. To specify authentication credentials, use **scp***://<username>:<password>@hostname/pathname/package-name*.

NOTE:

- The *pathname* in the protocol is the relative path to the user's home directory on the remote system and not the root directory.
- Do not use the **scp** protocol in the **request system software add** command to download and install a software package or bundle from a remote location. The previous statement does not apply to the QFabric switch. The software upgrade is handled by the MGD process which does not support scp.
  Use the **file copy** command to copy the software package or bundle from the remote location to the **/var/tmp** directory on the hard disk:
  file copy scp*://source/package-name* **/var/tmp**
  Then install the software package or bundle using the **request system software add** command:
  request system software add /var/tmp*/package-name*
- On a J Series Services Router, when you install the software from a remote location, the package is removed at the earliest opportunity in order to make room for the installation to be completed. If you copy the software to a local directory on the router and then install the new package, use the **unlink** option to achieve the same effect and allow the installation to be completed.

best-effort-load—(Optional) Activate a partial load and treat parsing errors as warnings instead of errors.

component all—(QFabric systems only) (Optional) Install software package on all of the QFabric components.

delay-restart—(Optional) Install a software package or bundle, but do not restart software processes.

force—(Optional) Force the addition of the software package or bundle (ignore warnings).

lcc ***number*** —(TX Matrix routers and TX Matrix Plus routers only) (Optional) In a routing matrix based on the TX Matrix router, install a software package or bundle on a T640 router that is connected to the TX Matrix router. In a routing matrix based on the TX Matrix Plus router, install a software package or bundle on a router that is connected to the TX Matrix Plus router.

Replace *number* with the following values depending on the LCC configuration:

- 0 through 3, when T640 routers are connected to a TX Matrix router in a routing matrix.
- 0 through 3, when T1600 routers are connected to a TX Matrix Plus router in a routing matrix.
- 0 through 7, when T1600 routers are connected to a TX Matrix Plus router with 3D SIBs in a routing matrix.
- 0, 2, 4, or 6, when T4000 routers are connected to a TX Matrix Plus router with 3D SIBs in a routing matrix.

member ***member-id***—(MX Series routers only) (Optional) Install a software package on the specified Virtual Chassis member. Replace ***member-id*** with a value of 0 or 1.

partition —(QFX3500 switches only) (Optional) Format and repartition the media before installation.

scc—(TX Matrix routers only) (Optional) Install a software package or bundle on a Routing Engine on a TX Matrix router (or switch-card chassis).

sfc ***number***—(TX Matrix Plus routers only) (Optional) Install a software package or bundle on a Routing Engine on a TX Matrix Plus router. Replace *number* with 0.

no-copy—(Optional) Install a software package or bundle, but do not save copies of the package or bundle files.

no-validate—(Optional) When loading a software package or bundle with a different release, suppress the default behavior of the **validate** option.

re0 | re1—(Optional) On routers or switches that support dual or redundant Routing Engines, load a software package or bundle on the Routing Engine in slot 0 (re0) or the Routing Engine in slot 1 (re1).

reboot—(Optional) After adding the software package or bundle, reboot the system. On a QFabric switch, the software installation is not complete until you reboot the component for which you have installed the software.

set [*package-name package-name*]—(Mixed EX4200 and EX4500 Virtual Chassis only) (Optional) Install two software packages—a package for an EX4200 switch and the

same release of the package for an EX4500 switch—to upgrade all member switches in a mixed EX4200 and EX4500 Virtual Chassis.

set [*package-name package-name*]—(M Series, MX Series, T Series routers, and Branch SRX Series Services Gateways only) (Optional) Install multiple software packages and software add-on packages at the same time.

unlink—(Optional) On J Series Services Routers, this option ensures that the software package is removed at the earliest opportunity in order to make room for the installation to be completed. On M Series, T Series, and MX Series routers, use the **unlink** option to remove the software package from this directory after a successful upgrade is completed.

validate—(Optional) Validate the software package or bundle against the current configuration as a prerequisite to adding the software package or bundle. This is the default behavior when the software package or bundle being added is a different release.

Additional Information

NOTE: The **request system snapshot** command is currently not supported on the QFabric system. Also, you cannot add or install multiple packages on a QFabric system.

Before upgrading the software on the router or switch, when you have a known stable system, issue the **request system snapshot** command to back up the software, including the configuration, to the **/altroot** and **/altconfig** file systems. After you have upgraded the software on the router or switch and are satisfied that the new package or bundle is successfully installed and running, issue the **request system snapshot** command again to back up the new software to the **/altroot** and **/altconfig** file systems.

After you run the **request system snapshot** command, you cannot return to the previous version of the software, because the running and backup copies of the software are identical.

If you are upgrading more than one package at the same time, delete the operating system package, jkernel, last. Add the operating system package, jkernel, first and the routing software package, jroute, last. If you are upgrading all packages at once, delete and add them in the following order:

```
user@host> request system software add /var/tmp/jbase
user@host> request system software add /var/tmp/jkernel
user@host> request system software add /var/tmp/jpfe
user@host> request system software add /var/tmp/jdocs
user@host> request system software add /var/tmp/jroute
user@host> request system software add /var/tmp/jcrypto
```

By default, when you issue the **request system software add *package-name*** command on a TX Matrix master Routing Engine, all the T640 master Routing Engines that are connected to it are upgraded to the same version of software. If you issue the same

command on the TX Matrix backup Routing Engine, all the T640 backup Routing Engines that are connected to it are upgraded to the same version of software.

Likewise, when you issue the **request system software add *package-name*** command on a TX Matrix Plus master Routing Engine, all the T1600 or T4000 master Routing Engines that are connected to it are upgraded to the same version of software. If you issue the same command on the TX Matrix Plus backup Routing Engine, all the T1600 or T4000 backup Routing Engines that are connected to it are upgraded to the same version of software.

Required Privilege Level

maintenance

Related Documentation

- request system software delete
- request system software rollback
- request system storage cleanup
- Upgrading Software on QFX3500 and QFX3600 Standalone Switches
- Upgrading Software on a QFabric System
- *Routing Matrix with a TX Matrix Plus Router Solutions Page*

List of Sample Output

request system software add validate on page 221
request system software add (Mixed EX4200 and EX4500 Virtual Chassis) on page 221
request system software add component all (QFabric Systems) on page 221

Output Fields

When you enter this command, you are provided feedback on the status of your request.

Sample Output

request system software add validate

```
user@host> request system software add validate /var/tmp/ jinstall-7.2R1.7-domestic-signed.tgz
Checking compatibility with configuration
Initializing...
Using jbase-7.1R2.2
Using /var/tmp/jinstall-7.2R1.7-domestic-signed.tgz
Verified jinstall-7.2R1.7-domestic.tgz signed by PackageProduction_7_2_0
Using /var/validate/tmp/jinstall-signed/jinstall-7.2R1.7-domestic.tgz
Using /var/validate/tmp/jinstall/jbundle-7.2R1.7-domestic.tgz
Checking jbundle requirements on /
Using /var/validate/tmp/jbundle/jbase-7.2R1.7.tgz
Using /var/validate/tmp/jbundle/jkernel-7.2R1.7.tgz
Using /var/validate/tmp/jbundle/jcrypto-7.2R1.7.tgz
Using /var/validate/tmp/jbundle/jpfe-7.2R1.7.tgz
Using /var/validate/tmp/jbundle/jdocs-7.2R1.7.tgz
Using /var/validate/tmp/jbundle/jroute-7.2R1.7.tgz
Validating against /config/juniper.conf.gz
mgd: commit complete
Validation succeeded
Validating against /config/rescue.conf.gz
mgd: commit complete
Validation succeeded
Installing package '/var/tmp/jinstall-7.2R1.7-domestic-signed.tgz' ...
Verified jinstall-7.2R1.7-domestic.tgz signed by PackageProduction_7_2_0
Adding jinstall...

WARNING:     This package will load JUNOS 7.2R1.7 software.
WARNING:     It will save JUNOS configuration files, and SSH keys
WARNING:     (if configured), but erase all other files and information
WARNING:     stored on this machine.  It will attempt to preserve dumps
WARNING:     and log files, but this can not be guaranteed.  This is the
WARNING:     pre-installation stage and all the software is loaded when
WARNING:     you reboot the system.

Saving the config files ...
Installing the bootstrap installer ...

WARNING:     A REBOOT IS REQUIRED TO LOAD THIS SOFTWARE CORRECTLY. Use the
WARNING:     'request system reboot' command when software installation is
WARNING:     complete. To abort the installation, do not reboot your system,
WARNING:     instead use the 'request system software delete jinstall'
WARNING:     command as soon as this operation completes.

Saving package file in /var/sw/pkg/jinstall-7.2R1.7-domestic-signed.tgz ...
Saving state for rollback ...
```

Sample Output

request system software add (Mixed EX4200 and EX4500 Virtual Chassis)

```
user@switch> request system software add set
[/var/tmp/jinstall-ex-4200-11.1R1.1-domestic-signed.tgz
/var/tmp/jinstall-ex-4500-11.1R1.1-domestic-signed.tgz]
...
```

request system software add

```
user@switch> request system software add /pbdata/packages/jinstall-qfabric-12.2X50-D1.3.rpm
component all
...
```

component all (QFabric Systems)

request system zeroize

Syntax

request system zeroize
<media>

Release Information

Command introduced before Junos OS Release 9.0.
Command introduced in Junos OS Release 11.2 for EX Series switches.
Option **media** added in Junos OS Release 11.4 for EX Series switches.
Command introduced in Junos OS Release 12.2 for MX Series devices.
Command introduced in Junos OS Release 12.3 for the QFX Series.

Description

NOTE: **The media option is not available on the QFX Series.**

Remove all configuration information on the Routing Engines and reset all key values. If the device has dual Routing Engines, the command is broadcast to all Routing Engines on the device. The command removes all data files, including customized configuration and log files, by unlinking the files from their directories. The command removes all user-created files from the system including all plain-text passwords, secrets, and private keys for SSH, local encryption, local authentication, IPsec, RADIUS, TACACS+, and SNMP.

This command reboots the device and sets it to the factory default configuration. After the reboot, you cannot access the device through the management Ethernet interface. Log in through the console as **root** and start the Junos OS command-line interface (CLI) by typing **cli** at the prompt.

To completely erase user-created data so that it is unrecoverable, use the **media** option.

Options

media—(Optional) In addition to removing all configuration and log files, the **media** option causes memory and the media to be scrubbed, removing all traces of any user-created files. Every storage device attached to the system is scrubbed, including disks, flash drives, removable USBs, and the like. The duration of the scrubbing process is dependent on the size of the media being erased. As a result, the **request system zeroize media** operation can take considerably more time than the **request system zeroize** operation. However, the critical security parameters are all removed at the beginning of the process.

Required Privilege Level

maintenance

Related Documentation

- request system snapshot on page 208
- request system snapshot
- Reverting to the Default Factory Configuration for the EX Series Switch
- Reverting to the Rescue Configuration for the EX Series Switch
- Reverting to the Default Factory Configuration

- Reverting to the Rescue Configuration
- Reverting to the Default Factory Configuration by Using the request system zeroize Command

List of Sample Output

Sample Output

request system zeroize

```
user@host> request system zeroize
warning: System will be rebooted and may not boot without configuration
Erase all data, including configuration and log files? [yes,no] (no) yes

0 1 1 0 0 0 done

syncing disks... All buffers synced.
Uptime: 5d19h20m26s
recorded reboot as normal shutdown
Rebooting...

U-Boot 1.1.6 (Mar 11 2011 - 04:39:06)

Board: EX4200-24T 2.11
EPLD:  Version 6.0 (0x85)
DRAM:  Initializing (1024 MB)
FLASH: 8 MB

Firmware Version: --- 01.00.00 ---
USB:   scanning bus for devices... 2 USB Device(s) found
       scanning bus for storage devices... 1 Storage Device(s) found

ELF file is 32 bit
Consoles: U-Boot console

FreeBSD/PowerPC U-Boot bootstrap loader, Revision 2.4
(user@juniper.net, Fri Mar 11 03:03:36 UTC 2011)
Memory: 1024MB
bootsequencing is enabled
bootsuccess is set
new boot device = disk0s1:
Loading /boot/defaults/loader.conf
/kernel data=0x915c84+0xa1260 syms=[0x4+0x7cbd0+0x4+0xb1c19]


Hit [Enter] to boot immediately, or space bar for command prompt.
Booting [/kernel]...
Kernel entry at 0x800000e0 ...
GDB: no debug ports present
KDB: debugger backends: ddb
KDB: current backend: ddb
Copyright (c) 1996-2011, Juniper Networks, Inc.
All rights reserved.
Copyright (c) 1992-2006 The FreeBSD Project.
Copyright (c) 1979, 1980, 1983, 1986, 1988, 1989, 1991, 1992, 1993, 1994
        The Regents of the University of California. All rights reserved.
JUNOS 11.1R1.8 #0: 2011-03-09 20:14:25 UTC

user@juniper.net:/volume/build/junos/11.1/release/11.1R1.8/obj-powerpc/bsd/kernels/
  JUNIPER-EX/kernel
Timecounter "decrementer" frequency 50000000 Hz quality 0
cpu0: Freescale e500v2 core revision 2.2
cpu0: HID0 80004080
...
```

request system zeroize

```
user@host> request system zeroize media
warning: System will be rebooted and may not boot without configuration
```

media

```
Erase all data, including configuration and log files? [yes,no] (no) yes

warning: ipsec-key-management subsystem not running - not needed by configuration.
warning: zeroizing fpc0

{master:0}
root> Waiting (max 60 seconds) for system process `vnlru' to stop...done
. . .
Syncing disks, vnodes remaining...2 4 2 4 3 2 1 1 0 0 0 done

syncing disks... All buffers synced.
Uptime: 14m50s
recorded reboot as normal shutdown
Rebooting...

U-Boot 1.1.6 (Apr 21 2011 - 13:58:42)

Board: EX4200-48PX 1.1
EPLD:  Version 8.0 (0x82)
DRAM:  Initializing (512 MB)
FLASH: 8 MB
NAND:  No NAND device found!!!
0 MiB

Firmware Version: --- 01.00.00 ---
USB:   scanning bus for devices... 2 USB Device(s) found
       scanning bus for storage devices... 1 Storage Device(s) found

ELF file is 32 bit
Consoles: U-Boot console

FreeBSD/PowerPC U-Boot bootstrap loader, Revision 2.2
(vtseng@svl-junos-pool27.juniper.net, Fri Feb 26 17:48:51 PST 2010)
Memory: 512MB
Loading /boot/defaults/loader.conf
/kernel data=0x9abfdc+0xb06e4 syms=[0x4+0x83b30+0x4+0xbd7c6]

Hit [Enter] to boot immediately, or space bar for command prompt.
Booting [/kernel] in 1 second... Booting [/kernel]...
Kernel entry at 0x800000e0 ...
GDB: no debug ports present
KDB: debugger backends: ddb
KDB: current backend: ddb
Copyright (c) 1996-2011, Juniper Networks, Inc.
All rights reserved.
Copyright (c) 1992-2006 The FreeBSD Project.
Copyright (c) 1979, 1980, 1983, 1986, 1988, 1989, 1991, 1992, 1993, 1994
 The Regents of the University of California. All rights reserved.
JUNOS 11.4R1.2 #0: 2011-10-27 18:05:39 UTC
    user@juniper.net:/volume/build/junos/11.4/release/11.4R1.2/obj-powerpc/
bsd/kernels/JUNIPER-EX/kernel
can't re-use a leaf (all_slot_serialid)!
Timecounter "decrementer" frequency 50000000 Hz quality 0
cpu0: Freescale e500v2 core revision 2.2
cpu0: HID0 80004080<EMCP,TBEN,EN_MAS7_UPDATE>
real memory  = 511705088 (488 MB)
avail memory = 500260864 (477 MB)
ETHERNET SOCKET BRIDGE initialising
Initializing EXSERIES platform properties ...
. . .
Automatic reboot in progress...
```

```
Media check on da0 on ex platforms
** /dev/da0s2a
FILE SYSTEM CLEAN; SKIPPING CHECKS
clean, 20055 free (31 frags, 2503 blocks, 0.0% fragmentation)
zeroizing /dev/da0s1a ...
. . .
zeroizing /dev/da0s3d ...
. . .
zeroizing /dev/da0s3e ...
. . .
zeroizing /dev/da0s4d ...
. . .
zeroizing /dev/da0s4e ...
. . .

syncing disks... All buffers synced.
Uptime: 3m40s
Rebooting...

U-Boot 1.1.6 (Apr 21 2011 - 13:58:42)

Board: EX4200-48PX 1.1
EPLD:  Version 8.0 (0x82)
DRAM:  Initializing (512 MB)
FLASH: 8 MB
NAND:  No NAND device found!!!
0 MiB

Firmware Version: --- 01.00.00 ---
USB:   scanning bus for devices... 2 USB Device(s) found
       scanning bus for storage devices... 1 Storage Device(s) found

ELF file is 32 bit
Consoles: U-Boot console

FreeBSD/PowerPC U-Boot bootstrap loader, Revision 2.2
(vtseng@svl-junos-pool27.juniper.net, Fri Feb 26 17:48:51 PST 2010)
Memory: 512MB
Loading /boot/defaults/loader.conf
/kernel data=0x9abfdc+0xb06e4 syms=[0x4+0x83b30+0x4+0xbd7c6]

Hit [Enter] to boot immediately, or space bar for command prompt.
Booting [/kernel] in 1 second... Booting [/kernel]...
Kernel entry at 0x800000e0 ...
GDB: no debug ports present
KDB: debugger backends: ddb
KDB: current backend: ddb
Copyright (c) 1996-2011, Juniper Networks, Inc.
All rights reserved.
Copyright (c) 1992-2006 The FreeBSD Project.
Copyright (c) 1979, 1980, 1983, 1986, 1988, 1989, 1991, 1992, 1993, 1994
 The Regents of the University of California. All rights reserved.
JUNOS 11.4R1.2 #0: 2011-10-27 18:05:39 UTC
    user@juniper.net:/volume/build/junos/11.4/release/11.4R1.2/obj-powerpc/
bsd/kernels/JUNIPER-EX/kernel
can't re-use a leaf (all_slot_serialid)!
Timecounter "decrementer" frequency 50000000 Hz quality 0
cpu0: Freescale e500v2 core revision 2.2
cpu0: HID0 80004080 <EMCP,TBEN,EN_MAS7_UPDATE>
real memory  = 511705088 (488 MB)
avail memory = 500260864 (477 MB)
```

```
ETHERNET SOCKET BRIDGE initialising
Initializing EXSERIES platform properties ...
. . .
Automatic reboot in progress...
Media check on da0 on ex platforms
** /dev/da0s1a
FILE SYSTEM CLEAN; SKIPPING CHECKS
clean, 20064 free (48 frags, 2502 blocks, 0.1% fragmentation)
zeroizing /dev/da0s2a ...
. . .
Creating initial configuration...mgd: error: Cannot open configuration file:
/config/juniper.conf
mgd: warning: activating factory configuration
mgd: commit complete
mgd: ------------------------------------------------------------
mgd: Please login as 'root'. No password is required.
mgd: To start Initial Setup, type 'ezsetup' at the JUNOS prompt.
mgd: To start JUNOS CLI, type 'cli' at the JUNOS prompt.
mgd: ------------------------------------------------------------
Setting initial options:  debugger_on_panic=NO debugger_on_break=NO.
Starting optional daemons: .
Doing initial network setup:
. . .

Amnesiac (ttyu0)
```

CHAPTER 10

System Software Monitoring Commands

show configuration

Syntax show configuration
<statement-path>

Release Information Command introduced before Junos OS Release 7.4.
Command introduced in Junos OS Release 9.0 for EX Series switches.

Description Display the configuration that currently is running on the router or switch, which is the last committed configuration.

Options **none**—Display the entire configuration.

statement-path—(Optional) Display one of the following hierarchies in a configuration. (Each ***statement-path*** option has additional suboptions not described here. See the appropriate configuration guide or EX Series switch documentation for more information.)

- **access**—Network access configuration.
- **access-profile**—Access profile configuration.
- **accounting-options**—Accounting data configuration.
- **applications**—Applications defined by protocol characteristics.
- **apply-groups**—Groups from which configuration data is inherited.
- **chassis**—Chassis configuration.
- **chassis network-services**—Current running mode.
- **class-of-service**—Class-of-service configuration.
- **diameter**—Diameter base protocol layer configuration.
- **ethernet-switching-options**—(EX Series switch only) Ethernet switching configuration.
- **event-options**—Event processing configuration.
- **firewall**—Firewall configuration.
- **forwarding-options**—Options that control packet sampling.
- **groups**—Configuration groups.
- **interfaces**—Interface configuration.
- **jsrc**—JSRC partition configuration.
- **jsrc-partition**—JSRC partition configuration.
- **logical-systems**—Logical system configuration.
- **poe**—(EX Series switch only) Power over Ethernet configuration.
- **policy-options**—Routing policy option configuration.
- **protocols**—Routing protocol configuration.

- **routing-instances**—Routing instance configuration.
- **routing-options**—Protocol-independent routing option configuration.
- **security**—Security configuration.
- **services**—Service PIC applications configuration.
- **snmp**—Simple Network Management Protocol configuration.
- **system**—System parameters configuration.
- **virtual-chassis**—(EX Series switch only) Virtual Chassis configuration.
- **vlans**—(EX Series switch only) VLAN configuration.

Additional Information

The portions of the configuration that you can view depend on the user class that you belong to and the corresponding permissions. If you do not have permission to view a portion of the configuration, the text **ACCESS-DENIED** is substituted for that portion of the configuration. If you do not have permission to view authentication keys and passwords in the configuration, because the secret permission bit is not set for your user account, the text SECRET-DATA is substituted for that portion of the configuration. If an identifier in the configuration contains a space, the identifier is displayed in quotation marks.

Likewise, when you issue the **show configuration** command with the **| display set** pipe option to view the configuration as **set** commands, those portions of the configuration that you do not have permissions to view are substituted with the text **ACCESS-DENIED**.

Required Privilege Level

view

Related Documentation

- Displaying the Current Junos OS Configuration
- Overview of Junos OS CLI Operational Mode Commands

List of Sample Output

show configuration on page 232
show configuration policy-options on page 232

Output Fields

This command displays information about the current running configuration.

Sample Output

show configuration

```
user@host> show configuration
## Last commit: 2006-10-31 14:13:00 PST by alant version "8.2I0 [builder]"; ##
last changed: 2006-10-31 14:05:53 PST
system {
    host-name nestor;
    domain-name east.net;
    backup-router 192.1.1.254;
   time-zone America/Los_Angeles;
    default-address-selection;
    name-server {
        192.154.169.254;
        192.154.169.249;
        192.154.169.176;
    }
    services {
        telnet;
    }
    tacplus-server {
        1.2.3.4 {
            secret /* SECRET-DATA */;
            ...
        }
    }
}
interfaces {
    ...
}
protocols {
        isis {
            export "direct routes";
        }
}
policy-options {
    policy-statement "direct routes" {
        from protocol direct;
        then accept;
    }
}
```

show configuration policy-options

```
user@host> show configuration policy-options
policy-options {
    policy-statement "direct routes" {
        from protocol direct;
        then accept;
    }
}
```

show host

Syntax show host *hostname*

Release Information Command introduced before Junos OS Release 7.4.
Command introduced in Junos OS Release 9.0 for EX Series switches.
Command introduced in Junos OS Release 11.1 for the QFX Series.

Description Display Domain Name System (DNS) hostname information.

Options ***hostname***—Hostname or address.

Additional Information The **show host** command displays the raw data received from the DNS server.

Required Privilege Level view

List of Sample Output show host on page 233

Sample Output

show host

```
user@host> show host snark
snark.boojum.net has address 192.168.1.254

user@host> show host 192.168.1.254
Name: snark.boojum.net
Address: 192.168.1.254
Aliases:
```

show system commit

Syntax show system commit

Release Information Command introduced before Junos OS Release 7.4.
Command introduced in Junos OS Release 9.0 for EX Series switches.
Command introduced in Junos OS Release 11.1 for the QFX Series.

Description Display the system commit history and any pending commit operation.

Options This command has no options.

Required Privilege Level view

Related Documentation
- clear system commit on page 176

List of Sample Output
show system commit on page 235
show system commit (At a Particular Time) on page 235
show system commit (At the Next Reboot) on page 235
show system commit (Rollback Pending) on page 235
show system commit (QFX Series) on page 235

Output Fields Table 8 on page 234 describes the output fields for the **show system commit** command. Output fields are listed in the approximate order in which they appear.

Table 8: show system commit Output Fields

Field Name	Field Description
Junos XML protocol	Displays the last 50 commit operations listed, most recent to first. The identifier **Junos XML protocol** designates a configuration created for recovery using the **request system configuration rescue save** command.
Junos XML protocol	Date and time of the commit operation.
Junos XML protocol	User who executed the commit operation.
Junos XML protocol	Method used to execute the commit operation: • **Junos XML protocol**—CLI interactive user performed the commit operation. • **Junos XML protocol**—Junos XML protocol client performed the commit operation. • **synchronize**—The **commit synchronize** command was performed on the other Routing Engine. • **snmp**—An SNMP **set** request caused the commit operation. • **button**—A button on the router or switch was pressed to commit a rescue configuration for recovery. • **autoinstall**—A configuration obtained through autoinstallation was committed. • **other**—When there is no login name associated with the session, the values for user and client default to root and other. For example, during a reboot after package installation, mgd commits the configuration as a system commit, and there is no login associated with the commit.

Sample Output

show system commit

```
user@host> show system commit
0   2003-07-28 19:14:04 PDT by root via other
1   2003-07-25 22:01:36 PDT by regress via cli
2   2003-07-25 22:01:32 PDT by regress via cli
3   2003-07-25 21:30:13 PDT by root via button
4   2003-07-25 13:46:48 PDT by regress via cli
5   2003-07-25 05:33:21 PDT by root via autoinstall
...
rescue  2002-05-10 15:32:03 PDT by root via other
```

show system commit (At a Particular Time)

```
user@host> show system commit
commit requested by root via cli at Tue May  7 15:59:00 2002
```

show system commit (At the Next Reboot)

```
user@host> show system commit
commit requested by root via cli at reboot
```

show system commit (Rollback Pending)

```
user@host> show system commit
0 2005-01-05 15:00:37 PST by root via cli commit confirmed, rollback in 3mins
```

show system commit (QFX Series)

```
user@switch> show system commit
0   2011-11-25 19:17:49 PST by root via cli
```

show system configuration archival

Syntax show system configuration archival

Release Information Introduced in Junos OS Release 7.6.
Command introduced in Junos OS Release 9.0 for EX Series switches.
Command introduced in Junos OS Release 11.1 for the QFX Series.

Description Display directory and number of files queued for archival transfer.

NOTE: The **[edit system configuration]** hierarchy is not available on QFabric systems.

Options This command has no options.

Required Privilege Level maintenance

List of Sample Output show system configuration archival on page 236

Sample Output

show system configuration archival

```
user@host> show system configuration archival

/var/transfer/config/:
total 8
```


show system configuration rescue

Syntax show system configuration rescue

Release Information Command introduced before Junos OS Release 7.4.
Command introduced in Junos OS Release 9.0 for EX Series switches.
Command introduced in Junos OS Release 11.1 for the QFX Series.

Description Display a rescue configuration, if one exists.

NOTE: The **[edit system configuration]** hierarchy is not available on QFabric systems.

Options This command has no options.

Required Privilege Level maintenance

Related Documentation

- show system configuration archival on page 236

List of Sample Output show system configuration rescue on page 238

Sample Output

show system configuration rescue

```
user@switch> show system configuration rescue
version "7.3"; groups {
    global {
        system {
            host-name router1;
            domain-name customer.net;
            domain-search [ customer.net ];
            backup-router 192.168.124.254;
            name-server {
                172.17.28.11;
                172.17.28.101;
                172.17.28.100;
                172.17.28.10;
            }
            login {
                user regress {
                    uid 928;
                    class ;
                    shell csh;
                    authentication {
                        encrypted-password "$1$kPU..$w.4FGRAGanJ8U4Yq6sbj7."; ##
 SECRET-DATA
                    }
                }
            }
            services {
                ftp;
                rlogin;
                rsh;
                telnet;
            }
        }
    }
....
```

show system processes

Syntax

show system processes
<brief | detail | extensive | summary>
<health (pid *process-identifer* | process-name *process-name*)>
<providers>
<resource-limits (brief | detail) *process-name*>
<wide>

Syntax (EX Series Switches)

show system processes
<all-members>
<brief | detail | extensive | summary>
<health (pid *process-identifer* | process-name *process-name*)>
<local>
<member *member-id*>
<providers>
<resource-limits (brief | detail) *process-name*>
<wide>

Syntax (MX Series Routers)

show system processes
<all-members>
<brief | detail | extensive | summary>
<health (pid *process-identifer* | process-name *process-name*)>
<local>
<member *member-id*>
<providers>
<resource-limits (brief | detail) *process-name*>
<wide>

Syntax (QFX Series)

show system processes
<brief | detail | extensive | summary >
<health (pid *process-identifer* | process-name *process-name*)>
<interconnect-device *name*>
<node-group *name*>
<providers>
<resource-limits>
<wide>

Syntax (TX Matrix Routers)

show system processes
<brief | detail | extensive | summary>
<all-chassis| all-lcc | lcc *number* | scc>
<wide>

Syntax (TX Matrix Plus Router)

show system processes
<brief | detail | extensive | summary>
<all-chassis| all-lcc | lcc *number* | sfc *number*>
<wide>

Release Information

Command introduced before Junos OS Release 7.4.
Command introduced in Junos OS Release 9.0 for EX Series switches.
Option **sfc** introduced for the TX Matrix Plus router in Junos OS Release 9.6.
Command introduced in Junos OS Release 11.1 for the QFX Series.

Description Display information about software processes that are running on the router or switch and that have controlling terminals.

Options **none**—Display standard information about system processes.

brief | detail | extensive | summary—(Optional) Display the specified level of detail.

adaptive-services—(Optional) Display the configuration management process that manages the configuration for stateful firewall, Network Address Translation (NAT), intrusion detection services (IDS), and IP Security (IPsec) services on the Adaptive Services PIC.

alarm-control—(Optional) Display the process to configure the system alarm.

all-chassis—(TX Matrix routers and TX Matrix Plus routers only) (Optional) Display standard system process information about all the T640 routers (in a routing matrix based on the TX Matrix router) or all the T1600 or T4000 routers (in a routing matrix based on the TX Matrix Plus router) in the chassis.

all-lcc—(TX Matrix routers and TX Matrix Plus router only) (Optional) Display standard system process information for all T640 routers (or line-card chassis) connected to the TX Matrix router. Display standard system process information for all connected T1600 or T4000 LCCs.

all-members—(EX4200 switches and MX Series routers only) (Optional) Display standard system process information for all members of the Virtual Chassis configuration.

ancpd-service—Display the Access Node Control Protocol (ANCP) process, which works with a special Internet Group Management Protocol (IGMP) session to collect outgoing interface mapping events in a scalable manner.

application-identification —Display the process that identifies an application using intrusion detection and prevention (IDP) to allow or deny traffic based on applications running on standard or nonstandard ports.

audit-process—(Optional) Display the RADIUS accounting process.

auto-configuration—Display the Interface Auto-Configuration process.

bootp—Display the process that enables a router, switch, or interface to act as a Dynamic Host Configuration Protocol (DHCP) or bootstrap protocol (BOOTP) relay agent. DHCP relaying is disabled.

captive-portal-content-delivery—Display the HTTP redirect service by specifying the location to which a subscriber's initial Web browser session is redirected, enabling initial provisioning and service selection for the subscriber.

ce-l2tp-service—(Optional) (M10, M10i, M7i, and MX Series routers only) Display the Universal Edge Layer 2 Tunneling Protocol (L2TP) process, which establishes L2TP tunnels and Point-to-Point Protocol (PPP) sessions through L2TP tunnels.

cfm—Display Ethernet Operations, Administration, and Maintenance (OAM) connectivity fault management (CFM) process, which can be used to monitor the physical link between two switches.

chassis-control—(Optional) Display the chassis management process.

class-of-service—(Optional) Display the class-of-service (CoS) process, which controls the router's or switch's CoS configuration.

clksyncd-service—Display the external clock synchronization process, which uses synchronous Ethernet (SyncE).

craft-control—Display the process for the I/O of the craft interface.

database-replication—(EX Series switches and MX Series routers only) (Optional) Display the database replication process.

datapath-trace-service—Display the packet path tracing process.

dhcp-service—(EX Series switches and MX Series routers only) (Optional) Display the Dynamic Host Configuration Protocol process, which enables a DHCP server to allocate network IP addresses and deliver configuration settings to client hosts without user intervention.

diameter-service—(Optional) Display the diameter process.

disk-monitoring—(Optional) Display the disk monitoring process, which checks the health of the hard disk drive on the Routing Engine.

dynamic-flow-capture—(Optional) Display the dynamic flow capture (DFC) process, which controls DFC configurations on Monitoring Services III PICs.

ecc-error-logging—(Optional) Display the error checking and correction (ECC) process, which logs ECC parity errors in memory on the Routing Engine.

ethernet-connectivity-fault-management— Display the process that provides IEEE 802.1ag OAM connectivity fault management (CFM) database information for CFM maintenance association end points (MEPs) in a CFM session.

ethernet-link-fault-management—(EX Series switches and MX Series routers only) (Optional) Display the process that provides the OAM link fault management (LFM) information for Ethernet interfaces.

event-processing—(Optional) Display the event process (eventd).

firewall—(Optional) Display the firewall management process, which manages the firewall configuration and enables accepting or rejecting packets that are transiting an interface on a router or switch.

general-authentication-service—(EX Series switches and MX Series routers only) (Optional) Display the general authentication process.

health (pid *process-identifer* | process-name *process-name*)—(Optional) Display process health information, either by process id (PID) or by process name.

iccp-service—Display the Inter-Chassis Communication Protocol (ICCP) process.

idp-policy—Display the intrusion detection and prevention (IDP) protocol process.

ilmi—Display the Integrated Local Management Interface (ILMI) protocol process, which provides bidirectional exchange of management information between two ATM interfaces across a physical connection.

inet-process—Display the IP multicast family process.

init—Display the process that initializes the USB modem.

interface-control—(Optional) Display the interface process, which controls the router's or switch's physical interface devices and logical interfaces.

kernel-replication—(Optional) Display the kernel replication process, which replicates the state of the backup Routing Engine when graceful Routing Engine switchover (GRES) is configured.

l2-learning—(Optional) Display the Layer 2 address flooding and learning process.

l2cpd-service—Display the Layer 2 Control Protocol process, which enables features such as Layer 2 protocol tunneling and nonstop bridging.

lacp—(Optional) Display the Link Aggregation Control Protocol (LACP)process. LACP provides a standardized means for exchanging information between partner systems on a link to allow their link aggregation control instances to reach agreement on the identity of the LAG to which the link belongs, and then to move the link to that LAG, and to enable the transmission and reception processes for the link to function in an orderly manner.

lcc *number*—(TX Matrix routers and TX Matrix Plus routers only) (Optional) On a TX Matrix router, display standard system process information for a specific T640 router that is connected to the TX Matrix router. On a TX Matrix Plus router, display standard system process information for a specific router that is connected to the TX Matrix Plus router.

Replace *number* with the following values depending on the LCC configuration:

- 0 through 3, when T640 routers are connected to a TX Matrix router in a routing matrix.
- 0 through 3, when T1600 routers are connected to a TX Matrix Plus router in a routing matrix.
- 0 through 7, when T1600 routers are connected to a TX Matrix Plus router with 3D SIBs in a routing matrix.
- 0, 2, 4, or 6, when T4000 routers are connected to a TX Matrix Plus router with 3D SIBs in a routing matrix.

local—(EX4200 switches and MX Series routers only) (Optional) Display standard system process information for the local Virtual Chassis member.

local-policy-decision-function—Display the process for the Local Policy Decision Function, which regulates collection of statistics related to applications and application groups and tracking of information about dynamic subscribers and static interfaces.

logical-system-mux—Display the logical router multiplexer process (lrmuxd), which manages the multiple instances of the routing protocols process (rpd) on a machine running logical routers.

mac-validation—Display the MAC validation process, which configures MAC address validation for subscriber interfaces created on demux interfaces in dynamic profiles on MX Series routers.

member ***member-id***—(EX4200 switches and MX Series routers only) (Optional) Display standard system process information for the specified member of the Virtual Chassis configuration. For EX4200 switches, replace ***member-id*** with a value from 0 through 9. For an MX Series Virtual Chassis, replace ***member-id*** with a value of 0 or 1.

mib-process—(Optional) Display the MIB II process, which provides the router's MIB II agent.

mobile-ip—(Optional) Display the Mobile IP process, which configures Junos OS Mobile IP features.

mountd-service—(EX Series switches and MX Series routers only) (Optional) Display the service for NFS mounts requests.

mpls-traceroute—(Optional) Display the MPLS Periodic Traceroute process.

mspd—(Optional) Display the Multiservice process.

multicast-snooping—(EX Series switches and MX Series routers only) (Optional) Display the multicast snooping process, which makes Layer 2 devices such as VLAN switches aware of Layer 3 information, such as the media access control (MAC) addresses of members of a multicast group.

named-service—(Optional) Display the DNS Server process, which is used by a router or a switch to resolve hostnames into addresses.

neighbor-liveness—Display the process, which specifies the maximum length of time that the router waits for its neighbor to re-establish an LDP session.

nfsd-service—(Optional) Display the Remote NFS Server process, which provides remote file access for applications that need NFS-based transport.

ntp—Display the Network Time Protocol (NTP) process, which provides the mechanisms to synchronize time and coordinate time distribution in a large, diverse network.

packet-triggered-subscribers—Display the packet-triggered subcribers and policy control (PTSP) process, which allows the application of policies to dynamic subscribers that are controlled by a subscriber termination device.

peer-selection-service—(Optional) Display the Peer Selection Service process.

periodic-packet-services—Display the Periodic packet management process, which is responsible for processing a variety of time-sensitive periodic tasks so that other processes can more optimally direct their resources.

pfe—Display the Packet Forwarding Engine management process.

pgcp-service—(Optional) Display the pgcpd service process running on the Routing Engine.

pgm—Display the Pragmatic General Multicast (PGM) protocol process, which enables a reliable transport layer for multicast applications.

pic-services-logging—(Optional) Display the logging process for some PICs. With this process, also known as fsad (the file system access daemon), PICs send special logging information to the Routing Engine for archiving on the hard disk.

ppp—(Optional) Display the Point-to-Point Protocol (PPP) process, which is the encapsulation protocol process for transporting IP traffic across point-to-point links.

ppp-service—Display the Universal edge PPP process, which is the encapsulation protocol process for transporting IP traffic across universal edge routers.

pppoe—(Optional) Display the Point-to-Point Protocol over Ethernet (PPPoE) process, which combines PPP that typically runs over broadband connections with the Ethernet link-layer protocol that allows users to connect to a network of hosts over a bridge or access concentrator.

process-monitor—Display the process health monitor process (pmond).

providers—(Optional) Display provider processes.

redundancy-interface-process—(Optional) Display the ASP redundancy process.

remote-operations—(Optional) Display the remote operations process, which provides the ping and traceroute MIBs.

resource-cleanup—Display the resource cleanup process.

resource-limits (brief | detail) ***process-name***—(Optional) Display process resource limits.

routing—(Optional) Display the routing protocol process.

sampling—(Optional) Display the sampling process, which performs packet sampling based on particular input interfaces and various fields in the packet header.

sbc-configuration-process—Display the session border controller (SBC) process of the border signaling gateway (BSG).

scc—(TX Matrix routers only) (Optional) Display standard system process information for the TX Matrix router (or switch-card chassis).

sdk-service—Display the SDK Service process, which runs on the Routing Engine and is responsible for communications between the SDK application and Junos OS. Although the SDK Service process is present on the router, it is turned off by default.

secure-neighbor-discovery—(EX Series switches and MX Series routers only) (Optional) Display the secure Neighbor Discovery Protocol (NDP) process, which provides support for protecting NDP messages.

send—(Optional) Display the Secure Neighbor Discovery Protocol (SEND) process, which provides support for protecting Neighbor Discovery Protocol (NDP) messages.

service-deployment—(Optional) Display the service deployment process, which enables Junos OS to work with the Session and Resource Control (SRC) software.

sfc *number*—(TX Matrix Plus routers only) (Optional) Display system process information for the TX Matrix Plus router. Replace ***number*** with 0.

snmp—Display the SNMP process, which enables the monitoring of network devices from a central location and provides the router's or switch's SNMP master agent.

sonet-aps—Display the SONET Automatic Protection Switching (APS) process, which monitors any SONET interface that participates in APS.

static-subscribers—(Optional) Display the Static subscribers process, which associates subscribers with statically configured interfaces and provides dynamic service activation and activation for these subscribers.

tunnel-oamd—(Optional) Display the Tunnel OAM process, which enables the Operations, Administration, and Maintenance of Layer 2 tunneled networks. Layer 2 protocol tunneling (L2PT) allows service providers to send Layer 2 protocol data units (PDUs) across the provider's cloud and deliver them to Juniper Networks EX Series Ethernet Switches that are not part of the local broadcast domain.

vrrp—(EX Series switches and MX Series routers only) (Optional) Display the Virtual Router Redundancy Protocol (VRRP) process, which enables hosts on a LAN to make use of redundant routing platforms on that LAN without requiring more than the static configuration of a single default route on the hosts.

watchdog—Display the watchdog timer process, which enables the watchdog timer when Junos OS encounters a problem.

wide—(Optional) Display process information that might be wider than 80 columns.

Additional Information

By default, when you issue the **show system processes** command on the master Routing Engine of a TX Matrix router or a TX Matrix Plus router, the command is broadcast to all the master Routing Engines of the LCCs connected to it in the routing matrix. Likewise, if you issue the same command on the backup Routing Engine of a TX Matrix or a TX Matrix Plus router, the command is broadcast to all backup Routing Engines of the LCCs that are connected to it in the routing matrix.

Required Privilege Level view

Related Documentation
- List of Junos OS Processes on page 14
- *Routing Matrix with a TX Matrix Plus Router Solutions Page*

List of Sample Output

Output Fields Table 9 on page 246 describes the output fields for the **show system processes** command. Output fields are listed in the approximate order in which they appear.

Table 9: show system processes Output Fields

Field Name	Field Description	Level of Output
last pid	Last process identifier assigned to the process.	**brief extensive summary**
load averages	Three load averages followed by the current time.	**brief extensive summary**
processes	Number of existing processes and the number of processes in each state (**sleeping, running, starting, zombies**, and **stopped**).	**brief extensive summary**
Mem	Information about physical and virtual memory allocation.	**brief extensive summary**
Swap	Information about physical and virtual memory allocation.	**brief extensive summary**
PID	Process identifier.	**detail extensive summary**
TT	Control terminal name.	none **detail**

Table 9: show system processes Output Fields *(continued)*

Field Name	Field Description	Level of Output
STAT	Symbolic process state. The state is given by a sequence of letters. The first letter indicates the run state of the process: • **D**—In disk or other short-term, uninterruptible wait • **I**—Idle (sleeping longer than about 20 seconds) • **R**—Runnable • **S**—Sleeping for less than 20 seconds • **T**—Stopped • **Z**—Dead (zombie) • **+** —The process is in the foreground process group of its control terminal. • **<**—The process has raised CPU scheduling priority. • **>**—The process has specified a soft limit on memory requirements and is currently exceeding that limit; such a process is not swapped. • **A**—The process requested random page replacement. • **E**—The process is trying to exit. • **L**—The process has pages locked in core. • **N**—The process has reduced CPU scheduling priority. • **S**—The process requested first-in, first-out (FIFO) page replacement. • **s**—The process is a session leader. • **V**—The process is temporarily suspended. • **W**—The process is swapped out. • **X**—The process is being traced or debugged.	none **detail**
UID	User identifier.	**detail**
USERNAME	Process owner.	**extensive summary**
PPID	Parent process identifier.	**detail**
CPU	(D)—Short-term CPU usage. (E and S)—Raw (unweighted) CPU usage. The value of this field is used to sort the processes in the output.	**detail extensive summary**
RSS	Resident set size.	**detail**
WCHAN	Symbolic name of the wait channel.	**detail**
STARTED	Local time when the process started running.	**detail**
PRI	Current priority of the process. A lower number indicates a higher priority.	**detail extensive summary**
NI or NICE	UNIX "niceness" value. A lower number indicates a higher priority.	**detail extensive summary**
SIZE	Total size of the process (text, data, and stack), in kilobytes.	**extensive summary**

Table 9: show system processes Output Fields *(continued)*

Field Name	Field Description	Level of Output
RES	Current amount of resident memory, in kilobytes.	**extensive summary**
STATE	Current state of the process (for example, **sleep**, **wait**, **run**, **idle**, **zombie**, or **stop**).	**extensive summary**
TIME	(S)—Number of system and user CPU seconds that the process has used. (None, D, and E)—Total amount of time that the command has been running.	**detail extensive summary**
WCPU	Weighted CPU usage.	**extensive summary**
COMMAND	Command that is currently running.	**detail extensive summary**

Sample Output

show system processes

```
user@host> show system processes
PID  TT  STAT      TIME COMMAND
    0  ??  DLs    0:00.70  (swapper)
    1  ??  Is     0:00.35 /sbin/init --
    2  ??  DL     0:00.00  (pagedaemon)
    3  ??  DL     0:00.00  (vmdaemon)
    4  ??  DL     0:42.37  (update)
    5  ??  DL     0:00.00  (if_jnx)
   80  ??  Ss     0:14.66 syslogd -s
   96  ??  Is     0:00.01 portmap
  128  ??  Is     0:02.70 cron
  173  ??  Is     0:02.24 /usr/local/sbin/sshd (sshd1)
  189  ??  S      0:03.80 /sbin/watchdog -t180
  190  ??  I      0:00.03 /usr/sbin/tnetd -N
  191  ??  S      2:24.76 /sbin/ifd -N
  192  ??  S<     0:55.44 /usr/sbin/xntpd -N
  195  ??  S      0:53.11 /usr/sbin/snmpd -N
  196  ??  S      1:15.73 /usr/sbin/mib2d -N
  198  ??  I      0:00.75 /usr/sbin/inetd -N
 2677  ??  I      0:00.01 /usr/sbin/mgd -N
 2712  ??  Ss     0:00.24 rlogind
 2735  ??  R      0:00.00 /bin/ps -ax
 1985  p0- S      0:07.41 ./rpd -N
 2713  p0  Is     0:00.24 -tcsh (tcsh)
 2726  p0  S+     0:00.07 cli
```

show system processes brief

```
user@host> show system processes brief
last pid:   543;  load averages:  0.00,  0.00,  0.00    18:29:47
37 processes:  1 running, 36 sleeping

Mem: 25M Active, 3976K Inact, 19M Wired, 8346K Buf, 202M Free
Swap: 528M Total, 64K Used, 528M Free
```

show system processes detail

```
user@host> show system processes detail
PID   UID  PPID CPU PRI NI  RSS WCHAN  STARTED   TT  STAT      TIME COMMAND
 3151  1049  3129   2  28  0  672 -       1:13PM   p0  R+     0:00.00 ps -ax -r
    1     0     0   0  10  0  376 wait    1:51PM   ??  Is     0:00.29 /sbin/ini
    2     0     0   0 -18  0   12 psleep  1:51PM   ??  DL     0:00.00  (pagedae
    3     0     0   0  28  0   12 psleep  1:51PM   ??  DL     0:00.00  (vmdaemo
    4     0     0   0  28  0   12 update  1:51PM   ??  DL     0:07.15  (update)
    5     0     0   0   2  0   12 pfesel  1:51PM   ??  IL     0:02.90  (if_pfe)
   27     0     1   0  10  0 17936 mfsidl  1:51PM  ??  Is     0:00.46 mfs /dev/
   81     0     1   0   2  0  496 select  1:52PM   ??  Ss     0:31.21 syslogd -
  119     1     1   0   2  0  492 select  1:52PM   ??  Is     0:00.00 portmap
  134     0     1   0   2  0  580 select  1:52PM   ??  S      0:02.95 amd -p -a
  151     0     1   0  18  0  532 pause   1:52PM   ??  Is     0:00.34 cron
  183     0     1   0   2  0  420 select  1:52PM   ??  Ss     0:00.07 /usr/loca
  206     0     1   0  18  0   72 pause   1:52PM   ??  S      0:00.51 /sbin/wat
  207     0     1   0   2  0  520 select  1:52PM   ??  I      0:00.16 /usr/sbin
  208     0     1   0   2  0  536 select  1:52PM   ??  S      0:08.21 /sbin/dcd
  210     0     1 255   2 -12  740 select  1:52PM  ??  S<     0:05.83 /usr/sbin
  211     0     1   0   2  0  376 select  1:52PM   ??  S      0:00.03 /usr/sbin
  215     0     1   0   2  0  548 select  1:52PM   ??  I      0:00.50 /usr/sbin
  219     0     1   0   3  0  540 ttyin   1:52PM   v0  Is+    0:00.02 /usr/libe
  220     0     1   0   3  0  540 ttyin   1:52PM   v1  Is+    0:00.01 /usr/libe
  221     0     1   0   3  0  540 ttyin   1:52PM   v2  Is+    0:00.01 /usr/libe
```

```
  222     0     1   0   3  0  540 ttyin   1:52PM   v3  Is+    0:00.01 /usr/libe
  735     0     1   0   2  0  468 select  2:47PM   ??  S      0:19.14 /usr/sbin
  736     0     1   0   2  0  212 select  2:47PM   ??  S      0:14.13 /usr/sbin
 1380     0     1   0   3  0  888 ttyin   7:32PM   d0  Is+    0:00.46 bash
 3019     0   207   0   2  0  636 select 10:49AM   ??  Ss     0:02.93 tnp.chass
 3122     0  1380   0   2  0 1764 select 12:33PM   d0  S      0:00.77 ./rpd -N
 3128     0   215   0   2  0  580 select 12:45PM   ??  Ss     0:00.12 rlogind
 3129  1049  3128   0  18  0  944 pause  12:45PM   p0  Ss     0:00.14 -tcsh (tc
    0     0     0   0 -18  0    0 sched   1:51PM   ??  DLs    0:00.10  (swapper
```

show system processes extensive

```
user@host> show system processes extensive
last pid:   544;  load averages:  0.00,  0.00,  0.00    18:30:33
37 processes:  1 running, 36 sleeping

Mem: 25M Active, 3968K Inact, 19M Wired, 8346K Buf, 202M Free
Swap: 528M Total, 64K Used, 528M Free
  PID USERNAME PRI NICE SIZE    RES STATE    TIME   WCPU    CPU COMMAND
  544 root      30   0   604K   768K RUN      0:00  0.00%  0.00% top
    3 root      28   0     0K    12K psleep   0:00  0.00%  0.00% vmdaemon
    4 root      28   0     0K    12K update   0:03  0.00%  0.00% update
  528 aviva     18   0   660K   948K pause    0:00  0.00%  0.00% tcsh
  204 root      18   0   300K   544K pause    0:00  0.00%  0.00% csh
  131 root      18   0   332K   532K pause    0:00  0.00%  0.00% cron
  186 root      18   0   196K    68K pause    0:00  0.00%  0.00% watchdog
   27 root      10   0   512M 16288K mfsidl   0:00  0.00%  0.00% mount_mfs
    1 root      10   0   620K   344K wait     0:00  0.00%  0.00% init
  304 root       3   0   884K   900K ttyin    0:00  0.00%  0.00% bash
  200 root       3   0   180K   540K ttyin    0:00  0.00%  0.00% getty
  203 root       3   0   180K   540K ttyin    0:00  0.00%  0.00% getty
  202 root       3   0   180K   540K ttyin    0:00  0.00%  0.00% getty
  201 root       3   0   180K   540K ttyin    0:00  0.00%  0.00% getty
  194 root       2   0  2248K  1640K select   0:11  0.00%  0.00% rpd
  205 root       2   0   964K   800K select   0:12  0.00%  0.00% tnp.chassisd
  189 root       2 -12   352K   740K select   0:03  0.00%  0.00% xntpd
  114 root       2   0   296K   612K select   0:00  0.00%  0.00% amd
  188 root       2   0   780K   600K select   0:00  0.00%  0.00% dcd
  527 root       2   0   176K   580K select   0:00  0.00%  0.00% rlogind
  195 root       2   0   212K   552K select   0:00  0.00%  0.00% inetd
  187 root       2   0   192K   532K select   0:00  0.00%  0.00% tnetd
   83 root       2   0   188K   520K select   0:00  0.00%  0.00% syslogd
  538 root       2   0  1324K   516K select   0:00  0.00%  0.00% mgd
   99 daemon     2   0   176K   492K select   0:00  0.00%  0.00% portmap
  163 root       2   0   572K   420K select   0:00  0.00%  0.00% nsrexecd
  192 root       2   0   560K   400K select   0:10  0.00%  0.00% snmpd
  191 root       2   0  1284K   376K select   0:00  0.00%  0.00% mgd
  537 aviva      2   0   636K   364K select   0:00  0.00%  0.00% cli
  193 root       2   0   312K   204K select   0:07  0.00%  0.00% mib2d
    5 root       2   0     0K    12K pfesel   0:00  0.00%  0.00% if_pfe
    2 root     -18   0     0K    12K psleep   0:00  0.00%  0.00% pagedaemon
    0 root     -18   0     0K     0K sched    0:00  0.00%  0.00% swapper
```

show system processes lcc wide (TX Matrix Routing Matrix)

```
user@host> show system processes lcc 2 wide
lcc2-re0:
--------------------------------------------------------------------------
  PID  TT  STAT      TIME COMMAND
    0  ??  DLs    0:00.00  (swapper)
    1  ??  ILs    0:00.10 /sbin/preinit -- (init)
    2  ??  DL     0:00.00  (pagedaemon)
    3  ??  DL     0:00.00  (vmdaemon)
    4  ??  DL     0:00.00  (bufdaemon)
```

```
    5  ??  DL     0:00.04  (syncer)
    6  ??  DL     0:00.00  (netdaemon)
    7  ??  IL     0:00.00  (if_pic_listen)
    8  ??  IL     0:00.00  (scs_housekeeping)
    9  ??  IL     0:00.00  (if_pfe_listen)
   10  ??  DL     0:00.00  (vmuncachedaemon)
   11  ??  SL     0:00.02  (cb_poll)
  172  ??  ILs    0:00.21 mfs -o noauto /dev/ad1s1b /tmp (newfs)
 2909  ??  Is     0:00.00 pccardd
 2932  ??  Ss     0:00.07 syslogd -r -s
 3039  ??  Is     0:00.00 cron
 3217  ??  I      0:00.00 /sbin/watchdog -d
 3218  ??  I      0:00.02 /usr/sbin/tnetd -N
 3221  ??  S      0:00.11 /usr/sbin/alarmd -N
 3222  ??  S      0:00.85 /usr/sbin/craftd -N
 3223  ??  S      0:00.05 /usr/sbin/mgd -N
 3224  ??  I      0:00.02 /usr/sbin/inetd -N
 3225  ??  I      0:00.00 /usr/sbin/tnp.sntpd -N
 3226  ??  I      0:00.01 /usr/sbin/tnp.sntpc -N
 3228  ??  I      0:00.01 /usr/sbin/smartd -N
 3231  ??  I      0:00.01 /usr/sbin/eccd -N
 3425  ??  S      0:00.09 /usr/sbin/dfwd -N
 3426  ??  S      0:00.19 /sbin/dcd -N
 3427  ??  I      0:00.04 /usr/sbin/pfed -N
 3430  ??  S      0:00.10 /usr/sbin/ksyncd -N
 3482  ??  S      1:53.63 /usr/sbin/chassisd -N
 4285  ??  SL     0:00.01  (peer proxy)
 4286  ??  SL     0:00.00  (peer proxy)
 4303  ??  Ss     0:00.00 mgd: (mgd) (root) (mgd)
 4304  ??  R      0:00.00 /bin/ps -ax -ww
 3270  d0  Is+    0:00.00 /usr/libexec/getty std.9600 ttyd0
```

show system processes summary

```
user@host> show system processes summary
last pid:   543;  load averages:  0.00,  0.00,  0.00    18:29:47
37 processes:  1 running, 36 sleeping

Mem: 25M Active, 3976K Inact, 19M Wired, 8346K Buf, 202M Free
Swap: 528M Total, 64K Used, 528M Free

  PID USERNAME PRI NICE SIZE    RES STATE    TIME   WCPU    CPU COMMAND
  527 root      2   0   176K   580K select   0:00  0.04%  0.04% rlogind
  543 root     30   0   604K   768K RUN      0:00  0.00%  0.00% top
```

show system processes (TX Matrix Plus Router)

```
user@host> show system processes
sfc0-re0:
--------------------------------------------------------------------------
  PID  TT  STAT      TIME COMMAND
    0  ??  WLs    0:00.00 [swapper]
    1  ??  ILs    0:00.18 /packages/mnt/jbase/sbin/init --
    2  ??  DL     0:00.20 [g_event]
    3  ??  DL     0:00.39 [g_up]
    4  ??  DL     0:00.32 [g_down]
    5  ??  DL     0:00.00 [thread taskq]
    6  ??  DL     0:00.09 [kqueue taskq]
    7  ??  DL     0:00.01 [pagedaemon]
    8  ??  DL     0:00.00 [vmdaemon]
    9  ??  DL     0:06.63 [pagezero]
   10  ??  DL     0:00.00 [ktrace]
   11  ??  RL   310:52.98 [idle]
   12  ??  WL     0:11.03 [swi2: net]
```

```
   13  ??  WL     0:27.58 [swi7: clock sio]
   14  ??  WL     0:00.00 [swi6: vm]
   15  ??  DL     0:03.02 [yarrow]
   16  ??  WL     0:00.00 [swi9: +]
   17  ??  WL     0:00.00 [swi8: +]
   18  ??  WL     0:00.00 [swi5: cambio]
   19  ??  WL     0:00.00 [swi9: task queue]
   20  ??  WL     0:11.41 [irq16: uhci0 uhci*]
   21  ??  DL     0:00.00 [usb0]
   22  ??  DL     0:00.00 [usbtask]
   23  ??  WL     0:39.51 [irq17: uhci1 uhci*]
   24  ??  DL     0:00.00 [usb1]
   25  ??  WL     0:00.00 [irq18: uhci2 uhci*]
   26  ??  DL     0:00.83 [usb2]
   27  ??  DL     0:00.00 [usb3]
   28  ??  DL     0:00.00 [usb4]
   29  ??  DL     0:00.00 [usb5]
   30  ??  DL     0:00.73 [usb6]
   31  ??  DL     0:00.00 [usb7]
   32  ??  WL     0:00.00 [irq14: ata0]
   33  ??  WL     0:00.00 [irq15: ata1]
   34  ??  WL     0:00.00 [irq1: atkbd0]
   35  ??  WL     0:00.00 [swi0: sio]
   36  ??  WL     0:00.00 [irq11: isab0]
   37  ??  WL     0:00.00 [swi3: ip6opt ipopt]
   38  ??  WL     0:00.00 [swi4: ip6mismatch+]
   39  ??  WL     0:00.00 [swi1: ipfwd]
   40  ??  DL     0:00.02 [bufdaemon]
   41  ??  DL     0:00.02 [vnlru]
   42  ??  DL     0:00.39 [syncer]
   43  ??  DL     0:00.05 [softdepflush]
   44  ??  DL     0:00.00 [netdaemon]
   45  ??  DL     0:00.02 [vmuncachedaemon]
   46  ??  DL     0:00.00 [if_pic_listen]
   47  ??  DL     0:00.35 [vmkmemdaemon]
   48  ??  DL     0:00.00 [cb_poll]
   49  ??  DL     0:00.06 [if_pfe_listen]
   50  ??  DL     0:00.00 [scs_housekeeping]
   51  ??  IL     0:00.00 [kern_dump_proc]
   52  ??  IL     0:00.00 [nfsiod 0]
   53  ??  IL     0:00.00 [nfsiod 1]
   54  ??  IL     0:00.00 [nfsiod 2]
   55  ??  IL     0:00.00 [nfsiod 3]
   56  ??  DL     0:00.37 [schedcpu]
   57  ??  DL     0:00.56 [md0]
   79  ??  DL     0:02.58 [md1]
  100  ??  DL     0:00.03 [md2]
  118  ??  DL     0:00.01 [md3]
  139  ??  DL     0:00.95 [md4]
  160  ??  DL     0:00.12 [md5]
  181  ??  DL     0:00.00 [md6]
  217  ??  DL     0:00.02 [md7]
  227  ??  DL     0:00.05 [md8]
 1341  ??  SL     0:01.34 [bcmTX]
 1342  ??  SL     0:01.68 [bcmXGS3AsyncTX]
 1343  ??  SL     0:41.40 [bcmLINK.0]
 1345  ??  SL     0:33.83 [bcmLINK.1]
 1350  ??  Is     0:00.01 /usr/sbin/cron
 1502  ??  S      0:00.01 /sbin/watchdog -t-1
 1503  ??  S      0:00.86 /usr/libexec/bslockd -mp -N
 1504  ??  S      0:00.01 /usr/sbin/tnetd -N
```

```
 1507  ??  S      0:01.32 /usr/sbin/alarmd -N
 1508  ??  S      0:14.54 /usr/sbin/craftd -N
 1509  ??  S      0:01.19 /usr/sbin/mgd -N
 1512  ??  I      0:00.05 /usr/sbin/inetd -N
 1513  ??  S      0:00.10 /usr/sbin/tnp.sntpd -N
 1517  ??  S      0:00.11 /usr/sbin/smartd -N
 1525  ??  S      0:01.10 /usr/sbin/idpd -N
 1526  ??  S      0:01.43 /usr/sbin/license-check -U -M -p 10 -i 10
 1527  ??  I      0:00.01 /usr/libexec/getty Pc ttyv0
 1616  ??  DL     0:00.30 [peer proxy]
 1617  ??  DL     0:00.32 [peer proxy]
 1618  ??  DL     0:00.34 [peer proxy]
 1619  ??  DL     0:00.30 [peer proxy]
 2391  ??  Is     0:00.01 telnetd
 7331  ??  Ss     0:00.03 telnetd
 9538  ??  DL     0:01.16 [jsr_kkcm]
 9613  ??  DL     0:00.18 [peer proxy]
23781  ??  Ss     0:00.01 telnetd
23926  ??  Ss     0:00.01 mgd: (mgd) (regress)/dev/ttyp2 (mgd)
36867  ??  S      0:03.14 /usr/sbin/rpd -N
36874  ??  S      0:00.08 /usr/sbin/lmpd
36876  ??  S      0:00.17 /usr/sbin/lacpd -N
36877  ??  S      0:00.15 /usr/sbin/bfdd -N
36878  ??  S      0:05.05 /usr/sbin/ppmd -N
36907  ??  S      0:25.07 /usr/sbin/chassisd -N
37775  ??  S      0:00.01 /usr/sbin/bdbrepd -N
45727  ??  S      0:00.02 /usr/sbin/xntpd -j -N -g (ntpd)
45729  ??  S      0:00.38 /usr/sbin/l2ald -N
45730  ??  S<     0:00.12 /usr/sbin/apsd -N
45731  ??  SN     0:00.10 /usr/sbin/sampled -N
45732  ??  S      0:00.03 /usr/sbin/ilmid -N
45733  ??  S      0:00.09 /usr/sbin/rmopd -N
45734  ??  S      0:00.30 /usr/sbin/cosd
45735  ??  I      0:00.00 /usr/sbin/rtspd -N
45736  ??  S      0:00.06 /usr/sbin/fsad -N
45737  ??  S      0:00.05 /usr/sbin/rdd -N
45738  ??  S      0:00.10 /usr/sbin/pppd -N
45739  ??  S      0:00.05 /usr/sbin/dfcd -N
45740  ??  S      0:00.07 /usr/sbin/lfmd -N
45741  ??  S      0:00.01 /usr/sbin/mplsoamd -N
45742  ??  I      0:00.01 /usr/sbin/sendd -N
45743  ??  S      0:00.08 /usr/sbin/appidd -N
45744  ??  S      0:00.05 /usr/sbin/mspd -N
45745  ??  S      0:00.25 /usr/sbin/jdiameterd -N
45746  ??  S      0:00.10 /usr/sbin/pfed -N
45747  ??  S      0:00.19 /usr/sbin/lpdfd -N
45748  ??  S      0:00.63 /sbin/dcd -N
45750  ??  S      0:00.45 /usr/sbin/mib2d -N
45751  ??  S      0:00.15 /usr/sbin/dfwd -N
45752  ??  S      0:00.15 /usr/sbin/irsd -N
45764  ??  S      0:20.59 /usr/sbin/snmpd -N
56479  ??  Ss     0:00.00 mgd: (mgd) (root) (mgd)
56480  ??  R      0:00.00 /bin/ps -ax
 1142  d0- I      0:00.01 /usr/sbin/usbd -N
 1160  d0- S      0:29.17 /usr/sbin/eventd -N -r -s -A
 6527  d0  Is+    0:00.00 /usr/libexec/getty std.9600 ttyd0
 2392  p1  Is     0:00.00 login [pam] (login)
 2393  p1  I      0:00.00 -csh (csh)
 2394  p1  I      0:00.00 su -
 2395  p1  I+     0:00.01 -su (csh)
23782  p2  Is     0:00.00 login [pam] (login)
```

```
23881  p2  I      0:00.00 -csh (csh)
23925  p2  S+     0:00.03 cli
 7332  p3  Is     0:00.00 login [pam] (login)
 7333  p3  I      0:00.00 -csh (csh)
23780  p3  S+     0:00.02 telnet aj

lcc0-re0:
--------------------------------------------------------------------------
  PID  TT  STAT      TIME COMMAND
    0  ??  WLs    0:00.00 [swapper]
    1  ??  ILs    0:00.16 /packages/mnt/jbase/sbin/init --
    2  ??  DL     0:00.01 [g_event]
    3  ??  DL     0:00.16 [g_up]
    4  ??  DL     0:00.11 [g_down]
    5  ??  DL     0:00.00 [thread taskq]
    6  ??  DL     0:00.00 [kqueue taskq]
    7  ??  DL     0:00.00 [pagedaemon]
    8  ??  DL     0:00.00 [vmdaemon]
    9  ??  DL     0:01.77 [pagezero]
   10  ??  DL     0:00.00 [ktrace]
   11  ??  RL    17:22.31 [idle]
   12  ??  WL     0:00.32 [swi2: net]
   13  ??  WL     0:01.21 [swi7: clock sio]
   14  ??  WL     0:00.00 [swi6: vm]
   15  ??  DL     0:00.10 [yarrow]
   16  ??  WL     0:00.00 [swi9: +]
   17  ??  WL     0:00.00 [swi8: +]
   18  ??  WL     0:00.00 [swi5: cambio]
   19  ??  WL     0:00.00 [swi9: task queue]
   20  ??  WL     0:02.73 [irq10: bcm0 uhci1*]
   21  ??  WL     0:00.02 [irq11: cb0 uhci0+*]
   22  ??  DL     0:00.00 [usb0]
   23  ??  DL     0:00.00 [usbtask]
   24  ??  DL     0:00.00 [usb1]
   25  ??  DL     0:00.05 [usb2]
   26  ??  DL     0:00.00 [usb3]
   27  ??  DL     0:00.00 [usb4]
   28  ??  DL     0:00.00 [usb5]
   29  ??  DL     0:00.04 [usb6]
   30  ??  DL     0:00.00 [usb7]
   31  ??  WL     0:00.00 [irq14: ata0]
   32  ??  WL     0:00.00 [irq15: ata1]
   33  ??  WL     0:00.00 [irq1: atkbd0]
   34  ??  WL     0:00.00 [swi0: sio]
   35  ??  WL     0:00.00 [swi3: ip6opt ipopt]
   36  ??  WL     0:00.00 [swi4: ip6mismatch+]
   37  ??  WL     0:00.00 [swi1: ipfwd]
   38  ??  DL     0:00.00 [bufdaemon]
   39  ??  DL     0:00.00 [vnlru]
   40  ??  DL     0:00.01 [syncer]
   41  ??  DL     0:00.00 [softdepflush]
   42  ??  DL     0:00.00 [netdaemon]
   43  ??  DL     0:00.00 [vmuncachedaemon]
   44  ??  DL     0:00.00 [if_pic_listen]
   45  ??  DL     0:00.02 [vmkmemdaemon]
   46  ??  DL     0:00.01 [cb_poll]
   47  ??  DL     0:00.00 [if_pfe_listen]
   48  ??  DL     0:00.00 [scs_housekeeping]
   49  ??  IL     0:00.00 [kern_dump_proc]
   50  ??  IL     0:00.00 [nfsiod 0]
   51  ??  IL     0:00.00 [nfsiod 1]
```

```
   52  ??  IL     0:00.00 [nfsiod 2]
   53  ??  IL     0:00.00 [nfsiod 3]
   54  ??  DL     0:00.01 [schedcpu]
   55  ??  DL     0:00.73 [md0]
   77  ??  DL     0:03.54 [md1]
   98  ??  DL     0:00.37 [md2]
  116  ??  DL     0:00.02 [md3]
  137  ??  DL     0:00.56 [md4]
  158  ??  DL     0:00.15 [md5]
  179  ??  DL     0:00.00 [md6]
  215  ??  DL     0:00.03 [md7]
  225  ??  DL     0:00.03 [md8]
 1078  ??  DL     0:00.00 [jsr_kkcm]
 1363  ??  SL     0:00.09 [bcmTX]
 1364  ??  SL     0:00.10 [bcmXGS3AsyncTX]
 1365  ??  SL     0:03.08 [bcmLINK.0]
 1370  ??  Is     0:00.00 /usr/sbin/cron
 1522  ??  S      0:00.00 /sbin/watchdog -t-1
 1523  ??  S      0:00.05 /usr/libexec/bslockd -mp -N
 1524  ??  I      0:00.01 /usr/sbin/tnetd -N
 1526  ??  S      0:04.98 /usr/sbin/chassisd -N
 1527  ??  S      0:00.04 /usr/sbin/alarmd -N
 1528  ??  I      0:00.40 /usr/sbin/craftd -N
 1529  ??  S      0:00.08 /usr/sbin/mgd -N
 1532  ??  I      0:00.04 /usr/sbin/inetd -N
 1533  ??  I      0:00.00 /usr/sbin/tnp.sntpd -N
 1534  ??  I      0:00.00 /usr/sbin/tnp.sntpc -N
 1536  ??  S      0:00.01 /usr/sbin/smartd -N
 1540  ??  I      0:00.07 /usr/sbin/jcsd -N
 1541  ??  S      0:00.11 /usr/sbin/idpd -N
 1542  ??  I      0:00.00 /usr/libexec/getty Pc ttyv0
 2089  ??  DL     0:00.01 [peer proxy]
 2090  ??  DL     0:00.01 [peer proxy]
 2091  ??  DL     0:00.01 [peer proxy]
 2657  ??  S      0:00.02 /usr/sbin/dfwd -N
 2658  ??  S      0:00.02 /sbin/dcd -N
 2659  ??  S      0:00.05 /usr/sbin/snmpd -N
 2660  ??  S      0:00.01 /usr/sbin/mib2d -N
 2661  ??  S      0:00.01 /usr/sbin/pfed -N
 2662  ??  S      0:00.01 /usr/sbin/irsd -N
 2667  ??  S      0:00.13 /usr/sbin/ksyncd -N
 2690  ??  Ss     0:00.00 mgd: (mgd) (root) (mgd)
 2691  ??  R      0:00.00 /bin/ps -ax
 1164  d0- S      0:00.00 /usr/sbin/usbd -N
 1182  d0- S      0:00.34 /usr/sbin/eventd -N -r -s -A
 1543  d0  Is+    0:00.00 /usr/libexec/getty std.9600 ttyd0

lcc1-re0:
--------------------------------------------------------------------------
  PID  TT  STAT      TIME COMMAND
    0  ??  WLs    0:00.00 [swapper]
    1  ??  ILs    0:00.17 /packages/mnt/jbase/sbin/init --
    2  ??  DL     0:00.01 [g_event]
    3  ??  DL     0:00.16 [g_up]
    4  ??  DL     0:00.11 [g_down]
    5  ??  DL     0:00.00 [thread taskq]
    6  ??  DL     0:00.00 [kqueue taskq]
    7  ??  DL     0:00.00 [pagedaemon]
    8  ??  DL     0:00.00 [vmdaemon]
    9  ??  DL     0:01.77 [pagezero]
   10  ??  DL     0:00.00 [ktrace]
```

```
   11  ??  RL    17:22.83 [idle]
   12  ??  WL     0:00.35 [swi2: net]
   13  ??  WL     0:01.20 [swi7: clock sio]
   14  ??  WL     0:00.00 [swi6: vm]
   15  ??  DL     0:00.10 [yarrow]
   16  ??  WL     0:00.00 [swi9: +]
   17  ??  WL     0:00.00 [swi8: +]
   18  ??  WL     0:00.00 [swi5: cambio]
   19  ??  WL     0:00.00 [swi9: task queue]
   20  ??  WL     0:02.87 [irq10: bcm0 uhci1*]
   21  ??  WL     0:00.02 [irq11: cb0 uhci0+*]
   22  ??  DL     0:00.00 [usb0]
   23  ??  DL     0:00.00 [usbtask]
   24  ??  DL     0:00.00 [usb1]
   25  ??  DL     0:00.05 [usb2]
   26  ??  DL     0:00.00 [usb3]
   27  ??  DL     0:00.00 [usb4]
   28  ??  DL     0:00.00 [usb5]
   29  ??  DL     0:00.04 [usb6]
   30  ??  DL     0:00.00 [usb7]
   31  ??  WL     0:00.00 [irq14: ata0]
   32  ??  WL     0:00.00 [irq15: ata1]
   33  ??  WL     0:00.00 [irq1: atkbd0]
   34  ??  WL     0:00.00 [swi0: sio]
   35  ??  WL     0:00.00 [swi3: ip6opt ipopt]
   36  ??  WL     0:00.00 [swi4: ip6mismatch+]
   37  ??  WL     0:00.00 [swi1: ipfwd]
   38  ??  DL     0:00.00 [bufdaemon]
   39  ??  DL     0:00.00 [vnlru]
   40  ??  DL     0:00.01 [syncer]
   41  ??  DL     0:00.00 [softdepflush]
   42  ??  DL     0:00.00 [netdaemon]
   43  ??  DL     0:00.00 [vmuncachedaemon]
   44  ??  DL     0:00.00 [if_pic_listen]
   45  ??  DL     0:00.02 [vmkmemdaemon]
   46  ??  DL     0:00.01 [cb_poll]
   47  ??  DL     0:00.00 [if_pfe_listen]
   48  ??  DL     0:00.00 [scs_housekeeping]
   49  ??  IL     0:00.00 [kern_dump_proc]
   50  ??  IL     0:00.00 [nfsiod 0]
   51  ??  IL     0:00.00 [nfsiod 1]
   52  ??  IL     0:00.00 [nfsiod 2]
   53  ??  IL     0:00.00 [nfsiod 3]
   54  ??  DL     0:00.02 [schedcpu]
   55  ??  DL     0:00.75 [md0]
   77  ??  DL     0:03.40 [md1]
   98  ??  DL     0:00.37 [md2]
  116  ??  DL     0:00.02 [md3]
  137  ??  DL     0:00.56 [md4]
  158  ??  DL     0:00.15 [md5]
  179  ??  DL     0:00.00 [md6]
  215  ??  DL     0:00.03 [md7]
  225  ??  DL     0:00.03 [md8]
 1052  ??  DL     0:00.00 [jsr_kkcm]
 1337  ??  SL     0:00.09 [bcmTX]
 1338  ??  SL     0:00.10 [bcmXGS3AsyncTX]
 1339  ??  SL     0:03.10 [bcmLINK.0]
 1344  ??  Is     0:00.00 /usr/sbin/cron
 1496  ??  S      0:00.00 /sbin/watchdog -t-1
 1497  ??  S      0:00.05 /usr/libexec/bslockd -mp -N
 1498  ??  I      0:00.01 /usr/sbin/tnetd -N
```

```
 1500  ??  S      0:04.97 /usr/sbin/chassisd -N
 1501  ??  S      0:00.04 /usr/sbin/alarmd -N
 1502  ??  I      0:00.40 /usr/sbin/craftd -N
 1503  ??  S      0:00.08 /usr/sbin/mgd -N
 1506  ??  I      0:00.04 /usr/sbin/inetd -N
 1507  ??  I      0:00.00 /usr/sbin/tnp.sntpd -N
 1508  ??  I      0:00.00 /usr/sbin/tnp.sntpc -N
 1510  ??  S      0:00.01 /usr/sbin/smartd -N
 1514  ??  I      0:00.07 /usr/sbin/jcsd -N
 1515  ??  S      0:00.18 /usr/sbin/idpd -N
 1516  ??  I      0:00.00 /usr/libexec/getty Pc ttyv0
 2068  ??  DL     0:00.01 [peer proxy]
 2069  ??  DL     0:00.01 [peer proxy]
 2070  ??  DL     0:00.01 [peer proxy]
 2666  ??  S      0:00.02 /sbin/dcd -N
 2667  ??  S      0:00.01 /usr/sbin/irsd -N
 2668  ??  S      0:00.01 /usr/sbin/pfed -N
 2669  ??  S      0:00.05 /usr/sbin/snmpd -N
 2670  ??  S      0:00.01 /usr/sbin/mib2d -N
 2671  ??  S      0:00.02 /usr/sbin/dfwd -N
 2675  ??  S      0:00.13 /usr/sbin/ksyncd -N
 2699  ??  Ss     0:00.00 mgd: (mgd) (root) (mgd)
 2700  ??  R      0:00.00 /bin/ps -ax
 1138  d0- S      0:00.00 /usr/sbin/usbd -N
 1156  d0- S      0:00.37 /usr/sbin/eventd -N -r -s -A
 1517  d0  Is+    0:00.00 /usr/libexec/getty std.9600 ttyd0

lcc2-re0:
--------------------------------------------------------------------------
  PID  TT  STAT      TIME COMMAND
    0  ??  WLs    0:00.00 [swapper]
    1  ??  ILs    0:00.18 /packages/mnt/jbase/sbin/init --
    2  ??  DL     0:00.01 [g_event]
    3  ??  DL     0:00.17 [g_up]
    4  ??  DL     0:00.12 [g_down]
    5  ??  DL     0:00.00 [thread taskq]
    6  ??  DL     0:00.00 [kqueue taskq]
    7  ??  DL     0:00.00 [pagedaemon]
    8  ??  DL     0:00.00 [vmdaemon]
    9  ??  DL     0:01.77 [pagezero]
   10  ??  DL     0:00.00 [ktrace]
   11  ??  RL    17:19.13 [idle]
   12  ??  WL     0:00.36 [swi2: net]
   13  ??  WL     0:01.20 [swi7: clock sio]
   14  ??  WL     0:00.00 [swi6: vm]
   15  ??  DL     0:00.13 [yarrow]
   16  ??  WL     0:00.00 [swi9: +]
   17  ??  WL     0:00.00 [swi8: +]
   18  ??  WL     0:00.00 [swi5: cambio]
   19  ??  WL     0:00.00 [swi9: task queue]
   20  ??  WL     0:03.03 [irq10: bcm0 uhci1*]
   21  ??  WL     0:00.02 [irq11: cb0 uhci0+*]
   22  ??  DL     0:00.00 [usb0]
   23  ??  DL     0:00.00 [usbtask]
   24  ??  DL     0:00.00 [usb1]
   25  ??  DL     0:00.05 [usb2]
   26  ??  DL     0:00.00 [usb3]
   27  ??  DL     0:00.00 [usb4]
   28  ??  DL     0:00.00 [usb5]
   29  ??  DL     0:00.04 [usb6]
   30  ??  DL     0:00.00 [usb7]
```

```
   31  ??  WL     0:00.00 [irq14: ata0]
   32  ??  WL     0:00.00 [irq15: ata1]
   33  ??  WL     0:00.00 [irq1: atkbd0]
   34  ??  WL     0:00.00 [swi0: sio]
   35  ??  WL     0:00.00 [swi3: ip6opt ipopt]
   36  ??  WL     0:00.00 [swi4: ip6mismatch+]
   37  ??  WL     0:00.00 [swi1: ipfwd]
   38  ??  DL     0:00.00 [bufdaemon]
   39  ??  DL     0:00.00 [vnlru]
   40  ??  DL     0:00.01 [syncer]
   41  ??  DL     0:00.00 [softdepflush]
   42  ??  DL     0:00.00 [netdaemon]
   43  ??  DL     0:00.00 [vmuncachedaemon]
   44  ??  DL     0:00.00 [if_pic_listen]
   45  ??  DL     0:00.02 [vmkmemdaemon]
   46  ??  DL     0:00.01 [cb_poll]
   47  ??  DL     0:00.00 [if_pfe_listen]
   48  ??  DL     0:00.00 [scs_housekeeping]
   49  ??  IL     0:00.00 [kern_dump_proc]
   50  ??  IL     0:00.00 [nfsiod 0]
   51  ??  IL     0:00.00 [nfsiod 1]
   52  ??  IL     0:00.00 [nfsiod 2]
   53  ??  IL     0:00.00 [nfsiod 3]
   54  ??  DL     0:00.02 [schedcpu]
   55  ??  DL     0:00.75 [md0]
   77  ??  DL     0:03.48 [md1]
   98  ??  DL     0:00.59 [md2]
  116  ??  DL     0:00.02 [md3]
  137  ??  DL     0:00.56 [md4]
  158  ??  DL     0:00.15 [md5]
  179  ??  DL     0:00.00 [md6]
  215  ??  DL     0:00.03 [md7]
  225  ??  DL     0:00.03 [md8]
 1052  ??  DL     0:00.00 [jsr_kkcm]
 1337  ??  SL     0:00.09 [bcmTX]
 1338  ??  SL     0:00.10 [bcmXGS3AsyncTX]
 1339  ??  SL     0:03.22 [bcmLINK.0]
 1344  ??  Is     0:00.00 /usr/sbin/cron
 1496  ??  S      0:00.00 /sbin/watchdog -t-1
 1497  ??  S      0:00.05 /usr/libexec/bslockd -mp -N
 1498  ??  S      0:00.01 /usr/sbin/tnetd -N
 1500  ??  R      0:05.17 /usr/sbin/chassisd -N
 1501  ??  S      0:00.04 /usr/sbin/alarmd -N
 1502  ??  I      0:00.39 /usr/sbin/craftd -N
 1503  ??  S      0:00.08 /usr/sbin/mgd -N
 1506  ??  I      0:00.05 /usr/sbin/inetd -N
 1507  ??  I      0:00.00 /usr/sbin/tnp.sntpd -N
 1508  ??  I      0:00.00 /usr/sbin/tnp.sntpc -N
 1510  ??  S      0:00.01 /usr/sbin/smartd -N
 1514  ??  I      0:00.07 /usr/sbin/jcsd -N
 1515  ??  S      0:00.17 /usr/sbin/idpd -N
 1516  ??  I      0:00.00 /usr/libexec/getty Pc ttyv0
 2591  ??  DL     0:00.01 [peer proxy]
 2592  ??  DL     0:00.01 [peer proxy]
 2593  ??  DL     0:00.01 [peer proxy]
 2597  ??  DL     0:00.00 [peer proxy]
 3192  ??  S      0:00.01 /usr/sbin/irsd -N
 3193  ??  S      0:00.05 /usr/sbin/snmpd -N
 3194  ??  S      0:00.02 /sbin/dcd -N
 3195  ??  S      0:00.01 /usr/sbin/pfed -N
 3196  ??  S      0:00.01 /usr/sbin/mib2d -N
```

```
 3197  ??  S      0:00.02 /usr/sbin/dfwd -N
 3198  ??  S      0:00.13 /usr/sbin/ksyncd -N
 3228  ??  Ss     0:00.00 mgd: (mgd) (root) (mgd)
 3229  ??  R      0:00.00 /bin/ps -ax
 1138  d0- S      0:00.00 /usr/sbin/usbd -N
 1156  d0- S      0:00.42 /usr/sbin/eventd -N -r -s -A
 1517  d0  Is+    0:00.00 /usr/libexec/getty std.9600 ttyd0
...
```

show system processes sfc (TX Matrix Plus Router)

```
user@host> show system processes sfc 0
sfc0-re0:
--------------------------------------------------------------------------
  PID  TT  STAT      TIME COMMAND
    0  ??  WLs    0:00.00 [swapper]
    1  ??  SLs    0:00.18 /packages/mnt/jbase/sbin/init --
    2  ??  DL     0:00.20 [g_event]
    3  ??  DL     0:00.39 [g_up]
    4  ??  DL     0:00.32 [g_down]
    5  ??  DL     0:00.00 [thread taskq]
    6  ??  DL     0:00.09 [kqueue taskq]
    7  ??  DL     0:00.01 [pagedaemon]
    8  ??  DL     0:00.00 [vmdaemon]
    9  ??  DL     0:06.63 [pagezero]
   10  ??  DL     0:00.00 [ktrace]
   11  ??  RL   312:09.00 [idle]
   12  ??  WL     0:11.07 [swi2: net]
   13  ??  WL     0:27.70 [swi7: clock sio]
   14  ??  WL     0:00.00 [swi6: vm]
   15  ??  DL     0:03.03 [yarrow]
   16  ??  WL     0:00.00 [swi9: +]
   17  ??  WL     0:00.00 [swi8: +]
   18  ??  WL     0:00.00 [swi5: cambio]
   19  ??  WL     0:00.00 [swi9: task queue]
   20  ??  WL     0:11.46 [irq16: uhci0 uhci*]
   21  ??  DL     0:00.00 [usb0]
   22  ??  DL     0:00.00 [usbtask]
   23  ??  WL     0:39.63 [irq17: uhci1 uhci*]
   24  ??  DL     0:00.00 [usb1]
   25  ??  WL     0:00.00 [irq18: uhci2 uhci*]
   26  ??  DL     0:00.84 [usb2]
   27  ??  DL     0:00.00 [usb3]
   28  ??  DL     0:00.00 [usb4]
   29  ??  DL     0:00.00 [usb5]
   30  ??  DL     0:00.73 [usb6]
   31  ??  DL     0:00.00 [usb7]
   32  ??  WL     0:00.00 [irq14: ata0]
   33  ??  WL     0:00.00 [irq15: ata1]
   34  ??  WL     0:00.00 [irq1: atkbd0]
   35  ??  WL     0:00.00 [swi0: sio]
   36  ??  WL     0:00.00 [irq11: isab0]
   37  ??  WL     0:00.00 [swi3: ip6opt ipopt]
   38  ??  WL     0:00.00 [swi4: ip6mismatch+]
   39  ??  WL     0:00.00 [swi1: ipfwd]
   40  ??  DL     0:00.02 [bufdaemon]
   41  ??  DL     0:00.02 [vnlru]
   42  ??  DL     0:00.39 [syncer]
   43  ??  DL     0:00.05 [softdepflush]
   44  ??  DL     0:00.00 [netdaemon]
   45  ??  DL     0:00.02 [vmuncachedaemon]
   46  ??  DL     0:00.00 [if_pic_listen]
   47  ??  DL     0:00.35 [vmkmemdaemon]
```

```
   48  ??  DL     0:00.00 [cb_poll]
   49  ??  DL     0:00.06 [if_pfe_listen]
   50  ??  DL     0:00.00 [scs_housekeeping]
   51  ??  IL     0:00.00 [kern_dump_proc]
   52  ??  IL     0:00.00 [nfsiod 0]
   53  ??  IL     0:00.00 [nfsiod 1]
   54  ??  IL     0:00.00 [nfsiod 2]
   55  ??  IL     0:00.00 [nfsiod 3]
   56  ??  DL     0:00.37 [schedcpu]
   57  ??  DL     0:00.56 [md0]
   79  ??  DL     0:02.58 [md1]
  100  ??  DL     0:00.03 [md2]
  118  ??  DL     0:00.01 [md3]
  139  ??  DL     0:00.95 [md4]
  160  ??  DL     0:00.12 [md5]
  181  ??  DL     0:00.00 [md6]
  217  ??  DL     0:00.02 [md7]
  227  ??  DL     0:00.05 [md8]
 1341  ??  SL     0:01.35 [bcmTX]
 1342  ??  SL     0:01.69 [bcmXGS3AsyncTX]
 1343  ??  SL     0:41.57 [bcmLINK.0]
 1345  ??  SL     0:33.97 [bcmLINK.1]
 1350  ??  Is     0:00.01 /usr/sbin/cron
 1502  ??  S      0:00.01 /sbin/watchdog -t-1
 1503  ??  S      0:00.86 /usr/libexec/bslockd -mp -N
 1504  ??  I      0:00.01 /usr/sbin/tnetd -N
 1507  ??  S      0:01.32 /usr/sbin/alarmd -N
 1508  ??  S      0:14.54 /usr/sbin/craftd -N
 1509  ??  S      0:01.20 /usr/sbin/mgd -N
 1512  ??  S      0:00.05 /usr/sbin/inetd -N
 1513  ??  S      0:00.10 /usr/sbin/tnp.sntpd -N
 1517  ??  S      0:00.11 /usr/sbin/smartd -N
 1525  ??  S      0:01.11 /usr/sbin/idpd -N
 1526  ??  S      0:01.43 /usr/sbin/license-check -U -M -p 10 -i 10
 1527  ??  I      0:00.01 /usr/libexec/getty Pc ttyv0
 1616  ??  DL     0:00.30 [peer proxy]
 1617  ??  DL     0:00.32 [peer proxy]
 1618  ??  DL     0:00.34 [peer proxy]
 1619  ??  DL     0:00.30 [peer proxy]
 2391  ??  Is     0:00.01 telnetd
 7331  ??  Ss     0:00.03 telnetd
 9538  ??  DL     0:01.16 [jsr_kkcm]
 9613  ??  DL     0:00.18 [peer proxy]
23781  ??  Ss     0:00.01 telnetd
23926  ??  Ss     0:00.03 mgd: (mgd) (regress)/dev/ttyp2 (mgd)
36867  ??  S      0:03.14 /usr/sbin/rpd -N
36874  ??  S      0:00.08 /usr/sbin/lmpd
36876  ??  S      0:00.17 /usr/sbin/lacpd -N
36877  ??  S      0:00.15 /usr/sbin/bfdd -N
36878  ??  S      0:05.05 /usr/sbin/ppmd -N
36907  ??  S      0:26.63 /usr/sbin/chassisd -N
37775  ??  S      0:00.01 /usr/sbin/bdbrepd -N
45727  ??  S      0:00.02 /usr/sbin/xntpd -j -N -g (ntpd)
45729  ??  S      0:00.40 /usr/sbin/l2ald -N
45730  ??  S<     0:00.13 /usr/sbin/apsd -N
45731  ??  SN     0:00.10 /usr/sbin/sampled -N
45732  ??  S      0:00.03 /usr/sbin/ilmid -N
45733  ??  S      0:00.09 /usr/sbin/rmopd -N
45734  ??  S      0:00.31 /usr/sbin/cosd
45735  ??  I      0:00.00 /usr/sbin/rtspd -N
45736  ??  S      0:00.06 /usr/sbin/fsad -N
```

```
45737  ??  S      0:00.05 /usr/sbin/rdd -N
45738  ??  S      0:00.10 /usr/sbin/pppd -N
45739  ??  S      0:00.05 /usr/sbin/dfcd -N
45740  ??  S      0:00.08 /usr/sbin/lfmd -N
45741  ??  S      0:00.01 /usr/sbin/mplsoamd -N
45742  ??  I      0:00.01 /usr/sbin/sendd -N
45743  ??  S      0:00.08 /usr/sbin/appidd -N
45744  ??  S      0:00.05 /usr/sbin/mspd -N
45745  ??  S      0:00.27 /usr/sbin/jdiameterd -N
45746  ??  S      0:00.10 /usr/sbin/pfed -N
45747  ??  S      0:00.19 /usr/sbin/lpdfd -N
45748  ??  S      0:00.64 /sbin/dcd -N
45750  ??  S      0:00.46 /usr/sbin/mib2d -N
45751  ??  S      0:00.16 /usr/sbin/dfwd -N
45752  ??  S      0:00.15 /usr/sbin/irsd -N
45764  ??  S      0:20.60 /usr/sbin/snmpd -N
56481  ??  Ss     0:00.02 telnetd
56548  ??  Rs     0:00.19 mgd: (mgd) (regress)/dev/ttyp0 (mgd)
56577  ??  Ss     0:00.00 mgd: (mgd) (root) (mgd)
56578  ??  R      0:00.00 /bin/ps -ax
 1142  d0- S      0:00.01 /usr/sbin/usbd -N
 1160  d0- S      0:29.71 /usr/sbin/eventd -N -r -s -A
 6527  d0  Is+    0:00.00 /usr/libexec/getty std.9600 ttyd0
56482  p0  Is     0:00.00 login [pam] (login)
56483  p0  S      0:00.01 -csh (csh)
56547  p0  S+     0:00.02 cli
 2392  p1  Is     0:00.00 login [pam] (login)
 2393  p1  I      0:00.00 -csh (csh)
 2394  p1  I      0:00.00 su -
 2395  p1  I+     0:00.01 -su (csh)
23782  p2  Is     0:00.00 login [pam] (login)
23881  p2  I      0:00.00 -csh (csh)
23925  p2  S+     0:00.03 cli
 7332  p3  Is     0:00.00 login [pam] (login)
 7333  p3  I      0:00.00 -csh (csh)
23780  p3  S+     0:00.02 telnet aj
```

show system processes lcc wide (TX

```
user@host> show system processes lcc 2 wide
lcc2-re0:
--------------------------------------------------------------------------
```

Matrix Plus
Routing Matrix)

```
PID  TT  STAT      TIME PROVIDER COMMAND
  0  ??  WLs    0:00.00 (null)   [swapper]
  1  ??  ILs    0:00.19          /packages/mnt/jbase/sbin/init --
  2  ??  DL     0:00.02          [g_event]
  3  ??  DL     0:00.19          [g_up]
  4  ??  DL     0:00.13          [g_down]
  5  ??  DL     0:00.00          [thread taskq]
  6  ??  DL     0:00.00          [kqueue taskq]
  7  ??  DL     0:00.00          [pagedaemon]
  8  ??  DL     0:00.00          [vmdaemon]
  9  ??  DL     0:01.77          [pagezero]
 10  ??  DL     0:00.00          [ktrace]
 11  ??  RL    20:33.81          [idle]
 12  ??  WL     0:00.38          [swi2: net]
 13  ??  WL     0:01.43          [swi7: clock sio]
 14  ??  WL     0:00.00          [swi6: vm]
 15  ??  DL     0:00.14          [yarrow]
 16  ??  WL     0:00.00          [swi9: +]
 17  ??  WL     0:00.00          [swi8: +]
 18  ??  WL     0:00.00          [swi5: cambio]
 19  ??  WL     0:00.00          [swi9: task queue]
 20  ??  WL     0:03.18          [irq10: bcm0 uhci1*]
 21  ??  WL     0:00.03          [irq11: cb0 uhci0+*]
 22  ??  DL     0:00.00          [usb0]
 23  ??  DL     0:00.00          [usbtask]
 24  ??  DL     0:00.00          [usb1]
 25  ??  DL     0:00.06          [usb2]
 26  ??  DL     0:00.00          [usb3]
 27  ??  DL     0:00.00          [usb4]
 28  ??  DL     0:00.00          [usb5]
 29  ??  DL     0:00.05          [usb6]
 30  ??  DL     0:00.00          [usb7]
 31  ??  WL     0:00.00          [irq14: ata0]
 32  ??  WL     0:00.00          [irq15: ata1]
 33  ??  WL     0:00.00          [irq1: atkbd0]
 34  ??  WL     0:00.00          [swi0: sio]
 35  ??  WL     0:00.00          [swi3: ip6opt ipopt]
 36  ??  WL     0:00.00          [swi4: ip6mismatch+]
 37  ??  WL     0:00.00          [swi1: ipfwd]
 38  ??  DL     0:00.00          [bufdaemon]
 39  ??  DL     0:00.00          [vnlru]
 40  ??  DL     0:00.02          [syncer]
 41  ??  DL     0:00.01          [softdepflush]
 42  ??  DL     0:00.00          [netdaemon]
 43  ??  DL     0:00.00          [vmuncachedaemon]
 44  ??  DL     0:00.00          [if_pic_listen]
 45  ??  DL     0:00.03          [vmkmemdaemon]
 46  ??  DL     0:00.01          [cb_poll]
 47  ??  DL     0:00.00          [if_pfe_listen]
 48  ??  DL     0:00.00          [scs_housekeeping]
 49  ??  IL     0:00.00          [kern_dump_proc]
 50  ??  IL     0:00.00          [nfsiod 0]
 51  ??  IL     0:00.00          [nfsiod 1]
 52  ??  IL     0:00.00          [nfsiod 2]
 53  ??  IL     0:00.00          [nfsiod 3]
 54  ??  DL     0:00.02          [schedcpu]
 55  ??  DL     0:00.75          [md0]
 77  ??  DL     0:03.84          [md1]
 98  ??  DL     0:00.59          [md2]
116  ??  DL     0:00.02          [md3]
137  ??  DL     0:00.72          [md4]
```

```
  158  ??  DL     0:00.15          [md5]
  179  ??  DL     0:00.00          [md6]
  215  ??  DL     0:00.03          [md7]
  225  ??  DL     0:00.03          [md8]
 1052  ??  DL     0:00.00          [jsr_kkcm]
 1337  ??  SL     0:00.11          [bcmTX]
 1338  ??  SL     0:00.12          [bcmXGS3AsyncTX]
 1339  ??  SL     0:03.82          [bcmLINK.0]
 1344  ??  Is     0:00.00          /usr/sbin/cron
 1496  ??  I      0:00.00          /sbin/watchdog -t-1
 1497  ??  S      0:00.06          /usr/libexec/bslockd -mp -N
 1498  ??  I      0:00.01          /usr/sbin/tnetd -N
 1500  ??  S      0:09.93          /usr/sbin/chassisd -N
 1501  ??  S      0:00.05          /usr/sbin/alarmd -N
 1502  ??  I      0:00.39          /usr/sbin/craftd -N
 1503  ??  S      0:00.09          /usr/sbin/mgd -N
 1506  ??  I      0:00.05          /usr/sbin/inetd -N
 1507  ??  I      0:00.00          /usr/sbin/tnp.sntpd -N
 1508  ??  I      0:00.00          /usr/sbin/tnp.sntpc -N
 1510  ??  S      0:00.01          /usr/sbin/smartd -N
 1514  ??  I      0:00.07          /usr/sbin/jcsd -N
 1515  ??  S      0:00.17          /usr/sbin/idpd -N
 1516  ??  I      0:00.00          /usr/libexec/getty Pc ttyv0
 2591  ??  DL     0:00.01          [peer proxy]
 2592  ??  DL     0:00.01          [peer proxy]
 2593  ??  DL     0:00.01          [peer proxy]
 2597  ??  DL     0:00.01          [peer proxy]
 3192  ??  S      0:00.02          /usr/sbin/irsd -N
 3193  ??  S      0:00.05          /usr/sbin/snmpd -N
 3194  ??  S      0:00.04          /sbin/dcd -N
 3195  ??  I      0:00.01          /usr/sbin/pfed -N
 3196  ??  S      0:00.02          /usr/sbin/mib2d -N
 3197  ??  I      0:00.03          /usr/sbin/dfwd -N
 3198  ??  S      0:00.15          /usr/sbin/ksyncd -N
 3559  ??  Ss     0:00.00          mgd: (mgd) (root) (mgd)
 3560  ??  R      0:00.00          /bin/ps -ax -Jpww
 1138  d0- S      0:00.00          /usr/sbin/usbd -N
 1156  d0- S      0:00.50          /usr/sbin/eventd -N -r -s -A
 1517  d0  Is+    0:00.00          /usr/libexec/getty std.9600 ttyd0
```

show system processes (QFX Series)

```
user@switch> show system processes
PID  TT  STAT      TIME COMMAND
    0  ??  WLs  -2341043:-31.01 [swapper]
    1  ??  SLs    0:01.34 /packages/mnt/jbase/sbin/init --
    2  ??  DL     2:48.31 [g_event]
    3  ??  DL     1:47.44 [g_up]
    4  ??  DL     1:37.82 [g_down]
    5  ??  DL     0:00.00 [kdm_tcp_poller]
    6  ??  DL     0:00.00 [thread taskq]
    7  ??  DL     0:04.86 [kqueue taskq]
    9  ??  DL     0:03.94 [pagedaemon]
   10  ??  DL     0:00.00 [ktrace]
   11  ??  RL     0:00.00 [idle: cpu31]
   12  ??  RL     0:00.00 [idle: cpu30]
   13  ??  RL     0:00.00 [idle: cpu29]
   14  ??  RL     0:00.00 [idle: cpu28]
   15  ??  RL     0:00.00 [idle: cpu27]
   16  ??  RL     0:00.00 [idle: cpu26]
   17  ??  RL     0:00.00 [idle: cpu25]
   18  ??  RL     0:00.00 [idle: cpu24]
   19  ??  RL     0:00.00 [idle: cpu23]
```

```
20  ??  RL     0:00.00 [idle: cpu22]
21  ??  RL     0:00.00 [idle: cpu21]
22  ??  RL     0:00.00 [idle: cpu20]
23  ??  RL     0:00.00 [idle: cpu19]
24  ??  RL     0:00.00 [idle: cpu18]
25  ??  RL     0:00.00 [idle: cpu17]
26  ??  RL     0:00.00 [idle: cpu16]
27  ??  RL     0:00.00 [idle: cpu15]
28  ??  RL     0:00.00 [idle: cpu14]
29  ??  RL     0:00.00 [idle: cpu13]
30  ??  RL     0:00.00 [idle: cpu12]
31  ??  RL     0:00.00 [idle: cpu11]
32  ??  RL     0:00.00 [idle: cpu10]
33  ??  RL     0:00.00 [idle: cpu9]
34  ??  RL   18184:07.25 [idle: cpu8]
35  ??  RL     0:00.00 [idle: cpu7]
36  ??  RL   17862:11.31 [idle: cpu6]
37  ??  RL   19343:45.16 [idle: cpu5]
38  ??  RL   5192:38.30 [idle: cpu4]
39  ??  RL     0:00.00 [idle: cpu3]
40  ??  RL   19278:02.24 [idle: cpu2]
41  ??  RL   19291:00.72 [idle: cpu1]
42  ??  RL   18910:31.21 [idle: cpu0]
43  ??  WL    19:03.74 [swi2: net]
44  ??  WL   261:43.82 [swi7: clock sio]
45  ??  WL     0:00.00 [swi6: vm]
46  ??  DL     2:18.57 [yarrow]
47  ??  WL     0:00.00 [swi9: +]
48  ??  WL     0:00.00 [swi8: +]
49  ??  WL     0:12.36 [swi5: cambio]
50  ??  WL     0:00.00 [swi9: task queue]
51  ??  WL     0:00.00 [swi0: sio]
52  ??  WL     0:32.40 [irq39: ehci0]
53  ??  DL     0:00.21 [usb0]
54  ??  DL     0:00.00 [usbtask]
55  ??  WL     0:00.00 [irq22: xlr_lbus0]
56  ??  WL     0:00.00 [irq38: xlr_lbus0]
57  ??  WL     0:00.00 [swi3: ip6opt ipopt]
58  ??  WL     0:00.00 [swi4: ip6mismatch+]
59  ??  WL     0:00.00 [swi1: ipfwd]
60  ??  DL     0:18.65 [pagezero]
61  ??  DL     0:18.59 [bufdaemon]
62  ??  DL     1:10.44 [vnlru_mem]
63  ??  DL     1:51.66 [syncer]
64  ??  DL     0:20.22 [vnlru]
65  ??  DL     0:40.48 [softdepflush]
66  ??  DL     0:00.00 [netdaemon]
67  ??  DL    20:47.67 [vmkmemdaemon]
68  ??  DL     0:00.00 [if_pfe_listen]
69  ??  SL     0:02.80 [kdm_checkkcore]
70  ??  SL     0:03.34 [kdm_savekcore]
71  ??  SL     0:04.31 [kdm_livekcore]
72  ??  SL     0:06.14 [kdm_logger]
73  ??  SL     0:04.31 [kdm_kdb]
74  ??  SL     0:00.02 [devrt_kernel_thread]
75  ??  DL     0:21.54 [vmuncachedaemon]
76  ??  DL     0:00.00 [if_pic_listen0]
77  ??  SL     0:00.00 [nfsiod 0]
78  ??  SL     0:00.00 [nfsiod 1]
79  ??  SL     0:00.00 [nfsiod 2]
80  ??  SL     0:00.00 [nfsiod 3]
```

```
   81  ??  WL     5:59.98 [irq13: +]
   82  ??  RL   105:06.81 [pkt_sender: cpu0]
   83  ??  DL     0:03.62 [md0]
   95  ??  DL     0:37.04 [md1]
  115  ??  DL     0:06.01 [md2]
  135  ??  DL     0:00.75 [md3]
  155  ??  DL     0:21.17 [md4]
  175  ??  DL     0:01.90 [md5]
  195  ??  DL     0:06.26 [md6]
  231  ??  DL     0:00.01 [md7]
  755  ??  Ss     0:04.17 /usr/sbin/cron
  847  ??  S      0:00.10 /usr/sbin/tnetd -N
  849  ??  S      0:06.82 /usr/sbin/mgd -N
  850  ??  S      0:00.32 /usr/sbin/inetd -N
  852  ??  S      1:05.34 /usr/sbin/dhcpd -N
  853  ??  S      0:00.18 /usr/sbin/inetd -p /var/run/inetd_4.pid -N -JU __juni
  855  ??  L    1181:02.21 /usr/sbin/dc-pfe -N (pafxpc)
  857  ??  S     17:55.86 /usr/sbin/vccpd -N
  896  ??  S     93:43.45 /usr/sbin/chassism -N
  953  ??  S      0:02.89 /sbin/watchdog -t-1
  954  ??  S      3:34.00 /sbin/dcd -N
  955  ??  S     10:30.13 /usr/sbin/chassisd -N
  956  ??  DL     0:00.21 [peer proxy]
  957  ??  S      4:07.43 /usr/sbin/alarmd -N
  958  ??  S      0:31.69 /usr/sbin/craftd -N
  959  ??  S      0:55.16 /usr/sbin/mib2d -N
  960  ??  S      3:40.64 /usr/sbin/rpd -N
  961  ??  S      0:00.03 /usr/sbin/tnp.sntpd -N
  962  ??  S      0:51.94 /usr/sbin/pfed -N
  963  ??  S      0:47.31 /usr/sbin/rmopd -N
  964  ??  S      0:33.65 /usr/sbin/cosd
  965  ??  S      1:48.41 /usr/sbin/ppmd -N
  966  ??  S      0:07.18 /usr/sbin/dfwd -N
  967  ??  S      1:02.56 /usr/sbin/bfdd -N
  968  ??  S      0:00.63 /usr/sbin/rdd -N
  969  ??  S      0:40.61 /usr/sbin/dfcd -N
  971  ??  S      0:07.81 /usr/sbin/bdbrepd -N
  972  ??  S      0:00.28 /usr/sbin/sendd -N
  973  ??  S      1:37.69 /usr/sbin/xntpd -j -N -g -JU __juniper_private4__ (nt
  974  ??  S      5:56.28 /usr/sbin/snmpd -N -JU __juniper_private4__
  975  ??  S     16:46.82 /usr/sbin/jdiameterd -N
  976  ??  S      2:34.13 /usr/sbin/eswd -N
  977  ??  S      1:03.05 /usr/sbin/sflowd -N
  978  ??  S      0:22.30 /usr/sbin/fcd -N
  979  ??  S      1:07.01 /usr/sbin/vccpdf -N
  982  ??  S      0:25.25 /usr/sbin/mcsnoopd -N
  983  ??  S      3:45.68 /usr/sbin/rpdf -N
 1043  ??  S      0:37.87 /usr/sbin/lacpd -N
 1048  ??  DL     0:01.29 [peer proxy]
 1111  ??  WL     0:00.00 [swi2: FMNITHRD+]
 1112  ??  DL     0:00.03 [peer proxy]
12816  ??  S     15:35.32 /usr/sbin/sfid -N
30893  ??  Ss     0:00.65 sshd: tlewis@ttyp0 (sshd)
30897  ??  Ss     0:00.15 mgd: (mgd) (tlewis)/dev/ttyp0 (mgd)
30905  ??  Ss     0:00.64 sshd: tlewis@ttyp1 (sshd)
30909  ??  Ss     0:00.15 mgd: (mgd) (tlewis)/dev/ttyp1 (mgd)
30910  ??  Ss     0:01.26 sshd: tcheng@ttyp2 (sshd)
30914  ??  Ss     0:00.80 mgd: (mgd) (tcheng)/dev/ttyp2 (mgd)
30937  ??  R      0:00.03 /bin/ps -ax
  661  d0- S      0:21.24 /usr/sbin/eventd -N -r -s -A
  860  d0  Ss+    0:00.07 /usr/libexec/getty std.9600 ttyd0
```

```
30896  p0  Ss+    0:00.55 -cli (cli)
30908  p1  Ss+    0:00.50 -cli (cli)
30913  p2  Ss+    0:00.85 -cli (cli)
```

show system queues

Syntax

show system queues

Syntax (TX Matrix Router)

show system queues
<all-chassis| all-lcc | lcc *number* | scc>

Syntax (TX Matrix Plus Router)

show system queues
<all-chassis | all-lcc | lcc *number* | sfc *number*>

Syntax (MX Series Router)

show system queues
<all-members>
<local>
<member *member-id*>

Release Information

Command introduced before Junos OS Release 7.4.
sfc option introduced for the TX Matrix Plus router in Junos OS Release 9.6.

Description

Display queue statistics.

Options

all-chassis—(TX Matrix routers and TX Matrix Plus routers only) (Optional) On a TX Matrix router, display system queue statistics for all the T640 routers in the chassis that are connected to the TX Matrix router. On a TX Matrix Plus router, display system queue statistics for all the T1600 or T4000 routers in the chassis that are connected the TX Matrix Plus router.

all-lcc—(TX Matrix routers and TX Matrix Plus routers only) (Optional) Display system queue statistics for all LCC chassis attached to the TX Matrix or TX Matrix Plus router.

all-members—(MX Series routers only) (Optional) Display system queue statistics for all members of the Virtual Chassis configuration.

lcc *number*—(TX Matrix routers and TX Matrix Plus routers only) (Optional) On a TX Matrix router, display system queue statistics for a specific T640 router that is connected to the TX Matrix router. On a TX Matrix Plus router, display system queue statistics for a specific connected router that is connected to the TX Matrix Plus router.

Replace *number* with the following values depending on the LCC configuration:

- 0 through 3, when T640 routers are connected to a TX Matrix router in a routing matrix.
- 0 through 3, when T1600 routers are connected to a TX Matrix Plus router in a routing matrix.
- 0 through 7, when T1600 routers are connected to a TX Matrix Plus router with 3D SIBs in a routing matrix.
- 0, 2, 4, or 6, when T4000 routers are connected to a TX Matrix Plus router with 3D SIBs in a routing matrix.

local—(MX Series routers only) (Optional) Display system queue statistics for the local Virtual Chassis member.

member ***member-id***—(MX Series routers only) (Optional) Display system queue statistics for the specified member of the Virtual Chassis configuration. Replace ***member-id*** with a value of 0 or 1.

scc—(TX Matrix routers only) (Optional) Display queue statistics for the TX Matrix router.

sfc ***number***—(TX Matrix Plus routers only) (Optional) Display system queue statistics for the TX Matrix Plus router. Replace ***number*** with 0.

Additional Information

By default, when you issue the **show system queues** command on the master Routing Engine of a TX Matrix router or a TX Matrix Plus router, the command is broadcast to all the master Routing Engines of the LCCs connected to it in the routing matrix. Likewise, if you issue the same command on the backup Routing Engine of a TX Matrix or a TX Matrix Plus router, the command is broadcast to all backup Routing Engines of the LCCs that are connected to it in the routing matrix.

Required Privilege Level

maintenance

Related Documentation

- *Routing Matrix with a TX Matrix Plus Router Solutions Page*

List of Sample Output

show system queues on page 269
show system queues scc (TX Matrix Router) on page 269
show system queues sfc (TX Matrix Router) on page 269

Output Fields

Table 10 on page 268 lists the output fields for the **show system queues** command. Output fields are listed in the approximate order in which they appear.

Table 10: show system queues Output Fields

Field Name	Field Description
Output interface	Interface on the router on which the queue exists: • **fxp0**—Management Ethernet interface • **fxp1**—Internal Ethernet interface • **lsi**—Internally generated interface and not configurable • **dsc**—Discard interface
bytes	Number of bytes in the queue.
max	Maximum number of bytes allowed in the queue.
packets	Number of packets in the queue.
max	Maximum number of packets allowed in the queue.
drops	Number of packets dropped from the queue.

Sample Output

show system queues

```
user@host> show system queues
output interface             bytes          max  packets      max    drops
fxp0                            0      1250000        0     4166        6
fxp1                            0      1250000        0     4166       19
lsi                             0        12500        0       41        0
dsc                             0            0        0        0        0
```

show system queues scc (TX Matrix Router)

```
user@host> show system queues scc
output interface             bytes          max  packets      max    drops
fxp0                            0      1250000        0     4166        5
lsi                             0        12500        0       41        0
dsc                             0            0        0        0        0
lo0                             0            0        0        0        0
bcm0                            0     12500000        0    30000        0
em0                             0     12500000        0    30000        0
gre                             0        12500        0       41        0
ipip                            0        12500        0       41        0
tap                             0            0        0        0        0
pime                            0        12500        0       41        0
pimd                            0        12500        0       41        0
mtun                            0        12500        0       41        0
so-1/0/0                        0       125000        0      416        0
so-1/1/0                        0       125000        0      416        0
so-21/0/0                       0       125000        0      416        0
ge-21/1/0                       0      1250000        0     4166        0
ge-21/1/1                       0      1250000        0     4166        3
ge-21/2/0                       0      1250000        0     4166        0
ge-21/2/1                       0      1250000        0     4166        3
so-21/3/0                       0       125000        0      416        0
so-0/0/0                        0       125000        0      416        0
so-0/1/0                        0       125000        0      416        0
so-0/2/0                        0       125000        0      416        0
pd-0/3/0                        0        12500        0       41        0
pe-0/3/0                        0        12500        0       41        0
gr-0/3/0                        0        12500        0       41        0
ip-0/3/0                        0        12500        0       41        0
vt-0/3/0                        0        12500        0       41        0
mt-0/3/0                        0        12500        0       41        0
lt-0/3/0                        0        12500        0       41        0
so-17/0/0                       0       125000        0      416        0
input protocol              bytes          max  packets      max    drops
splfwdq                         0      1000000        0     1000        0
splnetq                         0      1000000        0     1000        0
arpintrq                        0         1000        0       50        0
optionq                         0       200000        0      200        0
icmpq                           0        50000        0       50        0
frlmiq                          0            0        0        0        0
spppintrq                       0        25000        0      250        0
clnlintrq                       0       200000        0      200        0
tnpintrq                        0      1250000        0     4166        0
tagintrq                        0       200000        0      200        0
tagfragq                        0       200000        0      200        0
```

show system queues sfc (TX Matrix Router)

```
user@host> show system queues sfc 0
sfc0-re0:
--------------------------------------------------------------------------
```

output interface	bytes	max	packets	max	drops
ixgbe1	0	125000000	0	45000	4384
ixgbe0	0	125000000	0	45000	0
lsi	0	12500	0	41	0
dsc	0	0	0	0	0
lo0	0	0	0	0	0
em0	0	12500000	0	41666	1
gre	0	12500	0	41	0
ipip	0	12500	0	41	0
tap	0	0	0	0	0
pime	0	12500	0	41	0
pimd	0	12500	0	41	0
mtun	0	12500	0	41	0
xe-12/0/0	0	1250000	0	4166	0
xe-12/0/1	0	1250000	0	4166	0
xe-12/0/2	0	1250000	0	4166	0
xe-12/0/3	0	1250000	0	4166	0
xe-12/1/0	0	1250000	0	4166	0
xe-12/1/1	0	1250000	0	4166	0
xe-12/1/2	0	1250000	0	4166	0
xe-12/1/3	0	1250000	0	4166	0
xe-20/0/0	0	1250000	0	4166	0
xe-20/0/1	0	1250000	0	4166	0
xe-20/0/2	0	1250000	0	4166	0
xe-20/0/3	0	1250000	0	4166	0
xe-20/1/0	0	1250000	0	4166	0
xe-20/1/1	0	1250000	0	4166	0
xe-20/1/2	0	1250000	0	4166	0
xe-20/1/3	0	1250000	0	4166	0
ge-15/0/0	0	1250000	0	4166	75
ge-15/0/1	0	1250000	0	4166	0
ge-15/0/2	0	1250000	0	4166	75
ge-15/0/3	0	1250000	0	4166	75
ge-15/0/4	0	1250000	0	4166	0
ge-15/0/5	0	1250000	0	4166	0
ge-15/0/6	0	1250000	0	4166	0
ge-15/0/7	0	1250000	0	4166	0
ge-15/0/8	0	1250000	0	4166	0
ge-15/0/9	0	1250000	0	4166	0
xe-4/0/0	0	1250000	0	4166	0
xe-4/0/1	0	1250000	0	4166	0
xe-4/0/2	0	1250000	0	4166	0
xe-4/0/3	0	1250000	0	4166	0
xe-4/1/0	0	1250000	0	4166	0
xe-4/1/1	0	1250000	0	4166	0
xe-4/1/2	0	1250000	0	4166	0
xe-4/1/3	0	1250000	0	4166	0
xe-24/0/0	0	1250000	0	4166	0
xe-24/0/1	0	1250000	0	4166	0
xe-24/0/2	0	1250000	0	4166	0
xe-24/0/3	0	1250000	0	4166	0
xe-24/1/0	0	1250000	0	4166	0
xe-24/1/1	0	1250000	0	4166	0
xe-24/1/2	0	1250000	0	4166	0
xe-24/1/3	0	1250000	0	4166	0
ge-7/0/0	0	1250000	0	4166	0
ge-7/0/1	0	1250000	0	4166	0
ge-7/0/2	0	1250000	0	4166	0
ge-7/0/3	0	1250000	0	4166	75
ge-7/0/4	0	1250000	0	4166	0
ge-7/0/5	0	1250000	0	4166	0

ge-7/0/6	0	1250000	0	4166	0
ge-7/0/7	0	1250000	0	4166	0
ge-7/0/8	0	1250000	0	4166	0
ge-7/0/9	0	1250000	0	4166	0
so-7/1/0	0	125000	0	416	0
so-7/2/0	0	125000	0	416	0
xe-21/0/0	0	1250000	0	4166	0
xe-21/0/1	0	1250000	0	4166	0
xe-21/0/2	0	1250000	0	4166	0
xe-21/0/3	0	1250000	0	4166	0
xe-21/1/0	0	1250000	0	4166	0
xe-21/1/1	0	1250000	0	4166	0
xe-21/1/2	0	1250000	0	4166	0
xe-21/1/3	0	1250000	0	4166	0
xe-14/0/0	0	1250000	0	4166	0
xe-14/0/1	0	1250000	0	4166	0
xe-14/0/2	0	1250000	0	4166	0
xe-14/0/3	0	1250000	0	4166	0
xe-14/1/0	0	1250000	0	4166	0
xe-14/1/1	0	1250000	0	4166	0
xe-14/1/2	0	1250000	0	4166	0
xe-14/1/3	0	1250000	0	4166	0
xe-25/0/0	0	1250000	0	4166	0
xe-25/0/1	0	1250000	0	4166	0
xe-25/0/2	0	1250000	0	4166	0
xe-25/0/3	0	1250000	0	4166	0
xe-25/1/0	0	1250000	0	4166	0
xe-25/1/1	0	1250000	0	4166	0
xe-25/1/2	0	1250000	0	4166	0
xe-25/1/3	0	1250000	0	4166	0
so-22/0/0	0	125000	0	416	0
so-22/0/1	0	125000	0	416	0
so-22/0/2	0	125000	0	416	0
so-22/0/3	0	125000	0	416	0
xe-22/1/0	0	1250000	0	4166	0
xe-22/1/1	0	1250000	0	4166	0
xe-22/1/2	0	1250000	0	4166	0
xe-22/1/3	0	1250000	0	4166	0
xe-6/0/0	0	1250000	0	4166	0
xe-6/0/1	0	1250000	0	4166	0
xe-6/0/2	0	1250000	0	4166	0
xe-6/0/3	0	1250000	0	4166	0
xe-6/1/0	0	1250000	0	4166	0
xe-6/1/1	0	1250000	0	4166	0
xe-6/1/2	0	1250000	0	4166	0
xe-6/1/3	0	1250000	0	4166	0
xe-26/0/0	0	1250000	0	4166	0
xe-26/0/1	0	1250000	0	4166	0
xe-26/0/2	0	1250000	0	4166	0
xe-26/0/3	0	1250000	0	4166	0
xe-26/1/0	0	1250000	0	4166	0
xe-26/1/1	0	1250000	0	4166	0
xe-26/1/2	0	1250000	0	4166	0
xe-26/1/3	0	1250000	0	4166	0
ge-31/0/0	0	1250000	0	4166	0
ge-31/0/1	0	1250000	0	4166	0
ge-31/0/2	0	1250000	0	4166	0
ge-31/0/3	0	1250000	0	4166	0
ge-31/0/4	0	1250000	0	4166	75
ge-31/0/5	0	1250000	0	4166	0
ge-31/0/6	0	1250000	0	4166	75

```
ge-31/0/7                       0      1250000        0     4166        0
ge-31/0/8                       0      1250000        0     4166        0
ge-31/0/9                       0      1250000        0     4166        0
pd-31/1/0                       0        12500        0       41        0
pe-31/1/0                       0        12500        0       41        0
gr-31/1/0                       0        12500        0       41        0
ip-31/1/0                       0        12500        0       41        0
vt-31/1/0                       0        12500        0       41        0
mt-31/1/0                       0        12500        0       41        0
lt-31/1/0                       0        12500        0       41        0
so-29/0/0                       0       125000        0      416        0
so-29/0/1                       0       125000        0      416        0
so-29/0/2                       0       125000        0      416        0
so-29/0/3                       0       125000        0      416        0
xe-29/1/0                       0      1250000        0     4166        0
xe-29/1/1                       0      1250000        0     4166        0
xe-29/1/2                       0      1250000        0     4166        0
xe-29/1/3                       0      1250000        0     4166        0
so-28/0/0                       0       125000        0      416        0
so-28/0/1                       0       125000        0      416        0
so-28/0/2                       0       125000        0      416        0
so-28/0/3                       0       125000        0      416        0
ge-23/0/0                       0      1250000        0     4166        0
ge-23/0/1                       0      1250000        0     4166        0
ge-23/0/2                       0      1250000        0     4166        0
ge-23/0/3                       0      1250000        0     4166        0
ge-23/0/4                       0      1250000        0     4166        0
ge-23/0/5                       0      1250000        0     4166        0
ge-23/0/6                       0      1250000        0     4166        0
ge-23/0/7                       0      1250000        0     4166        0
ge-23/0/8                       0      1250000        0     4166        0
ge-23/0/9                       0      1250000        0     4166        0
input protocol              bytes          max  packets      max    drops
splfwdq                         0      1000000        0     1000        0
splnetq                         0      1000000        0     1000        0
arpintrq                        0         1000        0       50        0
optionq                         0       200000        0      200        0
icmpq                           0        50000        0       50        0
frlmiq                          0            0        0        0        0
spppintrq                       0        25000        0      250        0
atmctlpktq                      0            0        0        0        0
atmoamq                         0            0        0        0        0
tnpintrq                        0      1250000        0     4166        0
tagintrq                        0       200000        0      200        0
tagfragq                        0       200000        0      200        0
```

show system reboot

Syntax

show system reboot
<both-routing-engines>

Syntax (EX Series Switches)

show system reboot
<all-members>
<both-routing-engines>
<local>
<member *member-id*>

Syntax (TX Matrix Router)

show system reboot
<all-chassis | all-lcc | lcc *number* | scc>
<both-routing-engines>

Syntax (TX Matrix Plus Router)

show system reboot
<all-chassis| all-lcc | lcc *number* | sfc *number*>
<both-routing-engines>

Syntax (MX Series Router)

show system reboot
<all-members>
<both-routing-engines>
<local>
<member *member-id*>

Syntax (QFX Series)

show system reboot
<both-routing-engines>
<infrastructure *name*>
<interconnect-device *name*>
<node-device *name*>

Release Information

Command introduced before Junos OS Release 7.4.
Command introduced in Junos OS Release 9.0 for EX Series switches.
sfc option introduced for the TX Matrix Plus router in Junos OS Release 9.6.
Command introduced in Junos OS Release 11.1 for the QFX Series.

Description

Display pending system reboots or halts.

Options

none—Display pending reboots or halts on the active Routing Engine.

all-chassis—(TX Matrix routers and TX Matrix Plus routers only) (Optional) On a TX Matrix router, display halt or reboot request information for all the T640 routers in the chassis that are connected to the TX Matrix router. On a TX Matrix router, display halt or reboot request information for all the T1600 or T4000 routers in the chassis that are connected to the TX Matrix Plus router.

all-members—(EX4200 switches and MX Series routers only) (Optional) Display halt or reboot request information for all members of the Virtual Chassis configuration.

all-lcc—(TX Matrix routers and TX Matrix Plus router only) (Optional) On a TX Matrix router, display system halt or reboot request information for all T640 routers

connected to the TX Matrix router. On a TX Matrix Plus router, display halt or reboot request information for all connected T1600 or T4000 LCCs.

both-routing-engines—(Systems with multiple Routing Engines) (Optional) Display halt or reboot request information on both Routing Engines.

infrastructure ***name***—(QFabric systems only) (Optional) Display reboot request information on the fabric manager Routing Engines and fabric control Routing Engines.

interconnect-device ***name***—(QFabric systems only) (Optional) Display reboot request information on the Interconnect device.

lcc ***number***—(TX Matrix routers and TX Matrix Plus routers only) (Optional) On a TX Matrix router, display halt or reboot request information for a specific T640 router that is connected to the TX Matrix router. On a TX Matrix Plus router, display halt or reboot request information for a specific router that is connected to the TX Matrix Plus router.

Replace *number* with the following values depending on the LCC configuration:

- 0 through 3, when T640 routers are connected to a TX Matrix router in a routing matrix.
- 0 through 3, when T1600 routers are connected to a TX Matrix Plus router in a routing matrix.
- 0 through 7, when T1600 routers are connected to a TX Matrix Plus router with 3D SIBs in a routing matrix.
- 0, 2, 4, or 6, when T4000 routers are connected to a TX Matrix Plus router with 3D SIBs in a routing matrix.

local—(EX4200 switches and MX Series routers only) (Optional) Display halt or reboot request information for the local Virtual Chassis member.

member ***member-id***—(EX4200 switches and MX Series routers only) (Optional) Display halt or reboot request information for the specified member of the Virtual Chassis configuration. For EX4200 switches, replace ***member-id*** with a value from 0 through 9. For an MX Series Virtual Chassis, replace ***member-id*** with a value of 0 or 1.

node-group ***name***—(QFabric systems only) (Optional) Display reboot request information on the Node group.

scc—(TX Matrix router only) (Optional) Display halt or reboot request information for the TX Matrix router (or switch-card chassis).

sfc—(TX Matrix Plus router only) (Optional) Display halt or reboot request information for the TX Matrix Plus router.

Additional Information

By default, when you issue the **show system reboot** command on a TX Matrix or TX Matrix Plus master Routing Engine, the command is broadcast to all the T640 (in a routing matrix based on the TX Matrix router) or T1600 (in a routing matrix based on the TX Matrix Plus router) master Routing Engines connected to it. Likewise, if you issue the

same command on the TX Matrix or TX Matrix Plus backup Routing Engine, the command is broadcast to all the T640 (in a routing matrix based on the TX Matrix router) or T1600 (in a routing matrix based on the TX Matrix Plus router) backup Routing Engines that are connected to it.

Required Privilege Level maintenance

Related Documentation

- *Routing Matrix with a TX Matrix Plus Router Solutions Page*

List of Sample Output

show system reboot on page 275
show system reboot all-lcc (TX Matrix Router) on page 275
show system reboot sfc (TX Matrix Plus Router) on page 275
show system reboot (QFX3500 Switch) on page 275

Sample Output

show system reboot

```
user@host> show system reboot
reboot requested by root at Wed Feb 10 17:40:46 1999
[process id 17885]
```

show system reboot all-lcc (TX Matrix Router)

```
user@host> show system reboot all-lcc
lcc0-re0:
--------------------------------------------------------------------------
No shutdown/reboot scheduled.

lcc2-re0:
--------------------------------------------------------------------------
No shutdown/reboot scheduled.
```

show system reboot sfc (TX Matrix Plus Router)

```
user@host> show system sfc 0
No shutdown/reboot scheduled.
```

show system reboot (QFX3500 Switch)

```
user@switch> show system reboot
No shutdown/reboot scheduled.
```

show system rollback

Syntax

show system rollback *number*
<compare *number*>

Release Information

Command introduced before Junos OS Release 7.4.
Command introduced in Junos OS Release 9.0 for EX Series switches.
Command introduced in Junos OS Release 11.1 for the QFX Series.

Description

Display the contents of a previously committed configuration, or the differences between two previously committed configurations.

NOTE: **The show system rollback command is a purely operational mode command and cannot be issued with run from the configuration mode.**

Options

number—Number of a configuration to view. The output displays the configuration. The range of values is 0 through 49.

compare *number* —(Optional) Number of another previously committed (rollback) configuration to compare to rollback ***number***. The output displays the differences between the two configurations. The range of values is 0 through 49.

Required Privilege Level

view

List of Sample Output

show system rollback compare on page 277

Sample Output

show system rollback compare

```
user@host> show system rollback 3 compare 1
[edit]
+  interfaces {
+      ge-1/1/1 {
+          unit 0 {
+              family inet {
+                  filter {
+                      input mf_plp;
+                  }
+                  address 14.1.1.1/30;
+              }
+          }
+      }
+      ge-1/2/1 {
+          unit 0 {
+              family inet {
+                  filter {
+                      input mf_plp;
+                  }
+                  address 13.1.1.1/30;
+              }
+          }
+      }
+      ge-1/3/0 {
+          unit 0 {
+              family inet {
+                  filter {
+                      input mf_plp;
+                  }
+                  address 12.1.1.1/30;
+              }
+          }
+      }
+}
```

show system snapshot

Syntax

show system snapshot

Syntax (EX Series Switches)

show system snapshot
<all-members|local|member *member-id*>
<media (external | internal)>

Release Information

Command introduced in Junos OS Release 7.6.
Command introduced in Junos OS Release 10.0 for EX Series switches.

Description

Display information about the backup software:

- On the routers, display information about the backup software, which is located in the **/altroot**, and **/altconfig** file systems or on the alternate media.
- On the switches, display information about the backup of the root file system **(/)** and directories **/altroot**,**/config**, **/var**, and **/var/tmp**, which are located either on an external USB flash drive or in internal flash memory.

NOTE: To back up software, use the **request system snapshot** command.

Options

none—Display information about the backup software.

all-members | local | member *member-id*—(EX Series switch Virtual Chassis only) (Optional) Display the snapshot in a Virtual Chassis:

- **all-members**—Display the snapshot for all members of the Virtual Chassis.
- **local**—Display the snapshot on the member of the Virtual Chassis that you are currently logged into.
- **member *member-id***—Display the snapshot for the specified member of the Virtual Chassis.

media (external | internal)—(EX Series switch only) (Optional) Display the destination media location for the snapshot. The **external** option specifies the snapshot on an external mass storage device, such as a USB flash drive. The **internal** option specifies the snapshot on an internal memory source, such as internal flash memory. If no additional options are specified, the command displays the snapshot stored in both slices.

Required Privilege Level

view

Related Documentation

- request system snapshot on page 208

List of Sample Output

show system snapshot (Router) on page 280

show system snapshot media external (Switch) on page 280
show system snapshot media internal (Switch) on page 280

Output Fields

Table 11 on page 279 lists the output fields for the **show system snapshot** command. Output fields are listed in the approximate order in which they appear.

Table 11: show system snapshot Output Fields

Field Name	Field Description
Creation date	Date and time of the last snapshot.
JUNOS version on snapshot	Junos OS release number of individual software packages.

Sample Output

show system snapshot (Router)

```
user@host> show system snapshot
Information for snapshot on hard-disk
Creation date: Oct 5 13:53:29 2005
JUNOS version on snapshot:
  jbase  : 7.3R2.5
  jcrypto: 7.3R2.5
  jdocs  : 7.3R2.5
  jkernel: 7.3R2.5
  jpfe   : M40-7.3R2.5
  jroute : 7.3R2.5
```

show system snapshot media external (Switch)

```
user@switch> show system snapshot media external
Information for snapshot on       external (/dev/da1s1a) (backup)
Creation date: Mar 19 03:37:18 2012
JUNOS version on snapshot:
  jbase  : ex-12.1I20120111_0048_user
  jcrypto-ex: 12.1I20120111_0048_user
  jdocs-ex: 12.1I20120111_0048_user
  jroute-ex: 12.1I20120111_0048_user
  jswitch-ex: 12.1I20120111_0048_user
  jweb-ex: 12.1I20120111_0048_user
Information for snapshot on       external (/dev/da1s2a) (primary)
Creation date: Mar 19 03:38:25 2012
JUNOS version on snapshot:
  jbase  : ex-12.2I20120305_2240_user
  jcrypto-ex: 12.2I20120305_2240_user
  jdocs-ex: 12.2I20120305_2240_user
  jroute-ex: 12.2I20120305_2240_user
  jswitch-ex: 12.2I20120305_2240_user
  jweb-ex: 12.2I20120305_2240_user
```

show system snapshot media internal (Switch)

```
user@switch> show system snapshot media internal
Information for snapshot on internal (/dev/da0s1a) (backup)
Creation date: Mar 14 05:01:02 2011
JUNOS version on snapshot:
  jbase  : 11.1R1.9
  jcrypto-ex: 11.1R1.9
  jdocs-ex: 11.1R1.9
  jkernel-ex: 11.1R1.9
  jroute-ex: 11.1R1.9
  jswitch-ex: 11.1R1.9
  jweb-ex: 11.1R1.9
  jpfe-ex42x: 11.1R1.9
Information for snapshot on internal (/dev/da0s2a) (primary)
Creation date: Mar 30 08:46:27 2011
JUNOS version on snapshot:
  jbase  : 11.2-20110330.0
  jcrypto-ex: 11.2-20110330.0
  jdocs-ex: 11.2-20110330.0
  jkernel-ex: 11.2-20110330.0
  jroute-ex: 11.2-20110330.0
  jswitch-ex: 11.2-20110330.0
  jweb-ex: 11.2-20110330.0
  jpfe-ex42x: 11.2-20110330.0
```

show system software

Syntax

show system software
<detail>

Syntax (EX Series Switches)

show system software
<all-members>
<detail>
<local>
<member *member-id*>

Syntax (TX Matrix Router)

show system software
<all-chassis | all-lcc | lcc *number* | scc>
<detail>

Syntax (TX Matrix Plus Router)

show system software
<all-chassis | all-lcc | lcc *number* | sfc *number*>
<detail>

Syntax (J Series Routers)

show system software
<backup>
<detail>

Syntax (QFX Series)

show system software
<detail>
<infrastructure *name*>
<interconnect-device *name*>
<node-group *name*>

Release Information

Command introduced before Junos OS Release 7.4.
Command introduced in Junos OS Release 9.0 for EX Series switches.
sfc option introduced for the TX Matrix Plus router in Junos OS Release 9.6.
Command introduced in Junos OS Release 11.1 for the QFX Series.

Description

Display the Junos OS extensions loaded on your router or switch.

Options

none—Display standard information about all loaded Junos OS extensions.

all-chassis—(TX Matrix routers and TX Matrix Plus routers only) (Optional) Display system software information for all the T640 routers (TX Matrix Router) or all the routers (TX Matrix Plus Router) in the chassis.

all-lcc—(TX Matrix routers and TX Matrix Plus routers only) (Optional) On a TX Matrix router, display system software information for all T640 routers connected to the TX Matrix router. On a TX Matrix Plus router, display system software information for all connected T1600 or T4000 LCCs.

all-members—(EX4200 switches only) (Optional) Display the system software running on all members of the Virtual Chassis configuration.

backup—(J Series routers only) (Optional) Display the status of old system software packages only.

detail—(Optional) Display detailed information about available Junos OS extensions.

infrastructure ***name***—(QFabric systems only) (Optional) Display the system software running on the fabric control Routing Engine and the fabric manager Routing Engine.

interconnect-device ***name***—(QFabric systems only) (Optional) Display the system software running on the Interconnect device.

lcc ***number***—(TX Matrix routers and TX Matrix Plus routers only) (Optional) On a TX Matrix router, display system software information for a specific T640 router that is connected to the TX Matrix router. On a TX Matrix Plus router, display system software information for a specific router that is connected to the TX Matrix Plus router.

Replace *number* with the following values depending on the LCC configuration:

- 0 through 3, when T640 routers are connected to a TX Matrix router in a routing matrix.
- 0 through 3, when T1600 routers are connected to a TX Matrix Plus router in a routing matrix.
- 0 through 7, when T1600 routers are connected to a TX Matrix Plus router with 3D SIBs in a routing matrix.
- 0, 2, 4, or 6, when T4000 routers are connected to a TX Matrix Plus router with 3D SIBs in a routing matrix.

local—(EX4200 switches only) (Optional) Display the system software running on the local Virtual Chassis member.

member ***member-id***—(EX4200 switches only) (Optional) Display the system software running on the specified member of the Virtual Chassis configuration. Replace ***member-id*** with a value from 0 through 9.

node-group ***name***—(QFabric systems only) (Optional) Display the system software running on the Node group.

scc—(Routing matrix only) (Optional) Display the system software running on a TX Matrix router (or switch-card chassis).

sfc—(TX Matrix Plus routers only) (Optional) Display system software information for the TX Matrix Plus router.

Required Privilege Level

maintenance

Related Documentation

- *Routing Matrix with a TX Matrix Plus Router Solutions Page*

List of Sample Output

show system software on page 284
show system software (TX Matrix Plus Router) on page 284
show system software (QFX Series) on page 288

Output Fields When you enter this command, you are provided a list of Junos OS packages installed on the router and their corresponding Junos OS release number.

Sample Output

show system software

```
user@host> show system software
Information for jbase:

Comment:
JUNOS Base OS Software Suite [7.2R1.7]


Information for jcrypto:

Comment:
JUNOS Crypto Software Suite [7.2R1.7]
Information for jdocs:

Comment:
JUNOS Online Documentation [7.2R1.7]


Information for jkernel:

Comment:
JUNOS Kernel Software Suite [7.2R1.7]


Information for jpfe:

Comment:
JUNOS Packet Forwarding Engine Support (M20/M40) [7.2R1.7]


Information for jroute:

Comment:
JUNOS Routing Software Suite [7.2R1.7]


Information for junos:

Comment:
JUNOS Base OS boot [7.2R1.7]
```

show system software (TX Matrix Plus Router)

```
user@host> show system software
sfc0-re0:
--------------------------------------------------------------------------
Information for jbase:

Comment:
JUNOS Base OS Software Suite [9.6-20090515.0]



Information for jcrypto:

Comment:
JUNOS Crypto Software Suite [9.6-20090515.0]
```

```
Information for jdocs:

Comment:
JUNOS Online Documentation [9.6-20090515.0]
Information for jkernel:

Comment:
JUNOS Kernel Software Suite [9.6-20090515.0]



Information for jpfe:

Comment:
JUNOS Packet Forwarding Engine Support (T-Series) [9.6-20090515.0]



Information for jpfe-common:

Comment:
JUNOS Packet Forwarding Engine Support (M/T Common) [9.6-20090515.0]



Information for jroute:Comment:
JUNOS Routing Software Suite [9.6-20090515.0]



Information for jservices-aacl:

Comment:
JUNOS Services AACL Container package [9.6-20090515.0]



Information for jservices-appid:

Comment:
JUNOS AppId Services [9.6-20090515.0]



Information for jservices-bgf:

Comment:
JUNOS Border Gateway Function package [9.6-20090515.0]
Information for jservices-idp:

Comment:
JUNOS IDP Services [9.6-20090515.0]



Information for jservices-llpdf:

Comment:
JUNOS Services LL-PDF Container package [9.6-20090515.0]
```

```
Information for jservices-sfw:

Comment:
JUNOS Services Stateful Firewall [9.6-20090515.0]
Information for jservices-voice:

Comment:
JUNOS Voice Services Container package [9.6-20090515.0]



Information for junos:

Comment:
JUNOS Base OS boot [9.6-20090515.0]
...
lcc0-re0:
--------------------------------------------------------------------------
Information for jbase:

Comment:
JUNOS Base OS Software Suite [9.6-20090515.0]



Information for jcrypto:

Comment:
JUNOS Crypto Software Suite [9.6-20090515.0]



Information for jdocs:

Comment:
JUNOS Online Documentation [9.6-20090515.0]



Information for jkernel:

Comment:
JUNOS Kernel Software Suite [9.6-20090515.0]



Information for jpfe:

Comment:
JUNOS Packet Forwarding Engine Support (T-Series) [9.6-20090515.0]



Information for jpfe-common:

Comment:
JUNOS Packet Forwarding Engine Support (M/T Common) [9.6-20090515.0]
```

```
Information for jroute:

Comment:
JUNOS Routing Software Suite [9.6-20090515.0]


Information for jservices-aacl:

Comment:
JUNOS Services AACL Container package [9.6-20090515.0]


Information for jservices-appid:

Comment:
JUNOS AppId Services [9.6-20090515.0]


Information for jservices-bgf:

Comment:
JUNOS Border Gateway Function package [9.6-20090515.0]


Information for jservices-idp:

Comment:
JUNOS IDP Services [9.6-20090515.0]


Information for jservices-llpdf:

Comment:
JUNOS Services LL-PDF Container package [9.6-20090515.0]


Information for jservices-sfw:

Comment:
JUNOS Services Stateful Firewall [9.6-20090515.0]


Information for jservices-voice:

Comment:
JUNOS Voice Services Container package [9.6-20090515.0]


Information for junos:

Comment:
JUNOS Base OS boot [9.6-20090515.0]
```

```
lcc1-re0:
--------------------------------------------------------------------------
Information for jbase:

Comment:
JUNOS Base OS Software Suite [9.6-20090515.0]



Information for jcrypto:

Comment:
JUNOS Crypto Software Suite [9.6-20090515.0]
...
```

show system software (QFX Series)

```
user@switch> show system software
Information for jbase:

Comment:
JUNOS Base OS Software Suite [11.3-20110730.0]



Information for jcrypto:

Comment:
JUNOS Crypto Software Suite [11.3-20110730.0]



Information for jdocs:

Comment:
JUNOS Online Documentation [11.3-20110730.0]



Information for jkernel:

Comment:
JUNOS Kernel Software Suite [11.3-20110730.0]



Information for jpfe:

Comment:
JUNOS Packet Forwarding Engine Support (QFX) [11.3-20110730.0]



Information for jroute:

Comment:
JUNOS Routing Software Suite [11.3-20110730.0]



Information for jswitch:
```

```
Comment:
JUNOS Enterprise Software Suite [11.3-20110730.0]


Information for junos:

Comment:
JUNOS Base OS boot [11.3-20110730.0]


Information for jweb:

Comment:
JUNOS Web Management [11.3-20110730.0]
```

show system statistics

Syntax

show system statistics

Syntax (EX Series Switches)

show system statistics
<all-members>
<local>
<member *member-id*>

Syntax (TX Matrix Router)

show system statistics
<all-chassis | all-lcc | lcc *number* | scc>

Syntax (TX Matrix Plus Router)

show system statistics
<all-chassis | all-lcc | lcc *number* | sfc *number*>

Syntax (MX Series Router)

show system statistics
<all-members>
<local>
<member *member-id*>

Syntax (QFX Series)

show system statistics

Release Information

Command introduced before JUNOS Release 7.4.
Command introduced in Junos OS Release 9.0 for EX Series switches.
sfc option introduced for the TX Matrix Plus router in JUNOS Release 9.6.
Command introduced in Junos OS Release 11.1 for the QFX Series.

Description

Display system-wide protocol-related statistics.

Options

none—Display system statistics for all the following protocols:

- **arp**—Address Resolution Protocol
- **bridge**—IEEE 802.1 Bridging
- **clns**—Connectionless Network Service
- **esis**—End System-to-Intermediate System
- **ethoamcfm**—Ethernet OAM protocol for connectivity fault management
- **ethoamlfm**—Ethernet OAM protocol for link fault management
- **icmp**—Internet Control Message Protocol
- **icmp6**—Internet Control Message Protocol version 6
- **igmp**—Internet Group Management Protocol
- **ip**—Internet Protocol version 4
- **ip6**—Internet Protocol version 6
- **mpls**—Multiprotocol Label Switching
- **rdp**—Reliable Datagram Protocol

- **tcp**—Transmission Control Protocol
- **tnp**—Trivial Network Protocol
- **ttp**—TNP Tunneling Protocol
- **tudp**—Trivial User Datagram Protocol
- **udp**—User Datagram Protocol
- **vpls**—Virtual Private LAN Service

all-chassis—(TX Matrix and TX Matrix Plus routers only) (Optional) Display system statistics for a protocol for all the routers in the chassis.

all-lcc—(TX Matrix and TX Matrix Plus routers only) (Optional) On a TX Matrix router, display system statistics for a protocol for all T640 routers (or line-card chassis) connected to the TX Matrix router. On a TX Matrix Plus router, display system statistics for a protocol for all T1600 routers (or line-card chassis) connected to the TX Matrix Plus router

all-members—(EX4200 switches and MX Series routers only) (Optional) Display system statistics for a protocol for all members of the Virtual Chassis configuration.

lcc ***number***—(TX Matrix and TX Matrix Plus routers only) (Optional) On a TX Matrix router, display system statistics for a protocol for a specific T640 router that is connected to the TX Matrix router. On a TX Matrix Plus router, display system statistics for a protocol for a specific T1600 router that is connected to the TX Matrix Plus router. Replace ***number*** with a value from 0 through 3.

local—(EX4200 switches and MX Series routers only) (Optional) Display system statistics for a protocol for the local Virtual Chassis member.

member ***member-id***—(EX4200 switches and MX Series routers only) (Optional) Display system statistics for a protocol for the specified member of the Virtual Chassis configuration. For EX4200 switches, replace ***member-id*** with a value from 0 through 9. For an MX Series Virtual Chassis, replace ***member-id*** with a value of 0 or 1.

scc—(TX Matrix routers only) (Optional) Display system statistics for a protocol for the TX Matrix router (or switch-card chassis).

sfc ***number***—(TX Matrix Plus routers only) (Optional) Display system statistics for a protocol for the TX Matrix Plus router (or switch-fabric chassis). Replace ***number*** with 0.

Additional Information

By default, when you issue the **show system statistics** command on a TX Matrix or TX Matrix Plus master Routing Engine, the command is broadcast to all the T640 (in a routing matrix based on the TX Matrix router) or T1600 (in a routing matrix based on the TX Matrix Plus router) master Routing Engines connected to it. Likewise, if you issue the same command on the TX Matrix or TX Matrix Plus backup Routing Engine, the command is broadcast to all the T640 (in a routing matrix based on the TX Matrix router) or T1600 (in a routing matrix based on the TX Matrix Plus router) backup Routing Engines that are connected to it.

Required Privilege Level	view
List of Sample Output	show system statistics on page 293 show system statistics (EX Series Switches) on page 300 show system statistics (TX Matrix Router) on page 309 show system statistics (QFX Series) on page 315

Sample Output

show system statistics

```
user@host> show system statistics
ip:
        3682087 total packets received
        0 bad header checksums
        0 with size smaller than minimum
        0 with data size < data length
        0 with header length < data size
        0 with data length < header length
        0 with incorrect version number
        0 packets destined to dead next hop
        0 fragments received
        0 fragments dropped (dup or out of space)
        0 fragments dropped (queue overflow)
        0 fragments dropped after timeout
        0 fragments dropped due to over limit
        0 packets reassembled ok
        3664774 packets for this host
        17316 packets for unknown/unsupported protocol
        0 packets forwarded
        0 packets not forwardable
        0 redirects sent
        6528 packets sent from this host
        0 packets sent with fabricated ip header
        0 output packets dropped due to no bufs
        0 output packets discarded due to no route
        0 output datagrams fragmented
        0 fragments created
        0 datagrams that can't be fragmented
        0 packets with bad options
        1123 packets with options handled without error
        0 strict source and record route options
        0 loose source and record route options
        0 record route options
        0 timestamp options
        0 timestamp and address options
        0 timestamp and prespecified address options
        0 option packets dropped due to rate limit
        1123 router alert options
        0 multicast packets dropped (no iflist)
        0 packets dropped (src and int don't match)
icmp:
        0 drops due to rate limit
        0 calls to icmp_error
        0 errors not generated because old message was icmp
        Output histogram:
                echo reply: 75
        0 messages with bad code fields
        0 messages less than the minimum length
        0 messages with bad checksum
        0 messages with bad source address
        0 messages with bad length
        0 echo drops with broadcast or multicast destination address
        0 timestamp drops with broadcast or multicast destination address
        Input histogram:
                echo: 75
                router advertisement: 130
        75 message responses generated
tcp:
```

```
3844 packets sent
        3618 data packets (1055596 bytes)
        0 data packets (0 bytes) retransmitted
        0 resends initiated by MTU discovery
        205 ack-only packets (148 packets delayed)
        0 URG only packets
        0 window probe packets
        0 window update packets
        1079 control packets
5815 packets received
        3377 acks (for 1055657 bytes)
        24 duplicate acks
        0 acks for unsent data
        2655 packets (15004 bytes) received in-sequence
        1 completely duplicate packet  (0 bytes)
        0 old duplicate packets
        0 packets with some dup. data (0 bytes duped)
        0 out-of-order packets (0 bytes)
        0 packets (0 bytes) of data after window
        0 window probes
        7 window update packets
        0 packets received after close
        0 discarded for bad checksums
        0 discarded for bad header offset fields
        0 discarded because packet too short
1 connection request
32 connection accepts
0 bad connection attempts
0 listen queue overflows
33 connections established (including accepts)
30 connections closed (including 0 drops)
        27 connections updated cached RTT on close
        27 connections updated cached RTT variance on close
        0 connections updated cached ssthresh on close
0 embryonic connections dropped
3374 segments updated rtt (of 3220 attempts)
0 retransmit timeouts
        0 connections dropped by rexmit timeout
0 persist timeouts
        0 connections dropped by persist timeout
344 keepalive timeouts
        0 keepalive probes sent
        0 connections dropped by keepalive
1096 correct ACK header predictions
1314 correct data packet header predictions
32 syncache entries added
        0 retransmitted
        0 dupsyn
        0 dropped
        32 completed
        0 bucket overflow
        0 cache overflow
        0 reset
        0 stale
        0 aborted
        0 badack
        0 unreach
        0 zone failures
0 cookies sent
0 cookies received
0 ACKs sent in response to in-window but not exact RSTs
```

```
        0 ACKs sent in response to in-window SYNs on established connections
        0 rcv packets dropped by TCP due to bad address
        0 out-of-sequence segment drops due to insufficient memory
        1058 RST packets
        0 ICMP packets ignored by TCP
        0 send packets dropped by TCP due to auth errors
        0 rcv packets dropped by TCP due to auth errors
udp:
        3658884 datagrams received
        0 with incomplete header
        0 with bad data length field
        0 with bad checksum
        3657342 dropped due to no socket
        3657342 broadcast/multicast datagrams dropped due to no socket
        0 dropped due to full socket buffers
        0 not for hashed pcb
        4291311496 delivered
        1551 datagrams output
ipsec:
        0 inbound packets processed successfully
        0 inbound packets violated process security policy
        0 inbound packets with no SA available
        0 invalid inbound packets
        0 inbound packets failed due to insufficient memory
        0 inbound packets failed getting SPI
        0 inbound packets failed on AH replay check
        0 inbound packets failed on ESP replay check
        0 inbound AH packets considered authentic
        0 inbound AH packets failed on authentication
        0 inbound ESP packets considered authentic
        0 inbound ESP packets failed on authentication
        0 outbound packets processed successfully
        0 outbound packets violated process security policy
        0 outbound packets with no SA available
        0 invalid outbound packets
        0 outbound packets failed due to insufficient memory
        0 outbound packets with no route
igmp:
        17186 messages received
        0 messages received with too few bytes
        0 messages received with bad checksum
        0 membership queries received
        0 membership queries received with invalid field(s)
        0 membership reports received
        0 membership reports received with invalid field(s)
        0 membership reports received for groups to which we belong
        0 membership reports sent
arp:
        44181302 datagrams received
        2 ARP requests received
        2028 ARP replies received
        3156 resolution requests received
        0 unrestricted proxy requests
        0 received proxy requests
        0 proxy requests not proxied
        0 with bogus interface
        787 with incorrect length
        712 for non-IP protocol
        0 with unsupported op code
        0 with bad protocol address length
        0 with bad hardware address length
```

```
        0 with multicast source address
        7611 with multicast target address
        0 with my own hardware address
        14241699 for an address not on the interface
        0 with a broadcast source address
        0 with source address duplicate to mine
        29929250 which were not for me
        0 packets discarded waiting for resolution
        6 packets sent after waiting for resolution
        17812 ARP requests sent
        2 ARP replies sent
        0 requests for memory denied
        0 requests dropped on entry
        0 requests dropped during retry
ip6:
        0 total packets received
        0 with size smaller than minimum
        0 with data size < data length
        0 with bad options
        0 with incorrect version number
        0 fragments received
        0 fragments dropped (dup or out of space)
        0 fragments dropped after timeout
        0 fragments that exceeded limit
        0 packets reassembled ok
        0 packets for this host
        0 packets forwarded
        0 packets not forwardable
        0 redirects sent
        0 packets sent from this host
        0 packets sent with fabricated ip header
        0 output packets dropped due to no bufs, etc.
        0 output packets discarded due to no route
        0 output datagrams fragmented
        0 fragments created
        0 datagrams that can't be fragmented
        0 packets that violated scope rules
        0 multicast packets which we don't join
        Mbuf statistics:
        0 packets whose headers are not continuous
        0 tunneling packets that can't find gif
        0 packets discarded due to too may headers
        0 failures of source address selection
        0 forward cache hit
        0 forward cache miss
        0 packets destined to dead next hop
        0 option packets dropped due to rate limit
        0 packets dropped (src and int don't match)
        0 packets dropped due to bad protocol
icmp6:
        0 calls to icmp_error
        0 errors not generated because old message was icmp error or so
        0 errors not generated because rate limitation
        0 messages with bad code fields
        0 messages < minimum length
        0 bad checksums
        0 messages with bad length
        Histogram of error messages to be generated:
                0 no route
                0 administratively prohibited
                0 beyond scope
```

```
                0 address unreachable
                0 port unreachable
                0 packet too big
                0 time exceed transit
                0 time exceed reassembly
                0 erroneous header field
                0 unrecognized next header
                0 unrecognized option
                0 redirect
                0 unknown
        0 message responses generated
        0 messages with too many ND options
ipsec6:
        0 inbound packets processed successfully
        0 inbound packets violated process security policy
        0 inbound packets with no SA available
        0 invalid inbound packets
        0 inbound packets failed due to insufficient memory
        0 inbound packets failed getting SPI
        0 inbound packets failed on AH replay check
        0 inbound packets failed on ESP replay check
        0 inbound AH packets considered authentic
        0 inbound AH packets failed on authentication
        0 inbound ESP packets considered authentic
        0 inbound ESP packets failed on authentication
        0 outbound packets processed successfully
        0 outbound packets violated process security policy
        0 outbound packets with no SA available
        0 invalid outbound packets
        0 outbound packets failed due to insufficient memory
        0 outbound packets with no route
clnl:
        0 total packets received
        0 packets delivered
        0 too small
        0 bad header length
        0 bad checksum
        0 bad version
        0 unknown or unsupported protocol
        0 bogus sdl size
        0 no free memory in socket buffer
        0 send packets discarded
        0 sbappend failure
        0 mcopy failure
        0 address fields were not reasonable
        0 segment information forgotten
        0 forwarded packets
        0 total packets sent
        0 output packets discarded
        0 non-forwarded packets
        0 packets fragmented
        0 fragments sent
        0 fragments discarded
        0 fragments timed out
        0 fragmentation prohibited
        0 packets reconstructed
        0 packets destined to dead nexthop
        0 packets discarded due to no route
        0 Error pdu rate drops
        0 ER pdu generation failure
esis:
```

```
        0 total pkts received
        0 total packets consumed by protocol
        0 pdus received with bad checksum
        0 pdus received with bad version number
        0 pdus received with bad type field
        0 short pdus received
        0 bogus sdl size
        0 bad header length
        0 unknown or unsupported protocol
        0 no free memory in socket buffer
        0 send packets discarded
        0 sbappend failure
        0 mcopy failure
        0 ISO family not configured
tnp:
        146776365 unicast packets received
        0 broadcast packets received
        0 fragmented packets received
        0 hello packets dropped
        0 fragments dropped
        0 fragment reassembly queue flushes
        0 hello packets received
        0 control packets received
        49681642 rdp packets received
        337175 udp packets received
        96757548 tunnel packets received
        0 input packets discarded with no protocol
        98397591 unicast packets sent
        0 broadcast packets sent
        0 fragmented packets sent
        0 hello packets dropped
        0 fragments dropped
        0 hello packets sent
        0 control packets sent
        49681642 rdp packets sent
        337175 udp packets sent
        48378774 tunnel packets sent
        0 packets sent with unknown protocol
rdp:
        49681642 input packets
        0 discards for bad checksum
        0 discards bad sequence number
        0 refused connections
        2031964 acks received
        0 dropped due to full socket buffers
        49692 retransmits
        49681642 output packets
        24815968 acks sent
        28 connects
        0 closes
        22783990 keepalives received
        22783990 keepalives sent
tudp:
        337175 datagrams received
        0 with incomplete header
        0 with bad data length field
        0 with bad checksum
        0 dropped due to no socket
        0 broadcast/multicast datagrams dropped due to no socket
        0 dropped due to full socket buffers
        337175 delivered
```

```
        337175 datagrams output
ttp:
        398749 packets sent
        0 packets sent while unconnected
        0 packets sent while interface down
        0 packets sent couldn't get buffer
        0 packets sent couldn't find neighbor
        44696687 L2 packets received
        0 unknown L3 packets received
        3682087 IPv4 L3 packets received
        0 MPLS L3 packets received
        0 MPLS->IPv4 L3 packets received
        0 IPv4->MPLS L3 packets received
        0 IPv6 L3 packets received
        0 ARP L3 packets received
        0 CLNP L3 packets received
        0 TNP L3 packets received
        0 NULL L3 packets received
        0 cyclotron cycle L3 packets received
        0 cyclotron send L3 packets received
        0 packets received while unconnected
        0 packets received from unknown ifl
        0 input packets couldn't get buffer
        0 input packets with bad type
        0 input packets with discard type
        0 Input packets with too many tlvs
        0 Input packets with bad tlv header
        70633 Input packets with bad tlv type
        68877 Input packets dropped based on tlv result
        0 input packets for which rt lookup is bypassed
mpls:
        0 total mpls packets received
        0 packets forwarded
        0 packets dropped
        0 with header too small
        0 after tagging, can't fit link MTU
        0 with IPv4 explicit NULL tag
        0 with IPv4 explicit NULL cksum errors
        0 with router alert tag
        0 lsp ping packets (ttl-expired/router alert)
        0 with ttl expired
        0 with tag encoding error
        0 packets discarded, no route
vpls:
        0 total packets received
        0 with size smaller than minimum
        0 with incorrect version number
        0 packets for this host
        0 packets with no logical interface
        0 packets with no family
        0 packets with no route table
        0 packets with no auxiliary table
        0 packets with no corefacing entry
        0 packets with no CE-facing entry
        0 mac route learning requests
        0 mac routes learnt
        0 requests to learn an existing route
        0 learning requests while learning disabled on interface
        0 learning requests over capacity
        0 mac routes moved
        0 requests to move static route
```

```
                    0 mac route aging requests
                    0 mac routes aged
                    0 bogus address in aging requests
                    0 requests to age static route
                    0 requests to re-ageout aged route
                    0 requests involving multiple peer FEs
                    0 aging acks from PFE
                    0 aging non-acks from PFE
                    0 aging requests timed out waiting on FEs
                    0 aging requests over max-rate
                    0 errors finding peer FEs
```

show system statistics (EX Series Switches)

```
user@host> show system statistics
Tcp:
         571779 packets sent
                 21517 data packets (1797102 bytes)
                 2 data packets retransmitted (20 bytes)
                 0 resends initiated by MTU discovery
                 3708 ack only packets (531 packets delayed)
                 0 URG only packets
                 1 window probe packets
                 1 window update packets
                 1093063 control packets
         1132541 packets received
                 20961 acks(for 1796102 bytes)
                 5861 duplicate acks
                 0 acks for unsent data
                 19556  packets received in-sequence(232079 bytes)
                 3018 completely duplicate packets(0 bytes)
                 0 old duplicate packets
                 4 packets with some duplicate data(4 bytes duped)
                 2 out-of-order packets(2 bytes)
                 0 packets of data after window(0 bytes)
                 0 window probes
                 39 window update packets
                 0 packets received after close
                 0 discarded for bad checksums
                 0 discarded for bad header offset fields
                 0 discarded because packet too short
         546519 connection requests
         78 connection accepts
         0 bad connection attempts
         0 listen queue overflows
         100 connections established (including accepts)
         546596 connections closed (including 6 drops)
                 47 connections updated cached RTT on close
                 47 connections updated cached RTT variance on close
                 0 connections updated cached ssthresh on close
         546497 embryonic connections dropped
         20453 segments updated rtt(of 566914 attempts)
         2 retransmit timeouts
                 0 connections dropped by retransmit timeout
         0 persist timeouts
                 0 connections dropped by persist timeout
         3028 keepalive timeouts
                 3027 keepalive probes sent
                 1 connections dropped by keepalive
         7515 correct ACK header predictions
         12258 correct data packet header predictions
         78 syncache entries added
                 0 retransmitted
```

```
                0 dupsyn
                4 dropped
                78 completed
                0 bucket overflow
                0 cache overflow
                0 reset
                0 stale
                0 aborted
                0 badack
                0 unreach
                0 zone failures
        0 cookies sent
        0 cookies received
        1 SACK recovery episodes
        1 segment retransmits in SACK recovery episodes
        1 byte retransmits in SACK recovery episodes
        71 SACK options (SACK blocks) received
        1 SACK options (SACK blocks) sent
        0 SACK scoreboard overflow
        0 ACKs sent in response to in-window but not exact RSTs
        0 ACKs sent in response to in-window SYNs on established connections
        0 rcv packets dropped by TCP due to bad address
        0 out-of-sequence segment drops due to insufficient memory
        546544 RST packets
        0 ICMP packets ignored by TCP
        0 send packets dropped by TCP due to auth errors
        0 rcv packets dropped by TCP due to auth errors
        0 outgoing segments dropped due to policing
udp:
        147 datagrams received
        0 with incomplete header
        0 with bad data length field
        0 with bad checksum
        9 dropped due to no socket
        0 broadcast/multicast datagrams dropped due to no socket
        0 dropped due to full socket buffers
        0 not for hashed pcb
        138 delivered
        0 datagrams output
ip:
        73704 total packets received
        0 bad header checksums
        0 with size smaller than minimum
        0 with data size < data length
        0 with header length < data size
        0 with data length < header length
        0 with incorrect version number
        0 packets destined to dead next hop
        0 fragments received
        0 fragments dropped (dup or out of space)
        0 fragments dropped (queue overflow)
        0 fragments dropped after timeout
        0 fragments dropped due to over limit
        0 packets reassembled ok
        1133057 packets for this host
        0 packets for unknown/unsupported protocol
        40146 packets forwarded
        0 packets not forwardable
        40146 redirects sent
        1121700 packets sent from this host
        0 packets sent with fabricated ip header
```

```
          0 output packets dropped due to no bufs
          0 output packets discarded due to no route
          0 output datagrams fragmented
          0 fragments created
          0 datagrams that can't be fragmented
          0 packets with bad options
          0 packets with options handled without error
          0 strict source and record route options
          0 loose source and record route options
          0 record route options
          0 timestamp options
          0 timestamp and address options
          0 timestamp and prespecified address options
          0 option packets dropped due to rate limit
          0 router alert options
          0 multicast packets dropped (no iflist)
          0 packets dropped (src and int don't match)
          0 transit re packets dropped on mgmt i/f
          0 packets used first nexthop in ecmp unilist
          0 incoming ttpoip packets received
          0 incoming ttpoip packets dropped
           0 outgoing TTPoIP packets sent
          0 outgoing TTPoIP packets dropped
icmp:
          0 drops due to rate limit
          9 calls to icmp_error
          0 errors not generated because old message was icmp
          Output histogram:
                  295 echo reply
                  9 destination unreachable
          0 messages with bad code fields
          0 messages less than the minimum length
          0 messages with bad checksum
          0 messages with bad source address
          0 messages with bad length
          0 echo drops with broadcast or multicast destinaton address
          0 timestamp drops with broadcast or multicast destination address
          Input histogram:
                  295 echo
          295 message responses generated
igmp:
          0 messages received
          0 messages received with too few bytes
          0 messages received with bad checksum
          0 membership queries received
          0 membership queries received with invalid fields
          0 membership reports received
          0 membership reports received with invalid fields
          0 membership reports received for groups to which we belong
          0 Membership reports sent
raw_if:
          0 RAW packets transmitted
          0 PPPOE packets transmitted
          0 ISDN packets transmitted
          0 DIALER packets transmitted
          0 PPP packets transmitted to pppd
          0 PPP packets transmitted to jppd
          0 IGMPL2 packets transmitted
          13 output drops due to tx error
          0 MPU packets transmitted
          0 PPPOE packets received
```

```
        0 ISDN packets received
        0 DIALER packets received
        0 PPP packets received from pppd
        0 MPU packets received
        0 PPP packets received from jppd
        0 IGMPL2 packets received
        0 Input drops due to bogus protocol
        0 input drops due to no mbufs available
        0 input drops due to no space in socket
        0 input drops due to no socket
arp:
        186413 datagrams received
        88 ARP requests received
        88 ARP replies received
        0 resolution request  received
        0 unrestricted proxy requests
        0 restricted proxy requests
        0 received proxy requests
        0 proxy requests not proxied
        0 restricted proxy requests not proxied
        0 datagrams with bogus interface
        0 datagrams with incorrect length
        0 datagrams for non-IP protocol
        0 datagrams with unsupported op code
        0 datagrams with bad protocol address length
         0 datagrams with bad hardware address length
        0 datagrams with multicast source address
        0 datagrams with multicast source address
        0 datagrams with my own hardware address
        164 datagrams for an address not on the interface
        0 datagrams with a broadcast source address
        0 datagrams with source address duplicate to mine
        186065 datagrams which were not for me
        0 packets discarded waiting for resolution
        0 packets sent after waiting for resolution
        50 ARP requests sent
        88 ARP replies sent
        0 requests for memory denied
        0 requests dropped on entry
        0 requests dropped during retry
        0 requests dropped due to interface deletion
        0 requests on unnumbered interfaces
        0 new requests on unnumbered interfaces
        0 replies for from unnumbered interfaces
        0 requests on unnumbered interface with non-subnetted donor
        0 replies from unnumbered interface with non-subnetted donor
ip6:
        0 total packets received
        0 packets with size smaller than minimum
        0 packets with data size < data length
        0 packets with bad options
        0 packets with incorrect version number
        0 fragments received
        0 fragments dropped (dup or out of space)
        0 fragments dropped after timeout
        0 fragments that exceeded limit
        0 packets reassembled ok
        0 packets for this host
        0 packets forwarded
        0 packets not forwardable
        0 redirects sent
```

```
        0 packets sent from this host
        0 packets sent with fabricated ip header
        0 output packets dropped due to no bufs, etc.
        0 output datagrams fragmented
        0 fragments created
        0 datagrams that can't be fragmented
        0 packets that violated scope rules
        0 multicast packets which we don't join
        0 packets whose headers are not continuous
        0 tunneling packets that can't find gif
        0 packets discarded due to too may headers
        0 failures of source address selection
        0 forward cache hit
        0 forward cache miss
        0 Packets destined to dead next hop
        0 option packets dropped due to rate limit
        0 Packets dropped (src and int don't match)
        0 packets dropped due to bad protocol
        0 transit re packet(null) dropped on mgmt i/f
icmp6:
        0 Calls to icmp_error
        0 Errors not generated because old message was icmp error
        0 Errors not generated because rate limitation
        0 Messages with bad code fields
        0 Messages < minimum length
        0 Bad checksums
        0 Messages with bad length
                0 No route
                0 Administratively prohibited
                 0 Beyond scope
                0 Address unreachable
                0 Port unreachable
                0 packet too big
                0 Time exceed transit
                0 Time exceed reassembly
                0 Erroneous header field
                0 Unrecognized next header
                0 Unrecognized option
                0 redirect
                0 Unknown
        0 Message responses generated
        0 Messages with too many ND options
pfkey:
        0 Requests sent from userland
        0 Bytes sent from userland
        histogram by message type:
                0 reserved
                0 dump
        0 Messages with invalid length field
        0 Messages with invalid version field
        0 Messages with invalid message type field
        0 Messages too short
        0 Messages with memory allocation failure
        0 Messages with duplicate extension
        0 Messages with invalid extension type
        0 Messages with invalid sa type
        0 Messages with invalid address extension
        0 Requests sent to userland
        0 Bytes sent to userland
        histogram by message type:
                0 reserved
```

```
                0 dump
          0 Messages toward single socket
          0 Messages toward all sockets
          0 Messages toward registered sockets
          0 Messages with memory allocation failure
clnl:
          0 Total packets received
          0 Packets delivered
          0 Too small packets
          0 Packets with bad header length
          0 Packets with bad checksum
          0 Bad version packets
          0 Unknown or unsupported protocol packets
          0 Packets with bogus sdl size
          0 No free memory in socket buffer
          0 Send packets discarded
          0 Sbappend failure
          0 Mcopy failure
          0 Address fields were not reasonable
          0 Segment information forgotten
          0 Forwarded packets
          0 Total packets sent
          0 Output packets discarded
          0 Non-forwarded packets
          0 Packets fragmented
          0 Fragments sent
          0 Fragments discarded
          0 Fragments timed out
          0 Fragmentation prohibited
          0 Packets reconstructed
          0 Packets destined to dead nexthop
          0 Packets discarded due to no route
          0 Error pdu rate drops
           0 ER pdu generation failure
esis:
          0 Total pkts received
          0 Total packets consumed by protocol
          0 Pdus received with bad checksum
          0 Pdus received with bad version number
          0 Pdus received with bad type field
          0 Short pdus received
          0 Pdus withbogus sdl size
          0 Pdus with bad header length
          0 Pdus with unknown or unsupport protocol
          0 No free memory in socket buffer
          0 Send packets discarded
          0 Sbappend failure
          0 Mcopy failure
          0 ISO family not configured
tnp:
          0 Unicast packets received
          0 Broadcast packets received
          0 Fragmented packets received
          0 Hello packets dropped
          0 Fragments dropped
          0 Fragment reassembly queue flushes
          0 Packets with tnp src address collision received
          0 Hello packets received
          0 Control packets received
          0 Rdp packets received
          0 Udp packets received
```

```
            0 Tunnel packets received
            0 Input packets discarded with no protocol
            0 Packets of version unspecified received
            0 Packets of version 1 received
            0 Packets of version 2 received
            0 Packets of version 3 received
            0 Unicast packets sent
            0 Broadcast packets sent
            0 Fragmented packets sent
            0 Hello packets dropped
            0 Fragments dropped
            0 Hello packets sent
            0 Control packets sent
            0 Rdp packets sent
            0 Udp packets sent
            0 Tunnel packets sent
            0 Packets sent with unknown protocol
            0 Packets of version unspecified sent
            0 Packets of version 1 sent
            0 Packets of version 2 sent
            0 Packets of version 3 sent
    rdp:
            0 Input packets
            0 Packets discarded for bad checksum
            0 Packets discarded due to bad sequence number
            0 Refused connections
            0 Acks received
            0 Packets dropped due to full socket buffers
            0 Retransmits
            0 Output packets
            0 Acks sent
            0 Connects
            0 Closes
            0 Keepalives received
            0 Keepalives sent
    tudp:
            67 Datagrams received
            0 Datagrams with incomplete header
            0 Datagrams with bad data length field
            0 Datagrams with bad checksum
            0 Datagrams dropped due to no socket
            0 Broadcast/multicast datagrams dropped due to no socket
            0 Datagrams dropped due to full socket buffers
            67 Delivered
            68 Datagrams output
    ttp:
            0 Packets sent
            0 Packets sent while unconnected
            0 Packets sent while interface down
            0 Packets sent couldn't get buffer
            0 Packets sent couldn't find neighbor
            0 L2 packets received
            0 Unknown L3 packets received
            0 IPv4 L3 packets received
            0 MPLS L3 packets received
            0 MPLS->IPV4 L3 packets received
            0 IPv4->MPLS L3 packets received
            0 IPv6 L3 packets received
            0 ARP L3 packets received
            0 CLNP L3 packets received
            0 TNP L3 packets received
```

```
            0 NULL L3 packets received
            0 Cyclotron cycle L3 packets received
            0 Cyclotron send L3 packets received
            0 Packets received while unconnected
            0 Packets received from unknown ifl
            0 Input packets couldn't get buffer
            0 Input packets with bad type
            0 Input packets with discard type
            0 Input packets with too many tlvs
            0 Input packets with bad tlv header
            70633 Input packets with bad tlv type
            68877 Input packets dropped based on tlv result
            0 Input packets for which rt lookup is bypassed
mpls:
            0 Total MPLS packets received
            0 Packets forwarded
            0 Packets dropped
            0 Packets with header too small
            0 After tagging, packets can't fit link MTU
            0 Packets with IPv4 explicit NULL tag
            0 Packets with IPv4 explicit NULL cksum errors
            0 Packets with router alert tag
            0 LSP ping packets (ttl-expired/router alert)
            0 Packets with ttl expired
            0 Packets with tag encoding error
            0 Packets discarded due to no route
            0 Packets used first nexthop in ecmp unilist
vpls:
            0 Total packets received
            0 Packets with size smaller than minimum
            0 Packets with incorrect version number
            0 Packets for this host
            0 Packets with no logical interface
            0 Packets with no family
            0 Packets with no route table
            0 Packets with no auxiliary table
            0 Packets with no corefacing entry
            0 packets with no CE-facing entry
            0 MAC route learning requests
            0 MAC routes learnt
            0 Requests to learn an existing route
            0 Learning requests while learning disabled on interface
            0 Learning requests over capacity
            0 MAC routes moved
            0 Requests to move static route
            0 MAC route aging requests
            0 MAC routes aged
            0 Bogus address in aging requests
            0 Requests to age static route
            0 Requests to re-ageout aged route
            0 Requests involving multiple peer FEs
            0 Aging acks from PFE
            0 Aging non-acks from PFE
            0 Aging requests timed out waiting on FEs
            0 Aging requests over max-rate
            0 Errors finding peer FEs
            0 Unsupported platform
            0 Packets dropped due to no l3 route table
            0 Packets dropped due to no local ifl
            0 Packets punted
            0 Packets dropped due to no socket
```

```
bridge:
        Input:
        0 packets received
        0 packets forwarded
        0 packets failed to forward
        0 packets dropped
        0 packets with vmember lookup failures
        0 packets with vlan lookup failures
        0 packets with stp state lookup failures
        0 packets dropped due to stp blocked/listening
        0 packets dropped due to stp learning
        0 packets with src MAC learning failures
        0 packets with input control processing failures
        Forward:
        0 packets sent successfully
        0 packets with send failures
        0 packets forwarded to l3 interface
        0 packets with l3 send failures
        0 packets discarded
        0 packets with l2ifl store failures
        0 packets with ifl mismatch failures
        0 packets with packet duplication failures
        0 packets with tag lookup failures
        0 packets with no route for DMAC
        0 packets with no route table
        0 packets with no nexthop
        0 packets with dead nexthop
        0 packets with eof reached error
        Learning:
        0 MACs learned
        0 packets sent to l3 interface
        0 packets with l3 send failures
        0 packets hit holdq while learning
        0 MAC moves
        0 packets discarded
        0 packets with no route for SMAC
        0 packets with no nexthop
        0 packets with dead nexthop
        0 packets dropped due to no resolve route
        0 packets with l3 ifd lookup failures
        0 packets with l3 ifl lookup failures
        0 packets with l3 invalid rnh
        0 packets with no route for SMAC in clone learning
        0 packets with no nexhop in clone learning
        0 packets with dead nexthop in clone learning
        0 packets dropped due to no resolve nh in clone learning
        Output:
        0 packets forwarded
        0 packets failed to forward
        0 packets with vmember lookup failures
         0 packets with vlan lookup failures
        0 packets with input control processing failures
        Send:
        0 packets sent successfully
        0 packets with send failures
        0 packets dropped due to interface down
        0 packets with dev output failures
        0 blocked ifl discards
        0 packets with tag lookup failures
        0 packets with stp state lookup failures
        0 packets with tag insertion failures
```



```
        0 packets with tag removal failures
        Flood:
        0 packets flooded
        0 flood failures
        IGMP:
        0 packets sent successfully
        0 packets with send failures
        0 packets forwarded
        0 packets failed to forward
        0 packets with mpull failures
        0 packets with vmember lookup failures
        0 packets with vlan lookup failures
        0 packets with ifl lookup failures
        0 packets with tag lookup failures
        Misc:
        0 packets with size smaller than minimum
        0 packets with double tags
        0 packets with no ifl
        0 packets with no family
        0 packets with no route table
```

show system statistics (TX Matrix Router)

```
user@host> show system statistics
sfc0-re0:
--------------------------------------------------------------------------
Tcp:
        361694 packets sent
                326507 data packets (103237236 bytes)
                2343 data packets retransmitted (2673324 bytes)
                0 resends initiated by MTU discovery
                33857 ack only packets (31613 packets delayed)
                0 URG only packets
                14 window probe packets
                387 window update packets
                1108 control packets
        345879 packets received
                298207 acks(for 103141728 bytes)
                438 duplicate acks
                0 acks for unsent data
                204578  packets received in-sequence(13820995 bytes)
                6 completely duplicate packets(18 bytes)
                0 old duplicate packets
                0 packets with some duplicate data(0 bytes duped)
                0 out-of-order packets(0 bytes)
                0 packets of data after window(0 bytes)
                0 window probes
                899 window update packets
                166 packets received after close
                0 discarded for bad checksums
                0 discarded for bad header offset fields
                0 discarded because packet too short
        406 connection requests
        233 connection accepts
        0 bad connection attempts
        0 listen queue overflows
        616 connections established (including accepts)
        911 connections closed (including 41 drops)
                346 connections updated cached RTT on close
                346 connections updated cached RTT variance on close
                200 connections updated cached ssthresh on close
        23 embryonic connections dropped
        298155 segments updated rtt(of 287216 attempts)
```

```
            1163 retransmit timeouts
                    27 connections dropped by retransmit timeout
            0 persist timeouts
                    0 connections dropped by persist timeout
            5 keepalive timeouts
                    5 keepalive probes sent
                    0 connections dropped by keepalive
            69922 correct ACK header predictions
            34993 correct data packet header predictions
            233 syncache entries added
                    0 retransmitted
                    0 dupsyn
                    0 dropped
                    233 completed
                    0 bucket overflow
                    0 cache overflow
                    0 reset
                    0 stale
                    0 aborted
                    0 badack
                    0 unreach
                    0 zone failures
            0 cookies sent
            0 cookies received
            23 SACK recovery episodes
            68 segment retransmits in SACK recovery episodes
            71542 byte retransmits in SACK recovery episodes
            158 SACK options (SACK blocks) received
            0 SACK options (SACK blocks) sent
            0 SACK scoreboard overflow
            0 ACKs sent in response to in-window but not exact RSTs
            0 ACKs sent in response to in-window SYNs on established connections
            0 rcv packets dropped by TCP due to bad address
            0 out-of-sequence segment drops due to insufficient memory
            259 RST packets
            0 ICMP packets ignored by TCP
            0 send packets dropped by TCP due to auth errors
            0 rcv packets dropped by TCP due to auth errors
            0 outgoing segments dropped due to policing

    lcc0-re0:
    --------------------------------------------------------------------------
    Tcp:
            346 packets sent
                    222 data packets (22894 bytes)
                    0 data packets retransmitted (0 bytes)
                    0 resends initiated by MTU discovery
                    80 ack only packets (12 packets delayed)
                    0 URG only packets
                    0 window probe packets
                    5 window update packets
                    42 control packets
            358 packets received
                    268 acks(for 22939 bytes)
                    9 duplicate acks
                    0 acks for unsent data
                    203  packets received in-sequence(33820 bytes)
                    0 completely duplicate packets(0 bytes)
                    0 old duplicate packets
                    0 packets with some duplicate data(0 bytes duped)
                    0 out-of-order packets(0 bytes)
```



```
                0 packets of data after window(0 bytes)
                0 window probes
                6 window update packets
                0 packets received after close
                0 discarded for bad checksums
                0 discarded for bad header offset fields
                0 discarded because packet too short
        13 connection requests
        18 connection accepts
        0 bad connection attempts
        0 listen queue overflows
        31 connections established (including accepts)
        35 connections closed (including 2 drops)
                3 connections updated cached RTT on close
                3 connections updated cached RTT variance on close
                0 connections updated cached ssthresh on close
        0 embryonic connections dropped
        268 segments updated rtt(of 247 attempts)
        0 retransmit timeouts
                0 connections dropped by retransmit timeout
        0 persist timeouts
                0 connections dropped by persist timeout
        0 keepalive timeouts
                0 keepalive probes sent
                0 connections dropped by keepalive
        0 correct ACK header predictions
        42 correct data packet header predictions
        18 syncache entries added
                0 retransmitted
                0 dupsyn
                0 dropped
                18 completed
                0 bucket overflow
                0 cache overflow
                0 reset
                0 stale
                0 aborted
                0 badack
                0 unreach
                0 zone failures
        0 cookies sent
        0 cookies received
        0 SACK recovery episodes
        0 segment retransmits in SACK recovery episodes
        0 byte retransmits in SACK recovery episodes
        0 SACK options (SACK blocks) received
        0 SACK options (SACK blocks) sent
        0 SACK scoreboard overflow
        0 ACKs sent in response to in-window but not exact RSTs
        0 ACKs sent in response to in-window SYNs on established connections
        0 rcv packets dropped by TCP due to bad address
        0 out-of-sequence segment drops due to insufficient memory
        5 RST packets
        0 ICMP packets ignored by TCP
        0 send packets dropped by TCP due to auth errors
        0 rcv packets dropped by TCP due to auth errors
        0 outgoing segments dropped due to policing

lcc1-re0:
--------------------------------------------------------------------------
Tcp:
```

```
348 packets sent
        223 data packets (22895 bytes)
        0 data packets retransmitted (0 bytes)
        0 resends initiated by MTU discovery
        81 ack only packets (13 packets delayed)
        0 URG only packets
        0 window probe packets
        5 window update packets
        42 control packets
360 packets received
        269 acks(for 22940 bytes)
        9 duplicate acks
        0 acks for unsent data
        203  packets received in-sequence(33820 bytes)
        0 completely duplicate packets(0 bytes)
        0 old duplicate packets
        0 packets with some duplicate data(0 bytes duped)
        0 out-of-order packets(0 bytes)
        0 packets of data after window(0 bytes)
        0 window probes
        6 window update packets
        0 packets received after close
        0 discarded for bad checksums
        0 discarded for bad header offset fields
        0 discarded because packet too short
13 connection requests
18 connection accepts
0 bad connection attempts
0 listen queue overflows
31 connections established (including accepts)
36 connections closed (including 2 drops)
        3 connections updated cached RTT on close
        3 connections updated cached RTT variance on close
        0 connections updated cached ssthresh on close
0 embryonic connections dropped
269 segments updated rtt(of 248 attempts)
0 retransmit timeouts
        0 connections dropped by retransmit timeout
0 persist timeouts
        0 connections dropped by persist timeout
0 keepalive timeouts
        0 keepalive probes sent
        0 connections dropped by keepalive
0 correct ACK header predictions
43 correct data packet header predictions
18 syncache entries added
        0 retransmitted
        0 dupsyn
        0 dropped
        18 completed
        0 bucket overflow
        0 cache overflow
        0 reset
        0 stale
        0 aborted
        0 badack
        0 unreach
        0 zone failures
0 cookies sent
0 cookies received
0 SACK recovery episodes
```

```
          0 segment retransmits in SACK recovery episodes
          0 byte retransmits in SACK recovery episodes
          0 SACK options (SACK blocks) received
          0 SACK options (SACK blocks) sent
          0 SACK scoreboard overflow
          0 ACKs sent in response to in-window but not exact RSTs
          0 ACKs sent in response to in-window SYNs on established connections
          0 rcv packets dropped by TCP due to bad address
          0 out-of-sequence segment drops due to insufficient memory
          5 RST packets
          0 ICMP packets ignored by TCP
          0 send packets dropped by TCP due to auth errors
          0 rcv packets dropped by TCP due to auth errors
          0 outgoing segments dropped due to policing

lcc2-re0:
--------------------------------------------------------------------------
Tcp:
          405 packets sent
                  271 data packets (23926 bytes)
                  0 data packets retransmitted (0 bytes)
                  0 resends initiated by MTU discovery
                  86 ack only packets (13 packets delayed)
                  0 URG only packets
                  0 window probe packets
                  5 window update packets
                  46 control packets
          418 packets received
                  321 acks(for 23975 bytes)
                  9 duplicate acks
                  0 acks for unsent data
                  234  packets received in-sequence(34403 bytes)
                  0 completely duplicate packets(0 bytes)
                  0 old duplicate packets
                  0 packets with some duplicate data(0 bytes duped)
                  0 out-of-order packets(0 bytes)
                  0 packets of data after window(0 bytes)
                  0 window probes
                  7 window update packets
                  0 packets received after close
                  0 discarded for bad checksums
                  0 discarded for bad header offset fields
                  0 discarded because packet too short
          15 connection requests
          19 connection accepts
          0 bad connection attempts
          0 listen queue overflows
          34 connections established (including accepts)
          39 connections closed (including 2 drops)
                  4 connections updated cached RTT on close
                  4 connections updated cached RTT variance on close
                  0 connections updated cached ssthresh on close
          0 embryonic connections dropped
          321 segments updated rtt(of 299 attempts)
          0 retransmit timeouts
                  0 connections dropped by retransmit timeout
          0 persist timeouts
                  0 connections dropped by persist timeout
          0 keepalive timeouts
                  0 keepalive probes sent
                  0 connections dropped by keepalive
```

```
        0 correct ACK header predictions
        48 correct data packet header predictions
        19 syncache entries added
                0 retransmitted
                0 dupsyn
                0 dropped
                19 completed
                0 bucket overflow
                0 cache overflow
                0 reset
                0 stale
                0 aborted
                0 badack
                0 unreach
                0 zone failures
        0 cookies sent
        0 cookies received
        0 SACK recovery episodes
        0 segment retransmits in SACK recovery episodes
        0 byte retransmits in SACK recovery episodes
        0 SACK options (SACK blocks) received
        0 SACK options (SACK blocks) sent
        0 SACK scoreboard overflow
        0 ACKs sent in response to in-window but not exact RSTs
        0 ACKs sent in response to in-window SYNs on established connections
        0 rcv packets dropped by TCP due to bad address
        0 out-of-sequence segment drops due to insufficient memory
        5 RST packets
        0 ICMP packets ignored by TCP
        0 send packets dropped by TCP due to auth errors
        0 rcv packets dropped by TCP due to auth errors
        0 outgoing segments dropped due to policing

lcc3-re0:
--------------------------------------------------------------------------
Tcp:
        346 packets sent
                221 data packets (22895 bytes)
                0 data packets retransmitted (0 bytes)
                0 resends initiated by MTU discovery
                81 ack only packets (13 packets delayed)
                0 URG only packets
                0 window probe packets
                5 window update packets
                42 control packets
        360 packets received
                267 acks(for 22940 bytes)
                9 duplicate acks
                0 acks for unsent data
                203  packets received in-sequence(33820 bytes)
                0 completely duplicate packets(0 bytes)
                0 old duplicate packets
                0 packets with some duplicate data(0 bytes duped)
                0 out-of-order packets(0 bytes)
                0 packets of data after window(0 bytes)
                0 window probes
                6 window update packets
                0 packets received after close
                0 discarded for bad checksums
                0 discarded for bad header offset fields
                0 discarded because packet too short
```

```
13 connection requests
18 connection accepts
0 bad connection attempts
0 listen queue overflows
31 connections established (including accepts)
35 connections closed (including 2 drops)
        3 connections updated cached RTT on close
        3 connections updated cached RTT variance on close
        0 connections updated cached ssthresh on close
0 embryonic connections dropped
267 segments updated rtt(of 246 attempts)
0 retransmit timeouts
        0 connections dropped by retransmit timeout
0 persist timeouts
        0 connections dropped by persist timeout
0 keepalive timeouts
        0 keepalive probes sent
        0 connections dropped by keepalive
0 correct ACK header predictions
43 correct data packet header predictions
18 syncache entries added
        0 retransmitted
        0 dupsyn
        0 dropped
        18 completed
        0 bucket overflow
        0 cache overflow
        0 reset
        0 stale
        0 aborted
        0 badack
        0 unreach
        0 zone failures
0 cookies sent
0 cookies received
0 SACK recovery episodes
0 segment retransmits in SACK recovery episodes
0 byte retransmits in SACK recovery episodes
0 SACK options (SACK blocks) received
0 SACK options (SACK blocks) sent
0 SACK scoreboard overflow
0 ACKs sent in response to in-window but not exact RSTs
0 ACKs sent in response to in-window SYNs on established connections
0 rcv packets dropped by TCP due to bad address
0 out-of-sequence segment drops due to insufficient memory
5 RST packets
0 ICMP packets ignored by TCP
0 send packets dropped by TCP due to auth errors
0 rcv packets dropped by TCP due to auth errors
0 outgoing segments dropped due to policing
```

show system statistics (QFX Series)

```
user@switch> show system statistics
Tcp:
571779 packets sent
21517 data packets (1797102 bytes)
2 data packets retransmitted (20 bytes)
0 resends initiated by MTU discovery
3708 ack only packets (531 packets delayed)
0 URG only packets
1 window probe packets
1 window update packets
```

```
1093063 control packets
1132541 packets received
20961 acks(for 1796102 bytes)
5861 duplicate acks
0 acks for unsent data
19556 packets received in-sequence(232079 bytes)
3018 completely duplicate packets(0 bytes)
0 old duplicate packets
4 packets with some duplicate data(4 bytes duped)
2 out-of-order packets(2 bytes)
0 packets of data after window(0 bytes)
0 window probes
39 window update packets
0 packets received after close
0 discarded for bad checksums
0 discarded for bad header offset fields
0 discarded because packet too short
546519 connection requests
78 connection accepts
0 bad connection attempts
0 listen queue overflows
100 connections established (including accepts)
546596 connections closed (including 6 drops)
47 connections updated cached RTT on close
47 connections updated cached RTT variance on close
0 connections updated cached ssthresh on close
546497 embryonic connections dropped
20453 segments updated rtt(of 566914 attempts)
2 retransmit timeouts
0 connections dropped by retransmit timeout
0 persist timeouts
0 connections dropped by persist timeout
3028 keepalive timeouts
3027 keepalive probes sent
1 connections dropped by keepalive
7515 correct ACK header predictions
12258 correct data packet header predictions
78 syncache entries added
0 retransmitted
0 dupsyn
4 dropped
78 completed
0 bucket overflow
0 cache overflow
0 reset
0 stale
0 aborted
0 badack
0 unreach
0 zone failures
0 cookies sent
0 cookies received
1 SACK recovery episodes
1 segment retransmits in SACK recovery episodes
1 byte retransmits in SACK recovery episodes
71 SACK options (SACK blocks) received
1 SACK options (SACK blocks) sent
0 SACK scoreboard overflow
0 ACKs sent in response to in-window but not exact RSTs
0 ACKs sent in response to in-window SYNs on established connections
0 rcv packets dropped by TCP due to bad address
```



```
0 out-of-sequence segment drops due to insufficient memory
546544 RST packets
0 ICMP packets ignored by TCP
0 send packets dropped by TCP due to auth errors
0 rcv packets dropped by TCP due to auth errors
0 outgoing segments dropped due to policing
udp:
147 datagrams received
0 with incomplete header
0 with bad data length field
0 with bad checksum
9 dropped due to no socket
0 broadcast/multicast datagrams dropped due to no socket
0 dropped due to full socket buffers
0 not for hashed pcb
138 delivered
0 datagrams output
ip:
73704 total packets received
0 bad header checksums
0 with size smaller than minimum
0 with data size < data length
0 with header length < data size
0 with data length < header length
0 with incorrect version number
0 packets destined to dead next hop
0 fragments received
0 fragments dropped (dup or out of space)
0 fragments dropped (queue overflow)
0 fragments dropped after timeout
0 fragments dropped due to over limit
0 packets reassembled ok
1133057 packets for this host
0 packets for unknown/unsupported protocol
40146 packets forwarded
0 packets not forwardable
40146 redirects sent
1121700 packets sent from this host
0 packets sent with fabricated ip header
0 output packets dropped due to no bufs
0 output packets discarded due to no route
0 output datagrams fragmented
0 fragments created
0 datagrams that can't be fragmented
0 packets with bad options
0 packets with options handled without error
0 strict source and record route options
0 loose source and record route options
0 record route options
0 timestamp options
0 timestamp and address options
0 timestamp and prespecified address options
0 option packets dropped due to rate limit
0 router alert options
0 multicast packets dropped (no iflist)
0 packets dropped (src and int don't match)
0 transit re packets dropped on mgmt i/f
0 packets used first nexthop in ecmp unilist
0 incoming ttpoip packets received
0 incoming ttpoip packets dropped
0 outgoing TTPoIP packets sent
```

```
0 outgoing TTPoIP packets dropped
icmp:
0 drops due to rate limit
9 calls to icmp_error
0 errors not generated because old message was icmp
Output histogram:
295 echo reply
9 destination unreachable
0 messages with bad code fields
0 messages less than the minimum length
0 messages with bad checksum
0 messages with bad source address
0 messages with bad length
0 echo drops with broadcast or multicast destinaton address
0 timestamp drops with broadcast or multicast destination address
Input histogram:
295 echo
295 message responses generated
igmp:
0 messages received
0 messages received with too few bytes
0 messages received with bad checksum
0 membership queries received
0 membership queries received with invalid fields
0 membership reports received
0 membership reports received with invalid fields
0 membership reports received for groups to which we belong
0 Membership reports sent
raw_if:
0 RAW packets transmitted
0 PPPOE packets transmitted
0 ISDN packets transmitted
0 DIALER packets transmitted
0 PPP packets transmitted to pppd
0 PPP packets transmitted to jppd
0 IGMPL2 packets transmitted
13 output drops due to tx error
0 MPU packets transmitted
0 PPPOE packets received
0 ISDN packets received
0 DIALER packets received
0 PPP packets received from pppd
0 MPU packets received
0 PPP packets received from jppd
0 IGMPL2 packets received
0 Input drops due to bogus protocol
0 input drops due to no mbufs available
0 input drops due to no space in socket
0 input drops due to no socket
arp:
186413 datagrams received
88 ARP requests received
88 ARP replies received
0 resolution request received
0 unrestricted proxy requests
0 restricted proxy requests
0 received proxy requests
0 proxy requests not proxied
0 restricted proxy requests not proxied
0 datagrams with bogus interface
0 datagrams with incorrect length
```



```
0 datagrams for non-IP protocol
0 datagrams with unsupported op code
0 datagrams with bad protocol address length
0 datagrams with bad hardware address length
0 datagrams with multicast source address
0 datagrams with multicast source address
0 datagrams with my own hardware address
164 datagrams for an address not on the interface
0 datagrams with a broadcast source address
0 datagrams with source address duplicate to mine
186065 datagrams which were not for me
0 packets discarded waiting for resolution
0 packets sent after waiting for resolution
50 ARP requests sent
88 ARP replies sent
0 requests for memory denied
0 requests dropped on entry
0 requests dropped during retry
0 requests dropped due to interface deletion
0 requests on unnumbered interfaces
0 new requests on unnumbered interfaces
0 replies for from unnumbered interfaces
0 requests on unnumbered interface with non-subnetted donor
0 replies from unnumbered interface with non-subnetted donor
ip6:
0 total packets received
0 packets with size smaller than minimum
0 packets with data size < data length
0 packets with bad options
0 packets with incorrect version number
0 fragments received
0 fragments dropped (dup or out of space)
0 fragments dropped after timeout
0 fragments that exceeded limit
0 packets reassembled ok
0 packets for this host
0 packets forwarded
0 packets not forwardable
0 redirects sent
0 packets sent from this host
0 packets sent with fabricated ip header
0 output packets dropped due to no bufs, etc.
0 output datagrams fragmented
0 fragments created
0 datagrams that can't be fragmented
0 packets that violated scope rules
0 multicast packets which we don't join
0 packets whose headers are not continuous
0 tunneling packets that can't find gif
0 packets discarded due to too may headers
0 failures of source address selection
0 forward cache hit
0 forward cache miss
0 Packets destined to dead next hop
0 option packets dropped due to rate limit
0 Packets dropped (src and int don't match)
0 packets dropped due to bad protocol
0 transit re packet(null) dropped on mgmt i/f
icmp6:
0 Calls to icmp_error
0 Errors not generated because old message was icmp error
```

```
0 Errors not generated because rate limitation
0 Messages with bad code fields
0 Messages < minimum length
0 Bad checksums
0 Messages with bad length
0 No route
0 Administratively prohibited
0 Beyond scope
0 Address unreachable
0 Port unreachable
0 packet too big
0 Time exceed transit
0 Time exceed reassembly
0 Erroneous header field
0 Unrecognized next header
0 Unrecognized option
0 redirect
0 Unknown
0 Message responses generated
0 Messages with too many ND options
pfkey:
0 Requests sent from userland
0 Bytes sent from userland
histogram by message type:
0 reserved
0 dump
0 Messages with invalid length field
0 Messages with invalid version field
0 Messages with invalid message type field
0 Messages too short
0 Messages with memory allocation failure
0 Messages with duplicate extension
0 Messages with invalid extension type
0 Messages with invalid sa type
0 Messages with invalid address extension
0 Requests sent to userland
0 Bytes sent to userland
histogram by message type:
0 reserved
0 dump
0 Messages toward single socket
0 Messages toward all sockets
0 Messages toward registered sockets
0 Messages with memory allocation failure
clnl:
0 Total packets received
0 Packets delivered
0 Too small packets
0 Packets with bad header length
0 Packets with bad checksum
0 Bad version packets
0 Unknown or unsupported protocol packets
0 Packets with bogus sdl size
0 No free memory in socket buffer
0 Send packets discarded
0 Sbappend failure
0 Mcopy failure
0 Address fields were not reasonable
0 Segment information forgotten
0 Forwarded packets
0 Total packets sent
```



```
0 Output packets discarded
0 Non-forwarded packets
0 Packets fragmented
0 Fragments sent
0 Fragments discarded
0 Fragments timed out
0 Fragmentation prohibited
0 Packets reconstructed
0 Packets destined to dead nexthop
0 Packets discarded due to no route
0 Error pdu rate drops
0 ER pdu generation failure
esis:
0 Total pkts received
0 Total packets consumed by protocol
0 Pdus received with bad checksum
0 Pdus received with bad version number
0 Pdus received with bad type field
0 Short pdus received
0 Pdus withbogus sdl size
0 Pdus with bad header length
0 Pdus with unknown or unsupport protocol
0 No free memory in socket buffer
0 Send packets discarded
0 Sbappend failure
0 Mcopy failure
0 ISO family not configured
tnp:
0 Unicast packets received
0 Broadcast packets received
0 Fragmented packets received
0 Hello packets dropped
0 Fragments dropped
0 Fragment reassembly queue flushes
0 Packets with tnp src address collision received
0 Hello packets received
0 Control packets received
0 Rdp packets received
0 Udp packets received
0 Tunnel packets received
0 Input packets discarded with no protocol
0 Packets of version unspecified received
0 Packets of version 1 received
0 Packets of version 2 received
0 Packets of version 3 received
0 Unicast packets sent
0 Broadcast packets sent
0 Fragmented packets sent
0 Hello packets dropped
0 Fragments dropped
0 Hello packets sent
0 Control packets sent
0 Rdp packets sent
0 Udp packets sent
0 Tunnel packets sent
0 Packets sent with unknown protocol
0 Packets of version unspecified sent
0 Packets of version 1 sent
0 Packets of version 2 sent
0 Packets of version 3 sent
rdp:
```

```
0 Input packets
0 Packets discarded for bad checksum
0 Packets discarded due to bad sequence number
0 Refused connections
0 Acks received
0 Packets dropped due to full socket buffers
0 Retransmits
0 Output packets
0 Acks sent
0 Connects
0 Closes
0 Keepalives received
0 Keepalives sent
tudp:
67 Datagrams received
0 Datagrams with incomplete header
0 Datagrams with bad data length field
0 Datagrams with bad checksum
0 Datagrams dropped due to no socket
0 Broadcast/multicast datagrams dropped due to no socket
0 Datagrams dropped due to full socket buffers
67 Delivered
68 Datagrams output
ttp:
0 Packets sent
0 Packets sent while unconnected
0 Packets sent while interface down
0 Packets sent couldn't get buffer
0 Packets sent couldn't find neighbor
0 L2 packets received
0 Unknown L3 packets received
0 IPv4 L3 packets received
0 MPLS L3 packets received
0 MPLS->IPV4 L3 packets received
0 IPv4->MPLS L3 packets received
0 IPv6 L3 packets received
0 ARP L3 packets received
0 CLNP L3 packets received
0 TNP L3 packets received
0 NULL L3 packets received
0 Cyclotron cycle L3 packets received
0 Cyclotron send L3 packets received
0 Packets received while unconnected
0 Packets received from unknown ifl
0 Input packets couldn't get buffer
0 Input packets with bad type
0 Input packets with discard type
0 Input packets with too many tlvs
0 Input packets with bad tlv header
70633 Input packets with bad tlv type
68877 Input packets dropped based on tlv result0 Input packets for which rt lookup
 is bypassed
mpls:
0 Total MPLS packets received
0 Packets forwarded
0 Packets dropped
0 Packets with header too small
0 After tagging, packets can't fit link MTU
0 Packets with IPv4 explicit NULL tag
0 Packets with IPv4 explicit NULL cksum errors
0 Packets with router alert tag
```

```
0 LSP ping packets (ttl-expired/router alert)
0 Packets with ttl expired
0 Packets with tag encoding error
0 Packets discarded due to no route
0 Packets used first nexthop in ecmp unilist
vpls:
0 Total packets received
0 Packets with size smaller than minimum
0 Packets with incorrect version number
0 Packets for this host
0 Packets with no logical interface
0 Packets with no family
0 Packets with no route table
582 Copyright © 2010, Juniper Networks, Inc.
0 Packets with no auxiliary table
0 Packets with no corefacing entry
0 packets with no CE-facing entry
0 MAC route learning requests
0 MAC routes learnt
0 Requests to learn an existing route
0 Learning requests while learning disabled on interface
0 Learning requests over capacity
0 MAC routes moved
0 Requests to move static route
0 MAC route aging requests
0 MAC routes aged
0 Bogus address in aging requests
0 Requests to age static route
0 Requests to re-ageout aged route
0 Requests involving multiple peer FEs
0 Aging acks from PFE
0 Aging non-acks from PFE
0 Aging requests timed out waiting on FEs
0 Aging requests over max-rate
0 Errors finding peer FEs
0 Unsupported platform
0 Packets dropped due to no l3 route table
0 Packets dropped due to no local ifl
0 Packets punted
0 Packets dropped due to no socket
bridge:
Input:
0 packets received
0 packets forwarded
0 packets failed to forward
0 packets dropped
0 packets with vmember lookup failures
0 packets with vlan lookup failures
0 packets with stp state lookup failures
0 packets dropped due to stp blocked/listening
0 packets dropped due to stp learning
0 packets with src MAC learning failures
0 packets with input control processing failures
Forward:
0 packets sent successfully
0 packets with send failures
0 packets forwarded to l3 interface
0 packets with l3 send failures
0 packets discarded
0 packets with l2ifl store failures
0 packets with ifl mismatch failures
```

```
0 packets with packet duplication failures
0 packets with tag lookup failures
0 packets with no route for DMAC
0 packets with no route table
0 packets with no nexthop
0 packets with dead nexthop
0 packets with eof reached error
Learning:
0 MACs learned
0 packets sent to l3 interface
0 packets with l3 send failures
0 packets hit holdq while learning
0 MAC moves
0 packets discarded
0 packets with no route for SMAC
0 packets with no nexthop
0 packets with dead nexthop
0 packets dropped due to no resolve route
0 packets with l3 ifd lookup failures
0 packets with l3 ifl lookup failures
0 packets with l3 invalid rnh
0 packets with no route for SMAC in clone learning
0 packets with no nexhop in clone learning
0 packets with dead nexthop in clone learning
0 packets dropped due to no resolve nh in clone learning
Output:
0 packets forwarded
0 packets failed to forward
0 packets with vmember lookup failures
0 packets with vlan lookup failures
0 packets with input control processing failures
Send:
0 packets sent successfully
0 packets with send failures
0 packets dropped due to interface down
0 packets with dev output failures
0 blocked ifl discards
0 packets with tag lookup failures
0 packets with stp state lookup failures
0 packets with tag insertion failures
0 packets with tag removal failures
Flood:
0 packets flooded
0 flood failures
IGMP:
0 packets sent successfully
0 packets with send failures
0 packets forwarded
0 packets failed to forward
0 packets with mpull failures
0 packets with vmember lookup failures
0 packets with vlan lookup failures
0 packets with ifl lookup failures
0 packets with tag lookup failures
Misc:
0 packets with size smaller than minimum
0 packets with double tags
0 packets with no ifl
0 packets with no family
0 packets with no route table
```

show system storage

Syntax

show system storage
<detail>

Syntax (EX Series Switches)

show system storage
<detail>
<all-members>
<local>
<member *member-id*>

Syntax (TX Matrix Router)

show system storage
<detail>
<all-chassis | all-lcc | lcc *number* | scc>

Syntax (TX Matrix Plus Router)

show system storage
<detail>
<all-chassis | all-lcc | lcc *number* | sfc *number*>

Syntax (MX Series Router)

show system storage
<detail>
<all-members>
<local>
<member *member-id*>

Syntax (QFX Series)

show system storage
<detail>
<infrastructure *name*>
<interconnect-device *name*>
<node-group *name*>

Release Information

Command introduced before Junos OS Release 7.4.
Command introduced in Junos OS Release 9.0 for EX Series switches.
sfc option introduced for the TX Matrix Plus router in JUNOS Release 9.6.
Command introduced in Junos OS Release 11.1 for the QFX Series.

Description

Display statistics about the amount of free disk space in the router's or switch's file systems.

Options

none—Display standard information about the amount of free disk space in the router's or switch's file systems.

detail—(Optional) Display detailed output.

all-chassis—(TX Matrix routers and TX Matrix Plus routers only) (Optional) Display system storage statistics for all the routers in the chassis.

all-lcc—(TX Matrix routers and TX Matrix Plus routers only) (Optional) On a TX Matrix router, display system storage statistics for all T640 routers connected to the TX Matrix router. On a TX Matrix Plus router, display system storage statistics for all routers connected to the TX Matrix Plus router.

all-members—(EX4200 switches and MX Series routers only) (Optional) Display system storage statistics for all members of the Virtual Chassis configuration.

infrastructure ***name***—(QFabric systems only) (Optional) Display system storage statistics for the fabric control Routing Engines or fabric manager Routing Engines.

interconnect-device ***name***—(QFabric systems only) (Optional) Display system storage statistics for the Interconnect device.

lcc ***number***—(TX Matrix routers and TX Matrix Plus routers only) (Optional) On a TX Matrix router, display system storage statistics for a specific T640 router that is connected to the TX Matrix router. On a TX Matrix Plus router, display system storage statistics for a specific router that is connected to the TX Matrix Plus router.

Replace *number* with the following values depending on the LCC configuration:

- 0 through 3, when T640 routers are connected to a TX Matrix router in a routing matrix.
- 0 through 3, when T1600 routers are connected to a TX Matrix Plus router in a routing matrix.
- 0 through 7, when T1600 routers are connected to a TX Matrix Plus router with 3D SIBs in a routing matrix.
- 0, 2, 4, or 6, when T4000 routers are connected to a TX Matrix Plus router with 3D SIBs in a routing matrix.

local—(EX4200 switches and MX Series routers only) (Optional) Display system storage statistics for the local Virtual Chassis member.

member ***member-id***—(EX4200 switches and MX Series routers only) (Optional) Display system storage statistics for the specified member of the Virtual Chassis configuration. For EX4200 switches, replace ***member-id*** with a value from 0 through 9. For an MX Series Virtual Chassis, replace ***member-id*** with a value of 0 or 1.

node-group ***name***—(QFabric systems only) (Optional) Display system storage statistics for the Node group.

scc—(TX Matrix routers only) (Optional) Display system storage statistics for the TX Matrix router (or switch-card chassis).

sfc ***number***—(TX Matrix Plus routers only) (Optional) Display system storage statistics for the TX Matrix Plus router. Replace ***number*** with 0.

Additional Information

By default, when you issue the **show system storage** command on the master Routing Engine of a TX Matrix router or a TX Matrix Plus router, the command is broadcast to all the master Routing Engines of the LCCs connected to it in the routing matrix. Likewise, if you issue the same command on the backup Routing Engine of a TX Matrix or a TX Matrix Plus router, the command is broadcast to all backup Routing Engines of the LCCs that are connected to it in the routing matrix.

Required Privilege Level view

Related Documentation

- *Routing Matrix with a TX Matrix Plus Router Solutions Page*

List of Sample Output

show system storage on page 329
show system storage (TX Matrix Plus Router) on page 329
show system storage (QFX3500 Switch) on page 331

Output Fields Table 12 on page 328 describes the output fields for the **show system storage** command. Output fields are listed in the approximate order in which they appear.

Table 12: show system storage Output Fields

Field Name	Field Description
Filesystem	Name of the filesystem.
Size	Size of the filesystem.
Used	Amount of space used in the filesystem.
Avail	Amount of space available in the filesystem.
Capacity	Percentage of the filesystem space that is being used.
Mounted on	Directory in which the filesystem is mounted.

Sample Output

show system storage

```
user@host> show system storage
Filesystem              Size       Used      Avail  Capacity   Mounted on
/dev/ad0s1a              77M        37M        34M       52%  /
devfs                    16K        16K         0B      100%  /dev/
/dev/vn0                 12M        12M         0B      100%  /packages/mnt/jbase
/dev/vn1                 39M        39M         0B      100%
/packages/mnt/jkernel-7.2R1.7
/dev/vn2                 12M        12M         0B      100%
/packages/mnt/jpfe-M40-7.2R1.7
/dev/vn3                2.3M       2.3M         0B      100%
/packages/mnt/jdocs-7.2R1.7
/dev/vn4                 14M        14M         0B      100%
/packages/mnt/jroute-7.2R1.7
/dev/vn5                4.5M       4.5M         0B      100%
/packages/mnt/jcrypto-7.2R1.7
mfs:172                 1.5G       4.0K       1.3G        0%  /tmp
/dev/ad0s1e              12M        20K        11M        0%  /config
procfs                  4.0K       4.0K         0B      100%  /proc
/dev/ad1s1f             9.4G       4.9G       3.7G       57%  /var
```

show system storage (TX Matrix Plus Router)

```
user@host> show system storage
sfc0-re0:
--------------------------------------------------------------------------
Filesystem              Size       Used      Avail  Capacity   Mounted on
/dev/ad0s1a             3.4G       178M       2.9G        6%  /
devfs                   1.0K       1.0K         0B      100%  /dev
devfs                   1.0K       1.0K         0B      100%  /dev/
/dev/md0                 33M        33M         0B      100%  /packages/mnt/jbase
/dev/md1                216M       216M         0B      100%
/packages/mnt/jkernel-9.6-20090519.0
/dev/md2                 66M        66M         0B      100%
/packages/mnt/jpfe-T-9.6-20090519.0
/dev/md3                4.1M       4.1M         0B      100%
/packages/mnt/jdocs-9.6-20090519.0
/dev/md4                 57M        57M         0B      100%
/packages/mnt/jroute-9.6-20090519.0
/dev/md5                 15M        15M         0B      100%
/packages/mnt/jcrypto-9.6-20090519.0
/dev/md6                 34M        34M         0B      100%
/packages/mnt/jpfe-common-9.6-20090519.0
/dev/md7                2.0G      10.0K       1.8G        0%  /tmp
/dev/md8                2.0G       1.0M       1.8G        0%  /mfs
/dev/ad0s1e             383M        82K       352M        0%  /config
procfs                  4.0K       4.0K         0B      100%  /proc
/dev/ad1s1f              52G       7.5G        40G       16%  /var

lcc0-re0:
--------------------------------------------------------------------------
Filesystem              Size       Used      Avail  Capacity   Mounted on
/dev/ad0s1a             3.4G       178M       2.9G        6%  /
devfs                   1.0K       1.0K         0B      100%  /dev
devfs                   1.0K       1.0K         0B      100%  /dev/
/dev/md0                 33M        33M         0B      100%  /packages/mnt/jbase
/dev/md1                216M       216M         0B      100%
/packages/mnt/jkernel-9.6-20090519.0
/dev/md2                 66M        66M         0B      100%
/packages/mnt/jpfe-T-9.6-20090519.0
```

```
/dev/md3                4.1M       4.1M         0B      100%
/packages/mnt/jdocs-9.6-20090519.0
/dev/md4                 57M        57M         0B      100%
/packages/mnt/jroute-9.6-20090519.0
/dev/md5                 15M        15M         0B      100%
/packages/mnt/jcrypto-9.6-20090519.0
/dev/md6                 34M        34M         0B      100%
/packages/mnt/jpfe-common-9.6-20090519.0
/dev/md7                2.0G      10.0K       1.8G        0%  /tmp
/dev/md8                2.0G       540K       1.8G        0%  /mfs
/dev/ad0s1e             383M        88K       352M        0%  /config
procfs                  4.0K       4.0K         0B      100%  /proc
/dev/ad1s1f              52G       6.3G        41G       13%  /var

lcc1-re0:
--------------------------------------------------------------------------
Filesystem              Size       Used      Avail  Capacity   Mounted on
/dev/ad0s1a             3.4G       178M       2.9G        6%  /
devfs                   1.0K       1.0K         0B      100%  /dev
devfs                   1.0K       1.0K         0B      100%  /dev/
/dev/md0                 33M        33M         0B      100%  /packages/mnt/jbase
/dev/md1                216M       216M         0B      100%
/packages/mnt/jkernel-9.6-20090519.0
/dev/md2                 66M        66M         0B      100%
/packages/mnt/jpfe-T-9.6-20090519.0
/dev/md3                4.1M       4.1M         0B      100%
/packages/mnt/jdocs-9.6-20090519.0
/dev/md4                 57M        57M         0B      100%
/packages/mnt/jroute-9.6-20090519.0
/dev/md5                 15M        15M         0B      100%
/packages/mnt/jcrypto-9.6-20090519.0
/dev/md6                 34M        34M         0B      100%
/packages/mnt/jpfe-common-9.6-20090519.0
/dev/md7                2.0G      10.0K       1.8G        0%  /tmp
/dev/md8                2.0G       540K       1.8G        0%  /mfs
/dev/ad0s1e             383M        88K       352M        0%  /config
procfs                  4.0K       4.0K         0B      100%  /proc
/dev/ad1s1f              23G        13G       7.7G       64%  /var

lcc2-re0:
--------------------------------------------------------------------------
Filesystem              Size       Used      Avail  Capacity   Mounted on
/dev/ad0s1a             3.4G       178M       2.9G        6%  /
devfs                   1.0K       1.0K         0B      100%  /dev
devfs                   1.0K       1.0K         0B      100%  /dev/
/dev/md0                 33M        33M         0B      100%  /packages/mnt/jbase
/dev/md1                216M       216M         0B      100%
/packages/mnt/jkernel-9.6-20090519.0
/dev/md2                 66M        66M         0B      100%
/packages/mnt/jpfe-T-9.6-20090519.0
/dev/md3                4.1M       4.1M         0B      100%
/packages/mnt/jdocs-9.6-20090519.0
/dev/md4                 57M        57M         0B      100%
/packages/mnt/jroute-9.6-20090519.0
/dev/md5                 15M        15M         0B      100%
/packages/mnt/jcrypto-9.6-20090519.0
/dev/md6                 34M        34M         0B      100%
/packages/mnt/jpfe-common-9.6-20090519.0
/dev/md7                2.0G      10.0K       1.8G        0%  /tmp
/dev/md8                2.0G       540K       1.8G        0%  /mfs
/dev/ad0s1e             383M        64K       352M        0%  /config
```

```
procfs                  4.0K       4.0K         0B      100%  /proc
/dev/ad1s1f              23G       3.7G        17G       18%  /var

lcc3-re0:
--------------------------------------------------------------------------
Filesystem              Size       Used      Avail  Capacity   Mounted on
/dev/ad0s1a             3.4G       178M       2.9G        6%  /
devfs                   1.0K       1.0K         0B      100%  /dev
devfs                   1.0K       1.0K         0B      100%  /dev/
/dev/md0                 33M        33M         0B      100%  /packages/mnt/jbase
/dev/md1                216M       216M         0B      100%
/packages/mnt/jkernel-9.6-20090519.0
/dev/md2                 66M        66M         0B      100%
/packages/mnt/jpfe-T-9.6-20090519.0
/dev/md3                4.1M       4.1M         0B      100%
/packages/mnt/jdocs-9.6-20090519.0
/dev/md4                 57M        57M         0B      100%
/packages/mnt/jroute-9.6-20090519.0
/dev/md5                 15M        15M         0B      100%
/packages/mnt/jcrypto-9.6-20090519.0
/dev/md6                 34M        34M         0B      100%
/packages/mnt/jpfe-common-9.6-20090519.0
/dev/md7                2.0G      10.0K       1.8G        0%  /tmp
/dev/md8                2.0G       540K       1.8G        0%  /mfs
/dev/ad0s1e             383M        34K       352M        0%  /config
procfs                  4.0K       4.0K         0B      100%  /proc
/dev/ad1s1f              23G        18G       3.5G       84%  /var
```

show system storage (QFX3500 Switch)

```
user@switch> show system storage
Filesystem              Size       Used      Avail  Capacity   Mounted on
/dev/da0s2a             343M       192M       123M       61%  /
devfs                   1.0K       1.0K         0B      100%  /dev
/dev/md0                119M       119M         0B      100%  /packages/mnt/jbase
/dev/md1                513M       513M         0B      100%
/packages/mnt/jkernel-qfx-11.1R1.5
/dev/md2                 37M        37M         0B      100%
/packages/mnt/jpfe-qfx-e9xxx-11.1R1.5
/dev/md3                6.0M       6.0M         0B      100%
/packages/mnt/jdocs-qfx-11.1R1.5
/dev/md4                216M       216M         0B      100%
/packages/mnt/jroute-qfx-11.1R1.5
/dev/md5                 59M        59M         0B      100%
/packages/mnt/jcrypto-qfx-11.1R1,5
/dev/md6                 85M        85M         0B      100%
/packages/mnt/jswitch-qfx-11.1R1.5
/dev/md7                 63M       8.0K        58M        0%  /tmp
/dev/da0s2f             228M        14M       196M        7%  /var
/dev/da0s3d             590M       3.0M       540M        1%  /var/tmp
/dev/da0s3e             104M       162K        95M        0%  /config
procfs                  4.0K       4.0K         0B      100%  /proc
```

show system switchover

Syntax

show system switchover

Syntax (TX Matrix Router)

show system switchover
<all-chassis | all-lcc | lcc *number* | scc>

Syntax (TX Matrix Plus Router)

show system switchover
<all-chassis | all-lcc | lcc *number* | sfc *number*>

Syntax (MX Series Router)

show system switchover
<all-members>
<local>
<member *member-id*>

Release Information

Command introduced before Junos OS Release 7.4.
Command introduced in Junos OS Release 9.0 for EX Series switches.
sfc option introduced for the TX Matrix Plus router in Junos OS Release 9.6.

Description

Display whether graceful Routing Engine switchover is configured, the state of the kernel replication (ready or synchronizing), any replication errors, and whether the primary and standby Routing Engines are using compatible versions of the kernel database.

NOTE: Issue the **show system switchover** command *only* on the backup Routing Engine. This command is *not* supported on the master Routing Engine. because the **kernel-replication** process daemon does not run on the master Routing Engine. This process runs only on the backup Routing Engine.

Beginning Junos OS Release 9.6, the **show system switchover** command has been deprecated on the master Routing Engine on all routers other than a TX Matrix (switch-card chassis) or a TX Matrix Plus (switch-fabric chassis) router.

However, in a routing matrix, if you issue the **show system switchover** command on the master Routing Engine of the TX Matrix router (or switch-card chassis), the CLI displays graceful switchover information for the master Routing Engine of the T640 routers (or line-card chassis) in the routing matrix. Likewise, if you issue the **show system switchover** command on the master Routing Engine of a TX Matrix Plus router (or switch-fabric chassis), the CLI displays output for the master Routing Engine of T1600 or T4000 routers in the routing matrix.

Options

all-chassis—(TX Matrix routers and TX Matrix Plus routers only) (Optional) On a TX Matrix router, display graceful Routing Engine switchover information for all Routing Engines on the TX Matrix router and the T640 routers configured in the routing matrix. On a TX Matrix Plus router, display graceful Routing Engine switchover information for all

Routing Engines on the TX Matrix Plus router and the T1600 or T4000 routers configured in the routing matrix.

all-lcc—(TX Matrix routers and TX Matrix Plus routers only) (Optional) On a TX Matrix router, display graceful Routing Engine switchover information for all T640 routers (or line-card chassis) connected to the TX Matrix router. On a TX Matrix Plus router, display graceful Routing Engine switchover information for all connected T1600 or T4000 LCCs.

Note that in this instance, packets get dropped. The LCCs perform GRES on their own chassis (GRES cannot be handled by one particular chassis for the entire router) and synchronization is not possible as the LCC plane bringup time varies for each LCC. Therefore, when there is traffic on these planes, there may be a traffic drop.

all-members—(MX Series routers only) (Optional) Display graceful Routing Engine switchover information for all Routing Engines on all members of the Virtual Chassis configuration.

lcc ***number***—(TX Matrix routers and TX Matrix Plus routers only) (Optional) On a TX Matrix router, display graceful Routing Engine switchover information for a specific T640 router connected to the TX Matrix router. On a TX Matrix Plus router, display graceful Routing Engine switchover information for a specific router connected to the TX Matrix Plus router.

Replace *number* with the following values depending on the LCC configuration:

- 0 through 3, when T640 routers are connected to a TX Matrix router in a routing matrix.
- 0 through 3, when T1600 routers are connected to a TX Matrix Plus router in a routing matrix.
- 0 through 7, when T1600 routers are connected to a TX Matrix Plus router with 3D SIBs in a routing matrix.
- 0, 2, 4, or 6, when T4000 routers are connected to a TX Matrix Plus router with 3D SIBs in a routing matrix.

local—(MX Series routers only) (Optional) Display graceful Routing Engines switchover information for all Routing Engines on the local Virtual Chassis member.

member ***member-id***—(MX Series routers only) (Optional) Display graceful Routing Engine switchover information for all Routing Engines on the specified member of the Virtual Chassis configuration. Replace ***member-id*** with a value of 0 or 1.

scc—(TX Matrix router only) (Optional) Display graceful Routing Engine switchover information for the TX Matrix router (or switch-card chassis).

sfc—(TX Matrix Plus routers only) (Optional) Display graceful Routing Engine switchover information for the TX Matrix Plus router.

Additional Information

If you issue the **show system switchover** command on a TX Matrix backup Routing Engine, the command is broadcast to all the T640 backup Routing Engines that are connected to it.

Likewise, if you issue the **show system switchover** command on a TX Matrix Plus backup Routing Engine, the command is broadcast to all the T1600 or T4000 backup Routing Engines that are connected to it.

If you issue the **show system switchover** command on the active Routing Engine in the master router of an MX Series Virtual Chassis, the router displays an error message that graceful Routing Engine switchover (GRES) is not enabled on this member.

Required Privilege Level view

Related Documentation
- *Routing Matrix with a TX Matrix Plus Router Solutions Page*

List of Sample Output
show system switchover (Backup Routing Engine) on page 335
show system switchover all-lcc (Routing Matrix) on page 335

Output Fields Table 13 on page 334 describes the output fields for the **show system switchover** command. Output fields are listed in the approximate order in which they appear.

Table 13: show system switchover Output Fields

Field Name	Field Description
Graceful switchover	Display graceful Routing Engine switchover status: • **On**—Indicates **graceful-switchover** is specified for the **routing-options** configuration command. • **Off**—Indicates **graceful-switchover** is not specified for the **routing-options** configuration command.
Configuration database	State of the configuration database: • **Ready**—Configuration database has synchronized. • **Synchronizing**—Configuration database is synchronizing. Displayed when there are updates within the last 5 seconds. • **Synchronize failed**—Configuration database synchronize process failed.
Kernel database	State of the kernel database: • **Ready**—Kernel database has synchronized. • **Synchronizing**—Kernel database is synchronizing. Displayed when there are updates within the last 5 seconds. • **Version incompatible**—The primary and standby Routing Engines are running incompatible kernel database versions. • **Replication error**—An error occurred when the state was replicated from the primary Routing Engine. Inspect **Steady State** for possible causes, or notify Juniper Networks customer support.
Peer state	Routing Engine peer state: • **Steady State**—Peer completed switchover transition. • **Peer Connected**—Peer in switchover transition.

Sample Output

show system switchover (Backup Routing Engine)

```
user@host> show system switchover
Graceful switchover: On
Configuration database: Ready
Kernel database: Ready
Peer state: Steady State
```

show system switchover all-lcc (Routing Matrix)

```
user@host> show system switchover all-lcc

lcc0-re0:
--------------------------------------------------------------------------
Multichassis replication: On
Configuration database: Ready
Kernel database: Ready
Peer state: Steady State
lcc2-re0:
--------------------------------------------------------------------------
Multichassis replication: On
Configuration database: Ready
Kernel database: Ready
Peer state: Steady State
```

show system uptime

Syntax

show system uptime

Syntax (EX Series Switches)

show system uptime
<all-members>
<local>
<member *member-id*>

Syntax (QFX Series)

show system uptime
<director-group *name*>
<infrastructure *name*>
<interconnect-device *name*>
<node-group *name*>

Syntax (TX Matrix Router)

show system uptime
<all-chassis | all-lcc | lcc *number* | scc>

Syntax (TX Matrix Plus Router)

show system uptime
<detail>
<all-chassis | all-lcc | lcc *number* | sfc *number*>

Syntax (MX Series Router)

show system uptime
<all-members>
<invoke-on>
<local>
<member *member-id*>

Release Information

Command introduced before Junos OS Release 7.4.
Command introduced in Junos OS Release 9.0 for EX Series switches.
sfc option introduced for the TX Matrix Plus router in JUNOS Release 9.6.
Command introduced in Junos OS Release 11.1 for the QFX Series.

Description

Display the current time and information about how long the router or switch, router or switch software, and routing protocols have been running.

Options

none—Show time since the system rebooted and processes started.

all-chassis—(TX Matrix routers and TX Matrix Plus routers only) (Optional) Show time since the system rebooted and processes started on all the routers in the chassis.

all-lcc—(TX Matrix routers and TX Matrix Plus routers only) (Optional) On a TX Matrix router, show time since the system rebooted and processes started for all T640 routers (or line-card chassis) connected to the TX Matrix router. On a TX Matrix Plus router, show time since the system rebooted and processes started for all connected T1600 or T4000 LCCs.

all-members—(EX4200 switches and MX Series routers only) (Optional) Show time since the system rebooted and processes started on all members of the Virtual Chassis configuration.

director-group ***name***—(QFabric systems only) (Optional) Show time since the system rebooted and processes started on the Director group.

infrastructure ***name***—(QFabric systems only) (Optional) Show time since the system rebooted and processes started on the fabric control Routing Engine and fabric manager Routing Engine.

interconnect-device ***name***—(QFabric systems only) (Optional) Show time since the system rebooted and processes started on the Interconnect device.

invoke-on—(MX Series routers only) (Optional) Display the time since the system rebooted and processes started on the master Routing Engine, backup Routing Engine, or both, on a router with two Routing Engines.

lcc ***number***—(TX Matrix routers and TX Matrix Plus routers only) (Optional) On a TX Matrix router, show time since the system rebooted and processes started for a specific T640 router that is connected to the TX Matrix router. On a TX Matrix Plus router, show time since the system rebooted and processes started for a specific router that is connected to the TX Matrix Plus router.

Replace *number* with the following values depending on the LCC configuration:

- 0 through 3, when T640 routers are connected to a TX Matrix router in a routing matrix.
- 0 through 3, when T1600 routers are connected to a TX Matrix Plus router in a routing matrix.
- 0 through 7, when T1600 routers are connected to a TX Matrix Plus router with 3D SIBs in a routing matrix.
- 0, 2, 4, or 6, when T4000 routers are connected to a TX Matrix Plus router with 3D SIBs in a routing matrix.

local—(EX4200 switches and MX Series routers only) (Optional) Show time since the system rebooted and processes started on the local Virtual Chassis member.

member ***member-id***—(EX4200 switches and MX Series routers only) (Optional) Show time since the system rebooted and processes started on the specified member of the Virtual Chassis configuration. For EX4200 switches, replace ***member-id*** with a value from 0 through 9. For an MX Series Virtual Chassis, replace ***member-id*** with a value of 0 or 1.

node-group ***name***—(QFabric systems only) (Optional) Show time since the system rebooted and processes started on the Node group.

scc—(TX Matrix routers only) (Optional) Show time since the system rebooted and processes started for the TX Matrix router (or switch-card chassis).

sfc ***number***—(TX Matrix Plus routers only) (Optional) Show time since the system rebooted and processes started for the TX Matrix Plus router. Replace *number* with 0.

Additional Information

By default, when you issue the **show system uptime** command on the master Routing Engine of a TX Matrix router or a TX Matrix Plus router, the command is broadcast to all the master Routing Engines of the LCCs connected to it in the routing matrix. Likewise, if you issue the same command on the backup Routing Engine of a TX Matrix or a TX Matrix Plus router, the command is broadcast to all backup Routing Engines of the LCCs that are connected to it in the routing matrix.

Required Privilege Level

view

Related Documentation

- Monitoring System Process Information
- Monitoring System Properties
- 10-Gigabit Ethernet LAN/WAN PIC with XFP (T640 Router)
- *Routing Matrix with a TX Matrix Plus Router Solutions Page*

List of Sample Output

show system uptime on page 339
show system uptime all-lcc (TX Matrix Router) on page 339
show system uptime all-lcc (TX Matrix Plus Router) on page 339
show system uptime (QFX Series) on page 340

Output Fields

Table 14 on page 338 describes the output fields for the **show system uptime** command. Output fields are listed in the approximate order in which they appear.

Table 14: show system uptime Output Fields

Field Name	Field Description
Current time	Current system time in UTC.
System booted	Date and time when the Routing Engine on the router or switch was last booted and how long it has been running.
Protocols started	Date and time when the routing protocols were last started and how long they have been running.
Last configured	Date and time when a configuration was last committed. Also shows the name of the user who issued the last **commit** command.
***time* and up**	Current time, in the local time zone, and how long the router or switch has been operational.
users	Number of users logged in to the router or switch.
load averages	Load averages for the last 1 minute, 5 minutes, and 15 minutes.

Sample Output

show system uptime

```
user@host> show system uptime
Current time:      1998-10-13 19:45:47 UTC
System booted:     1998-10-12 20:51:41 UTC (22:54:06 ago)
Protocols started: 1998-10-13 19:33:45 UTC (00:12:02 ago)
Last configured:   1998-10-13 19:33:45 UTC (00:12:02 ago) by abc
12:45PM  up 22:54, 2 users, load averages: 0.07, 0.02, 0.01
```

show system uptime all-lcc (TX Matrix Router)

```
user@host> show system uptime all-lcc
lcc0-re0:
--------------------------------------------------------------------------
Current time: 2004-09-13 09:55:35 PDT
System booted: 2004-09-13 03:13:55 PDT (06:41:40 ago)
Last configured: 2004-09-13 03:17:48 PDT (06:37:47 ago) by root
9:55AM PDT up 6:42, 1 user, load averages: 0.02, 0.03, 0.00
lcc2-re0:
--------------------------------------------------------------------------
Current time: 2004-09-13 09:55:35 PDT
System booted: 2004-09-12 03:23:43 PDT (1d 06:31 ago)
Last configured: 2004-09-13 03:05:36 PDT (06:49:59 ago) by root
9:55AM PDT up 1 day,  6:32, 1 user, load averages: 0.02, 0.01, 0.00
```

show system uptime all-lcc (TX Matrix Plus Router)

```
user@host> show system uptime all-lcc
sfc0-re0:
--------------------------------------------------------------------------
Current time: 2009-05-25 00:24:30 PDT
System booted: 2009-05-24 06:39:33 PDT (17:44:57 ago)
Protocols started: 2009-05-24 06:40:30 PDT (17:44:00 ago)
Last configured: 2009-05-24 06:33:27 PDT (17:51:03 ago) by gregdo
12:24AM  up 17:45, 2 users, load averages: 0.07, 0.05, 0.01

lcc0-re0:
--------------------------------------------------------------------------
Current time: 2009-05-25 00:24:30 PDT
System booted: 2009-05-24 06:39:46 PDT (17:44:44 ago)
error: the routing subsystem is not running
Last configured: 2009-05-24 06:40:47 PDT (17:43:43 ago) by root
12:24AM  up 17:45, 0 users, load averages: 0.00, 0.00, 0.00

lcc1-re0:
--------------------------------------------------------------------------
Current time: 2009-05-25 00:24:30 PDT
System booted: 2009-05-24 06:39:38 PDT (17:44:52 ago)
error: the routing subsystem is not running
Last configured: 2009-05-24 06:40:18 PDT (17:44:12 ago) by root
12:24AM  up 17:45, 0 users, load averages: 0.00, 0.00, 0.00

lcc2-re0:
--------------------------------------------------------------------------
Current time: 2009-05-25 00:24:30 PDT
System booted: 2009-05-24 06:39:48 PDT (17:44:42 ago)
error: the routing subsystem is not running
Last configured: 2009-05-24 06:40:44 PDT (17:43:46 ago) by root
12:24AM  up 17:45, 0 users, load averages: 0.00, 0.00, 0.00

lcc3-re0:
--------------------------------------------------------------------------
```

```
Current time: 2009-05-25 00:24:30 PDT
System booted: 2009-05-24 06:39:44 PDT (17:44:46 ago)
error: the routing subsystem is not running
Last configured: 2009-05-24 06:40:08 PDT (17:44:22 ago) by root
12:24AM  up 17:45, 0 users, load averages: 0.00, 0.00, 0.00
```

show system uptime (QFX Series)

```
user@switch> show system uptime
Current time: 2010-08-27 03:12:30 PDT
System booted: 2010-08-13 17:11:54 PDT (1w6d 10:00 ago)
Protocols started: 2010-08-13 17:13:56 PDT (1w6d 09:58 ago)
Last configured: 2010-08-26 05:54:00 PDT (21:18:30 ago) by regress
 3:12AM  up 13 days, 10:01, 3 users, load averages: 0.00, 0.00, 0.00
```

show system virtual-memory

Syntax

show system virtual-memory

Syntax (EX Series)

show system virtual-memory
<all-members>
<local>
<member *member-id*>

Syntax (TX Matrix Router)

show system virtual-memory
<all-chassis | all-lcc | lcc *number* | scc>

Syntax (TX Matrix Plus Router)

show system virtual-memory
<all-chassis | all-lcc | lcc *number* | sfc *number*>

Syntax (MX Series Router)

show system virtual-memory
<all-members>
<local>
<member *member-id*>

Syntax (QFX Series)

show system virtual-memory
<infrastructure *name*>
<interconnect-device *name*>
<node-group *name*>

Release Information

Command introduced before Junos OS Release 7.4.
Command introduced in Junos OS Release 9.0 for EX Series switches.
sfc option introduced for the TX Matrix Plus router in Junos OS Release 9.6.
Command introduced in Junos OS Release 11.1 for the QFX Series.

Description

Display the usage of Junos OS kernel memory listed first by size of allocation and then by type of usage. Use the **show system virtual-memory** command for troubleshooting with Juniper Networks Customer Support.

Options

none—Display kernel dynamic memory usage information.

all-chassis—(TX Matrix routers and TX Matrix Plus routers only) (Optional) Display kernel dynamic memory usage information for all chassis.

all-lcc—(TX Matrix routers and TX Matrix Plus routers only) (Optional) On a TX Matrix router, display kernel dynamic memory usage information for all T640 routers connected to the TX Matrix router. On a TX Matrix Plus router, display kernel dynamic memory usage information for all connected T1600 or T4000 LCCs.

all-members—(EX4200 switches and MX Series routers only) (Optional) Display kernel dynamic memory usage information for all members of the Virtual Chassis configuration.

infrastructure *name*—(QFabric systems only) (Optional) Display kernel dynamic memory usage information for the fabric control Routing Engine and fabric manager Routing Engine.

interconnect-device ***name***—(QFabric systems only) (Optional) Display kernel dynamic memory usage information for the Interconnect device.

lcc ***number***—(TX Matrix routers and TX Matrix Plus routers only) (Optional) On a TX Matrix router, display kernel dynamic memory usage information for a specific T640 router that is connected to the TX Matrix router. On a TX Matrix Plus router, display kernel dynamic memory usage information for a specific router that is connected to the TX Matrix Plus router.

Replace *number* with the following values depending on the LCC configuration:

- 0 through 3, when T640 routers are connected to a TX Matrix router in a routing matrix.
- 0 through 3, when T1600 routers are connected to a TX Matrix Plus router in a routing matrix.
- 0 through 7, when T1600 routers are connected to a TX Matrix Plus router with 3D SIBs in a routing matrix.
- 0, 2, 4, or 6, when T4000 routers are connected to a TX Matrix Plus router with 3D SIBs in a routing matrix.

local—(EX4200 switches and MX Series routers only) (Optional) Display kernel dynamic memory usage information for the local Virtual Chassis member.

member ***member-id***—(EX4200 switches and MX Series routers only) (Optional) Display kernel dynamic memory usage information for the specified member of the Virtual Chassis configuration. For EX4200 switches, replace ***member-id*** with a value from 0 through 9. For an MX Series Virtual Chassis, replace ***member-id*** with a value of 0 or 1.

node-group ***name***—(QFabric systems only) (Optional) Display kernel dynamic memory usage information for the Node group.

scc—(TX Matrix routers only) (Optional) Display kernel dynamic memory usage information for the TX Matrix router (or switch-card chassis).

sfc ***number***—(TX Matrix Plus routers only) (Optional) Display kernel dynamic memory usage information for the TX Matrix Plus router. Replace ***number*** with 0.

Additional Information

By default, when you issue the **show system virtual-memory** command on the master Routing Engine of a TX Matrix router or a TX Matrix Plus router, the command is broadcast to all the master Routing Engines of the LCCs connected to it in the routing matrix. Likewise, if you issue the same command on the backup Routing Engine of a TX Matrix or a TX Matrix Plus router, the command is broadcast to all backup Routing Engines of the LCCs that are connected to it in the routing matrix.

NOTE: The **show system virtual-memory** command with the **| display XML** pipe option now displays XML output for the command in the parent tags: **<vmstat-memstat-malloc>**, **<vmstat-memstat-zone>**, **<vmstat-sumstat>**, **<vmstat-intr>**, and **<vmstat-kernel-state>** with each child element as a separate XML tag. In Junos OS Releases 10.1 and earlier, the **| display XML** option for this command does not have an XML API element and the entire output is displayed in a single **<output>** tag element.

Required Privilege Level

view

Related Documentation

- *Routing Matrix with a TX Matrix Plus Router Solutions Page*

List of Sample Output

show system virtual-memory on page 346
show system virtual-memory scc (TX Matrix Router) on page 350
show system virtual-memory sfc (TX Matrix Plus Router) on page 350
show system virtual-memory | display xml on page 354
show system virtual-memory (QFX Series) on page 376

Output Fields

Table 15 on page 344 lists the output fields for the **show system virtual-memory** command. Output fields are listed in the approximate order in which they appear.

Table 15: show system virtual-memory Output Fields

Field Name	Field Description
Memory statistics by bucket size	
Size	Memory block size (bytes). The kernel memory allocator appropriates blocks of memory whose size is exactly a power of 2.
In Use	Number of memory blocks of this size that are in use (bytes).
Free	Number of memory blocks of this size that are free (bytes).
Requests	Number of memory allocation requests made.
HighWater	Maximum value the free list can have. Once the system starts reclaiming physical memory, it continues until the free list is increased to this value.
Couldfree	Total number of times that the free elements for a bucket size exceed the high-water mark for that bucket size.
Memory usage type by bucket size	
Size	Memory block size (bytes).
Type(s)	Kernel modules that are using these memory blocks. For a definition of each type, refer to a FreeBSD book.
Memory statistics by type	
Type	Kernel module that is using dynamic memory.
InUse	Number of memory blocks used by this type. The number is rounded up.
MemUse	Amount of memory in use, in kilobytes (KB).
HighUse	Maximum memory ever used by this type.
Limit	Maximum memory that can be allocated to this type.
Requests	Total number of dynamic memory allocation requests this type has made.
Type Limit	Number of times requests were blocked for reaching the maximum limit.
Kern Limit	Number of times requests were blocked for the kernel map.
Size(s)	Memory block sizes this type is using.
Memory Totals	
In Use	Total kernel dynamic memory in use (bytes, rounded up).
Free	Total kernel dynamic memory free (bytes, rounded up).

Table 15: show system virtual-memory Output Fields *(continued)*

Field Name	Field Description
Requests	Total number of memory allocation requests.
ITEM	Kernel module that is using memory.
Size	Memory block size (bytes).
LImit	Maximum memory that can be allocated to this type.
Used	Number of memory blocks used by this type. The number is rounded up.
Free	Number of memory blocks available to this type.
Requests	Total number of memory allocation requests this type has made.
interrupt	Timer events and scheduling interruptions.
total	Total number of interruptions for each type.
rate	Interruption rate.
Total	Total for all interruptions.

Sample Output

show system virtual-memory

```
user@host> show system virtual-memory
Memory statistics by bucket size
Size   In Use   Free   Requests  HighWater  Couldfree
  16      906    118     154876    1280          0
  32      455    313     209956     640          0
  64     4412    260      75380     320         20
 128     3200     32      19361     160         81
 256     1510     10       8844      80          4
 512      446      2       5085      40          0
  1K       18      2       5901      20          0
  2K     1128      2       4445      10       1368
  4K      185      1        456       5          0
  8K        5      1       2653       5          0
 16K      181      0        233       5          0
 32K        2      0       1848       5          0
 64K       20      0         22       5          0
128K        5      0          5       5          0
256K        2      0          2       5          0
512K        1      0          1       5          0

Memory usage type by bucket size
Size  Type(s)
  16  uc_devlist, nexusdev, iftable, temp, devbuf, atexit, COS, BPF,
          DEVFS mount, DEVFS node, vnodes, mount, pcb, soname, proc-args, kld,
          MD disk, rman, ATA generic, bus, sysctl, ippool, pfestat, ifstate,
          pfe_ipc, mkey, rtable, ifmaddr, ipfw, rnode
  32  atkbddev, dirrem, mkdir, diradd, freefile, freefrag, indirdep,
          bmsafemap, newblk, temp, devbuf, COS, vnodes, cluster_save buffer,
          pcb, soname, proc-args, sigio, kld, Gzip trees, taskqueue, SWAP,
          eventhandler, bus, sysctl, uidinfo, subproc, pgrp, pfestat, itable32,
          ifstate, pfe_ipc, mkey, rtable, ifmaddr, ipfw, rnode, rtnexthop
  64  isadev, iftable, MFS node, allocindir, allocdirect, pagedep, temp,
          devbuf, lockf, COS, NULLFS hash, DEVFS name, vnodes,
          cluster_save buffer, vfscache, pcb, soname, proc-args, file,
          AR driver, AD driver, Gzip trees, rman, eventhandler, bus, sysctl,
          subproc, pfestat, pic, ifstate, pfe_ipc, mkey, ifaddr, rtable, ipfw
 128  ZONE, freeblks, inodedep, temp, devbuf, zombie, COS, DEVFS node,
          vnodes, mount, vfscache, pcb, soname, proc-args, ttys, dev_t,
          timecounter, kld, Gzip trees, ISOFS node, bus, uidinfo, cred,
          session, pic, itable16, ifstate, pfe_ipc, rtable, ifstat, metrics,
          rtnexthop, iffamily
 256  iflogical, iftable, MFS node, FFS node, newblk, temp, devbuf,
          NFS daemon, vnodes, proc-args, kqueue, file desc, Gzip trees, bus,
          subproc, itable16, ifstate, pfe_ipc, sysctl, rtnexthop
 512  UFS mount, temp, devbuf, mount, BIO buffer, ptys, ttys, AR driver,
          Gzip trees, ISOFS mount, msg, ioctlops, ATA generic, bus, proc,
          pfestat, lr, ifstate, pfe_ipc, rtable, ipfw, ifstat, rtnexthop
  1K  iftable, temp, devbuf, NQNFS Lease, kqueue, kld, AD driver,
          Gzip trees, sem, MD disk, bus, ifstate, pfe_ipc, ipfw
  2K  uc_devlist, UFS mount, temp, devbuf, BIO buffer, pcb, AR driver,
          Gzip trees, ioctlops, bus, ipfw, ifstat, rcache
  4K  memdesc, iftable, UFS mount, temp, devbuf, kld, Gzip trees, sem, msg
  8K  temp, devbuf, syncache, Gzip trees
 16K  indirdep, temp, devbuf, shm, msg
 32K  pagedep, kld, Gzip trees
 64K  VM pgdata, devbuf, MSDOSFS mount
128K  UFS ihash, inodedep, NFS hash, kld, ISOFS mount
256K  mbuf, vfscache
```

```
512K  SWAP

Memory statistics by type                          Type  Kern
        Type  InUse MemUse HighUse  Limit Requests Limit Limit Size(s)
       isadev    13     1K      1K127753K       13    0     0  64
     atkbddev     2     1K      1K127753K        2    0     0  32
   uc_devlist    24     3K      3K127753K       24    0     0  16,2K
     nexusdev     3     1K      1K127753K        3    0     0  16
      memdesc     1     4K      4K127753K        1    0     0  4K
         mbuf     1   152K    152K127753K        1    0     0  256K
    iflogical     6     2K      2K127753K        6    0     0  256
      iftable    17     9K      9K127753K       18    0     0  16,64,256,1K,4K
         ZONE    15     2K      2K127753K       15    0     0  128
    VM pgdata     1    64K     64K127753K        1    0     0  64K
    UFS mount    12    26K     26K127753K       12    0     0  512,2K,4K
    UFS ihash     1   128K    128K127753K        1    0     0  128K
     MFS node     6     2K      3K127753K       35    0     0  64,256
     FFS node   906   227K    227K127753K     1352    0     0  256
       dirrem     0     0K      4K127753K      500    0     0  32
        mkdir     0     0K      1K127753K       38    0     0  32
       diradd     0     0K      6K127753K      521    0     0  32
     freefile     0     0K      4K127753K      374    0     0  32
     freeblks     0     0K      8K127753K      219    0     0  128
     freefrag     0     0K      1K127753K      193    0     0  32
   allocindir     0     0K     25K127753K     1518    0     0  64
     indirdep     0     0K     17K127753K       76    0     0  32,16K
  allocdirect     0     0K     10K127753K      760    0     0  64
    bmsafemap     0     0K      1K127753K       72    0     0  32
       newblk     1     1K      1K127753K     2279    0     0  32,256
     inodedep     1   128K    175K127753K     2367    0     0  128,128K
      pagedep     1    32K     33K127753K       47    0     0  64,32K
         temp  1239    92K     96K127753K     8364    0     0  16,32,64K
       devbuf  1413  5527K   5527K127753K     1535    0     0  16,32,64,128,256
        lockf    38     3K      3K127753K     2906    0     0  64
       atexit     1     1K      1K127753K        1    0     0  16
       zombie     0     0K      2K127753K     3850    0     0  128
     NFS hash     1   128K    128K127753K        1    0     0  128K
  NQNFS Lease     1     1K      1K127753K        1    0     0  1K
   NFS daemon     1     1K      1K127753K        1    0     0  256
     syncache     1     8K      8K127753K        1    0     0  8K
          COS   353    44K     44K127753K      353    0     0  16,32,64,128
          BPF   189     3K      3K127753K      189    0     0  16
MSDOSFS mount     1    64K     64K127753K        1    0     0  64K
  NULLFS hash     1     1K      1K127753K        1    0     0  64
  DEVFS mount     2     1K      1K127753K        2    0     0  16
   DEVFS name   487    31K     31K127753K      487    0     0  64
   DEVFS node   471    58K     58K127753K      479    0     0  16,128
       vnodes    28     7K      7K127753K      429    0     0  16,32,64,128,256
        mount    15     8K      8K127753K       18    0     0  16,128,512
cluster_save buffer     0     0K      1K127753K       55    0     0  32,64
     vfscache  1898   376K    376K127753K     3228    0     0  64,128,256K
   BIO buffer    49    98K    398K127753K      495    0     0  512,2K
          pcb   159    16K     17K127753K      399    0     0  16,32,64,128,2K
       soname    82    10K     10K127753K    42847    0     0  16,32,64,128
    proc-args    57     2K      3K127753K     2105    0     0  16,32,64,128,256
         ptys    32    16K     16K127753K       32    0     0  512
         ttys   254    33K     33K127753K      522    0     0  128,512
       kqueue     5     3K      4K127753K       23    0     0  256,1K
        sigio     1     1K      1K127753K       27    0     0  32
         file   383    24K     24K127753K    16060    0     0  64
    file desc    76    19K     20K127753K     3968    0     0  256
```

```
            shm     1    12K     12K127753K        1    0     0  16K
          dev_t   286    36K     36K127753K      286    0     0  128
    timecounter    10     2K      2K127753K       10    0     0  128
            kld    11   117K    122K127753K       34    0     0  16,32,128,1K,4K
      AR driver     1     1K      3K127753K        5    0     0  64,512,2K
      AD driver     2     2K      3K127753K     2755    0     0  64,1K
     Gzip trees     0     0K     46K127753K   133848    0     0  32,64,128,256
     ISOFS node  1136   142K    142K127753K     1189    0     0  128
    ISOFS mount     9   132K    132K127753K       10    0     0  512,128K
            sem     3     6K      6K127753K        3    0     0  1K,4K
        MD disk     2     2K      2K127753K        2    0     0  16,1K
            msg     4    25K     25K127753K        4    0     0  512,4K,16K
           rman    59     4K      4K127753K      461    0     0  16,64
       ioctlops     0     0K      2K127753K      992    0     0  512,2K
      taskqueue     2     1K      1K127753K        2    0     0  32
           SWAP     2   413K    413K127753K        2    0     0  32,512K
    ATA generic     6     3K      3K127753K        6    0     0  16,512
   eventhandler    17     1K      1K127753K       17    0     0  32,64
            bus   340    30K     31K127753K      794    0     0  16,32,64,128,256
         sysctl     0     0K      1K127753K   130262    0     0  16,32,64
        uidinfo     4     1K      1K127753K       10    0     0  32,128
           cred    22     3K      3K127753K     3450    0     0  128
        subproc   156    10K     10K127753K     7882    0     0  32,64,256
           proc     2     1K      1K127753K        2    0     0  512
        session    12     2K      2K127753K       34    0     0  128
           pgrp    16     1K      1K127753K       45    0     0  32
         ippool     1     1K      1K127753K        1    0     0  16
        pfestat     0     0K      1K127753K    47349    0     0  16,32,64,512
            pic     5     1K      1K127753K        5    0     0  64,128
             lr     1     1K      1K127753K        1    0     0  512
       itable32   110     4K      4K127753K      110    0     0  32
       itable16   161    26K     26K127753K      161    0     0  128,256
        ifstate   694   159K    160K127753K     1735    0     0  16,32,64,128,1K
        pfe_ipc     0     0K      1K127753K    56218    0     0  16,32,64,128,1K
           mkey   250     4K      4K127753K      824    0     0  16,32,64
         ifaddr     9     1K      1K127753K        9    0     0  64
         sysctl     0     0K      1K127753K       30    0     0  256
         rtable    49     6K      6K127753K      307    0     0  16,32,64,128,512
        ifmaddr    22     1K      1K127753K       22    0     0  16,32
           ipfw    23    10K     10K127753K       48    0     0  16,32,64,512,2K
         ifstat   698   805K    805K127753K      698    0     0  128,512,2K
         rcache     4     8K      8K127753K        4    0     0  2K
          rnode    27     1K      1K127753K      285    0     0  16,32
        metrics     1     1K      1K127753K        3    0     0  128
      rtnexthop    57     9K      9K127753K      312    0     0  32,128,256,512
       iffamily    12     2K      2K127753K       12    0     0  128

Memory Totals:  In Use       Free    Requests
                 9311K        54K      489068

ITEM            SIZE     LIMIT    USED    FREE  REQUESTS
PIPE:            192,        0,      4,     81,     4422
SWAPMETA:        160,    95814,      0,      0,        0
unpcb:           160,        0,    114,     36,      279
ripcb:           192,    25330,      5,     37,        5
syncache:        128,    15359,      0,     64,        5
tcpcb:           576,    25330,     23,     12,       32
udpcb:           192,    25330,     14,     28,      255
socket:          256,    25330,    246,     26,      819
KNOTE:            96,        0,     27,     57,       71
NFSNODE:         352,        0,      0,      0,        0
```

```
NFSMOUNT:        544,        0,      0,      0,        0
VNODE:           224,        0,   2778,     43,     2778
NAMEI:          1024,        0,      0,      8,    40725
VMSPACE:         192,        0,     57,     71,     3906
PROC:            448,        0,     73,     17,     3923
DP fakepg:        64,        0,      0,      0,        0
PV ENTRY:         28,   499566,  44530, 152053,  1525141
MAP ENTRY:        48,        0,   1439,    134,   351075
KMAP ENTRY:       48,    35645,    179,    119,    10904
MAP:             108,        0,      7,      3,        7
VM OBJECT:        92,        0,   2575,    109,    66912

   792644 cpu context switches
  9863474 device interrupts
   286510 software interrupts
   390851 traps
  3596829 system calls
       16 kernel threads created
     3880  fork() calls
       27 vfork() calls
        0 rfork() calls
        0 swap pager pageins
        0 swap pager pages paged in
        0 swap pager pageouts
        0 swap pager pages paged out
      380 vnode pager pageins
      395 vnode pager pages paged in
      122 vnode pager pageouts
     1476 vnode pager pages paged out
        0 page daemon wakeups
        0 pages examined by the page daemon
      101 pages reactivated
   161722 copy-on-write faults
        0 copy-on-write optimized faults
    84623 zero fill pages zeroed
    83063 zero fill pages prezeroed
        7 intransit blocking page faults
   535606 total VM faults taken
        0 pages affected by kernel thread creation
   238254 pages affected by  fork()
     2535 pages affected by vfork()
        0 pages affected by rfork()
   283379 pages freed
        0 pages freed by daemon
   190091 pages freed by exiting processes
    17458 pages active
    29166 pages inactive
        0 pages in VM cache
    10395 pages wired down
   134610 pages free
     4096 bytes per page
   183419 total name lookups
          cache hits (90% pos + 7% neg) system 0% per-directory
          deletions 0%, falsehits 0%, toolong 0%

interrupt                   total       rate
ata0 irq14                 113338          3
mux irq7                   727643         21
fxp1 irq10                1178671         34
sio0 irq4                     833          0
clk irq0                  3439769         99
```

```
rtc irq8                    4403221        127
Total                       9863475        286

Kernel direct memory map:
        4423  pages used
     4057340  pages maximum
```

Note: **Kernel direct memory map** only displays for 64 bit platform.

show system virtual-memory scc (TX Matrix Router)

```
user@host> show system virtual-memory scc

Memory statistics by bucket size
Size   In Use   Free   Requests  HighWater  Couldfree
  16      898    126     749493    1280          0
  32     2018   1310     980643     640        632
  64     3490  13342     935420     320       5365
...

Memory usage type by bucket size
Size  Type(s)
  16  uc_devlist, COS, BPF, DEVFS mount, DEVFS node, vnodes, mount, pcb,
          soname, rman, bus, sysctl, ifstate, pfe_ipc, mkey, socket, rtable,
          ifmaddr, ipfw, rnode, iftable, temp, devbuf, atexit, proc-args, kld,
          MD disk
  32  atkbddev, Gzip trees, dirrem, mkdir, diradd, freefile, freefrag,
          indirdep, bmsafemap, newblk, tseg_qent, COS, vnodes,

...

Memory statistics by type                          Type  Kern
        Type  InUse MemUse HighUse  Limit Requests Limit Limit Size(s)
       isadev    12     1K      1K166400K       12    0     0  64
     atkbddev     2     1K      1K166400K        2    0     0  32
   uc_devlist    24     3K      3K166400K       24    0     0  16,2K
....

Memory Totals:  In Use    Free    Requests
                 6091K   1554K     2897122
```

show system virtual-memory sfc (TX Matrix Plus Router)

```
user@host> show system virtual-memory sfc 0
sfc0-re0:
--------------------------------------------------------------------------
         Type InUse MemUse HighUse Requests  Size(s)
CAM dev queue     1     1K       -        1  64
      entropy  1024    64K       -     1024  64
       linker   487  6272K       -     1163  16,32,64,4096,32768,131072
          USB   127    10K       -      127  16,32,64,128,256,1024,2048
        lockf    46     3K       -    98418  64
       USBdev    10     2K       -       34  16,128,2048,16384
ifstateSLLNode     0     0K       -     1096 16
       devbuf 21243 15683K       -    21810
16,32,64,128,256,512,1024,2048,4096,8192,16384,32768,65536,131072
         temp  1283   151K       -  2483472
16,32,64,128,256,512,2048,4096,8192,16384,32768,65536,131072
       ip6ndp     0     0K       -        4  64
   in6ifmulti     1     1K       -        1  64
   in6grentry     1     1K       -        1  64
    iflogical    20     5K       -       29  2048
     iffamily    45     6K       -       69  32,1024,2048
    rtnexthop   266    46K       -   608013  32,256,512,1024,2048,4096
```

```
      metrics    31     4K       -       54  256
        rnode   212     4K       -   607848  16,32
       rcache     4     8K       -        4  65536
       iflist     0     0K       -        6  16,64
     ifdevice    11     8K       -       17  16,32768
       ifstat   424   472K       -      427  512,16384,65536
         ipfw    42    23K       -      145
16,32,64,128,256,512,1024,16384,32768,65536,131072
      ifmaddr   415    11K       -      415  16,32
       rtable   329    28K       -   608066  16,32,64,128,1024,16384
       sysctl     0     0K       -   887976  16,32,64,4096,16384,32768
       ifaddr    64     5K       -       70  32,64,128
         mkey   331     6K       -    12528  16,128
      pfe_ipc     0     0K       -  7299115
16,32,64,128,256,512,1024,2048,4096,8192,16384,32768,65536,131072
      ifstate 1245054 70088K       -  3040437
16,32,64,128,256,512,1024,2048,4096,8192,16384,32768
    idxbucket     1     1K       -        1  16
     itable16  5069  1250K       -     5103  1024,4096
     itable32   157    10K       -      157  64
     itable64     2     1K       -        2  128
           lr     1     1K       -        4  16384
          pic    37     6K       -       37  64,16384
      pfestat     0     0K       -     6220  32,64,128,256,131072
       gencfg  1486   424K       -     2614  16,32,64,256,512,16384,32768,65536
          jsr     2     1K       -       22  16
          idl     1     4K       -      165
32,64,128,256,512,1024,2048,8192,16384,32768,65536,131072
       rtsmsg     0     0K       -       16  131072
       module   250    16K       -      250  64,128
     mtx_pool     1     8K       -        1  64,128
       DEVFS3   113    13K       -      114  256
       DEVFS1   106    24K       -      106  2048
         pgrp    15     1K       -     8600  64
      session    11     2K       -     2829  512
         proc     2     1K       -        2  16384
      subproc   296   572K       -    24689  2048,131072
         cred    38     5K       -   619244  256
       plimit    18     4K       -    21311  2048
      uidinfo     3     1K       -       10  32,512
    sysctloid  2701    82K       -     2701  16,32,64
    sysctltmp     0     0K       -    15572  16,32,64,1024
         umtx   171    11K       -      171  64
         SWAP     2   277K       -        2  64
          bus   779   125K       -     3072  16,32,64,128,32768
       bus-sc    67    62K       -     1477
16,32,64,512,1024,2048,8192,16384,65536,131072
      devstat     8    17K       -        8  16,131072
 eventhandler    46     2K       -       47  32,128
         kobj    93   186K       -      111  65536
        DEVFS     8     1K       -        9  16,64
         rman   106     7K       -      490  16,32,64
         sbuf     0     0K       -    28234  16,32,32768,131072
...
lcc0-re0:
------------------------------------------------------------------------
         Type InUse MemUse HighUse Requests  Size(s)
CAM dev queue     1     1K       -        1  64
      entropy  1024    64K       -     1024  64
       linker   487  6272K       -     1163  16,32,64,4096,32768,131072
          USB   127    10K       -      127  16,32,64,128,256,1024,2048
```

```
        lockf    23     2K       -   169585  64
       USBdev    10     2K       -       34  16,128,2048,16384
       devbuf  5128 10760K       -     5310
16,32,64,128,256,512,1024,2048,4096,8192,16384,32768,65536,131072
         temp  1285   151K       -    10770
16,32,64,128,256,512,2048,4096,8192,16384,32768,65536,131072
       ip6ndp     0     0K       -        4  64
    iflogical    20     5K       -       29  2048
     iffamily    45     6K       -       69  32,1024,2048
    rtnexthop   189    29K       -  1211988  32,256,512,1024,2048,4096
      metrics    11     2K       -       16  256
        rnode   135     3K       -   606391  16,32
       rcache     4     8K       -        4  65536
       iflist     0     0K       -        6  16,64
     ifdevice    11     8K       -       17  16,32768
       ifstat   412   471K       -      415  512,16384,65536
         ipfw    42    23K       -       91
16,32,64,128,256,512,1024,16384,32768,65536,131072
      ifmaddr   415    11K       -      415  16,32
       rtable   225    20K       -   606584  16,32,64,128,1024,16384
       sysctl     0     0K       -  2302479  16,32,64
       ifaddr    53     4K       -       69  32,64,128
         mkey   133     3K       -     8974  16,128
      pfe_ipc     0     0K       - 19035108
16,32,64,128,512,1024,2048,8192,16384,32768,65536,131072
      ifstate 710270 42176K       -  9583703
16,32,64,128,256,512,1024,2048,8192,16384,32768
    idxbucket     1     1K       -        1  16
     itable16  5045  1245K       -  1825178  1024,4096
     itable32   157    10K       -      157  64
     itable64     2     1K       -        2  128
           lr     1     1K       -        4  16384
          pic    37     6K       -       37  64,16384
      pfestat     0     0K       -     1682  32,64,128,256,131072
       gencfg  1486   424K       -     2812  16,32,64,256,512,16384,32768,65536
          jsr     0     0K       -       22  16
          idl     0     0K       -        4  32768,131072
       rtsmsg     0     0K       -        3  131072
       module   250    16K       -      250  64,128
     mtx_pool     1     8K       -        1  64,128
       DEVFS3   108    12K       -      109  256
       DEVFS1   101    23K       -      101  2048
         pgrp     5     1K       -      917  64
      session     5     1K       -      917  512
         proc     2     1K       -        2  16384
      subproc   217   441K       -     4867  2048,131072
         cred    21     3K       -    48719  256
       plimit     9     2K       -     5255  2048
      uidinfo     2     1K       -        2  32,512
    sysctloid  2786    85K       -     2786  16,32,64
    sysctltmp     0     0K       -     1833  16,32,64,1024
         umtx   126     8K       -      126  64
         SWAP     2   277K       -        2  64
          bus   780   125K       -     2734  16,32,64,128,32768
       bus-sc    69    69K       -     1194
16,32,64,512,1024,2048,8192,16384,65536,131072
      devstat     8    17K       -        8  16,131072
 eventhandler    45     2K       -       46  32,128
         kobj    93   186K       -      111  65536
        DEVFS     8     1K       -        9  16,64
         rman    94     6K       -      477  16,32,64
```

```
          sbuf     0     0K       -      532  16,32,32768,131072
   NULLFS hash     1     1K       -        1  64
     taskqueue     5     1K       -        5  64
    turnstiles   127     8K       -      127  64
        Unitno     6     1K       -       44  16,64
      ioctlops     0     0K       -  1771718  16,32,64,128,8192,16384,65536,131072

           iov     0     0K       -    79425  16,64,128,256,512,1024,2048,131072
           msg     4    25K       -        4  32768,131072
           sem     4     7K       -        4  16384,32768,131072
           shm     2    13K       -        4  32768
          ttys    93    16K       -      195  512,32768
       soname    31     3K       -   389284  16,32,64,256
           pcb   101    16K       -     4374
16,32,64,128,1024,2048,4096,16384,65536
    BIO buffer    40    80K       -      750  65536
      vfscache     1   512K       -        1  65536
cluster_save buffer     0     0K       -       55 32,64
      VFS hash     1   256K       -        1  32,64
        vnodes     1     1K       -        1  512
         mount   266    21K       -      481  16,32,64,128,256,4096,32768
   vnodemarker     0     0K       -     2497  16384
     pfs_nodes    25     3K       -       25  128
   pfs_vncache   144     5K       -      386  32
           STP     1     1K       -        1  64
          GEOM   173    15K       -     1068
16,32,64,128,256,512,2048,16384,32768,131072
      syncache     1     8K       -        1
16,32,64,128,256,512,2048,16384,32768,131072
      tlv_stat     0     0K       -      223
16,32,64,128,256,512,2048,16384,32768,131072
    NFS daemon     1     8K       -        1
16,32,64,128,256,512,2048,16384,32768,131072
      p1003.1b     1     1K       -        1  16
       MD disk     9    18K       -        9  65536
   ata_generic     2     2K       -       25  16,16384,32768
   ISOFS mount     7     1K       -       13  512
    ISOFS node  1439   135K       -     1453  128
       CAM SIM     1     1K       -        1  64
       CAM XPT     6     1K       -        9  16,64,16384
    CAM periph     1     1K       -        1  128
     ad_driver     2     1K       -        2  256
       pagedep     1    64K       -      105  64
      inodedep     1   256K       -      552  256
        newblk     1     1K       -      327  64,4096
     bmsafemap     0     0K       -       19  64
   allocdirect     0     0K       -      326  128
      freefrag     0     0K       -       31  32
      freeblks     0     0K       -      103  2048
      freefile     0     0K       -      175  32
        diradd     0     0K       -      590  64
         mkdir     0     0K       -      166  32
        dirrem     0     0K       -      382  32
      savedino     0     0K       -      283  512
     UFS mount    15    36K       -       15  2048,65536,131072
       ata_dma     6     1K       -        6  256
       UMAHash     1     4K       -        5  4096,16384,32768,65536,131072
          cdev    26     3K       -       26  256
     file desc   111    25K       -     5199  16,1024,2048,16384
     VM pgdata     2    65K       -        2  64
         sigio     1     1K       -       27  32
```

```
          kenv    30     5K       -       33  16,32,64,131072
      atkbddev     2     1K       -        2  32
        kqueue     0     0K       -       88  1024,4096,32768
     proc-args    28     2K       -     3970  32,64,128,256,512,1024
        isadev    23     2K       -       23  64
        zombie     1     1K       -     4651  128
      ithread    92     7K       -       92  16,64,256
     legacydrv     3     1K       -        3  16
       memdesc     1     4K       -        1  131072
      nexusdev     2     1K       -        2  16
     CAM queue     3     1K       -        3  16
        KTRACE   100    10K       -      100  128
        kbdmux     5     9K       -        5  128,2048,65536,131072
ITEM            SIZE     LIMIT     USED    FREE  REQUESTS
UMA Kegs:        136,        0,      71,      1,       71
...
```

show system virtual-memory | display xml

```
user@host> show system virtual-memory | display xml
<rpc-reply xmlns:junos="http://xml.juniper.net/junos/10.2R1/junos">
    <system-virtual-memory-information>
        <vmstat-memstat-malloc>
            <memstat-name>CAM dev queue</memstat-name>
            <inuse>1</inuse>
            <memuse>1</memuse>
            <high-use>-</high-use>
            <memstat-req>1</memstat-req>
            <memstat-size>64</memstat-size>
            <memstat-name>entropy</memstat-name>
            <inuse>1024</inuse>
            <memuse>64</memuse>
            <high-use>-</high-use>
            <memstat-req>1024</memstat-req>
            <memstat-size>64</memstat-size>
            <memstat-name>linker</memstat-name>
            <inuse>481</inuse>
            <memuse>1871</memuse>
            <high-use>-</high-use>
            <memstat-req>1145</memstat-req>
            <memstat-size>16,32,64,4096,32768,131072</memstat-size>
            <memstat-name>lockf</memstat-name>
            <inuse>56</inuse>
            <memuse>4</memuse>
            <high-use>-</high-use>
            <memstat-req>5998</memstat-req>
            <memstat-size>64</memstat-size>
            <memstat-name>devbuf</memstat-name>
            <inuse>2094</inuse>
            <memuse>3877</memuse>
            <high-use>-</high-use>
            <memstat-req>2099</memstat-req>

<memstat-size>16,32,64,128,512,1024,4096,8192,16384,32768,65536,131072</memstat-size>

            <memstat-name>temp</memstat-name>
            <inuse>21</inuse>
            <memuse>66</memuse>
            <high-use>-</high-use>
            <memstat-req>3127</memstat-req>

<memstat-size>16,32,64,128,256,512,2048,4096,8192,16384,32768,65536,131072</memstat-size>
```

```
<memstat-name>ip6ndp</memstat-name>
<inuse>0</inuse>
<memuse>0</memuse>
<high-use>-</high-use>
<memstat-req>4</memstat-req>
<memstat-size>64</memstat-size>
<memstat-name>in6ifmulti</memstat-name>
<inuse>1</inuse>
<memuse>1</memuse>
<high-use>-</high-use>
<memstat-req>1</memstat-req>
<memstat-size>64</memstat-size>
<memstat-name>in6grentry</memstat-name>
<inuse>1</inuse>
<memuse>1</memuse>
<high-use>-</high-use>
<memstat-req>1</memstat-req>
<memstat-size>64</memstat-size>
<memstat-name>iflogical</memstat-name>
<inuse>13</inuse>
<memuse>3</memuse>
<high-use>-</high-use>
<memstat-req>13</memstat-req>
<memstat-size>64,2048</memstat-size>
<memstat-name>iffamily</memstat-name>
<inuse>28</inuse>
<memuse>4</memuse>
<high-use>-</high-use>
<memstat-req>28</memstat-req>
<memstat-size>32,1024,2048</memstat-size>
<memstat-name>rtnexthop</memstat-name>
<inuse>127</inuse>
<memuse>18</memuse>
<high-use>-</high-use>
<memstat-req>129</memstat-req>
<memstat-size>32,256,512,1024,2048,4096</memstat-size>
<memstat-name>metrics</memstat-name>
<inuse>3</inuse>
<memuse>1</memuse>
<high-use>-</high-use>
<memstat-req>5</memstat-req>
<memstat-size>256</memstat-size>
<memstat-name>inifmulti</memstat-name>
<inuse>3</inuse>
<memuse>1</memuse>
<high-use>-</high-use>
<memstat-req>3</memstat-req>
<memstat-size>64</memstat-size>
<memstat-name>ingrentry</memstat-name>
<inuse>6</inuse>
<memuse>1</memuse>
<high-use>-</high-use>
<memstat-req>6</memstat-req>
<memstat-size>64</memstat-size>
<memstat-name>rnode</memstat-name>
<inuse>68</inuse>
<memuse>2</memuse>
<high-use>-</high-use>
<memstat-req>76</memstat-req>
<memstat-size>16,32</memstat-size>
<memstat-name>rcache</memstat-name>
```

```
                <inuse>4</inuse>
                <memuse>8</memuse>
                <high-use>-</high-use>
                <memstat-req>4</memstat-req>
                <memstat-size>65536</memstat-size>
                <memstat-name>ifdevice</memstat-name>
                <inuse>4</inuse>
                <memuse>1</memuse>
                <high-use>-</high-use>
                <memstat-req>4</memstat-req>
                <memstat-size>16</memstat-size>
                <memstat-name>ifstat</memstat-name>
                <inuse>40</inuse>
                <memuse>22</memuse>
                <high-use>-</high-use>
                <memstat-req>40</memstat-req>
                <memstat-size>512,16384,32768</memstat-size>
                <memstat-name>ipfw</memstat-name>
                <inuse>42</inuse>
                <memuse>23</memuse>
                <high-use>-</high-use>
                <memstat-req>91</memstat-req>

<memstat-size>16,32,64,128,256,512,1024,16384,32768,65536,131072</memstat-size>
                <memstat-name>ifmaddr</memstat-name>
                <inuse>103</inuse>
                <memuse>3</memuse>
                <high-use>-</high-use>
                <memstat-req>103</memstat-req>
                <memstat-size>16,32</memstat-size>
                <memstat-name>rtable</memstat-name>
                <inuse>129</inuse>
                <memuse>14</memuse>
                <high-use>-</high-use>
                <memstat-req>139</memstat-req>
                <memstat-size>16,32,64,128,1024,16384</memstat-size>
                <memstat-name>sysctl</memstat-name>
                <inuse>0</inuse>
                <memuse>0</memuse>
                <high-use>-</high-use>
                <memstat-req>14847</memstat-req>
                <memstat-size>16,32,64,4096,16384,32768</memstat-size>
                <memstat-name>ifaddr</memstat-name>
                <inuse>29</inuse>
                <memuse>3</memuse>
                <high-use>-</high-use>
                <memstat-req>29</memstat-req>
                <memstat-size>64,128</memstat-size>
                <memstat-name>mkey</memstat-name>
                <inuse>345</inuse>
                <memuse>6</memuse>
                <high-use>-</high-use>
                <memstat-req>2527</memstat-req>
                <memstat-size>16,128</memstat-size>
                <memstat-name>pfe_ipc</memstat-name>
                <inuse>0</inuse>
                <memuse>0</memuse>
                <high-use>-</high-use>
                <memstat-req>1422</memstat-req>

<memstat-size>16,32,64,128,512,1024,2048,8192,16384,32768,65536,131072</memstat-size>
```



```
                <memstat-name>ifstate</memstat-name>
                <inuse>594</inuse>
                <memuse>51</memuse>
                <high-use>-</high-use>
                <memstat-req>655</memstat-req>

<memstat-size>16,32,64,128,256,1024,2048,4096,16384,32768</memstat-size>
                <memstat-name>itable16</memstat-name>
                <inuse>276</inuse>
                <memuse>52</memuse>
                <high-use>-</high-use>
                <memstat-req>294</memstat-req>
                <memstat-size>1024,4096</memstat-size>
                <memstat-name>itable32</memstat-name>
                <inuse>160</inuse>
                <memuse>10</memuse>
                <high-use>-</high-use>
                <memstat-req>160</memstat-req>
                <memstat-size>64</memstat-size>
                <memstat-name>itable64</memstat-name>
                <inuse>2</inuse>
                <memuse>1</memuse>
                <high-use>-</high-use>
                <memstat-req>2</memstat-req>
                <memstat-size>128</memstat-size>
                <memstat-name>lr</memstat-name>
                <inuse>1</inuse>
                <memuse>1</memuse>
                <high-use>-</high-use>
                <memstat-req>1</memstat-req>
                <memstat-size>16384</memstat-size>
                <memstat-name>pic</memstat-name>
                <inuse>5</inuse>
                <memuse>1</memuse>
                <high-use>-</high-use>
                <memstat-req>5</memstat-req>
                <memstat-size>64,512</memstat-size>
                <memstat-name>pfestat</memstat-name>
                <inuse>0</inuse>
                <memuse>0</memuse>
                <high-use>-</high-use>
                <memstat-req>162</memstat-req>
                <memstat-size>16,32,128,256,16384</memstat-size>
                <memstat-name>gencfg</memstat-name>
                <inuse>224</inuse>
                <memuse>56</memuse>
                <high-use>-</high-use>
                <memstat-req>540</memstat-req>
                <memstat-size>16,32,64,256,512,32768,65536</memstat-size>
                <memstat-name>jsr</memstat-name>
                <inuse>2</inuse>
                <memuse>1</memuse>
                <high-use>-</high-use>
                <memstat-req>4</memstat-req>
                <memstat-size>16</memstat-size>
                <memstat-name>idl</memstat-name>
                <inuse>0</inuse>
                <memuse>0</memuse>
                <high-use>-</high-use>
                <memstat-req>13</memstat-req>
```

```
<memstat-size>16,32,64,128,256,4096,16384,32768,131072</memstat-size>

 <memstat-name>rtsmsg</memstat-name>
 <inuse>0</inuse>
 <memuse>0</memuse>
 <high-use>-</high-use>
 <memstat-req>2</memstat-req>
 <memstat-size>131072</memstat-size>
 <memstat-name>module</memstat-name>
 <inuse>249</inuse>
 <memuse>16</memuse>
 <high-use>-</high-use>
 <memstat-req>249</memstat-req>
 <memstat-size>64,128</memstat-size>
 <memstat-name>mtx_pool</memstat-name>
 <inuse>1</inuse>
 <memuse>8</memuse>
 <high-use>-</high-use>
 <memstat-req>1</memstat-req>
 <memstat-size>64,128</memstat-size>
 <memstat-name>DEVFS3</memstat-name>
 <inuse>109</inuse>
 <memuse>12</memuse>
 <high-use>-</high-use>
 <memstat-req>117</memstat-req>
 <memstat-size>256</memstat-size>
 <memstat-name>DEVFS1</memstat-name>
 <inuse>102</inuse>
 <memuse>23</memuse>
 <high-use>-</high-use>
 <memstat-req>109</memstat-req>
 <memstat-size>2048</memstat-size>
 <memstat-name>pgrp</memstat-name>
 <inuse>12</inuse>
 <memuse>1</memuse>
 <high-use>-</high-use>
 <memstat-req>21</memstat-req>
 <memstat-size>64</memstat-size>
 <memstat-name>session</memstat-name>
 <inuse>8</inuse>
 <memuse>1</memuse>
 <high-use>-</high-use>
 <memstat-req>15</memstat-req>
 <memstat-size>512</memstat-size>
 <memstat-name>proc</memstat-name>
 <inuse>2</inuse>
 <memuse>1</memuse>
 <high-use>-</high-use>
 <memstat-req>2</memstat-req>
 <memstat-size>16384</memstat-size>
 <memstat-name>subproc</memstat-name>
 <inuse>244</inuse>
 <memuse>496</memuse>
 <high-use>-</high-use>
 <memstat-req>1522</memstat-req>
 <memstat-size>2048,131072</memstat-size>
 <memstat-name>cred</memstat-name>
 <inuse>30</inuse>
 <memuse>4</memuse>
 <high-use>-</high-use>
 <memstat-req>11409</memstat-req>
```



```
                <memstat-size>256</memstat-size>
                <memstat-name>plimit</memstat-name>
                <inuse>17</inuse>
                <memuse>4</memuse>
                <high-use>-</high-use>
                <memstat-req>133</memstat-req>
                <memstat-size>2048</memstat-size>
                <memstat-name>uidinfo</memstat-name>
                <inuse>3</inuse>
                <memuse>1</memuse>
                <high-use>-</high-use>
                <memstat-req>6</memstat-req>
                <memstat-size>32,512</memstat-size>
                <memstat-name>sysctloid</memstat-name>
                <inuse>1117</inuse>
                <memuse>34</memuse>
                <high-use>-</high-use>
                <memstat-req>1117</memstat-req>
                <memstat-size>16,32,64</memstat-size>
                <memstat-name>sysctltmp</memstat-name>
                <inuse>0</inuse>
                <memuse>0</memuse>
                <high-use>-</high-use>
                <memstat-req>743</memstat-req>
                <memstat-size>16,32,64,1024</memstat-size>
                <memstat-name>umtx</memstat-name>
                <inuse>144</inuse>
                <memuse>9</memuse>
                <high-use>-</high-use>
                <memstat-req>144</memstat-req>
                <memstat-size>64</memstat-size>
                <memstat-name>SWAP</memstat-name>
                <inuse>2</inuse>
                <memuse>209</memuse>
                <high-use>-</high-use>
                <memstat-req>2</memstat-req>
                <memstat-size>64</memstat-size>
                <memstat-name>bus</memstat-name>
                <inuse>496</inuse>
                <memuse>55</memuse>
                <high-use>-</high-use>
                <memstat-req>1196</memstat-req>
                <memstat-size>16,32,64,128,32768</memstat-size>
                <memstat-name>bus-sc</memstat-name>
                <inuse>23</inuse>
                <memuse>33</memuse>
                <high-use>-</high-use>
                <memstat-req>335</memstat-req>

<memstat-size>16,32,64,512,1024,2048,8192,16384,65536,131072</memstat-size>
                <memstat-name>devstat</memstat-name>
                <inuse>10</inuse>
                <memuse>21</memuse>
                <high-use>-</high-use>
                <memstat-req>10</memstat-req>
                <memstat-size>16,131072</memstat-size>
                <memstat-name>eventhandler</memstat-name>
                <inuse>35</inuse>
                <memuse>2</memuse>
                <high-use>-</high-use>
                <memstat-req>36</memstat-req>
```

```
<memstat-size>32,128</memstat-size>
<memstat-name>kobj</memstat-name>
<inuse>93</inuse>
<memuse>186</memuse>
<high-use>-</high-use>
<memstat-req>111</memstat-req>
<memstat-size>65536</memstat-size>
<memstat-name>DEVFS</memstat-name>
<inuse>8</inuse>
<memuse>1</memuse>
<high-use>-</high-use>
<memstat-req>9</memstat-req>
<memstat-size>16,64</memstat-size>
<memstat-name>rman</memstat-name>
<inuse>71</inuse>
<memuse>5</memuse>
<high-use>-</high-use>
<memstat-req>433</memstat-req>
<memstat-size>16,32,64</memstat-size>
<memstat-name>sbuf</memstat-name>
<inuse>0</inuse>
<memuse>0</memuse>
<high-use>-</high-use>
<memstat-req>522</memstat-req>
<memstat-size>16,32,32768,131072</memstat-size>
<memstat-name>NULLFS hash</memstat-name>
<inuse>1</inuse>
<memuse>1</memuse>
<high-use>-</high-use>
<memstat-req>1</memstat-req>
<memstat-size>64</memstat-size>
<memstat-name>taskqueue</memstat-name>
<inuse>5</inuse>
<memuse>1</memuse>
<high-use>-</high-use>
<memstat-req>5</memstat-req>
<memstat-size>64</memstat-size>
<memstat-name>turnstiles</memstat-name>
<inuse>145</inuse>
<memuse>10</memuse>
<high-use>-</high-use>
<memstat-req>145</memstat-req>
<memstat-size>64</memstat-size>
<memstat-name>Unitno</memstat-name>
<inuse>8</inuse>
<memuse>1</memuse>
<high-use>-</high-use>
<memstat-req>44</memstat-req>
<memstat-size>16,64</memstat-size>
<memstat-name>ioctlops</memstat-name>
<inuse>0</inuse>
<memuse>0</memuse>
<high-use>-</high-use>
<memstat-req>27622</memstat-req>
<memstat-size>16,64,8192,16384,131072</memstat-size>
<memstat-name>iov</memstat-name>
<inuse>0</inuse>
<memuse>0</memuse>
<high-use>-</high-use>
<memstat-req>18578</memstat-req>
<memstat-size>16,64,128,256,512,1024,2048,131072</memstat-size>
```



```
                <memstat-name>msg</memstat-name>
                <inuse>4</inuse>
                <memuse>25</memuse>
                <high-use>-</high-use>
                <memstat-req>4</memstat-req>
                <memstat-size>32768,131072</memstat-size>
                <memstat-name>sem</memstat-name>
                <inuse>4</inuse>
                <memuse>7</memuse>
                <high-use>-</high-use>
                <memstat-req>4</memstat-req>
                <memstat-size>16384,32768,131072</memstat-size>
                <memstat-name>shm</memstat-name>
                <inuse>9</inuse>
                <memuse>20</memuse>
                <high-use>-</high-use>
                <memstat-req>14</memstat-req>
                <memstat-size>32768</memstat-size>
                <memstat-name>ttys</memstat-name>
                <inuse>321</inuse>
                <memuse>61</memuse>
                <high-use>-</high-use>
                <memstat-req>528</memstat-req>
                <memstat-size>512,32768</memstat-size>
                <memstat-name>ptys</memstat-name>
                <inuse>1</inuse>
                <memuse>1</memuse>
                <high-use>-</high-use>
                <memstat-req>1</memstat-req>
                <memstat-size>128</memstat-size>
                <memstat-name>mbuf_tag</memstat-name>
                <inuse>0</inuse>
                <memuse>0</memuse>
                <high-use>-</high-use>
                <memstat-req>23383</memstat-req>
                <memstat-size>16</memstat-size>
                <memstat-name>soname</memstat-name>
                <inuse>115</inuse>
                <memuse>12</memuse>
                <high-use>-</high-use>
                <memstat-req>24712</memstat-req>
                <memstat-size>16,32,64,256</memstat-size>
                <memstat-name>pcb</memstat-name>
                <inuse>216</inuse>
                <memuse>33</memuse>
                <high-use>-</high-use>
                <memstat-req>484</memstat-req>

<memstat-size>16,32,64,128,1024,2048,4096,16384,32768,65536</memstat-size>
                <memstat-name>BIO buffer</memstat-name>
                <inuse>43</inuse>
                <memuse>86</memuse>
                <high-use>-</high-use>
                <memstat-req>405</memstat-req>
                <memstat-size>65536</memstat-size>
                <memstat-name>vfscache</memstat-name>
                <inuse>1</inuse>
                <memuse>256</memuse>
                <high-use>-</high-use>
                <memstat-req>1</memstat-req>
                <memstat-size>65536</memstat-size>
```

```
                <memstat-name>cluster_save buffer</memstat-name>
                <inuse>0</inuse>
                <memuse>0</memuse>
                <high-use>-</high-use>
                <memstat-req>2</memstat-req>
                <memstat-size>32,64</memstat-size>
                <memstat-name>VFS hash</memstat-name>
                <inuse>1</inuse>
                <memuse>128</memuse>
                <high-use>-</high-use>
                <memstat-req>1</memstat-req>
                <memstat-size>32,64</memstat-size>
                <memstat-name>vnodes</memstat-name>
                <inuse>1</inuse>
                <memuse>1</memuse>
                <high-use>-</high-use>
                <memstat-req>1</memstat-req>
                <memstat-size>512</memstat-size>
                <memstat-name>mount</memstat-name>
                <inuse>290</inuse>
                <memuse>23</memuse>
                <high-use>-</high-use>
                <memstat-req>535</memstat-req>
                <memstat-size>16,32,64,128,256,4096,32768</memstat-size>
                <memstat-name>vnodemarker</memstat-name>
                <inuse>0</inuse>
                <memuse>0</memuse>
                <high-use>-</high-use>
                <memstat-req>498</memstat-req>
                <memstat-size>16384</memstat-size>
                <memstat-name>pfs_nodes</memstat-name>
                <inuse>25</inuse>
                <memuse>3</memuse>
                <high-use>-</high-use>
                <memstat-req>25</memstat-req>
                <memstat-size>128</memstat-size>
                <memstat-name>pfs_vncache</memstat-name>
                <inuse>27</inuse>
                <memuse>1</memuse>
                <high-use>-</high-use>
                <memstat-req>53</memstat-req>
                <memstat-size>32</memstat-size>
                <memstat-name>STP</memstat-name>
                <inuse>1</inuse>
                <memuse>1</memuse>
                <high-use>-</high-use>
                <memstat-req>1</memstat-req>
                <memstat-size>64</memstat-size>
                <memstat-name>GEOM</memstat-name>
                <inuse>146</inuse>
                <memuse>11</memuse>
                <high-use>-</high-use>
                <memstat-req>1042</memstat-req>

<memstat-size>16,32,64,128,256,512,2048,16384,32768,131072</memstat-size>
                <memstat-name>syncache</memstat-name>
                <inuse>1</inuse>
                <memuse>8</memuse>
                <high-use>-</high-use>
                <memstat-req>1</memstat-req>
```



```
<memstat-size>16,32,64,128,256,512,2048,16384,32768,131072</memstat-size>
            <memstat-name>tlv_stat</memstat-name>
            <inuse>0</inuse>
            <memuse>0</memuse>
            <high-use>-</high-use>
            <memstat-req>8</memstat-req>

<memstat-size>16,32,64,128,256,512,2048,16384,32768,131072</memstat-size>
            <memstat-name>NFS daemon</memstat-name>
            <inuse>1</inuse>
            <memuse>8</memuse>
            <high-use>-</high-use>
            <memstat-req>1</memstat-req>

<memstat-size>16,32,64,128,256,512,2048,16384,32768,131072</memstat-size>
            <memstat-name>p1003.1b</memstat-name>
            <inuse>1</inuse>
            <memuse>1</memuse>
            <high-use>-</high-use>
            <memstat-req>1</memstat-req>
            <memstat-size>16</memstat-size>
            <memstat-name>MD disk</memstat-name>
            <inuse>10</inuse>
            <memuse>20</memuse>
            <high-use>-</high-use>
            <memstat-req>10</memstat-req>
            <memstat-size>65536</memstat-size>
            <memstat-name>ata_generic</memstat-name>
            <inuse>1</inuse>
            <memuse>1</memuse>
            <high-use>-</high-use>
            <memstat-req>6</memstat-req>
            <memstat-size>16,16384,32768</memstat-size>
            <memstat-name>ISOFS mount</memstat-name>
            <inuse>8</inuse>
            <memuse>1</memuse>
            <high-use>-</high-use>
            <memstat-req>15</memstat-req>
            <memstat-size>512</memstat-size>
            <memstat-name>ISOFS node</memstat-name>
            <inuse>1440</inuse>
            <memuse>135</memuse>
            <high-use>-</high-use>
            <memstat-req>1457</memstat-req>
            <memstat-size>128</memstat-size>
            <memstat-name>CAM SIM</memstat-name>
            <inuse>1</inuse>
            <memuse>1</memuse>
            <high-use>-</high-use>
            <memstat-req>1</memstat-req>
            <memstat-size>64</memstat-size>
            <memstat-name>CAM XPT</memstat-name>
            <inuse>6</inuse>
            <memuse>1</memuse>
            <high-use>-</high-use>
            <memstat-req>9</memstat-req>
            <memstat-size>16,64,16384</memstat-size>
            <memstat-name>CAM periph</memstat-name>
            <inuse>1</inuse>
            <memuse>1</memuse>
            <high-use>-</high-use>
```

```
<memstat-req>1</memstat-req>
<memstat-size>128</memstat-size>
<memstat-name>ad_driver</memstat-name>
<inuse>1</inuse>
<memuse>1</memuse>
<high-use>-</high-use>
<memstat-req>1</memstat-req>
<memstat-size>256</memstat-size>
<memstat-name>pagedep</memstat-name>
<inuse>1</inuse>
<memuse>32</memuse>
<high-use>-</high-use>
<memstat-req>106</memstat-req>
<memstat-size>64</memstat-size>
<memstat-name>inodedep</memstat-name>
<inuse>1</inuse>
<memuse>128</memuse>
<high-use>-</high-use>
<memstat-req>464</memstat-req>
<memstat-size>256</memstat-size>
<memstat-name>newblk</memstat-name>
<inuse>1</inuse>
<memuse>1</memuse>
<high-use>-</high-use>
<memstat-req>336</memstat-req>
<memstat-size>64,4096</memstat-size>
<memstat-name>bmsafemap</memstat-name>
<inuse>0</inuse>
<memuse>0</memuse>
<high-use>-</high-use>
<memstat-req>63</memstat-req>
<memstat-size>64</memstat-size>
<memstat-name>allocdirect</memstat-name>
<inuse>0</inuse>
<memuse>0</memuse>
<high-use>-</high-use>
<memstat-req>320</memstat-req>
<memstat-size>128</memstat-size>
<memstat-name>indirdep</memstat-name>
<inuse>0</inuse>
<memuse>0</memuse>
<high-use>-</high-use>
<memstat-req>17</memstat-req>
<memstat-size>32</memstat-size>
<memstat-name>allocindir</memstat-name>
<inuse>0</inuse>
<memuse>0</memuse>
<high-use>-</high-use>
<memstat-req>15</memstat-req>
<memstat-size>64</memstat-size>
<memstat-name>freefrag</memstat-name>
<inuse>0</inuse>
<memuse>0</memuse>
<high-use>-</high-use>
<memstat-req>12</memstat-req>
<memstat-size>32</memstat-size>
<memstat-name>freeblks</memstat-name>
<inuse>0</inuse>
<memuse>0</memuse>
<high-use>-</high-use>
<memstat-req>40</memstat-req>
```



```
<memstat-size>2048</memstat-size>
<memstat-name>freefile</memstat-name>
<inuse>0</inuse>
<memuse>0</memuse>
<high-use>-</high-use>
<memstat-req>101</memstat-req>
<memstat-size>32</memstat-size>
<memstat-name>diradd</memstat-name>
<inuse>0</inuse>
<memuse>0</memuse>
<high-use>-</high-use>
<memstat-req>465</memstat-req>
<memstat-size>64</memstat-size>
<memstat-name>mkdir</memstat-name>
<inuse>0</inuse>
<memuse>0</memuse>
<high-use>-</high-use>
<memstat-req>136</memstat-req>
<memstat-size>32</memstat-size>
<memstat-name>dirrem</memstat-name>
<inuse>0</inuse>
<memuse>0</memuse>
<high-use>-</high-use>
<memstat-req>168</memstat-req>
<memstat-size>32</memstat-size>
<memstat-name>newdirblk</memstat-name>
<inuse>0</inuse>
<memuse>0</memuse>
<high-use>-</high-use>
<memstat-req>1</memstat-req>
<memstat-size>32</memstat-size>
<memstat-name>savedino</memstat-name>
<inuse>0</inuse>
<memuse>0</memuse>
<high-use>-</high-use>
<memstat-req>157</memstat-req>
<memstat-size>512</memstat-size>
<memstat-name>UFS mount</memstat-name>
<inuse>15</inuse>
<memuse>36</memuse>
<high-use>-</high-use>
<memstat-req>15</memstat-req>
<memstat-size>2048,65536,131072</memstat-size>
<memstat-name>ata_dma</memstat-name>
<inuse>2</inuse>
<memuse>1</memuse>
<high-use>-</high-use>
<memstat-req>2</memstat-req>
<memstat-size>256</memstat-size>
<memstat-name>UMAHash</memstat-name>
<inuse>1</inuse>
<memuse>2</memuse>
<high-use>-</high-use>
<memstat-req>4</memstat-req>
<memstat-size>4096,16384,32768,65536</memstat-size>
<memstat-name>cdev</memstat-name>
<inuse>22</inuse>
<memuse>3</memuse>
<high-use>-</high-use>
<memstat-req>22</memstat-req>
<memstat-size>256</memstat-size>
```

```
<memstat-name>file desc</memstat-name>
<inuse>141</inuse>
<memuse>32</memuse>
<high-use>-</high-use>
<memstat-req>1583</memstat-req>
<memstat-size>16,1024,2048,16384</memstat-size>
<memstat-name>VM pgdata</memstat-name>
<inuse>2</inuse>
<memuse>65</memuse>
<high-use>-</high-use>
<memstat-req>2</memstat-req>
<memstat-size>64</memstat-size>
<memstat-name>sigio</memstat-name>
<inuse>1</inuse>
<memuse>1</memuse>
<high-use>-</high-use>
<memstat-req>20</memstat-req>
<memstat-size>32</memstat-size>
<memstat-name>kenv</memstat-name>
<inuse>24</inuse>
<memuse>5</memuse>
<high-use>-</high-use>
<memstat-req>27</memstat-req>
<memstat-size>16,32,64,131072</memstat-size>
<memstat-name>atkbddev</memstat-name>
<inuse>2</inuse>
<memuse>1</memuse>
<high-use>-</high-use>
<memstat-req>2</memstat-req>
<memstat-size>32</memstat-size>
<memstat-name>kqueue</memstat-name>
<inuse>15</inuse>
<memuse>9</memuse>
<high-use>-</high-use>
<memstat-req>19</memstat-req>
<memstat-size>1024,4096,32768</memstat-size>
<memstat-name>proc-args</memstat-name>
<inuse>57</inuse>
<memuse>3</memuse>
<high-use>-</high-use>
<memstat-req>1001</memstat-req>
<memstat-size>16,32,64,128,256,512,1024</memstat-size>
<memstat-name>isadev</memstat-name>
<inuse>21</inuse>
<memuse>2</memuse>
<high-use>-</high-use>
<memstat-req>21</memstat-req>
<memstat-size>64</memstat-size>
<memstat-name>zombie</memstat-name>
<inuse>0</inuse>
<memuse>0</memuse>
<high-use>-</high-use>
<memstat-req>1278</memstat-req>
<memstat-size>128</memstat-size>
<memstat-name>ithread</memstat-name>
<inuse>69</inuse>
<memuse>5</memuse>
<high-use>-</high-use>
<memstat-req>69</memstat-req>
<memstat-size>16,64,256</memstat-size>
<memstat-name>legacydrv</memstat-name>
```



```
            <inuse>4</inuse>
            <memuse>1</memuse>
            <high-use>-</high-use>
            <memstat-req>4</memstat-req>
            <memstat-size>16</memstat-size>
            <memstat-name>memdesc</memstat-name>
            <inuse>1</inuse>
            <memuse>4</memuse>
            <high-use>-</high-use>
            <memstat-req>1</memstat-req>
            <memstat-size>131072</memstat-size>
            <memstat-name>nexusdev</memstat-name>
            <inuse>2</inuse>
            <memuse>1</memuse>
            <high-use>-</high-use>
            <memstat-req>2</memstat-req>
            <memstat-size>16</memstat-size>
            <memstat-name>CAM queue</memstat-name>
            <inuse>3</inuse>
            <memuse>1</memuse>
            <high-use>-</high-use>
            <memstat-req>3</memstat-req>
            <memstat-size>16</memstat-size>
            <memstat-name>$PIR</memstat-name>
            <inuse>4</inuse>
            <memuse>1</memuse>
            <high-use>-</high-use>
            <memstat-req>4</memstat-req>
            <memstat-size>32</memstat-size>
            <memstat-name>KTRACE</memstat-name>
            <inuse>100</inuse>
            <memuse>10</memuse>
            <high-use>-</high-use>
            <memstat-req>100</memstat-req>
            <memstat-size>128</memstat-size>
            <memstat-name>kbdmux</memstat-name>
            <inuse>5</inuse>
            <memuse>9</memuse>
            <high-use>-</high-use>
            <memstat-req>5</memstat-req>
            <memstat-size>128,2048,65536,131072</memstat-size>
        </vmstat-memstat-malloc>
        <vmstat-memstat-zone>
            <zone-name>UMA Kegs:</zone-name>
            <zone-size>136</zone-size>
            <count-limit>0</count-limit>
            <used>71</used>
            <free>1</free>
            <zone-req>71</zone-req>
            <zone-name>UMA Zones:</zone-name>
            <zone-size>120</zone-size>
            <count-limit>0</count-limit>
            <used>71</used>
            <free>19</free>
            <zone-req>71</zone-req>
            <zone-name>UMA Slabs:</zone-name>
            <zone-size>64</zone-size>
            <count-limit>0</count-limit>
            <used>490</used>
            <free>41</free>
            <zone-req>579</zone-req>
```

```
<zone-name>UMA RCntSlabs:</zone-name>
<zone-size>104</zone-size>
<count-limit>0</count-limit>
<used>276</used>
<free>20</free>
<zone-req>276</zone-req>
<zone-name>UMA Hash:</zone-name>
<zone-size>128</zone-size>
<count-limit>0</count-limit>
<used>4</used>
<free>26</free>
<zone-req>5</zone-req>
<zone-name>16 Bucket:</zone-name>
<zone-size>76</zone-size>
<count-limit>0</count-limit>
<used>30</used>
<free>20</free>
<zone-req>30</zone-req>
<zone-name>32 Bucket:</zone-name>
<zone-size>140</zone-size>
<count-limit>0</count-limit>
<used>33</used>
<free>23</free>
<zone-req>33</zone-req>
<zone-name>64 Bucket:</zone-name>
<zone-size>268</zone-size>
<count-limit>0</count-limit>
<used>33</used>
<free>9</free>
<zone-req>33</zone-req>
<zone-name>128 Bucket:</zone-name>
<zone-size>524</zone-size>
<count-limit>0</count-limit>
<used>49</used>
<free>0</free>
<zone-req>49</zone-req>
<zone-name>VM OBJECT:</zone-name>
<zone-size>128</zone-size>
<count-limit>0</count-limit>
<used>2111</used>
<free>79</free>
<zone-req>25214</zone-req>
<zone-name>MAP:</zone-name>
<zone-size>160</zone-size>
<count-limit>0</count-limit>
<used>7</used>
<free>41</free>
<zone-req>7</zone-req>
<zone-name>KMAP ENTRY:</zone-name>
<zone-size>68</zone-size>
<count-limit>35336</count-limit>
<used>19</used>
<free>149</free>
<zone-req>2397</zone-req>
<zone-name>MAP ENTRY:</zone-name>
<zone-size>68</zone-size>
<count-limit>0</count-limit>
<used>2031</used>
<free>153</free>
<zone-req>62417</zone-req>
<zone-name>PV ENTRY:</zone-name>
```



```
<zone-size>24</zone-size>
<count-limit>509095</count-limit>
<used>57177</used>
<free>6333</free>
<zone-req>1033683</zone-req>
<zone-name>DP fakepg:</zone-name>
<zone-size>72</zone-size>
<count-limit>0</count-limit>
<used>0</used>
<free>0</free>
<zone-req>0</zone-req>
<zone-name>mt_zone:</zone-name>
<zone-size>64</zone-size>
<count-limit>0</count-limit>
<used>238</used>
<free>57</free>
<zone-req>238</zone-req>
<zone-name>16:</zone-name>
<zone-size>16</zone-size>
<count-limit>0</count-limit>
<used>2114</used>
<free>119</free>
<zone-req>80515</zone-req>
<zone-name>32:</zone-name>
<zone-size>32</zone-size>
<count-limit>0</count-limit>
<used>1335</used>
<free>134</free>
<zone-req>10259</zone-req>
<zone-name>64:</zone-name>
<zone-size>64</zone-size>
<count-limit>0</count-limit>
<used>3529</used>
<free>129</free>
<zone-req>29110</zone-req>
<zone-name>96:</zone-name>
<zone-size>96</zone-size>
<count-limit>0</count-limit>
<used>2062</used>
<free>58</free>
<zone-req>4365</zone-req>
<zone-name>112:</zone-name>
<zone-size>112</zone-size>
<count-limit>0</count-limit>
<used>361</used>
<free>164</free>
<zone-req>24613</zone-req>
<zone-name>128:</zone-name>
<zone-size>128</zone-size>
<count-limit>0</count-limit>
<used>359</used>
<free>61</free>
<zone-req>942</zone-req>
<zone-name>160:</zone-name>
<zone-size>160</zone-size>
<count-limit>0</count-limit>
<used>364</used>
<free>44</free>
<zone-req>577</zone-req>
<zone-name>224:</zone-name>
<zone-size>224</zone-size>
```

```
<count-limit>0</count-limit>
<used>422</used>
<free>20</free>
<zone-req>1950</zone-req>
<zone-name>256:</zone-name>
<zone-size>256</zone-size>
<count-limit>0</count-limit>
<used>204</used>
<free>36</free>
<zone-req>1225</zone-req>
<zone-name>288:</zone-name>
<zone-size>288</zone-size>
<count-limit>0</count-limit>
<used>2</used>
<free>24</free>
<zone-req>10</zone-req>
<zone-name>512:</zone-name>
<zone-size>512</zone-size>
<count-limit>0</count-limit>
<used>49</used>
<free>7</free>
<zone-req>911</zone-req>
<zone-name>1024:</zone-name>
<zone-size>1024</zone-size>
<count-limit>0</count-limit>
<used>213</used>
<free>11</free>
<zone-req>1076</zone-req>
<zone-name>2048:</zone-name>
<zone-size>2048</zone-size>
<count-limit>0</count-limit>
<used>199</used>
<free>113</free>
<zone-req>640</zone-req>
<zone-name>4096:</zone-name>
<zone-size>4096</zone-size>
<count-limit>0</count-limit>
<used>144</used>
<free>7</free>
<zone-req>2249</zone-req>
<zone-name>Files:</zone-name>
<zone-size>72</zone-size>
<count-limit>0</count-limit>
<used>665</used>
<free>77</free>
<zone-req>16457</zone-req>
<zone-name>MAC labels:</zone-name>
<zone-size>20</zone-size>
<count-limit>0</count-limit>
<used>3998</used>
<free>227</free>
<zone-req>21947</zone-req>
<zone-name>PROC:</zone-name>
<zone-size>544</zone-size>
<count-limit>0</count-limit>
<used>116</used>
<free>10</free>
<zone-req>1394</zone-req>
<zone-name>THREAD:</zone-name>
<zone-size>416</zone-size>
<count-limit>0</count-limit>
```



```
<used>127</used>
<free>17</free>
<zone-req>131</zone-req>
<zone-name>KSEGRP:</zone-name>
<zone-size>88</zone-size>
<count-limit>0</count-limit>
<used>127</used>
<free>73</free>
<zone-req>131</zone-req>
<zone-name>UPCALL:</zone-name>
<zone-size>44</zone-size>
<count-limit>0</count-limit>
<used>0</used>
<free>0</free>
<zone-req>0</zone-req>
<zone-name>SLEEPQUEUE:</zone-name>
<zone-size>32</zone-size>
<count-limit>0</count-limit>
<used>145</used>
<free>194</free>
<zone-req>145</zone-req>
<zone-name>VMSPACE:</zone-name>
<zone-size>268</zone-size>
<count-limit>0</count-limit>
<used>57</used>
<free>13</free>
<zone-req>1335</zone-req>
<zone-name>mbuf_packet:</zone-name>
<zone-size>256</zone-size>
<count-limit>180000</count-limit>
<used>256</used>
<free>128</free>
<zone-req>49791</zone-req>
<zone-name>mbuf:</zone-name>
<zone-size>256</zone-size>
<count-limit>180000</count-limit>
<used>50</used>
<free>466</free>
<zone-req>105183</zone-req>
<zone-name>mbuf_cluster:</zone-name>
<zone-size>2048</zone-size>
<count-limit>25190</count-limit>
<used>387</used>
<free>165</free>
<zone-req>5976</zone-req>
<zone-name>mbuf_jumbo_pagesize:</zone-name>
<zone-size>4096</zone-size>
<count-limit>0</count-limit>
<used>0</used>
<free>0</free>
<zone-req>0</zone-req>
<zone-name>mbuf_jumbo_9k:</zone-name>
<zone-size>9216</zone-size>
<count-limit>0</count-limit>
<used>0</used>
<free>0</free>
<zone-req>0</zone-req>
<zone-name>mbuf_jumbo_16k:</zone-name>
<zone-size>16384</zone-size>
<count-limit>0</count-limit>
<used>0</used>
```

```
<free>0</free>
<zone-req>0</zone-req>
<zone-name>ACL UMA zone:</zone-name>
<zone-size>388</zone-size>
<count-limit>0</count-limit>
<used>0</used>
<free>0</free>
<zone-req>0</zone-req>
<zone-name>g_bio:</zone-name>
<zone-size>132</zone-size>
<count-limit>0</count-limit>
<used>0</used>
<free>174</free>
<zone-req>69750</zone-req>
<zone-name>ata_request:</zone-name>
<zone-size>200</zone-size>
<count-limit>0</count-limit>
<used>0</used>
<free>57</free>
<zone-req>5030</zone-req>
<zone-name>ata_composite:</zone-name>
<zone-size>192</zone-size>
<count-limit>0</count-limit>
<used>0</used>
<free>0</free>
<zone-req>0</zone-req>
<zone-name>GENCFG:</zone-name>
<zone-size>72</zone-size>
<count-limit>1000004</count-limit>
<used>57</used>
<free>102</free>
<zone-req>57</zone-req>
<zone-name>VNODE:</zone-name>
<zone-size>292</zone-size>
<count-limit>0</count-limit>
<used>2718</used>
<free>25</free>
<zone-req>2922</zone-req>
<zone-name>VNODEPOLL:</zone-name>
<zone-size>72</zone-size>
<count-limit>0</count-limit>
<used>0</used>
<free>0</free>
<zone-req>0</zone-req>
<zone-name>S VFS Cache:</zone-name>
<zone-size>68</zone-size>
<count-limit>0</count-limit>
<used>2500</used>
<free>76</free>
<zone-req>3824</zone-req>
<zone-name>L VFS Cache:</zone-name>
<zone-size>291</zone-size>
<count-limit>0</count-limit>
<used>51</used>
<free>14</free>
<zone-req>63</zone-req>
<zone-name>NAMEI:</zone-name>
<zone-size>1024</zone-size>
<count-limit>0</count-limit>
<used>0</used>
<free>8</free>
```



```
<zone-req>53330</zone-req>
<zone-name>NFSMOUNT:</zone-name>
<zone-size>480</zone-size>
<count-limit>0</count-limit>
<used>0</used>
<free>0</free>
<zone-req>0</zone-req>
<zone-name>NFSNODE:</zone-name>
<zone-size>460</zone-size>
<count-limit>0</count-limit>
<used>0</used>
<free>0</free>
<zone-req>0</zone-req>
<zone-name>PIPE:</zone-name>
<zone-size>404</zone-size>
<count-limit>0</count-limit>
<used>27</used>
<free>9</free>
<zone-req>717</zone-req>
<zone-name>KNOTE:</zone-name>
<zone-size>72</zone-size>
<count-limit>0</count-limit>
<used>42</used>
<free>64</free>
<zone-req>3311</zone-req>
<zone-name>socket:</zone-name>
<zone-size>412</zone-size>
<count-limit>25191</count-limit>
<used>343</used>
<free>8</free>
<zone-req>2524</zone-req>
<zone-name>unpcb:</zone-name>
<zone-size>140</zone-size>
<count-limit>25200</count-limit>
<used>170</used>
<free>26</free>
<zone-req>2157</zone-req>
<zone-name>ipq:</zone-name>
<zone-size>52</zone-size>
<count-limit>216</count-limit>
<used>0</used>
<free>0</free>
<zone-req>0</zone-req>
<zone-name>udpcb:</zone-name>
<zone-size>232</zone-size>
<count-limit>25194</count-limit>
<used>19</used>
<free>32</free>
<zone-req>31</zone-req>
<zone-name>inpcb:</zone-name>
<zone-size>232</zone-size>
<count-limit>25194</count-limit>
<used>40</used>
<free>28</free>
<zone-req>105</zone-req>
<zone-name>tcpcb:</zone-name>
<zone-size>520</zone-size>
<count-limit>25193</count-limit>
<used>40</used>
<free>16</free>
<zone-req>105</zone-req>
```

```
        <zone-name>tcptw:</zone-name>
        <zone-size>56</zone-size>
        <count-limit>5092</count-limit>
        <used>0</used>
        <free>0</free>
        <zone-req>0</zone-req>
        <zone-name>syncache:</zone-name>
        <zone-size>128</zone-size>
        <count-limit>15360</count-limit>
        <used>0</used>
        <free>60</free>
        <zone-req>55</zone-req>
        <zone-name>tcpreass:</zone-name>
        <zone-size>20</zone-size>
        <count-limit>1690</count-limit>
        <used>0</used>
        <free>0</free>
        <zone-req>0</zone-req>
        <zone-name>sackhole:</zone-name>
        <zone-size>20</zone-size>
        <count-limit>0</count-limit>
        <used>0</used>
        <free>0</free>
        <zone-req>0</zone-req>
        <zone-name>ripcb:</zone-name>
        <zone-size>232</zone-size>
        <count-limit>25194</count-limit>
        <used>5</used>
        <free>29</free>
        <zone-req>5</zone-req>
        <zone-name>SWAPMETA:</zone-name>
        <zone-size>276</zone-size>
        <count-limit>94948</count-limit>
        <used>0</used>
        <free>0</free>
        <zone-req>0</zone-req>
        <zone-name>FFS inode:</zone-name>
        <zone-size>132</zone-size>
        <count-limit>0</count-limit>
        <used>1146</used>
        <free>72</free>
        <zone-req>1306</zone-req>
        <zone-name>FFS1 dinode:</zone-name>
        <zone-size>128</zone-size>
        <count-limit>0</count-limit>
        <used>1146</used>
        <free>24</free>
        <zone-req>1306</zone-req>
        <zone-name>FFS2 dinode:</zone-name>
        <zone-size>256</zone-size>
        <count-limit>0</count-limit>
        <used>0</used>
        <free>0</free>
        <zone-req>0</zone-req>
    </vmstat-memstat-zone>
    <vmstat-sumstat>
        <cpu-context-switch>934906</cpu-context-switch>
        <dev-intr>1707986</dev-intr>
        <soft-intr>33819</soft-intr>
        <traps>203604</traps>
        <sys-calls>1200636</sys-calls>
```



```
                <kernel-thrds>60</kernel-thrds>
                <fork-calls>1313</fork-calls>
                <vfork-calls>21</vfork-calls>
                <rfork-calls>0</rfork-calls>
                <swap-pageins>0</swap-pageins>
                <swap-pagedin>0</swap-pagedin>
                <swap-pageouts>0</swap-pageouts>
                <swap-pagedout>0</swap-pagedout>
                <vnode-pageins>23094</vnode-pageins>
                <vnode-pagedin>23119</vnode-pagedin>
                <vnode-pageouts>226</vnode-pageouts>
                <vnode-pagedout>3143</vnode-pagedout>
                <page-daemon-wakeup>0</page-daemon-wakeup>
                <page-daemon-examined-pages>0</page-daemon-examined-pages>
                <pages-reactivated>8821</pages-reactivated>
                <copy-on-write-faults>48364</copy-on-write-faults>
                <copy-on-write-optimized-faults>31</copy-on-write-optimized-faults>
                <zero-fill-pages-zeroed>74665</zero-fill-pages-zeroed>
                <zero-fill-pages-prezeroed>70061</zero-fill-pages-prezeroed>
                <transit-blocking-page-faults>85</transit-blocking-page-faults>
                <total-vm-faults>191824</total-vm-faults>

<pages-affected-by-kernel-thrd-creat>0</pages-affected-by-kernel-thrd-creat>
                <pages-affected-by-fork>95343</pages-affected-by-fork>
                <pages-affected-by-vfork>3526</pages-affected-by-vfork>
                <pages-affected-by-rfork>0</pages-affected-by-rfork>
                <pages-freed>221502</pages-freed>
                <pages-freed-by-deamon>0</pages-freed-by-deamon>
                <pages-freed-by-exiting-proc>75630</pages-freed-by-exiting-proc>
                <pages-active>45826</pages-active>
                <pages-inactive>13227</pages-inactive>
                <pages-in-vm-cache>49278</pages-in-vm-cache>
                <pages-wired-down>10640</pages-wired-down>
                <pages-free>70706</pages-free>
                <bytes-per-page>4096</bytes-per-page>
                <swap-pages-used>0</swap-pages-used>
                <peak-swap-pages-used>0</peak-swap-pages-used>
                <total-name-lookups>214496</total-name-lookups>
                <positive-cache-hits>92</positive-cache-hits>
                <negative-cache-hits>5</negative-cache-hits>
                <pass2>0</pass2>
                <cache-deletions>0</cache-deletions>
                <cache-falsehits>0</cache-falsehits>
                <toolong>0</toolong>
            </vmstat-sumstat>
            <vmstat-intr>
                <intr-name>irq0: clk          </intr-name>
                <intr-cnt>1243455</intr-cnt>
                <intr-rate>999</intr-rate>
                <intr-name>irq4: sio0         </intr-name>
                <intr-cnt>1140</intr-cnt>
                <intr-rate>0</intr-rate>
                <intr-name>irq8: rtc          </intr-name>
                <intr-cnt>159164</intr-cnt>
                <intr-rate>127</intr-rate>
                <intr-name>irq9: cbb1 fxp0    </intr-name>
                <intr-cnt>28490</intr-cnt>
                <intr-rate>22</intr-rate>
                <intr-name>irq10: fxp1        </intr-name>
                <intr-cnt>20593</intr-cnt>
                <intr-rate>16</intr-rate>
```

```
                <intr-name>irq14: ata0        </intr-name>
                <intr-cnt>5031</intr-cnt>
                <intr-rate>4</intr-rate>
                <intr-name>Total</intr-name>
                <intr-cnt>1457873</intr-cnt>
                <intr-rate>1171</intr-rate>
            </vmstat-intr>
            <vm-kernel-state>
                <vm-kmem-map-free>248524800</vm-kmem-map-free>
            </vm-kernel-state>
            <kernel-direct-mm-size-information>
                <vm-directmm-size-used>4644</vm-directmm-size-used>
                <vm-directmm-size-max>4057334</vm-directmm-size-max>
            </kernel-direct-mm-size-information>
        </system-virtual-memory-information>
        <cli>
            <banner></banner>
        </cli>
</rpc-reply>
```

Note: <kernel-direct-mm-size-information> only displays for 64 bit platform.

show system virtual-memory (QFX Series)

```
user@switch> show system virtual-memory | display xml
<rpc-reply xmlns:junos="http://xml.juniper.net/junos/11.1R1/junos">
    <system-virtual-memory-information>
        <vmstat-memstat-malloc>
            <memstat-name>CAM dev queue</memstat-name>
            <inuse>1</inuse>
            <memuse>1</memuse>
            <high-use>-</high-use>
            <memstat-req>1</memstat-req>
            <memstat-size>64</memstat-size>
            <memstat-name>entropy</memstat-name>
            <inuse>1024</inuse>
            <memuse>64</memuse>
            <high-use>-</high-use>
            <memstat-req>1024</memstat-req>
            <memstat-size>64</memstat-size>
            <memstat-name>linker</memstat-name>
            <inuse>481</inuse>
            <memuse>1871</memuse>
            <high-use>-</high-use>
            <memstat-req>1145</memstat-req>
            <memstat-size>16,32,64,4096,32768,131072</memstat-size>
            <memstat-name>lockf</memstat-name>
            <inuse>56</inuse>
            <memuse>4</memuse>
            <high-use>-</high-use>
            <memstat-req>5998</memstat-req>
            <memstat-size>64</memstat-size>
            <memstat-name>devbuf</memstat-name>
            <inuse>2094</inuse>
            <memuse>3877</memuse>
            <high-use>-</high-use>
            <memstat-req>2099</memstat-req>

<memstat-size>16,32,64,128,512,1024,4096,8192,16384,32768,65536,131072</memstat-size>

            <memstat-name>temp</memstat-name>
            <inuse>21</inuse>
            <memuse>66</memuse>
```

```
                <high-use>-</high-use>
                <memstat-req>3127</memstat-req>

<memstat-size>16,32,64,128,256,512,2048,4096,8192,16384,32768,65536,131072</memstat-size>

                <memstat-name>ip6ndp</memstat-name>
                <inuse>0</inuse>
                <memuse>0</memuse>
                <high-use>-</high-use>
                <memstat-req>4</memstat-req>
                <memstat-size>64</memstat-size>
                <memstat-name>in6ifmulti</memstat-name>
                <inuse>1</inuse>
                <memuse>1</memuse>
                <high-use>-</high-use>
                <memstat-req>1</memstat-req>
                <memstat-size>64</memstat-size>
                <memstat-name>in6grentry</memstat-name>
                <inuse>1</inuse>
                <memuse>1</memuse>
                <high-use>-</high-use>
                <memstat-req>1</memstat-req>
                <memstat-size>64</memstat-size>
                <memstat-name>iflogical</memstat-name>
                <inuse>13</inuse>
                <memuse>3</memuse>
                <high-use>-</high-use>
                <memstat-req>13</memstat-req>
                <memstat-size>64,2048</memstat-size>
                <memstat-name>iffamily</memstat-name>
                <inuse>28</inuse>
                <memuse>4</memuse>
                <high-use>-</high-use>
                <memstat-req>28</memstat-req>
                <memstat-size>32,1024,2048</memstat-size>
                <memstat-name>rtnexthop</memstat-name>
                <inuse>127</inuse>
                <memuse>18</memuse>
                <high-use>-</high-use>
                <memstat-req>129</memstat-req>
                <memstat-size>32,256,512,1024,2048,4096</memstat-size>
                <memstat-name>metrics</memstat-name>
                <inuse>3</inuse>
                <memuse>1</memuse>
                <high-use>-</high-use>
                <memstat-req>5</memstat-req>
                <memstat-size>256</memstat-size>
                <memstat-name>inifmulti</memstat-name>
                <inuse>3</inuse>
                <memuse>1</memuse>
                <high-use>-</high-use>
                <memstat-req>3</memstat-req>
                <memstat-size>64</memstat-size>
                <memstat-name>ingrentry</memstat-name>
                <inuse>6</inuse>
                <memuse>1</memuse>
                <high-use>-</high-use>
                <memstat-req>6</memstat-req>
                <memstat-size>64</memstat-size>
                <memstat-name>rnode</memstat-name>
                <inuse>68</inuse>
```

```
                <memuse>2</memuse>
                <high-use>-</high-use>
                <memstat-req>76</memstat-req>
                <memstat-size>16,32</memstat-size>
                <memstat-name>rcache</memstat-name>
                <inuse>4</inuse>
                <memuse>8</memuse>
                <high-use>-</high-use>
                <memstat-req>4</memstat-req>
                <memstat-size>65536</memstat-size>
                <memstat-name>ifdevice</memstat-name>
                <inuse>4</inuse>
                <memuse>1</memuse>
                <high-use>-</high-use>
                <memstat-req>4</memstat-req>
                <memstat-size>16</memstat-size>
                <memstat-name>ifstat</memstat-name>
                <inuse>40</inuse>
                <memuse>22</memuse>
                <high-use>-</high-use>
                <memstat-req>40</memstat-req>
                <memstat-size>512,16384,32768</memstat-size>
                <memstat-name>ipfw</memstat-name>
                <inuse>42</inuse>
                <memuse>23</memuse>
                <high-use>-</high-use>
                <memstat-req>91</memstat-req>

        <memstat-size>16,32,64,128,256,512,1024,16384,32768,65536,131072</memstat-size>
                <memstat-name>ifmaddr</memstat-name>
                <inuse>103</inuse>
                <memuse>3</memuse>
                <high-use>-</high-use>
                <memstat-req>103</memstat-req>
                <memstat-size>16,32</memstat-size>
                <memstat-name>rtable</memstat-name>
                <inuse>129</inuse>
                <memuse>14</memuse>
                <high-use>-</high-use>
                <memstat-req>139</memstat-req>
                <memstat-size>16,32,64,128,1024,16384</memstat-size>
                <memstat-name>sysctl</memstat-name>
                <inuse>0</inuse>
                <memuse>0</memuse>
                <high-use>-</high-use>
                <memstat-req>14847</memstat-req>
                <memstat-size>16,32,64,4096,16384,32768</memstat-size>
                <memstat-name>ifaddr</memstat-name>
                <inuse>29</inuse>
                <memuse>3</memuse>
                <high-use>-</high-use>
                <memstat-req>29</memstat-req>
                <memstat-size>64,128</memstat-size>
                <memstat-name>mkey</memstat-name>
                <inuse>345</inuse>
                <memuse>6</memuse>
                <high-use>-</high-use>
                <memstat-req>2527</memstat-req>
                <memstat-size>16,128</memstat-size>
                <memstat-name>pfe_ipc</memstat-name>
                <inuse>0</inuse>
```



```
            <memuse>0</memuse>
            <high-use>-</high-use>
            <memstat-req>1422</memstat-req>

<memstat-size>16,32,64,128,512,1024,2048,8192,16384,32768,65536,131072</memstat-size>

            <memstat-name>ifstate</memstat-name>
            <inuse>594</inuse>
            <memuse>51</memuse>
            <high-use>-</high-use>
            <memstat-req>655</memstat-req>

<memstat-size>16,32,64,128,256,1024,2048,4096,16384,32768</memstat-size>
            <memstat-name>itable16</memstat-name>
            <inuse>276</inuse>
            <memuse>52</memuse>
            <high-use>-</high-use>
            <memstat-req>294</memstat-req>
            <memstat-size>1024,4096</memstat-size>
            <memstat-name>itable32</memstat-name>
            <inuse>160</inuse>
            <memuse>10</memuse>
            <high-use>-</high-use>
            <memstat-req>160</memstat-req>
            <memstat-size>64</memstat-size>
            <memstat-name>itable64</memstat-name>
            <inuse>2</inuse>
            <memuse>1</memuse>
            <high-use>-</high-use>
            <memstat-req>2</memstat-req>
            <memstat-size>128</memstat-size>
            <memstat-name>lr</memstat-name>
            <inuse>1</inuse>
            <memuse>1</memuse>
            <high-use>-</high-use>
            <memstat-req>1</memstat-req>
            <memstat-size>16384</memstat-size>
            <memstat-name>pic</memstat-name>
            <inuse>5</inuse>
            <memuse>1</memuse>
            <high-use>-</high-use>
            <memstat-req>5</memstat-req>
            <memstat-size>64,512</memstat-size>
            <memstat-name>pfestat</memstat-name>
            <inuse>0</inuse>
            <memuse>0</memuse>
            <high-use>-</high-use>
            <memstat-req>162</memstat-req>
            <memstat-size>16,32,128,256,16384</memstat-size>
            <memstat-name>gencfg</memstat-name>
            <inuse>224</inuse>
            <memuse>56</memuse>
            <high-use>-</high-use>
            <memstat-req>540</memstat-req>
            <memstat-size>16,32,64,256,512,32768,65536</memstat-size>
            <memstat-name>jsr</memstat-name>
            <inuse>2</inuse>
            <memuse>1</memuse>
            <high-use>-</high-use>
            <memstat-req>4</memstat-req>
            <memstat-size>16</memstat-size>
```

```
  <memstat-name>idl</memstat-name>
  <inuse>0</inuse>
  <memuse>0</memuse>
  <high-use>-</high-use>
  <memstat-req>13</memstat-req>
<memstat-size>16,32,64,128,256,4096,16384,32768,131072</memstat-size>

  <memstat-name>rtsmsg</memstat-name>
  <inuse>0</inuse>
  <memuse>0</memuse>
  <high-use>-</high-use>
  <memstat-req>2</memstat-req>
  <memstat-size>131072</memstat-size>
  <memstat-name>module</memstat-name>
  <inuse>249</inuse>
  <memuse>16</memuse>
  <high-use>-</high-use>
  <memstat-req>249</memstat-req>
  <memstat-size>64,128</memstat-size>
  <memstat-name>mtx_pool</memstat-name>
  <inuse>1</inuse>
  <memuse>8</memuse>
  <high-use>-</high-use>
  <memstat-req>1</memstat-req>
  <memstat-size>64,128</memstat-size>
  <memstat-name>DEVFS3</memstat-name>
  <inuse>109</inuse>
  <memuse>12</memuse>
  <high-use>-</high-use>
  <memstat-req>117</memstat-req>
  <memstat-size>256</memstat-size>
  <memstat-name>DEVFS1</memstat-name>
  <inuse>102</inuse>
  <memuse>23</memuse>
  <high-use>-</high-use>
  <memstat-req>109</memstat-req>
  <memstat-size>2048</memstat-size>
  <memstat-name>pgrp</memstat-name>
  <inuse>12</inuse>
  <memuse>1</memuse>
  <high-use>-</high-use>
  <memstat-req>21</memstat-req>
  <memstat-size>64</memstat-size>
  <memstat-name>session</memstat-name>
  <inuse>8</inuse>
  <memuse>1</memuse>
  <high-use>-</high-use>
  <memstat-req>15</memstat-req>
  <memstat-size>512</memstat-size>
  <memstat-name>proc</memstat-name>
  <inuse>2</inuse>
  <memuse>1</memuse>
  <high-use>-</high-use>
  <memstat-req>2</memstat-req>
  <memstat-size>16384</memstat-size>
  <memstat-name>subproc</memstat-name>
  <inuse>244</inuse>
  <memuse>496</memuse>
  <high-use>-</high-use>
  <memstat-req>1522</memstat-req>
  <memstat-size>2048,131072</memstat-size>
```



```
                <memstat-name>cred</memstat-name>
                <inuse>30</inuse>
                <memuse>4</memuse>
                <high-use>-</high-use>
                <memstat-req>11409</memstat-req>
                <memstat-size>256</memstat-size>
                <memstat-name>plimit</memstat-name>
                <inuse>17</inuse>
                <memuse>4</memuse>
                <high-use>-</high-use>
                <memstat-req>133</memstat-req>
                <memstat-size>2048</memstat-size>
                <memstat-name>uidinfo</memstat-name>
                <inuse>3</inuse>
                <memuse>1</memuse>
                <high-use>-</high-use>
                <memstat-req>6</memstat-req>
                <memstat-size>32,512</memstat-size>
                <memstat-name>sysctloid</memstat-name>
                <inuse>1117</inuse>
                <memuse>34</memuse>
                <high-use>-</high-use>
                <memstat-req>1117</memstat-req>
                <memstat-size>16,32,64</memstat-size>
                <memstat-name>sysctltmp</memstat-name>
                <inuse>0</inuse>
                <memuse>0</memuse>
                <high-use>-</high-use>
                <memstat-req>743</memstat-req>
                <memstat-size>16,32,64,1024</memstat-size>
                <memstat-name>umtx</memstat-name>
                <inuse>144</inuse>
                <memuse>9</memuse>
                <high-use>-</high-use>
                <memstat-req>144</memstat-req>
                <memstat-size>64</memstat-size>
                <memstat-name>SWAP</memstat-name>
                <inuse>2</inuse>
                <memuse>209</memuse>
                <high-use>-</high-use>
                <memstat-req>2</memstat-req>
                <memstat-size>64</memstat-size>
                <memstat-name>bus</memstat-name>
                <inuse>496</inuse>
                <memuse>55</memuse>
                <high-use>-</high-use>
                <memstat-req>1196</memstat-req>
                <memstat-size>16,32,64,128,32768</memstat-size>
                <memstat-name>bus-sc</memstat-name>
                <inuse>23</inuse>
                <memuse>33</memuse>
                <high-use>-</high-use>
                <memstat-req>335</memstat-req>

<memstat-size>16,32,64,512,1024,2048,8192,16384,65536,131072</memstat-size>
                <memstat-name>devstat</memstat-name>
                <inuse>10</inuse>
                <memuse>21</memuse>
                <high-use>-</high-use>
                <memstat-req>10</memstat-req>
                <memstat-size>16,131072</memstat-size>
```

```
<memstat-name>eventhandler</memstat-name>
<inuse>35</inuse>
<memuse>2</memuse>
<high-use>-</high-use>
<memstat-req>36</memstat-req>
<memstat-size>32,128</memstat-size>
<memstat-name>kobj</memstat-name>
<inuse>93</inuse>
<memuse>186</memuse>
<high-use>-</high-use>
<memstat-req>111</memstat-req>
<memstat-size>65536</memstat-size>
<memstat-name>DEVFS</memstat-name>
<inuse>8</inuse>
<memuse>1</memuse>
<high-use>-</high-use>
<memstat-req>9</memstat-req>
<memstat-size>16,64</memstat-size>
<memstat-name>rman</memstat-name>
<inuse>71</inuse>
<memuse>5</memuse>
<high-use>-</high-use>
<memstat-req>433</memstat-req>
<memstat-size>16,32,64</memstat-size>
<memstat-name>sbuf</memstat-name>
<inuse>0</inuse>
<memuse>0</memuse>
<high-use>-</high-use>
<memstat-req>522</memstat-req>
<memstat-size>16,32,32768,131072</memstat-size>
<memstat-name>NULLFS hash</memstat-name>
<inuse>1</inuse>
<memuse>1</memuse>
<high-use>-</high-use>
<memstat-req>1</memstat-req>
<memstat-size>64</memstat-size>
<memstat-name>taskqueue</memstat-name>
<inuse>5</inuse>
<memuse>1</memuse>
<high-use>-</high-use>
<memstat-req>5</memstat-req>
<memstat-size>64</memstat-size>
<memstat-name>turnstiles</memstat-name>
<inuse>145</inuse>
<memuse>10</memuse>
<high-use>-</high-use>
<memstat-req>145</memstat-req>
<memstat-size>64</memstat-size>
<memstat-name>Unitno</memstat-name>
<inuse>8</inuse>
<memuse>1</memuse>
<high-use>-</high-use>
<memstat-req>44</memstat-req>
<memstat-size>16,64</memstat-size>
<memstat-name>ioctlops</memstat-name>
<inuse>0</inuse>
<memuse>0</memuse>
<high-use>-</high-use>
<memstat-req>27622</memstat-req>
<memstat-size>16,64,8192,16384,131072</memstat-size>
<memstat-name>iov</memstat-name>
```



```
                <inuse>0</inuse>
                <memuse>0</memuse>
                <high-use>-</high-use>
                <memstat-req>18578</memstat-req>
                <memstat-size>16,64,128,256,512,1024,2048,131072</memstat-size>
                <memstat-name>msg</memstat-name>
                <inuse>4</inuse>
                <memuse>25</memuse>
                <high-use>-</high-use>
                <memstat-req>4</memstat-req>
                <memstat-size>32768,131072</memstat-size>
                <memstat-name>sem</memstat-name>
                <inuse>4</inuse>
                <memuse>7</memuse>
                <high-use>-</high-use>
                <memstat-req>4</memstat-req>
                <memstat-size>16384,32768,131072</memstat-size>
                <memstat-name>shm</memstat-name>
                <inuse>9</inuse>
                <memuse>20</memuse>
                <high-use>-</high-use>
                <memstat-req>14</memstat-req>
                <memstat-size>32768</memstat-size>
                <memstat-name>ttys</memstat-name>
                <inuse>321</inuse>
                <memuse>61</memuse>
                <high-use>-</high-use>
                <memstat-req>528</memstat-req>
                <memstat-size>512,32768</memstat-size>
                <memstat-name>ptys</memstat-name>
                <inuse>1</inuse>
                <memuse>1</memuse>
                <high-use>-</high-use>
                <memstat-req>1</memstat-req>
                <memstat-size>128</memstat-size>
                <memstat-name>mbuf_tag</memstat-name>
                <inuse>0</inuse>
                <memuse>0</memuse>
                <high-use>-</high-use>
                <memstat-req>23383</memstat-req>
                <memstat-size>16</memstat-size>
                <memstat-name>soname</memstat-name>
                <inuse>115</inuse>
                <memuse>12</memuse>
                <high-use>-</high-use>
                <memstat-req>24712</memstat-req>
                <memstat-size>16,32,64,256</memstat-size>
                <memstat-name>pcb</memstat-name>
                <inuse>216</inuse>
                <memuse>33</memuse>
                <high-use>-</high-use>
                <memstat-req>484</memstat-req>

<memstat-size>16,32,64,128,1024,2048,4096,16384,32768,65536</memstat-size>
                <memstat-name>BIO buffer</memstat-name>
                <inuse>43</inuse>
                <memuse>86</memuse>
                <high-use>-</high-use>
                <memstat-req>405</memstat-req>
                <memstat-size>65536</memstat-size>
                <memstat-name>vfscache</memstat-name>
```

```
<inuse>1</inuse>
<memuse>256</memuse>
<high-use>-</high-use>
<memstat-req>1</memstat-req>
<memstat-size>65536</memstat-size>
<memstat-name>cluster_save buffer</memstat-name>
<inuse>0</inuse>
<memuse>0</memuse>
<high-use>-</high-use>
<memstat-req>2</memstat-req>
<memstat-size>32,64</memstat-size>
<memstat-name>VFS hash</memstat-name>
<inuse>1</inuse>
<memuse>128</memuse>
<high-use>-</high-use>
<memstat-req>1</memstat-req>
<memstat-size>32,64</memstat-size>
<memstat-name>vnodes</memstat-name>
<inuse>1</inuse>
<memuse>1</memuse>
<high-use>-</high-use>
<memstat-req>1</memstat-req>
<memstat-size>512</memstat-size>
<memstat-name>mount</memstat-name>
<inuse>290</inuse>
<memuse>23</memuse>
<high-use>-</high-use>
<memstat-req>535</memstat-req>
<memstat-size>16,32,64,128,256,4096,32768</memstat-size>
<memstat-name>vnodemarker</memstat-name>
<inuse>0</inuse>
<memuse>0</memuse>
<high-use>-</high-use>
<memstat-req>498</memstat-req>
<memstat-size>16384</memstat-size>
<memstat-name>pfs_nodes</memstat-name>
<inuse>25</inuse>
<memuse>3</memuse>
<high-use>-</high-use>
<memstat-req>25</memstat-req>
<memstat-size>128</memstat-size>
<memstat-name>pfs_vncache</memstat-name>
<inuse>27</inuse>
<memuse>1</memuse>
<high-use>-</high-use>
<memstat-req>53</memstat-req>
<memstat-size>32</memstat-size>
<memstat-name>STP</memstat-name>
<inuse>1</inuse>
<memuse>1</memuse>
<high-use>-</high-use>
<memstat-req>1</memstat-req>
<memstat-size>64</memstat-size>
<memstat-name>GEOM</memstat-name>
<inuse>146</inuse>
<memuse>11</memuse>
<high-use>-</high-use>
<memstat-req>1042</memstat-req>

<memstat-size>16,32,64,128,256,512,2048,16384,32768,131072</memstat-size>
<memstat-name>syncache</memstat-name>
```

```
            <inuse>1</inuse>
            <memuse>8</memuse>
            <high-use>-</high-use>
            <memstat-req>1</memstat-req>

<memstat-size>16,32,64,128,256,512,2048,16384,32768,131072</memstat-size>
            <memstat-name>tlv_stat</memstat-name>
            <inuse>0</inuse>
            <memuse>0</memuse>
            <high-use>-</high-use>
            <memstat-req>8</memstat-req>

<memstat-size>16,32,64,128,256,512,2048,16384,32768,131072</memstat-size>
            <memstat-name>NFS daemon</memstat-name>
            <inuse>1</inuse>
            <memuse>8</memuse>
            <high-use>-</high-use>
            <memstat-req>1</memstat-req>

<memstat-size>16,32,64,128,256,512,2048,16384,32768,131072</memstat-size>
            <memstat-name>p1003.1b</memstat-name>
            <inuse>1</inuse>
            <memuse>1</memuse>
            <high-use>-</high-use>
            <memstat-req>1</memstat-req>
            <memstat-size>16</memstat-size>
            <memstat-name>MD disk</memstat-name>
            <inuse>10</inuse>
            <memuse>20</memuse>
            <high-use>-</high-use>
            <memstat-req>10</memstat-req>
            <memstat-size>65536</memstat-size>
            <memstat-name>ata_generic</memstat-name>
            <inuse>1</inuse>
            <memuse>1</memuse>
            <high-use>-</high-use>
            <memstat-req>6</memstat-req>
            <memstat-size>16,16384,32768</memstat-size>
            <memstat-name>ISOFS mount</memstat-name>
            <inuse>8</inuse>
            <memuse>1</memuse>
            <high-use>-</high-use>
            <memstat-req>15</memstat-req>
            <memstat-size>512</memstat-size>
            <memstat-name>ISOFS node</memstat-name>
            <inuse>1440</inuse>
            <memuse>135</memuse>
            <high-use>-</high-use>
            <memstat-req>1457</memstat-req>
            <memstat-size>128</memstat-size>
            <memstat-name>CAM SIM</memstat-name>
            <inuse>1</inuse>
            <memuse>1</memuse>
            <high-use>-</high-use>
            <memstat-req>1</memstat-req>
            <memstat-size>64</memstat-size>
            <memstat-name>CAM XPT</memstat-name>
            <inuse>6</inuse>
            <memuse>1</memuse>
            <high-use>-</high-use>
            <memstat-req>9</memstat-req>
```

```
<memstat-size>16,64,16384</memstat-size>
<memstat-name>CAM periph</memstat-name>
<inuse>1</inuse>
<memuse>1</memuse>
<high-use>-</high-use>
<memstat-req>1</memstat-req>
<memstat-size>128</memstat-size>
<memstat-name>ad_driver</memstat-name>
<inuse>1</inuse>
<memuse>1</memuse>
<high-use>-</high-use>
<memstat-req>1</memstat-req>
<memstat-size>256</memstat-size>
<memstat-name>pagedep</memstat-name>
<inuse>1</inuse>
<memuse>32</memuse>
<high-use>-</high-use>
<memstat-req>106</memstat-req>
<memstat-size>64</memstat-size>
<memstat-name>inodedep</memstat-name>
<inuse>1</inuse>
<memuse>128</memuse>
<high-use>-</high-use>
<memstat-req>464</memstat-req>
<memstat-size>256</memstat-size>
<memstat-name>newblk</memstat-name>
<inuse>1</inuse>
<memuse>1</memuse>
<high-use>-</high-use>
<memstat-req>336</memstat-req>
<memstat-size>64,4096</memstat-size>
<memstat-name>bmsafemap</memstat-name>
<inuse>0</inuse>
<memuse>0</memuse>
<high-use>-</high-use>
<memstat-req>63</memstat-req>
<memstat-size>64</memstat-size>
<memstat-name>allocdirect</memstat-name>
<inuse>0</inuse>
<memuse>0</memuse>
<high-use>-</high-use>
<memstat-req>320</memstat-req>
<memstat-size>128</memstat-size>
<memstat-name>indirdep</memstat-name>
<inuse>0</inuse>
<memuse>0</memuse>
<high-use>-</high-use>
<memstat-req>17</memstat-req>
<memstat-size>32</memstat-size>
<memstat-name>allocindir</memstat-name>
<inuse>0</inuse>
<memuse>0</memuse>
<high-use>-</high-use>
<memstat-req>15</memstat-req>
<memstat-size>64</memstat-size>
<memstat-name>freefrag</memstat-name>
<inuse>0</inuse>
<memuse>0</memuse>
<high-use>-</high-use>
<memstat-req>12</memstat-req>
<memstat-size>32</memstat-size>
```



```
<memstat-name>freeblks</memstat-name>
<inuse>0</inuse>
<memuse>0</memuse>
<high-use>-</high-use>
<memstat-req>40</memstat-req>
<memstat-size>2048</memstat-size>
<memstat-name>freefile</memstat-name>
<inuse>0</inuse>
<memuse>0</memuse>
<high-use>-</high-use>
<memstat-req>101</memstat-req>
<memstat-size>32</memstat-size>
<memstat-name>diradd</memstat-name>
<inuse>0</inuse>
<memuse>0</memuse>
<high-use>-</high-use>
<memstat-req>465</memstat-req>
<memstat-size>64</memstat-size>
<memstat-name>mkdir</memstat-name>
<inuse>0</inuse>
<memuse>0</memuse>
<high-use>-</high-use>
<memstat-req>136</memstat-req>
<memstat-size>32</memstat-size>
<memstat-name>dirrem</memstat-name>
<inuse>0</inuse>
<memuse>0</memuse>
<high-use>-</high-use>
<memstat-req>168</memstat-req>
<memstat-size>32</memstat-size>
<memstat-name>newdirblk</memstat-name>
<inuse>0</inuse>
<memuse>0</memuse>
<high-use>-</high-use>
<memstat-req>1</memstat-req>
<memstat-size>32</memstat-size>
<memstat-name>savedino</memstat-name>
<inuse>0</inuse>
<memuse>0</memuse>
<high-use>-</high-use>
<memstat-req>157</memstat-req>
<memstat-size>512</memstat-size>
<memstat-name>UFS mount</memstat-name>
<inuse>15</inuse>
<memuse>36</memuse>
<high-use>-</high-use>
<memstat-req>15</memstat-req>
<memstat-size>2048,65536,131072</memstat-size>
<memstat-name>ata_dma</memstat-name>
<inuse>2</inuse>
<memuse>1</memuse>
<high-use>-</high-use>
<memstat-req>2</memstat-req>
<memstat-size>256</memstat-size>
<memstat-name>UMAHash</memstat-name>
<inuse>1</inuse>
<memuse>2</memuse>
<high-use>-</high-use>
<memstat-req>4</memstat-req>
<memstat-size>4096,16384,32768,65536</memstat-size>
<memstat-name>cdev</memstat-name>
```

```
<inuse>22</inuse>
<memuse>3</memuse>
<high-use>-</high-use>
<memstat-req>22</memstat-req>
<memstat-size>256</memstat-size>
<memstat-name>file desc</memstat-name>
<inuse>141</inuse>
<memuse>32</memuse>
<high-use>-</high-use>
<memstat-req>1583</memstat-req>
<memstat-size>16,1024,2048,16384</memstat-size>
<memstat-name>VM pgdata</memstat-name>
<inuse>2</inuse>
<memuse>65</memuse>
<high-use>-</high-use>
<memstat-req>2</memstat-req>
<memstat-size>64</memstat-size>
<memstat-name>sigio</memstat-name>
<inuse>1</inuse>
<memuse>1</memuse>
<high-use>-</high-use>
<memstat-req>20</memstat-req>
<memstat-size>32</memstat-size>
<memstat-name>kenv</memstat-name>
<inuse>24</inuse>
<memuse>5</memuse>
<high-use>-</high-use>
<memstat-req>27</memstat-req>
<memstat-size>16,32,64,131072</memstat-size>
<memstat-name>atkbddev</memstat-name>
<inuse>2</inuse>
<memuse>1</memuse>
<high-use>-</high-use>
<memstat-req>2</memstat-req>
<memstat-size>32</memstat-size>
<memstat-name>kqueue</memstat-name>
<inuse>15</inuse>
<memuse>9</memuse>
<high-use>-</high-use>
<memstat-req>19</memstat-req>
<memstat-size>1024,4096,32768</memstat-size>
<memstat-name>proc-args</memstat-name>
<inuse>57</inuse>
<memuse>3</memuse>
<high-use>-</high-use>
<memstat-req>1001</memstat-req>
<memstat-size>16,32,64,128,256,512,1024</memstat-size>
<memstat-name>isadev</memstat-name>
<inuse>21</inuse>
<memuse>2</memuse>
<high-use>-</high-use>
<memstat-req>21</memstat-req>
<memstat-size>64</memstat-size>
<memstat-name>zombie</memstat-name>
<inuse>0</inuse>
<memuse>0</memuse>
<high-use>-</high-use>
<memstat-req>1278</memstat-req>
<memstat-size>128</memstat-size>
<memstat-name>ithread</memstat-name>
<inuse>69</inuse>
```



```
        <memuse>5</memuse>
        <high-use>-</high-use>
        <memstat-req>69</memstat-req>
        <memstat-size>16,64,256</memstat-size>
        <memstat-name>legacydrv</memstat-name>
        <inuse>4</inuse>
        <memuse>1</memuse>
        <high-use>-</high-use>
        <memstat-req>4</memstat-req>
        <memstat-size>16</memstat-size>
        <memstat-name>memdesc</memstat-name>
        <inuse>1</inuse>
        <memuse>4</memuse>
        <high-use>-</high-use>
        <memstat-req>1</memstat-req>
        <memstat-size>131072</memstat-size>
        <memstat-name>nexusdev</memstat-name>
        <inuse>2</inuse>
        <memuse>1</memuse>
        <high-use>-</high-use>
        <memstat-req>2</memstat-req>
        <memstat-size>16</memstat-size>
        <memstat-name>CAM queue</memstat-name>
        <inuse>3</inuse>
        <memuse>1</memuse>
        <high-use>-</high-use>
        <memstat-req>3</memstat-req>
        <memstat-size>16</memstat-size>
        <memstat-name>$PIR</memstat-name>
        <inuse>4</inuse>
        <memuse>1</memuse>
        <high-use>-</high-use>
        <memstat-req>4</memstat-req>
        <memstat-size>32</memstat-size>
        <memstat-name>KTRACE</memstat-name>
        <inuse>100</inuse>
        <memuse>10</memuse>
        <high-use>-</high-use>
        <memstat-req>100</memstat-req>
        <memstat-size>128</memstat-size>
        <memstat-name>kbdmux</memstat-name>
        <inuse>5</inuse>
        <memuse>9</memuse>
        <high-use>-</high-use>
        <memstat-req>5</memstat-req>
        <memstat-size>128,2048,65536,131072</memstat-size>
    </vmstat-memstat-malloc>
    <vmstat-memstat-zone>
        <zone-name>UMA Kegs:</zone-name>
        <zone-size>136</zone-size>
        <count-limit>0</count-limit>
        <used>71</used>
        <free>1</free>
        <zone-req>71</zone-req>
        <zone-name>UMA Zones:</zone-name>
        <zone-size>120</zone-size>
        <count-limit>0</count-limit>
        <used>71</used>
        <free>19</free>
        <zone-req>71</zone-req>
        <zone-name>UMA Slabs:</zone-name>
```

```
<zone-size>64</zone-size>
<count-limit>0</count-limit>
<used>490</used>
<free>41</free>
<zone-req>579</zone-req>
<zone-name>UMA RCntSlabs:</zone-name>
<zone-size>104</zone-size>
<count-limit>0</count-limit>
<used>276</used>
<free>20</free>
<zone-req>276</zone-req>
<zone-name>UMA Hash:</zone-name>
<zone-size>128</zone-size>
<count-limit>0</count-limit>
<used>4</used>
<free>26</free>
<zone-req>5</zone-req>
<zone-name>16 Bucket:</zone-name>
<zone-size>76</zone-size>
<count-limit>0</count-limit>
<used>30</used>
<free>20</free>
<zone-req>30</zone-req>
<zone-name>32 Bucket:</zone-name>
<zone-size>140</zone-size>
<count-limit>0</count-limit>
<used>33</used>
<free>23</free>
<zone-req>33</zone-req>
<zone-name>64 Bucket:</zone-name>
<zone-size>268</zone-size>
<count-limit>0</count-limit>
<used>33</used>
<free>9</free>
<zone-req>33</zone-req>
<zone-name>128 Bucket:</zone-name>
<zone-size>524</zone-size>
<count-limit>0</count-limit>
<used>49</used>
<free>0</free>
<zone-req>49</zone-req>
<zone-name>VM OBJECT:</zone-name>
<zone-size>128</zone-size>
<count-limit>0</count-limit>
<used>2111</used>
<free>79</free>
<zone-req>25214</zone-req>
<zone-name>MAP:</zone-name>
<zone-size>160</zone-size>
<count-limit>0</count-limit>
<used>7</used>
<free>41</free>
<zone-req>7</zone-req>
<zone-name>KMAP ENTRY:</zone-name>
<zone-size>68</zone-size>
<count-limit>35336</count-limit>
<used>19</used>
<free>149</free>
<zone-req>2397</zone-req>
<zone-name>MAP ENTRY:</zone-name>
<zone-size>68</zone-size>
```



```
<count-limit>0</count-limit>
<used>2031</used>
<free>153</free>
<zone-req>62417</zone-req>
<zone-name>PV ENTRY:</zone-name>
<zone-size>24</zone-size>
<count-limit>509095</count-limit>
<used>57177</used>
<free>6333</free>
<zone-req>1033683</zone-req>
<zone-name>DP fakepg:</zone-name>
<zone-size>72</zone-size>
<count-limit>0</count-limit>
<used>0</used>
<free>0</free>
<zone-req>0</zone-req>
<zone-name>mt_zone:</zone-name>
<zone-size>64</zone-size>
<count-limit>0</count-limit>
<used>238</used>
<free>57</free>
<zone-req>238</zone-req>
<zone-name>16:</zone-name>
<zone-size>16</zone-size>
<count-limit>0</count-limit>
<used>2114</used>
<free>119</free>
<zone-req>80515</zone-req>
<zone-name>32:</zone-name>
<zone-size>32</zone-size>
<count-limit>0</count-limit>
<used>1335</used>
<free>134</free>
<zone-req>10259</zone-req>
<zone-name>64:</zone-name>
<zone-size>64</zone-size>
<count-limit>0</count-limit>
<used>3529</used>
<free>129</free>
<zone-req>29110</zone-req>
<zone-name>96:</zone-name>
<zone-size>96</zone-size>
<count-limit>0</count-limit>
<used>2062</used>
<free>58</free>
<zone-req>4365</zone-req>
<zone-name>112:</zone-name>
<zone-size>112</zone-size>
<count-limit>0</count-limit>
<used>361</used>
<free>164</free>
<zone-req>24613</zone-req>
<zone-name>128:</zone-name>
<zone-size>128</zone-size>
<count-limit>0</count-limit>
<used>359</used>
<free>61</free>
<zone-req>942</zone-req>
<zone-name>160:</zone-name>
<zone-size>160</zone-size>
<count-limit>0</count-limit>
```

```
<used>364</used>
<free>44</free>
<zone-req>577</zone-req>
<zone-name>224:</zone-name>
<zone-size>224</zone-size>
<count-limit>0</count-limit>
<used>422</used>
<free>20</free>
<zone-req>1950</zone-req>
<zone-name>256:</zone-name>
<zone-size>256</zone-size>
<count-limit>0</count-limit>
<used>204</used>
<free>36</free>
<zone-req>1225</zone-req>
<zone-name>288:</zone-name>
<zone-size>288</zone-size>
<count-limit>0</count-limit>
<used>2</used>
<free>24</free>
<zone-req>10</zone-req>
<zone-name>512:</zone-name>
<zone-size>512</zone-size>
<count-limit>0</count-limit>
<used>49</used>
<free>7</free>
<zone-req>911</zone-req>
<zone-name>1024:</zone-name>
<zone-size>1024</zone-size>
<count-limit>0</count-limit>
<used>213</used>
<free>11</free>
<zone-req>1076</zone-req>
<zone-name>2048:</zone-name>
<zone-size>2048</zone-size>
<count-limit>0</count-limit>
<used>199</used>
<free>113</free>
<zone-req>640</zone-req>
<zone-name>4096:</zone-name>
<zone-size>4096</zone-size>
<count-limit>0</count-limit>
<used>144</used>
<free>7</free>
<zone-req>2249</zone-req>
<zone-name>Files:</zone-name>
<zone-size>72</zone-size>
<count-limit>0</count-limit>
<used>665</used>
<free>77</free>
<zone-req>16457</zone-req>
<zone-name>MAC labels:</zone-name>
<zone-size>20</zone-size>
<count-limit>0</count-limit>
<used>3998</used>
<free>227</free>
<zone-req>21947</zone-req>
<zone-name>PROC:</zone-name>
<zone-size>544</zone-size>
<count-limit>0</count-limit>
<used>116</used>
```



```
<free>10</free>
<zone-req>1394</zone-req>
<zone-name>THREAD:</zone-name>
<zone-size>416</zone-size>
<count-limit>0</count-limit>
<used>127</used>
<free>17</free>
<zone-req>131</zone-req>
<zone-name>KSEGRP:</zone-name>
<zone-size>88</zone-size>
<count-limit>0</count-limit>
<used>127</used>
<free>73</free>
<zone-req>131</zone-req>
<zone-name>UPCALL:</zone-name>
<zone-size>44</zone-size>
<count-limit>0</count-limit>
<used>0</used>
<free>0</free>
<zone-req>0</zone-req>
<zone-name>SLEEPQUEUE:</zone-name>
<zone-size>32</zone-size>
<count-limit>0</count-limit>
<used>145</used>
<free>194</free>
<zone-req>145</zone-req>
<zone-name>VMSPACE:</zone-name>
<zone-size>268</zone-size>
<count-limit>0</count-limit>
<used>57</used>
<free>13</free>
<zone-req>1335</zone-req>
<zone-name>mbuf_packet:</zone-name>
<zone-size>256</zone-size>
<count-limit>180000</count-limit>
<used>256</used>
<free>128</free>
<zone-req>49791</zone-req>
<zone-name>mbuf:</zone-name>
<zone-size>256</zone-size>
<count-limit>180000</count-limit>
<used>50</used>
<free>466</free>
<zone-req>105183</zone-req>
<zone-name>mbuf_cluster:</zone-name>
<zone-size>2048</zone-size>
<count-limit>25190</count-limit>
<used>387</used>
<free>165</free>
<zone-req>5976</zone-req>
<zone-name>mbuf_jumbo_pagesize:</zone-name>
<zone-size>4096</zone-size>
<count-limit>0</count-limit>
<used>0</used>
<free>0</free>
<zone-req>0</zone-req>
<zone-name>mbuf_jumbo_9k:</zone-name>
<zone-size>9216</zone-size>
<count-limit>0</count-limit>
<used>0</used>
<free>0</free>
```

```
<zone-req>0</zone-req>
<zone-name>mbuf_jumbo_16k:</zone-name>
<zone-size>16384</zone-size>
<count-limit>0</count-limit>
<used>0</used>
<free>0</free>
<zone-req>0</zone-req>
<zone-name>ACL UMA zone:</zone-name>
<zone-size>388</zone-size>
<count-limit>0</count-limit>
<used>0</used>
<free>0</free>
<zone-req>0</zone-req>
<zone-name>g_bio:</zone-name>
<zone-size>132</zone-size>
<count-limit>0</count-limit>
<used>0</used>
<free>174</free>
<zone-req>69750</zone-req>
<zone-name>ata_request:</zone-name>
<zone-size>200</zone-size>
<count-limit>0</count-limit>
<used>0</used>
<free>57</free>
<zone-req>5030</zone-req>
<zone-name>ata_composite:</zone-name>
<zone-size>192</zone-size>
<count-limit>0</count-limit>
<used>0</used>
<free>0</free>
<zone-req>0</zone-req>
<zone-name>GENCFG:</zone-name>
<zone-size>72</zone-size>
<count-limit>1000004</count-limit>
<used>57</used>
<free>102</free>
<zone-req>57</zone-req>
<zone-name>VNODE:</zone-name>
<zone-size>292</zone-size>
<count-limit>0</count-limit>
<used>2718</used>
<free>25</free>
<zone-req>2922</zone-req>
<zone-name>VNODEPOLL:</zone-name>
<zone-size>72</zone-size>
<count-limit>0</count-limit>
<used>0</used>
<free>0</free>
<zone-req>0</zone-req>
<zone-name>S VFS Cache:</zone-name>
<zone-size>68</zone-size>
<count-limit>0</count-limit>
<used>2500</used>
<free>76</free>
<zone-req>3824</zone-req>
<zone-name>L VFS Cache:</zone-name>
<zone-size>291</zone-size>
<count-limit>0</count-limit>
<used>51</used>
<free>14</free>
<zone-req>63</zone-req>
```



```
<zone-name>NAMEI:</zone-name>
<zone-size>1024</zone-size>
<count-limit>0</count-limit>
<used>0</used>
<free>8</free>
<zone-req>53330</zone-req>
<zone-name>NFSMOUNT:</zone-name>
<zone-size>480</zone-size>
<count-limit>0</count-limit>
<used>0</used>
<free>0</free>
<zone-req>0</zone-req>
<zone-name>NFSNODE:</zone-name>
<zone-size>460</zone-size>
<count-limit>0</count-limit>
<used>0</used>
<free>0</free>
<zone-req>0</zone-req>
<zone-name>PIPE:</zone-name>
<zone-size>404</zone-size>
<count-limit>0</count-limit>
<used>27</used>
<free>9</free>
<zone-req>717</zone-req>
<zone-name>KNOTE:</zone-name>
<zone-size>72</zone-size>
<count-limit>0</count-limit>
<used>42</used>
<free>64</free>
<zone-req>3311</zone-req>
<zone-name>socket:</zone-name>
<zone-size>412</zone-size>
<count-limit>25191</count-limit>
<used>343</used>
<free>8</free>
<zone-req>2524</zone-req>
<zone-name>unpcb:</zone-name>
<zone-size>140</zone-size>
<count-limit>25200</count-limit>
<used>170</used>
<free>26</free>
<zone-req>2157</zone-req>
<zone-name>ipq:</zone-name>
<zone-size>52</zone-size>
<count-limit>216</count-limit>
<used>0</used>
<free>0</free>
<zone-req>0</zone-req>
<zone-name>udpcb:</zone-name>
<zone-size>232</zone-size>
<count-limit>25194</count-limit>
<used>19</used>
<free>32</free>
<zone-req>31</zone-req>
<zone-name>inpcb:</zone-name>
<zone-size>232</zone-size>
<count-limit>25194</count-limit>
<used>40</used>
<free>28</free>
<zone-req>105</zone-req>
<zone-name>tcpcb:</zone-name>
```

```
        <zone-size>520</zone-size>
        <count-limit>25193</count-limit>
        <used>40</used>
        <free>16</free>
        <zone-req>105</zone-req>
        <zone-name>tcptw:</zone-name>
        <zone-size>56</zone-size>
        <count-limit>5092</count-limit>
        <used>0</used>
        <free>0</free>
        <zone-req>0</zone-req>
        <zone-name>syncache:</zone-name>
        <zone-size>128</zone-size>
        <count-limit>15360</count-limit>
        <used>0</used>
        <free>60</free>
        <zone-req>55</zone-req>
        <zone-name>tcpreass:</zone-name>
        <zone-size>20</zone-size>
        <count-limit>1690</count-limit>
        <used>0</used>
        <free>0</free>
        <zone-req>0</zone-req>
        <zone-name>sackhole:</zone-name>
        <zone-size>20</zone-size>
        <count-limit>0</count-limit>
        <used>0</used>
        <free>0</free>
        <zone-req>0</zone-req>
        <zone-name>ripcb:</zone-name>
        <zone-size>232</zone-size>
        <count-limit>25194</count-limit>
        <used>5</used>
        <free>29</free>
        <zone-req>5</zone-req>
        <zone-name>SWAPMETA:</zone-name>
        <zone-size>276</zone-size>
        <count-limit>94948</count-limit>
        <used>0</used>
        <free>0</free>
        <zone-req>0</zone-req>
        <zone-name>FFS inode:</zone-name>
        <zone-size>132</zone-size>
        <count-limit>0</count-limit>
        <used>1146</used>
        <free>72</free>
        <zone-req>1306</zone-req>
        <zone-name>FFS1 dinode:</zone-name>
        <zone-size>128</zone-size>
        <count-limit>0</count-limit>
        <used>1146</used>
        <free>24</free>
        <zone-req>1306</zone-req>
        <zone-name>FFS2 dinode:</zone-name>
        <zone-size>256</zone-size>
        <count-limit>0</count-limit>
        <used>0</used>
        <free>0</free>
        <zone-req>0</zone-req>
    </vmstat-memstat-zone>
    <vmstat-sumstat>
```



```
                <cpu-context-switch>934906</cpu-context-switch>
                <dev-intr>1707986</dev-intr>
                <soft-intr>33819</soft-intr>
                <traps>203604</traps>
                <sys-calls>1200636</sys-calls>
                <kernel-thrds>60</kernel-thrds>
                <fork-calls>1313</fork-calls>
                <vfork-calls>21</vfork-calls>
                <rfork-calls>0</rfork-calls>
                <swap-pageins>0</swap-pageins>
                <swap-pagedin>0</swap-pagedin>
                <swap-pageouts>0</swap-pageouts>
                <swap-pagedout>0</swap-pagedout>
                <vnode-pageins>23094</vnode-pageins>
                <vnode-pagedin>23119</vnode-pagedin>
                <vnode-pageouts>226</vnode-pageouts>
                <vnode-pagedout>3143</vnode-pagedout>
                <page-daemon-wakeup>0</page-daemon-wakeup>
                <page-daemon-examined-pages>0</page-daemon-examined-pages>
                <pages-reactivated>8821</pages-reactivated>
                <copy-on-write-faults>48364</copy-on-write-faults>
                <copy-on-write-optimized-faults>31</copy-on-write-optimized-faults>
                <zero-fill-pages-zeroed>74665</zero-fill-pages-zeroed>
                <zero-fill-pages-prezeroed>70061</zero-fill-pages-prezeroed>
                <transit-blocking-page-faults>85</transit-blocking-page-faults>
                <total-vm-faults>191824</total-vm-faults>

<pages-affected-by-kernel-thrd-creat>0</pages-affected-by-kernel-thrd-creat>
                <pages-affected-by-fork>95343</pages-affected-by-fork>
                <pages-affected-by-vfork>3526</pages-affected-by-vfork>
                <pages-affected-by-rfork>0</pages-affected-by-rfork>
                <pages-freed>221502</pages-freed>
                <pages-freed-by-deamon>0</pages-freed-by-deamon>
                <pages-freed-by-exiting-proc>75630</pages-freed-by-exiting-proc>
                <pages-active>45826</pages-active>
                <pages-inactive>13227</pages-inactive>
                <pages-in-vm-cache>49278</pages-in-vm-cache>
                <pages-wired-down>10640</pages-wired-down>
                <pages-free>70706</pages-free>
                <bytes-per-page>4096</bytes-per-page>
                <swap-pages-used>0</swap-pages-used>
                <peak-swap-pages-used>0</peak-swap-pages-used>
                <total-name-lookups>214496</total-name-lookups>
                <positive-cache-hits>92</positive-cache-hits>
                <negative-cache-hits>5</negative-cache-hits>
                <pass2>0</pass2>
                <cache-deletions>0</cache-deletions>
                <cache-falsehits>0</cache-falsehits>
                <toolong>0</toolong>
            </vmstat-sumstat>
            <vmstat-intr>
                <intr-name>irq0: clk          </intr-name>
                <intr-cnt>1243455</intr-cnt>
                <intr-rate>999</intr-rate>
                <intr-name>irq4: sio0         </intr-name>
                <intr-cnt>1140</intr-cnt>
                <intr-rate>0</intr-rate>
                <intr-name>irq8: rtc          </intr-name>
                <intr-cnt>159164</intr-cnt>
                <intr-rate>127</intr-rate>
                <intr-name>irq9: cbb1 fxp0    </intr-name>
```

```
            <intr-cnt>28490</intr-cnt>
            <intr-rate>22</intr-rate>
            <intr-name>irq10: fxp1        </intr-name>
            <intr-cnt>20593</intr-cnt>
            <intr-rate>16</intr-rate>
            <intr-name>irq14: ata0        </intr-name>
            <intr-cnt>5031</intr-cnt>
            <intr-rate>4</intr-rate>
            <intr-name>Total</intr-name>
            <intr-cnt>1457873</intr-cnt>
            <intr-rate>1171</intr-rate>
        </vmstat-intr>
        <vm-kernel-state>
            <vm-kmem-map-free>248524800</vm-kmem-map-free>
        </vm-kernel-state>
    </system-virtual-memory-information>
    <cli>
        <banner></banner>
    </cli>
</rpc-reply>
```

show task

Syntax

show task
<logical-system (all | *logical-system-name*)>
<summary>
<*task-name*>
io
memory
replication
snooping

Release Information

Command introduced before Junos OS Release 7.4.

Description

Display routing protocol tasks on the Routing Engine.

Options

none—Display all routing protocol tasks on the Routing Engine.

logical-system (all | *logical-system-name*)—(Optional) Perform this operation on all logical systems or on a particular logical system.

summary—(Optional) Display summary information about running tasks.

task-name—(Optional) Display information about running tasks for all tasks whose name begins with this string (for example, **BGP_Group_69_153** and **BGP_Group_70_153** are both displayed when you run the **show task BGP_Group** command).

io—Show i/o statistics for all tasks displayed.

memory—Show memory statistics for all tasks displayed.

replication—Show only replication tasks.

snooping—Show only snooping tasks.

Required Privilege Level

view

Related Documentation

- show task io on page 401
- show task memory on page 403

List of Sample Output

show task on page 400

Output Fields

Table 16 on page 399 describes the output fields for the **show task** command. Output fields are listed in the approximate order in which they appear.

Table 16: show task Output Fields

Field Name	Field Description
Pri	Current priority of the process. A lower number indicates a higher priority.
Task Name	Name of the task.

Table 16: show task Output Fields *(continued)*

Field Name	Field Description
Pro	IP protocol number associated with the process.
Port	TCP or UDP port number associated with the task.
So	Socket number of the task.
Flags	Flags for the task: • **Accept**—Task is waiting for incoming connections. • **Connect**—Task is waiting for a connection to be completed. • **Delete**—Task has been deleted and is being cleaned up. • **LowPrio**—Task will be dispatched to read its socket after other higher-priority tasks.

Sample Output

show task

```
user@host> show task
Pri Task Name                           Pro  Port So Flags
 10 IF
 15 LABEL
 15 ISO
 15 INET                                            7
 20 Aggregate
 20 RT
 30 ICMP                                  1         9
 39 ISIS I/O                                       12
 40 IS-IS                                          10
 40 BGP RT Background                                  <LowPrio>
 40 BGP.0.0.0.0+179                           179 15 <Accept LowPrio>
 50 BGP_69.192.168.201.234+179                179 17 <LowPrio>
 50 BGP_70.192.168.201.233+179                179 16 <LowPrio>
 50 BGP_Group_69_153                                   <LowPrio>
 50 BGP_Group_70_153                                   <LowPrio>
 50 ASPaths
 60 KRT                                  255         1
 60 Redirect
 70 MGMT.local                                     14 <LowPrio>
 70 MGMT_Listen./var/run/rpd_mgmt                  13 <Accept LowPrio>
 70 SNMP Subagent./var/run/sub_rpd.sock             8 <LowPrio>
```

show task io

Syntax

show task io
<logical-system (all | *logical-system-name*)>

Syntax (EX Series Switches)

show task io

Release Information

Command introduced before Junos OS Release 7.4.
Command introduced in Junos OS Release 9.0 for EX Series switches.

Description

Display I/O statistics for routing protocol tasks on the Routing Engine.

Options

none—Display I/O statistics for routing protocol tasks on the Routing Engine.

logical-system (all | *logical-system-name*)—(Optional) Perform this operation on all logical systems or on a particular logical system.

Required Privilege Level

view

List of Sample Output

show task io on page 402

Output Fields

Table 17 on page 401 describes the output fields for the **show task io** command. Output fields are listed in the approximate order in which they appear.

Table 17: show task io Output Fields

Field Name	Field Description
Task Name	Name of the task.
Reads	Number of input ready notifications.
Writes	Number of output ready notifications.
Rcvd	Number of requests to the kernel for input.
Sent	Number of requests to the kernel for output.
Dropped	Number of sent requests that failed.

Sample Output

show task io

```
user@host> show task io
Task Name                          Reads  Writes    Rcvd    Sent Dropped
 LMP Client                            1       1       0       0       0
 IF                                    0       0       0       0       0
 INET6                                 0       0       0       0       0
 INET                                  0       0       0       0       0
 ISO                                   0       0       0       0       0
 Memory                                0       0       0       0       0
 RPD Unix Domain Server./var/ru        0       0       0       0       0
 RPD Unix Domain Server./var/ru        1       0       0       0       0
 RPD Unix Domain Server./var/ru        2       0       0       0       0
 RPD Server.0.0.0.0+666                0       0       0       0       0
 Aggregate                             0       0       0       0       0
 RT                                    0       0       0       0       0
 ICMP                                  0       0       0       0       0
 Router-Advertisement                  0       0       0       0       0
 ICMPv6                                0       0       0       0       0
 IS-IS I/O./var/run/ppmd_contro     1307       1       0       0       0
 l2vpn global task                     0       0       0       0       0
 IS-IS                                 0       0       0       0       0
 BFD I/O./var/run/bfdd_control      1307       1       0       0       0
 TED                                   0       0       0       0       0
 ASPaths                               0       0       0       0       0
 Resolve tree 1                        0       0       0       0       0
 KStat                                 0       0       0       0       0
 KRT Request                           0       0      63       0       0
 KRT Ifstate                         106       0     295       0       0
 KRT                                   0       0       0       0       0
 Redirect                              0       0       0       0       0
...
```

show task memory

Syntax

show task memory
<brief | detail | history | summary>
<logical-system (all | *logical-system-name*)>

Syntax (EX Series Switches)

show task memory
<brief | detail | history | summary>

Release Information

Command introduced before Junos OS Release 7.4.
Command introduced in Junos OS Release 9.0 for EX Series switches.

Description

Display memory utilization for routing protocol tasks on the Routing Engine.

Options

none—Display standard information about memory utilization for routing protocol tasks on the Routing Engine on all logical systems.

brief | detail | history | summary—(Optional) Display the specified level of output. Use the **history** option to display a history of memory utilization information.

logical-system (all | *logical-system-name*)—(Optional) Perform this operation on all logical systems or on a particular logical system.

Required Privilege Level

view

List of Sample Output

show task memory on page 405
show task memory detail on page 405

Output Fields

Table 18 on page 403 describes the output fields for the **show task memory** command. Output fields are listed in the approximate order in which they appear.

Table 18: show task memory Output Fields

Field Name	Field Description	Level of Output
Memory Currently In Use	Memory currently in use.	All levels
Memory Maximum Ever Used	Maximum memory ever used.	none specified, **brief**, **history**
Memory Available	Memory currently available.	none specified, **brief**
Size (kB)	Memory capacity in 1000-byte kilobytes.	none specified, **brief**, **history**, **summary**
Percentage	Percentage of memory currently available.	none specified, **brief**
When	Timestamp.	none specified, **brief**, **history**

Table 18: show task memory Output Fields *(continued)*

Field Name	Field Description	Level of Output
Overall Memory Report	Memory utilization by memory size: • **Size**—Block size, in bytes. • **TPT**—indicates transient memory, and P indicates full page. • **Allocs**—Number of blocks allocated for named objects. • **Mallocs**—Number of blocks allocated for anonymous objects. • **Alloc Bytes**—Number of blocks allocated times block size. • **MaxAllocs**—Maximum value of**Allocs**. • **MaxBytes**—Maximum value of **Alloc Bytes**. • ***FreeBytes***—Total number of bytes unused on memory pages for this block size.	**detail**
Allocator Memory Report	Memory utilization by named objects: • **Size**—Size of the named object in bytes. • **Alloc Size**—Actual memory used by that object in bytes. • **DTP**—indicates debug,**D T** indicates transient, and **P** indicates full page. • **Alloc Blocks**—Number of named objects allocated. • **AllocBytes**—Number of blocks allocated times block size. • **MaxAlloc Blocks**—Maximum value of **Alloc Blocks**. • **Max Alloc Bytes**—Maximum value of **AllocBytes**.	**detail**
Malloc Usage Report	Memory utilization for miscellaneous use: • **Allocs**—Number of allocations. • **Bytes**—Total bytes consumed. • **MaxAllocs**—Maximum value of **Allocs**. • **MaxBytes**—Maximum value of **Bytes**. • **FuncCalls**—Cumulative number of **Allocs**.	**detail**
Dynamically allocated memory	Memory allocated dynamically by the system.	**detail**
Program data+BSS memory	Program and base station subsystem (BSS) memory.	**detail**
Page data overhead	Internal memory overhead.	**detail**
Page directory size	Internal memory overhead.	**detail**
Total bytes in use	Total memory, in bytes, that is currently in use and percentage of available memory (in parentheses).	**detail**

Sample Output

show task memory

```
user@host> show task memory
Memory                  Size (kB)  Percentage  When
  Currently In Use:        29417          3%  now
  Maximum Ever Used:       33882          4%  00/02/11 22:07:03
  Available:              756281        100%  now
```

show task memory detail

```
user@host> show task memory detail
------------------------- Overall Memory Report -------------------------
  Size TP    Allocs   Mallocs  AllocBytes  MaxAllocs    MaxBytes  FreeBytes
     8            -       111         888        112         896       3208
    12           92       149        2892        247        2964       1204
    12 T          -         -           -          5          60          -
    16            7        11         288         23         368       3808
    20          100        33        2660        164        3280       1436
    20 T          -         -           -         40         800          -
    24          162        15        4248        177        4248       3944
    24 T          -         -           -          4          96          -
    28          371         -       10388        372       10416       1900
    32            6        23         928         30         960       3168
...
---------------------------------------------------------------------------
                                   606182                  715302     118810

  ------------------------ Allocator Memory Report ------------------------
  Name                 Size Alloc DTP    Alloc     Alloc MaxAlloc  MaxAlloc
                          Size       Blocks     Bytes   Blocks     Bytes
  patroot                 8    12           84      1008       87      1044
  sockaddr_un.i802        8    12            2        24        2        24
  cos_nhm_nh              8    12            1        12        1        12
  sockaddr_un.tag         8    12            3        36        4        48
  gw_entry_list           8    12            1        12        1        12
  bgp_riblist_01          8    12            1        12        2        24
  ospf_intf_ev            8    12            -         -        6        72
  krt_remnant_rt          8    12  T         -         -        5        60
...
  ---------------------------------------------------------------------------
                                                  164108             221552

  -------------------------- Malloc Usage Report --------------------------
  Name                       Allocs     Bytes MaxAllocs  MaxBytes  FuncCalls
  MGMT.local                      1         8         1         8          1
  BGP.0.0.0.0+179                 -         -         1         8          2
  BGP RT Background               4     74748         4     74748          4
  SNMP Subagent./var/run/         -        52         1      9172         56
  OSPFv2 I/O./var/run/ppm         1     66536         2     66552       4551
  OSPF                            6     67655         7     67703         68
  KRT                             -         -         1      3784         18
  ASPaths                         3        80         3        80          3
  -- sockaddr --                183      2100       184      2108       1645
  BFD I/O./var/run/bfdd_c         1     65535         2     65551       4555
  RT                             48       872        48       872         48
  Scheduler                      42       628        43       628         88
  --Anonymous--                  56      1100        58      1140        112
  --System--                     82     58364       114     60044       4654
  ---------------------------------------------------------------------------
                                        337678                352398
```

```
Dynamically allocated memory:     765952      Maximum:    765952
     Program data+BSS memory:    1568768      Maximum:   1568768
          Page data overhead:      53248      Maximum:     53248
         Page directory size:       4096      Maximum:      4096
                              ----------
           Total bytes in use:    2392064 (0% of available memory)
```

show task replication

Syntax **show task replication**

Release Information Command introduced in Junos OS Release 8.5.
Command introduced in Junos OS Release 9.0 for EX Series switches.

Description Displays nonstop active routing (NSR) status. When you issue this command on the master Routing Engine, the status of nonstop active routing synchronization is also displayed.

Options This command has no options.

Required Privilege Level view

List of Sample Output show task replication (Issued on the Master Routing Engine) on page 408
show task replication (Issued on the Backup Routing Engine) on page 408

Output Fields Table 19 on page 407 lists the output fields for the **show task replication** command. Output fields are listed in the approximate order in which they appear.

Table 19: show task replication Output Fields

Field Name	Field Description
Stateful replication	Displays whether or not graceful Routing Engine switchover is configured. The status can be **Enabled** or **Disabled**.
RE mode	Displays the Routing Engine on which the command is issued: **Master**, **Backup**, or **Not applicable** (when the router has only one Routing Engine).
Protocol	Protocols that are supported by nonstop active routing.
Synchronization Status	Nonstop active routing synchronization status for the supported protocols. States are **NotStarted**, **InProgress**, and **Complete**.

Sample Output

show task replication (Issued on the Master Routing Engine)

```
user@host> show task replication
         Stateful Replication: Enabled
         RE mode: Master

     Protocol                Synchronization Status
     OSPF                    NotStarted
     BGP                     Complete
     IS-IS                   NotStarted
     LDP                     Complete
     PIM                     Complete
```

show task replication (Issued on the Backup Routing Engine)

```
user@host> show task replication
         Stateful Replication: Enabled
         RE mode: Backup
```

show version

Syntax

show version
<brief | detail>

Syntax (EX Series Switches)

show version
<all-members>
<brief | detail>
<local>
<member *member-id*>

Syntax (TX Matrix Router)

show version
<brief | detail>
<all-chassis | all-lcc | lcc *number* | scc>

Syntax (TX Matrix Plus Router)

show version
<all-chassis | all-lcc | lcc *number* | sfc *number*>
<brief | detail>

Syntax (MX Series Router)

show version
<brief | detail>
<all-members>
<local>
<member *member-id*>

Syntax (QFX Series)

show version
<brief | detail>
<component *component-name* | all>

Release Information

Command introduced before Junos OS Release 7.4.
Command introduced in Junos OS Release 9.0 for EX Series switches.
sfc option introduced for the TX Matrix Plus router in Junos OS Release 9.6.
Command introduced in Junos OS Release 11.1 for the QFX Series.

Description

Display the hostname and version information about the software running on the router or switch.

Options

none—Display standard information about the hostname and version of the software running on the router or switch.

brief | detail—(Optional) Display the specified level of output.

all-members—(EX4200 switches and MX Series routers only) (Optional) Display standard information about the hostname and version of the software running on all members of the Virtual Chassis configuration.

component all—(QFabric systems only) (Optional) Display the host name and version information about the software running on all the components on the QFabric system.

component *component-name*—(QFabric systems only) (Optional) Display the host name and version information about the software running on a specific QFabric system component. Replace *component-name* with the name of the QFabric system

component. The *component-name* can be the name of a diagnostics Routing Engine, Director group, fabric control Routing Engine, fabric manager Routing Engine, Interconnect device, or Node group.

local—(EX4200 switches and MX Series routers only) (Optional) Display standard information about the hostname and version of the software running on the local Virtual Chassis member.

member ***member-id***—(EX4200 switches and MX Series routers only) (Optional) Display standard information about the hostname and version of the software running on the specified member of the Virtual Chassis configuration. For EX4200 switches, replace ***member-id*** with a value from 0 through 9. For an MX Series Virtual Chassis, replace ***member-id*** with a value of 0 or 1.

scc—(TX Matrix routers only) (Optional) Display the hostname and version information about the software running on the TX Matrix router (or switch-card chassis).

sfc ***number***—(TX Matrix Plus routers only) (Optional) Display the hostname and version information about the software running on the TX Matrix Plus router (or switch-fabric chassis). Replace *number* with 0.

Additional Information

By default, when you issue the **show version** command on a TX Matrix or TX Matrix Plus master Routing Engine, the command is broadcast to all the T640 (in a routing matrix based on a TX Matrix router) or T1600 (in a routing matrix based on a TX Matrix Plus router) master Routing Engines connected to it. Likewise, if you issue the same command on the TX Matrix or TX Matrix Plus backup Routing Engine, the command is broadcast to all the T640 (in a routing matrix based on a TX Matrix router) or T1600 (in a routing matrix based on a TX Matrix Plus router) backup Routing Engines that are connected to it.

Required Privilege Level

view

List of Sample Output

show version on page 411
show version (TX Matrix Plus Router) on page 412
show version (MX Series Router) on page 414
show version (QFX3500 Switch) on page 414
show version (QFabric System) on page 415
show version component all (QFabric System) on page 415

Sample Output

show version

```
user@host> show version
Hostname: router1
Model: m20
JUNOS Base OS boot [7.2-20050312.0]
JUNOS Base OS Software Suite [7.2-20050312.0]
JUNOS Kernel Software Suite [7.2R1.7]
JUNOS Packet Forwarding Engine Support (M20/M40) [7.2R1.7]
JUNOS Routing Software Suite [7.2R1.7]
JUNOS Online Documentation [7.2R1.7]
JUNOS Crypto Software Suite [7.2R1.7]

{master}
```

```
user@host> show version psd 1
psd1-re0:
--------------------------------------------------------------------------
Hostname: china
Model: t640
JUNOS Base OS boot [9.1I20080311_1959_builder]
JUNOS Base OS Software Suite [9.1-20080321.0]
JUNOS Kernel Software Suite [9.1-20080321.0]
JUNOS Crypto Software Suite [9.1-20080321.0]
JUNOS Packet Forwarding Engine Support (M/T Common) [9.1-20080321.0]
JUNOS Packet Forwarding Engine Support (T-series) [9.1-20080321.0]
JUNOS Online Documentation [9.1-20080321.0]
JUNOS Routing Software Suite [9.1-20080321.0]
labpkg [7.0]
```

show version (TX Matrix Plus Router)

```
user@host> show version
sfc0-re0:
--------------------------------------------------------------------------
Hostname: host
Model: txp
JUNOS Base OS boot [12.3-20121019.0]
JUNOS Base OS Software Suite [12.3-20121019.0]
JUNOS Kernel Software Suite [12.3-20121019.0]
JUNOS Crypto Software Suite [12.3-20121019.0]
JUNOS Packet Forwarding Engine Support (M/T Common) [12.3-20121019.0]
JUNOS Packet Forwarding Engine Support (T-Series) [12.3-20121019.0]
JUNOS Online Documentation [12.3-20121019.0]
JUNOS Services AACL Container package [12.3-20121019.0]
JUNOS Services Application Level Gateways [12.3-20121019.0]
JUNOS AppId Services [12.3-20121019.0]
JUNOS Border Gateway Function package [12.3-20121019.0]
JUNOS Services Captive Portal and Content Delivery Container package
[12.3-20121019.0]
JUNOS Services HTTP Content Management package [12.3-20121019.0]
JUNOS IDP Services [12.3-20121019.0]
JUNOS Services LL-PDF Container package [12.3-20121019.0]
JUNOS Services NAT [12.3-20121019.0]
JUNOS Services PTSP Container package [12.3-20121019.0]
JUNOS Services RPM [12.3-20121019.0]
JUNOS Services Stateful Firewall [12.3-20121019.0]
JUNOS Voice Services Container package [12.3-20121019.0]
JUNOS Services Example Container package [12.3-20121019.0]
JUNOS Services Crypto [12.3-20121019.0]
JUNOS Services SSL [12.3-20121019.0]
JUNOS Services IPSec [12.3-20121019.0]
JUNOS Runtime Software Suite [12.3-20121019.0]
JUNOS Routing Software Suite [12.3-20121019.0]

lcc0-re0:
--------------------------------------------------------------------------
Hostname: host1
Model: t1600
JUNOS Base OS boot [12.3-20121019.0]
JUNOS Base OS Software Suite [12.3-20121019.0]
JUNOS Kernel Software Suite [12.3-20121019.0]
JUNOS Crypto Software Suite [12.3-20121019.0]
JUNOS Packet Forwarding Engine Support (M/T Common) [12.3-20121019.0]
JUNOS Packet Forwarding Engine Support (T-Series) [12.3-20121019.0]
JUNOS Online Documentation [12.3-20121019.0]
JUNOS Services AACL Container package [12.3-20121019.0]
JUNOS Services Application Level Gateways [12.3-20121019.0]
JUNOS AppId Services [12.3-20121019.0]
JUNOS Border Gateway Function package [12.3-20121019.0]
JUNOS Services Captive Portal and Content Delivery Container package
[12.3-20121019.0]
JUNOS Services HTTP Content Management package [12.3-20121019.0]
JUNOS IDP Services [12.3-20121019.0]
JUNOS Services LL-PDF Container package [12.3-20121019.0]
JUNOS Services NAT [12.3-20121019.0]
JUNOS Services PTSP Container package [12.3-20121019.0]
JUNOS Services RPM [12.3-20121019.0]
JUNOS Services Stateful Firewall [12.3-20121019.0]
JUNOS Voice Services Container package [12.3-20121019.0]
JUNOS Services Example Container package [12.3-20121019.0]
JUNOS Services Crypto [12.3-20121019.0]
JUNOS Services SSL [12.3-20121019.0]
```

```
JUNOS Services IPSec [12.3-20121019.0]
JUNOS Runtime Software Suite [12.3-20121019.0]
JUNOS Routing Software Suite [12.3-20121019.0]

lcc1-re0:
--------------------------------------------------------------------------
Hostname: host2
Model: t1600
JUNOS Base OS boot [12.3-20121019.0]
JUNOS Base OS Software Suite [12.3-20121019.0]
JUNOS Kernel Software Suite [12.3-20121019.0]
JUNOS Crypto Software Suite [12.3-20121019.0]
JUNOS Packet Forwarding Engine Support (M/T Common) [12.3-20121019.0]
JUNOS Packet Forwarding Engine Support (T-Series) [12.3-20121019.0]
JUNOS Online Documentation [12.3-20121019.0]
JUNOS Services AACL Container package [12.3-20121019.0]
JUNOS Services Application Level Gateways [12.3-20121019.0]
JUNOS AppId Services [12.3-20121019.0]
JUNOS Border Gateway Function package [12.3-20121019.0]
JUNOS Services Captive Portal and Content Delivery Container package
[12.3-20121019.0]
JUNOS Services HTTP Content Management package [12.3-20121019.0]
JUNOS IDP Services [12.3-20121019.0]
JUNOS Services LL-PDF Container package [12.3-20121019.0]
JUNOS Services NAT [12.3-20121019.0]
JUNOS Services PTSP Container package [12.3-20121019.0]
JUNOS Services RPM [12.3-20121019.0]
JUNOS Services Stateful Firewall [12.3-20121019.0]
JUNOS Voice Services Container package [12.3-20121019.0]
JUNOS Services Example Container package [12.3-20121019.0]
JUNOS Services Crypto [12.3-20121019.0]
JUNOS Services SSL [12.3-20121019.0]
JUNOS Services IPSec [12.3-20121019.0]
JUNOS Runtime Software Suite [12.3-20121019.0]
JUNOS Routing Software Suite [12.3-20121019.0]

lcc2-re0:
--------------------------------------------------------------------------
Hostname: host3
Model: t1600
JUNOS Base OS boot [12.3-20121019.0]
JUNOS Base OS Software Suite [12.3-20121019.0]
JUNOS Kernel Software Suite [12.3-20121019.0]
JUNOS Crypto Software Suite [12.3-20121019.0]
JUNOS Packet Forwarding Engine Support (M/T Common) [12.3-20121019.0]
JUNOS Packet Forwarding Engine Support (T-Series) [12.3-20121019.0]
JUNOS Online Documentation [12.3-20121019.0]
JUNOS Services AACL Container package [12.3-20121019.0]
JUNOS Services Application Level Gateways [12.3-20121019.0]
JUNOS AppId Services [12.3-20121019.0]
JUNOS Border Gateway Function package [12.3-20121019.0]
JUNOS Services Captive Portal and Content Delivery Container package
[12.3-20121019.0]
JUNOS Services HTTP Content Management package [12.3-20121019.0]
JUNOS IDP Services [12.3-20121019.0]
JUNOS Services LL-PDF Container package [12.3-20121019.0]
JUNOS Services NAT [12.3-20121019.0]
JUNOS Services PTSP Container package [12.3-20121019.0]
JUNOS Services RPM [12.3-20121019.0]
JUNOS Services Stateful Firewall [12.3-20121019.0]
JUNOS Voice Services Container package [12.3-20121019.0]
```

```
JUNOS Services Example Container package [12.3-20121019.0]
JUNOS Services Crypto [12.3-20121019.0]
JUNOS Services SSL [12.3-20121019.0]
JUNOS Services IPSec [12.3-20121019.0]
JUNOS Runtime Software Suite [12.3-20121019.0]
JUNOS Routing Software Suite [12.3-20121019.0]

lcc3-re0:
--------------------------------------------------------------------------
Hostname: host4
Model: t1600
JUNOS Base OS boot [12.3-20121019.0]
JUNOS Base OS Software Suite [12.3-20121019.0]
JUNOS Kernel Software Suite [12.3-20121019.0]
JUNOS Crypto Software Suite [12.3-20121019.0]
JUNOS Packet Forwarding Engine Support (M/T Common) [12.3-20121019.0]
JUNOS Packet Forwarding Engine Support (T-Series) [12.3-20121019.0]
JUNOS Online Documentation [12.3-20121019.0]
JUNOS Services AACL Container package [12.3-20121019.0]
JUNOS Services Application Level Gateways [12.3-20121019.0]
JUNOS AppId Services [12.3-20121019.0]
JUNOS Border Gateway Function package [12.3-20121019.0]
JUNOS Services Captive Portal and Content Delivery Container package
[12.3-20121019.0]
JUNOS Services HTTP Content Management package [12.3-20121019.0]
JUNOS IDP Services [12.3-20121019.0]
JUNOS Services LL-PDF Container package [12.3-20121019.0]
JUNOS Services NAT [12.3-20121019.0]
JUNOS Services PTSP Container package [12.3-20121019.0]
JUNOS Services RPM [12.3-20121019.0]
JUNOS Services Stateful Firewall [12.3-20121019.0]
JUNOS Voice Services Container package [12.3-20121019.0]
JUNOS Services Example Container package [12.3-20121019.0]
JUNOS Services Crypto [12.3-20121019.0]
JUNOS Services SSL [12.3-20121019.0]
JUNOS Services IPSec [12.3-20121019.0]
JUNOS Runtime Software Suite [12.3-20121019.0]
JUNOS Routing Software Suite [12.3-20121019.0]
```

show version (MX Series Router)

```
user@host5> show version
Hostname: host5
Model: mx80
JUNOS Base OS boot [11.3-20110717.0]
JUNOS Base OS Software Suite [11.3-20110717.0]
JUNOS Kernel Software Suite [11.3-20110717.0]
JUNOS Crypto Software Suite [11.3-20110717.0]
JUNOS Packet Forwarding Engine Support (MX80) [11.3-20110717.0]
JUNOS Online Documentation [11.3-20110717.0]
JUNOS Routing Software Suite [11.3-20110717.0]
```

show version (QFX3500 Switch)

```
user@switch> show version
Hostname: switch
Model: qfx_s3500
JUNOS Base OS boot [11.1R1]
JUNOS Base OS Software Suite [11.1R1]
JUNOS Kernel Software Suite [11.1R1]
JUNOS Crypto Software Suite [11.1R1
JUNOS Online Documentation [11.1R1]
JUNOS Enterprise Software Suite [11.1R1]
JUNOS Packet Forwarding Engine Support (QFX) [11.1R1]
```

```
JUNOS Routing Software Suite [11.1R1]
```

show version (QFabric System)

```
user@qfabric> show version
Hostname: qfabric
Model: qfx3000-g
Serial Number: qfsn-0123456789
QFabric System ID: f158527a-f99e-11e0-9fbd-00e081c57cda
JUNOS Base Version [12.2I20111018_0215_dc-builder]
```

show version component all (QFabric System)

```
user@switch> show version component all
dg1:
-
Hostname: qfabric
Model: qfx3100
JUNOS Base Version [11.3R1.6]

dg0:
-
Hostname: qfabric
Model: qfx3100
JUNOS Base Version [11.3R1.6]

NW-NG-0:
-
Hostname: qfabric
Model: qfx-jvre
JUNOS Base OS boot [11.3R1.6]
JUNOS Base OS Software Suite [11.3R1.6]
JUNOS Kernel Software Suite [11.3R1.6]
JUNOS Crypto Software Suite [11.3R1.6]
JUNOS Online Documentation [11.3R1.6]
JUNOS Enterprise Software Suite [11.3R1.6]
JUNOS Packet Forwarding Engine Support (QFX RE) [11.3R1.6]
JUNOS Routing Software Suite [11.3R1.6]

FC-0:
-
Hostname: qfabric
Model: qfx-jvre
JUNOS Base OS boot [11.3R1.6]
JUNOS Base OS Software Suite [11.3R1.6]
JUNOS Kernel Software Suite [11.3R1.6]
JUNOS Crypto Software Suite [11.3R1.6]
JUNOS Online Documentation [11.3R1.6]
JUNOS Enterprise Software Suite [11.3R1.6]
JUNOS Packet Forwarding Engine Support (QFX RE) [11.3R1.6]
JUNOS Routing Software Suite [11.3R1.6]

FC-1:
Hostname: qfabric
Model: qfx-jvre
JUNOS Base OS boot [11.3R1.6]
JUNOS Base OS Software Suite [11.3R1.6]
JUNOS Kernel Software Suite [11.3R1.6]
JUNOS Crypto Software Suite [11.3R1.6]
JUNOS Online Documentation [11.3R1.6]
JUNOS Enterprise Software Suite [11.3R1.6]
JUNOS Packet Forwarding Engine Support (QFX RE) [11.3R1.6]
JUNOS Routing Software Suite [11.3R1.6]
```

```
DRE-0:
-
Hostname: dre-0
Model: qfx-jvre
JUNOS Base OS boot [11.3R1.6]
JUNOS Base OS Software Suite [11.3R1.6]
JUNOS Kernel Software Suite [11.3R1.6]
JUNOS Crypto Software Suite [11.3R1.6]
JUNOS Online Documentation [11.3R1.6]
JUNOS Enterprise Software Suite [11.3R1.6]
JUNOS Packet Forwarding Engine Support (QFX RE) [11.3R1.6]
JUNOS Routing Software Suite [11.3R1.6]

FM-0:
-
Hostname: qfabric
Model: qfx-jvre
JUNOS Base OS boot [11.3R1.6]
JUNOS Base OS Software Suite [11.3R1.6]
JUNOS Kernel Software Suite [11.3R1.6]
JUNOS Crypto Software Suite [11.3R1.6]
JUNOS Online Documentation [11.3R1.6]
JUNOS Enterprise Software Suite [11.3R1.6]
JUNOS Packet Forwarding Engine Support (QFX RE) [11.3R1.6]
JUNOS Routing Software Suite [11.3R1.6]

nodedevice1:
-
Hostname: qfabric
Model: QFX3500
JUNOS Base OS boot [11.3R1.6]
JUNOS Base OS Software Suite [11.3R1.6]
JUNOS Kernel Software Suite [11.3R1.6]
JUNOS Crypto Software Suite [11.3R1.6]
JUNOS Online Documentation [11.3R1.6]
JUNOS Enterprise Software Suite [11.3R1.6]
JUNOS Packet Forwarding Engine Support (QFX RE) [11.3R1.6]
JUNOS Routing Software Suite [11.3R1.6]

interconnectdevice1:
-
Hostname: qfabric
Model: QFX3108
JUNOS Base OS boot [11.3R1.6]
JUNOS Base OS Software Suite [11.3R1.6]
JUNOS Kernel Software Suite [11.3R1.6]
JUNOS Crypto Software Suite [11.3R1.6]
JUNOS Online Documentation [11.3R1.6]
JUNOS Enterprise Software Suite [11.3R1.6]
JUNOS Packet Forwarding Engine Support (QFX RE) [11.3R1.6]
JUNOS Routing Software Suite [11.3R1.6]
warning:  from interconnectdevice0: Disconnected
```

start shell

Syntax

start shell (csh | sh)
<user *username*>

Release Information

Command introduced before Junos OS Release 7.4.
Command introduced in Junos OS Release 9.0 for EX Series switches.
Command introduced in Junos OS Release 11.1 for the QFX Series.

Description

Exit from the CLI environment and create a UNIX-level shell. To return to the CLI, type **exit** from the shell.

NOTE:

- To issue this command, the user must have the required login access privileges configured by including the **permissions** statement at the **[edit system login class *class-name*]** hierarchy level.
- UNIX wheel group membership or permissions are no longer required to issue this command.

Options

csh—Create a UNIX C shell.

sh—Create a UNIX Bourne shell.

user *username*—(Optional) Start the shell as another user.

Additional Information

When you are in the shell, the shell prompt has the following format:

username@hostname%

An example of the prompt is:

root@host%

Required Privilege Level

shell and maintenance

List of Sample Output

start shell csh on page 418

Output Fields

When you enter this command, you are provided feedback on the status of your request.

Sample Output

start shell csh

```
user@host> start shell csh
%

exit
%

username@hostname% start shell sh
%

exit
user@host>
```

test configuration

Syntax test configuration *filename*

Release Information Command introduced before Junos OS Release 7.4.
Command introduced in Junos OS Release 9.0 for EX Series switches.
Command introduced in Junos OS Release 11.1 for the QFX Series.

Description Verify that the syntax of a configuration file is correct. If the configuration contains any syntax or commit check errors, a message is displayed to indicate the line number and column number in which the error was found.

Options ***filename***—Name of the configuration file.

syntax-only—Check the syntax of a partial configuration file, without checking for commit errors. This option introduced in Junos OS Release 12.1.

Required Privilege Level view

List of Sample Output test configuration on page 419

Output Fields When you enter this command, you are provided feedback on the status of your request.

Sample Output

test configuration

```
user@host> test configuration terminal
[Type ^D to end input]
system {
host-name bluesky;
paris-23;
login;
}
terminal:3:(8) syntax error: paris
  [edit system]
    'paris-23;'
      syntax error
terminal:4:(11) statement must contain additional statements: ;
  [edit system login]
    'login ;'
      statement must contain additional statements
configuration syntax failed
```

PART 4

Index

Index

Symbols

A

B

C

D

K

L

M

N

P

Q

R

S

T

U

V

W